Drying Tumblers

25 Pound Capacity
30 Pound Capacity
35 Pound Capacity

Models Through Serial No. 0602004143

Refer to Page 5 for Model Numbers

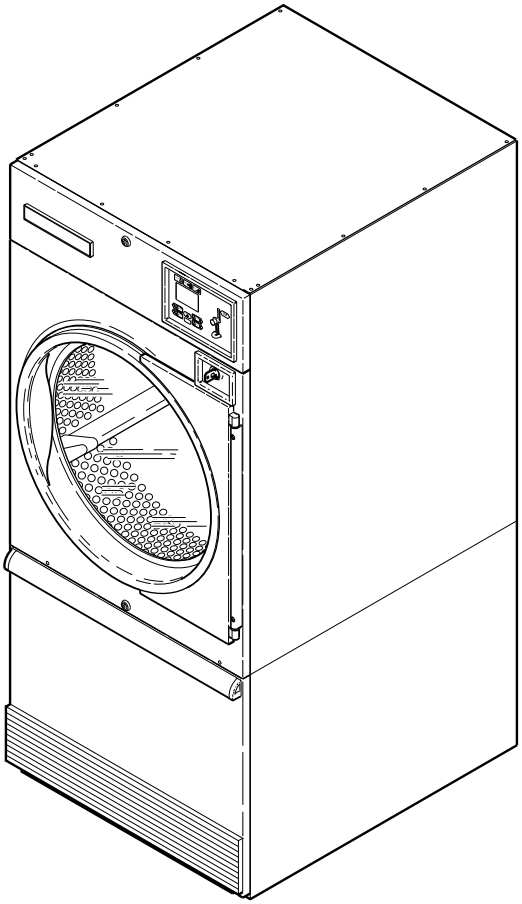

T463P_70275601

Parts

Alliance™ Laundry Systems

www.alliancelaundry.com

Part No. 70275601R24
June 2025

Table of Contents

Title	Page
Parts Ordering Information	3
Serial Plate Location	3
Model Identification	5
Electromechanical Coin Drop Components	6
Coin Meter	8
Manual Dual Timer Controls	10
DX4 Control Components	12
DMP Control	14
OPL Microprocessor Controls	16
Electronic Coin Drop Components for EDC Models	18
Card Reader Components for EDC Models	20
Coin Drop Components for MDC Models	22
Central Pay and Card Reader for MDC Models	24
BY Control Option for MDC Models	26
Coin Drops	28
Coin Drop Components for NetMaster Models	30
Card Reader for NetMaster Models	32
Network Board for NetMaster Models	34
Communication Board for NetMaster Models	36
Door and Hinge Components	38
Front Panel and False Front Assemblies	40
Cabinet Front Components (Drawing 1 of 2)	42
Cabinet Front Components (Drawing 2 of 2)	44
Emergency Stop Button for CE Models	46
Cylinder Components	48
Cabinet Components	50
Lower Cabinet Components	52
Lower Cabinet Components - 25 Pound Models with Hinged Lint Door	54
Drive Motor Components	56
Blower Components	58
Airflow Switch	60
Gas Burner Components	62
Secondary Stove Limit and Gas Burner Housing	64
Rotation Sensor	66
Gas Valve Assembly - Non-CE and Non-Australian Models	68
Gas Valve and Piping - CE and Australian Gas Models	70
Electric Heater Components	72
Steam Heater Components	74
Control Tray - Non-CE and Australian Gas Models	76
Control Tray - CE Gas Models	78
Control Tray - Non-CE Steam Models	80

© Copyright 2025, Alliance Laundry Systems LLC

All rights reserved. No part of the contents of this book may be reproduced or transmitted in any form or by any means without the expressed written consent of the publisher.

Control Tray - CE Steam Models 82
Control Tray - Non-CE Electric Models 84
Control Tray - CE Electric Models 86
Accessory Box - Non-CE Electric Models - 240 Volt and Lower 88
Accessory Box - Non-CE Electric Models - 380 Volt and Higher 90
Accessory Box - CE Electric Models - 240 Volt and Lower 92
Accessory Box - CE Electric Models - 380 Volt and Higher 94
Parts Index 97

© Copyright, Alliance Laundry Systems LLC – DO NOT COPY or TRANSMIT

Parts Ordering Information

If literature or replacement parts are required, contact the source from whom the machine was purchased or contact Alliance Laundry Systems at (920) 748-3950 for the name and address of the nearest authorized parts distributor.

For technical assistance, call the number listed below:

(920) 748-3121 Ripon, Wisconsin

Serial Plate Location

When calling or writing about your product, be sure to mention model and serial numbers. Model and serial numbers are located on serial plate as shown.

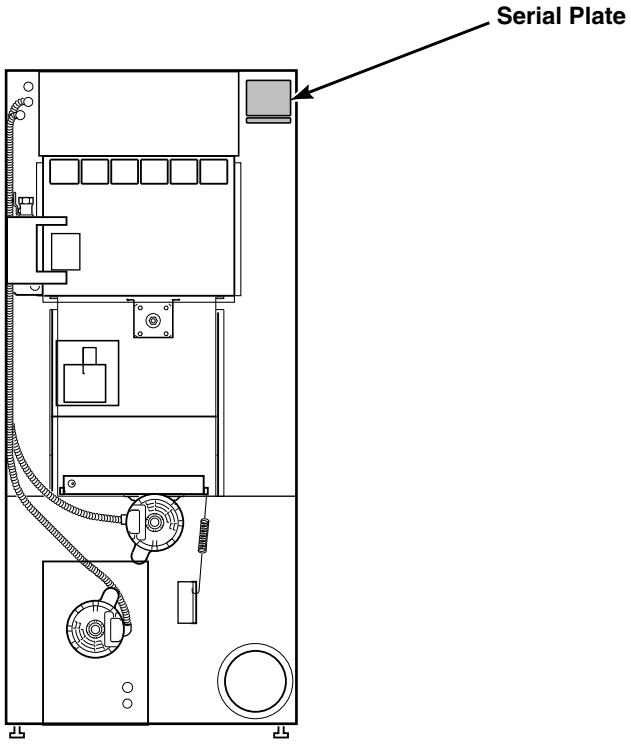

TMB2146P_70275601

© Copyright, Alliance Laundry Systems LLC – DO NOT COPY or TRANSMIT

Notes

© Copyright, Alliance Laundry Systems LLC – DO NOT COPY or TRANSMIT

Model Identification

Information in this manual is applicable to these tumbler models:

BA025L
BA025N
BA035L
BA035N
BT025E
BT025L
BT025N
BT025S
BT035E
BT035L
BT035N
BT035S
BU025E
BU025L
BU025N
BU025S
BU035E
BU035L
BU035N
BU035S

CA025L
CA025N
CA030L
CA030N
CA035L
CA035N
CT025E
CT025L
CT025N
CT025S
CT030E
CT030L
CT030N
CT030S
CT035E
CT035L
CT035N
CT035S
CU025E
CU025L
CU025N
CU025S
CU030E
CU030L
CU030N
CU030S
CU035E
CU035L
CU035N
CU035S

HA025L
HA025N
HA030L
HA030N
HA035L
HA035N
HT025E
HT025L
HT025N
HT025S
HT030D
HT030E
HT030L
HT030N
HT030S
HT035E
HT035L
HT035N
HT035S
HU025E
HU025L
HU025N
HU025S
HU030E
HU030L
HU030N
HU030S
HU035E
HU035L
HU035N
HU035S

IT025E
IT025L
IT025N
IT025S
IT030E
IT030L
IT030N
IT030S
IT035E
IT035L
IT035N
IT035S
LT025L
LT025N
LT030L
LT030N
LT035L
LT035N
LU030E
LU030L
LU030N
LU035E
LU035L
LU035N

PA025L
PA025N
PA030L
PA030N
PA035L
PA035N
PT025E
PT025L
PT025N
PT025S
PT030E
PT030L
PT030N
PT030S
PT035E
PT035L
PT035N
PT035S
PU025E
PU025L
PU025N
PU025S
PU030E
PU030L
PU030N
PU030S
PU035E
PU035L
PU035N
PU035S
SA025L
SA025N
SA030L
SA030N
SA035L
SA035N

ST025E
ST025L
ST025N
ST025S
ST030E
ST030L
ST030N
ST030S
ST035E
ST035L
ST035N
ST035S
SU025E
SU025L
SU025N
SU025S
SU030E
SU030L
SU030N
SU030S
SU035E
SU035L
SU035N
SU035S
UA025L
UA025N
UA030L
UA030N
UA035L
UA035N
UT025E
UT025L
UT025N
UT025S

UT030E
UT030L
UT030N
UT030S
UT035E
UT035L
UT035N
UT035S
UU025E
UU025L
UU025N
UU025S
UU030E
UU030L
UU030N
UU030S
UU035E
UU035L
UU035N
UU035S
YT025E
YT025L
YT025N
YT025S
YT030E
YT030L
YT030N
YT030S
YT035E
YT035L
YT035N
YT035S
YU035E
YU035S

Control Suffixes:

3O – DX4 OPL
3V – DX4 vended
3X – DX4 prep for coin
BC – basic electronic, coin
BL – basic electronic, central pay
BU – basic electronic, prep card - open
BX – basic electronic, prep for coin
BY – basic electronic, prep for card
CD – rotary coin drop
DO – DMP OPL
DV – DMP vended
DX – DMP prep for coin
EC – electronic coin
EP – electronic card reader
EX – coin ready
EY – card ready
MT – manual timer
NC – NetMaster coin
NR – NetMaster card
NX – NetMaster, prep for coin
NY – NetMaster, prep for card
OM – OPL micro
ZC – NetMaster network coin
ZR – NetMaster network card
ZX – NetMaster network, prep for coin
ZY – NetMaster network, prep for card

© Copyright, Alliance Laundry Systems LLC – DO NOT COPY or TRANSMIT

Electromechanical Coin Drop Components

C, H, I, P and S Models with CD Control Suffix

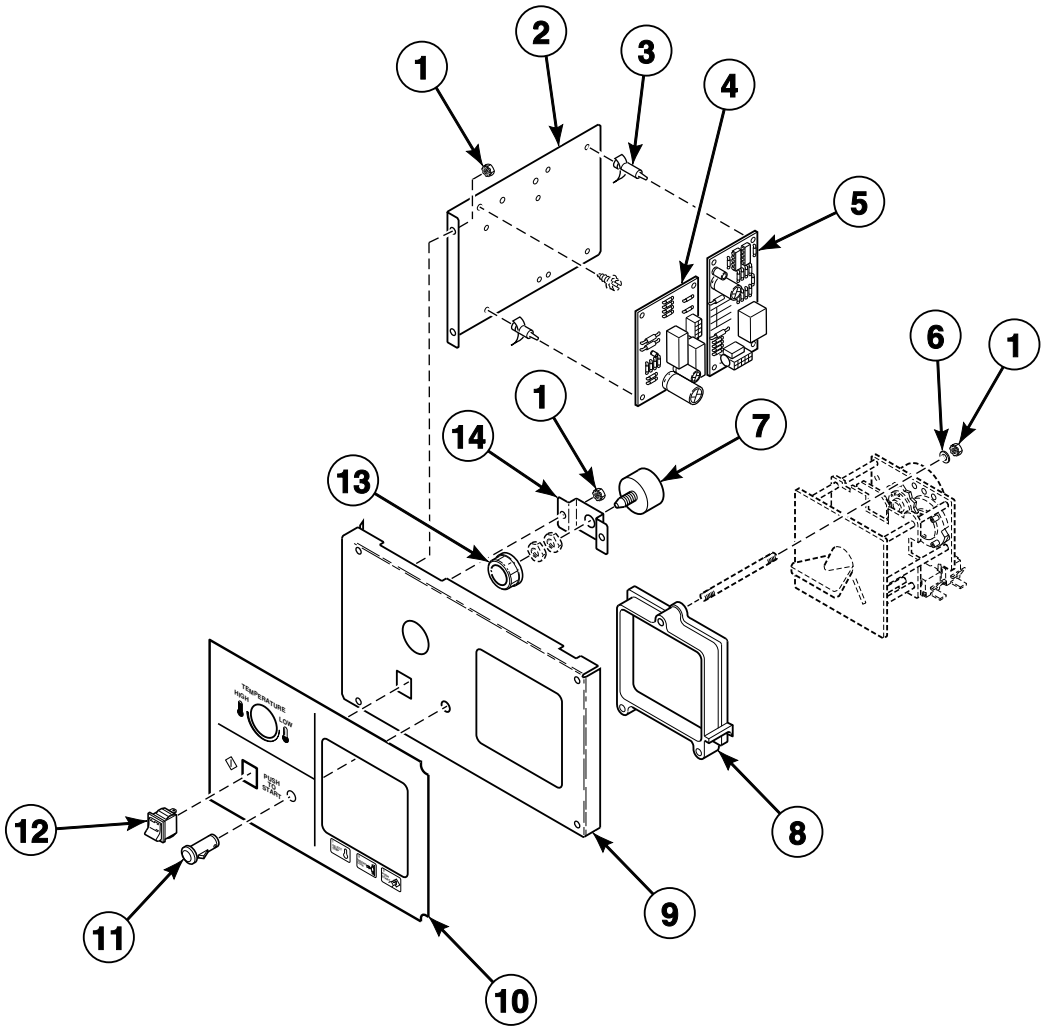

TMB2147P_70275601

© Copyright, Alliance Laundry Systems LLC – DO NOT COPY or TRANSMIT

Electromechanical Coin Drop Components

REF	PART NO.	DESCRIPTION	COMMENTS
	M400972	Shadow Box Clip	For trim pieces
	M4688P3	Rotary Coin Drop Control Kit	Does not include overlay, temperature knob or harness
	70179801	Control Panel Harness	Non-CE and non-Australian models
	70084101	Jumper Configuration Assembly	25 and 30 pound models
	70084102	Jumper Configuration Assembly	35 pound models
1	70054	Nut	
2	70178901	Mounting Bracket	
3	34896	Circuit Board Support	
4	70175301P	Timer Control Assembly	
5	431347P	Thermostat Module	
6	M405535	Washer	For coin drop mounting
7	70475001P	Temperature Kit	Potentiometer
8	70061701	Rotary Drop Shroud	
9	70175804	Control Plate Assembly	Includes studs
10	70113501	Overlay	C, I, P and S models; English
	70114301	Overlay	H models; English
	70131001	Overlay	C, I, P and S models; Icon
	70134801	Overlay	H models; Icon
11	70082201	Indicator Light	
12	70108501	Start Switch	
13	44020501	Knob	C, I, P and S models; Temperature
	N/A	Temperature Knob	H models
14	70080701	Mounting Bracket	

N/A = Part no longer available

© Copyright, Alliance Laundry Systems LLC – DO NOT COPY or TRANSMIT

Coin Meter

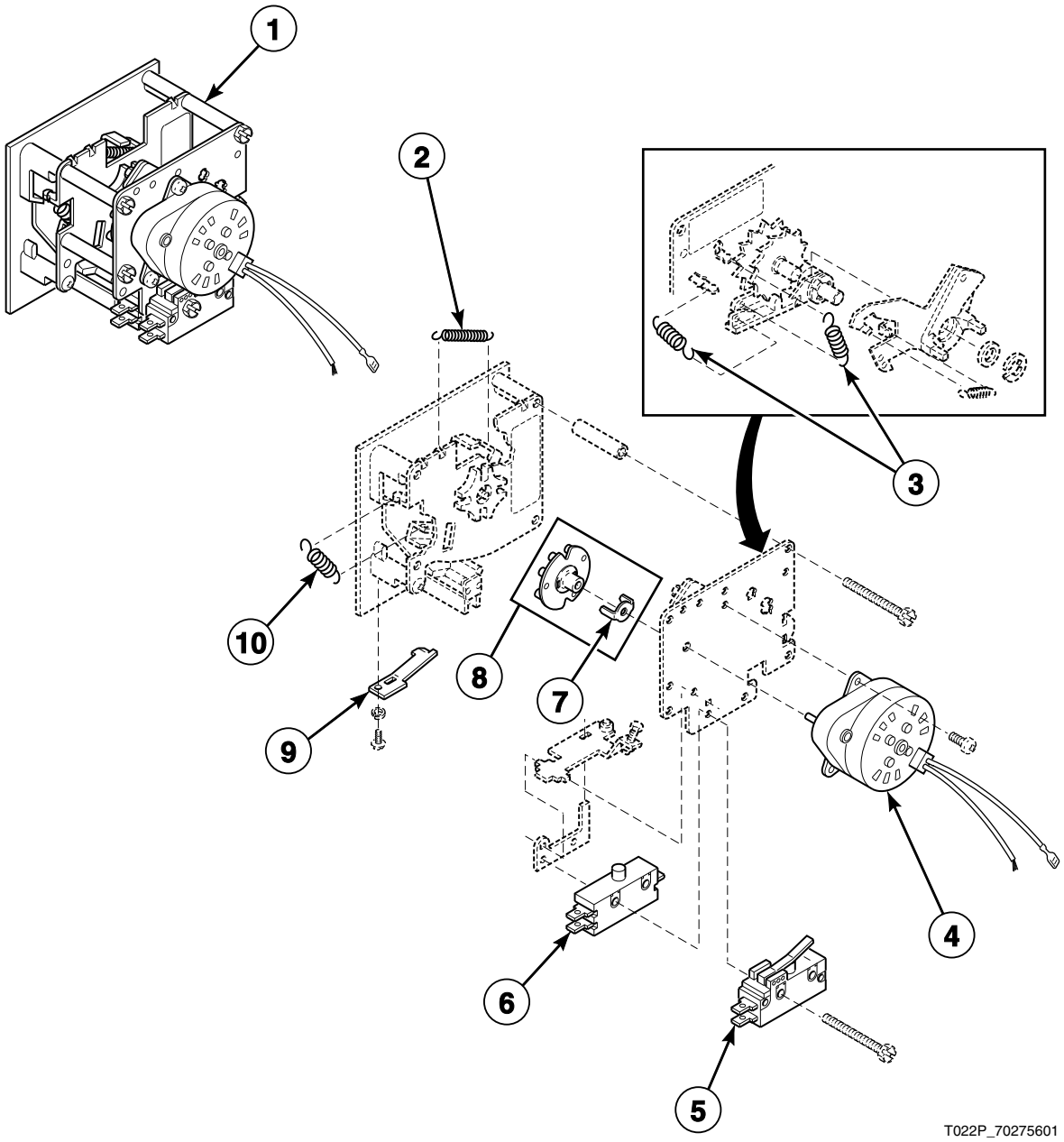

© Copyright, Alliance Laundry Systems LLC – DO NOT COPY or TRANSMIT

Coin Meter

REF	PART NO.	DESCRIPTION	COMMENTS
1	N/A	Coin Meter	Australia; .20/5 minutes
	70112501P	Coin Meter	Australia; 1.00/15 minutes
	70112701P	Coin Meter	US; $.25/10 minutes
	70137301P	Coin Meter	Token; Standard 118-1; 60 Hertz; 10 minutes
	70137401P	Coin Meter	Token; Standard 118-5; 60 Hertz; 10 minutes
	70151301	Coin Meter	South Africa; .20/10 minutes
	N/A	Coin Meter	England; 20 pence/7.5 minutes
	N/A	Coin Meter	Denmark; 1 krone/5 minutes
	M412546	Coin Meter	Token; Standard 118-1; 50 Hertz; 10 minutes
	N/A	Coin Meter	Token; Standard 118-5/10; 50 Hertz; 10 minutes
	70262401	Coin Meter	Euro; .20/5 minutes
	N/A	Coin Meter	Euro; .50/10 minutes
2	M405138B	Return Spring	
3	M402455	Coil Spring	
4	70218201	Timer Motor	60 Hertz; 1 revolution/hour
	70218301	Timer Motor	50 Hertz; 2 revolution/hour
5	M400947	Switch	Heat; Switch “B”
6	N/A	Single Throw Switch	Run; Switch “A”
7	M400754	Coin Meter Drive	
8	M400732P	Timing Cam	10 pin; 6 minutes for 60 Hertz; 3 minutes for 50 Hertz
	M400733P	Timing Cam	12 pin; 5 minutes for 60 Hertz; 2.5 minutes for 50 Hertz
	M400734P	Timing Cam	2 pin; 30 minutes for 60 Hertz; 15 minutes for 50 Hertz
	M400735P	Timing Cam	3 pin; 20 minutes for 60 Hertz; 10 minutes for 50 Hertz
	M400736P	Timing Cam	4 pin; 15 minutes for 60 Hertz; 7.5 minutes for 50 Hertz
	M400737P	Timing Cam	5 pin; 12 minutes for 60 Hertz; 6 minutes for 50 Hertz
	M400738P	Timing Cam	6 pin; 10 minutes for 60 Hertz; 5 minutes for 50 Hertz
	M400739P	Timing Cam	7 pin; 8.5 minutes for 60 Hertz; 4.25 minutes for 50 Hertz
	M400740P	Timing Cam	8 pin; 7.5 minutes for 60 Hertz; 3.75 minutes for 50 Hertz
	M400741P	Timing Cam	9 pin; 6.6 minutes for 60 Hertz; 3.3 minutes for 50 Hertz
9	M406297	Coin Retainer Spring	
10	M405138A	Coin Carrier Spring	

N/A = Part no longer available

© Copyright, Alliance Laundry Systems LLC – DO NOT COPY or TRANSMIT

Manual Dual Timer Controls

C, H, I, P, S, U and YT Models with MT Control Suffix

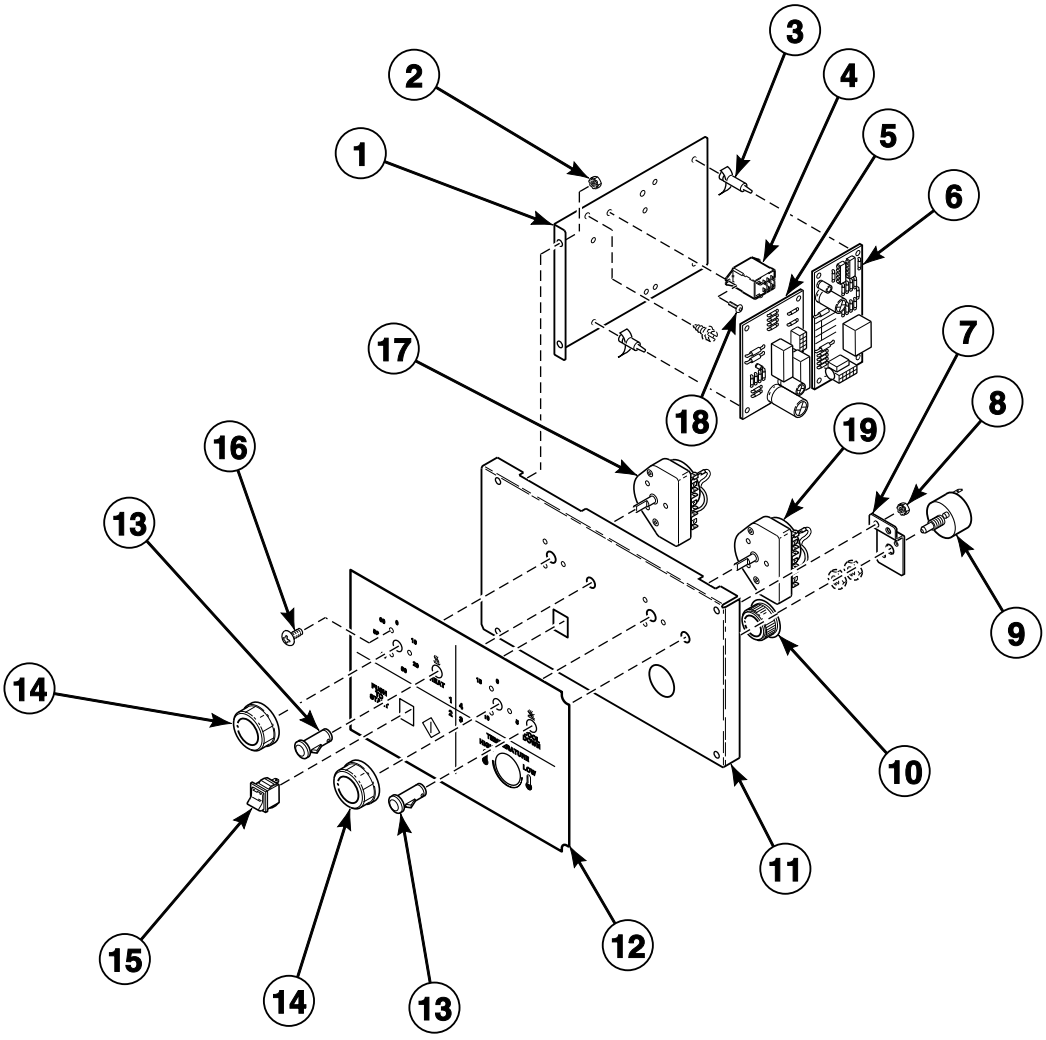

T142K_70275601

© Copyright, Alliance Laundry Systems LLC – DO NOT COPY or TRANSMIT

Manual Dual Timer Controls

REF	PART NO.	DESCRIPTION	COMMENTS
	M4690P3	Manual Timer Control Kit	Does not include overlay, temperature knob or harness
	70179901P	Control Panel Harness	
	70084101	Jumper Configuration Assembly	25 and 30 pound models
	70084102	Jumper Configuration Assembly	35 pound models
1	70178901	Mounting Bracket	
2	70054	Nut	
3	34896	Circuit Board Support	
4	M412534	Relay	24 Volt/50 or 60 Hertz
5	70175301P	Timer Control Assembly	
6	431347P	Thermostat Module	
7	70080701	Mounting Bracket	
8	M400977	Nut	
9	70475001P	Temperature Kit	Potentiometer
10	N/A	Temperature Knob	H models
	44020501	Knob	All other models; Temperature
11	70175803	Control Plate Assembly	Includes studs
12	70114501	Overlay	C, I, S, U and Y models; English
	70134901	Overlay	C, I, S and U models; Icon
	70114201	Overlay	H models; English
	70245901	Overlay	P models; Icon
	N/A	Overlay	H models; Icon
13	70082201	Indicator Light	Heat and cooling
14	M410927	Knob	H models; Timer
	70082101	Timer Knob	All other models
15	70108501	Start Switch	
16	44041301	Screw	
17	70131701P	Timer	Heat; 60 minute
	N/A	Timer	Heat; 24 Volt/50 Hertz; 60 minute
18	M402797	Screw	
19	70131801P	Timer	Cooling; 15 minute
	M412079P	Timer	Cooling; 24 Volt/50 Hertz; 15 minute

N/A = Part no longer available

© Copyright, Alliance Laundry Systems LLC – DO NOT COPY or TRANSMIT

DX4 Control Components

B and I Models with 3O, 3V and 3X Control Suffixes

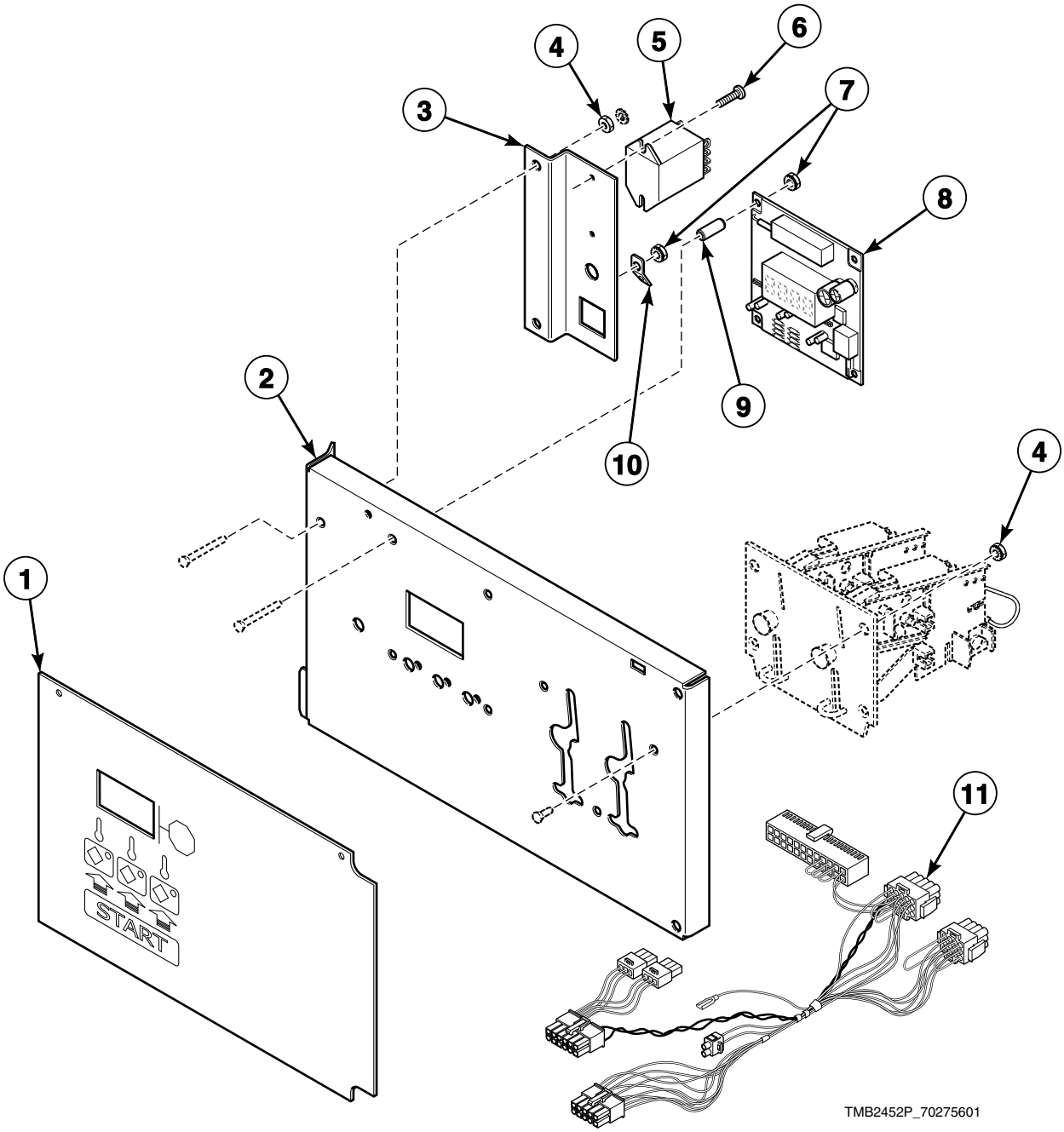

© Copyright, Alliance Laundry Systems LLC – DO NOT COPY or TRANSMIT

DX4 Control Components

REF	PART NO.	DESCRIPTION	COMMENTS
1	44050502	Graphic Overlay	Coin; Dual drop
	44050501	Graphic Overlay	Coin; Single drop
	44240501	Graphic Overlay	OPL
2	44050701P	Control Plate Kit	Includes studs
3	44041701	Relay/Buzzer Bracket	25 and 35 pound CE models
4	29786	Nut	25 and 35 pound CE models
5	M412534	Relay	25 and 35 pound CE models
6	M402797	Screw	25 and 35 pound CE models
7	29787	Nut	25 and 35 pound CE models
8	70462361P	Control Assembly	
9	44050601	Sleeve	4 required
10	00177	Male Tab Terminal	
11	70279801	Control Panel Harness	Non-CE and non-Australian models; Models through July 2005
	70280901	Control Panel Harness Assembly	CE and Australian models; Models through July 2005
	70364701P	Control Panel Harness	Non-CE and non-Australian models; Models starting July 2005
	70364801P	Control Panel Harness Assembly	CE and Australian models; Models starting July 2005

© Copyright, Alliance Laundry Systems LLC – DO NOT COPY or TRANSMIT

DMP Control

C and I Models with DO, DV and DX Control Suffixes

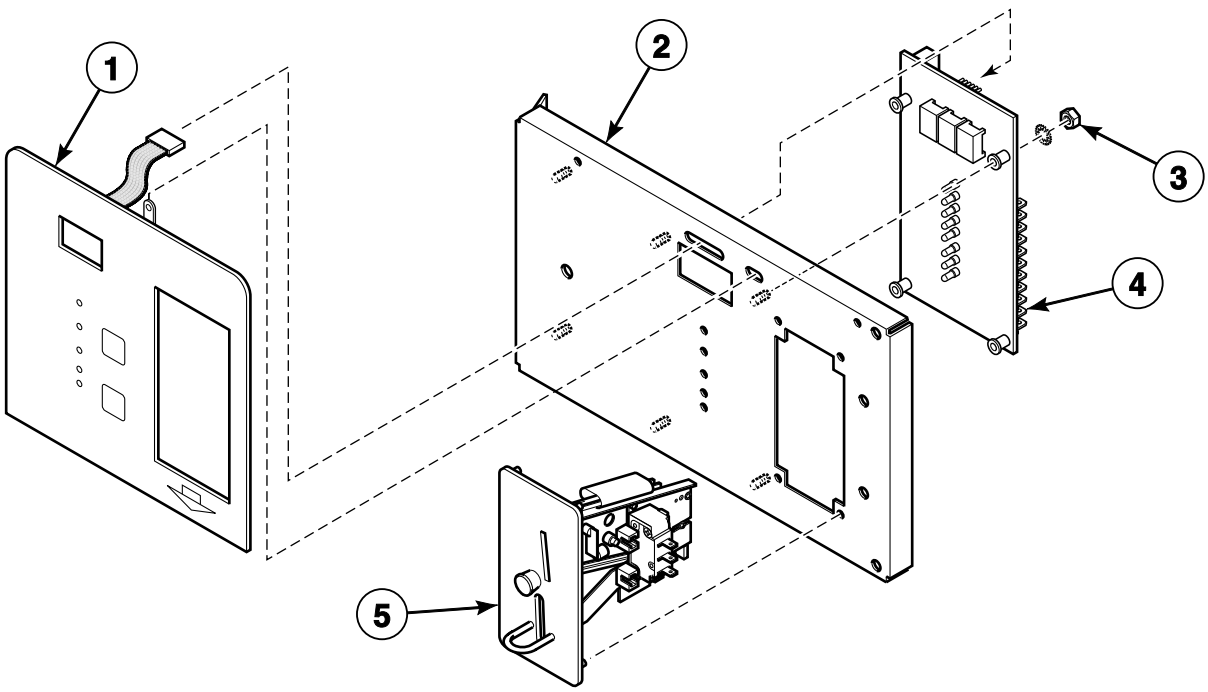

Coin

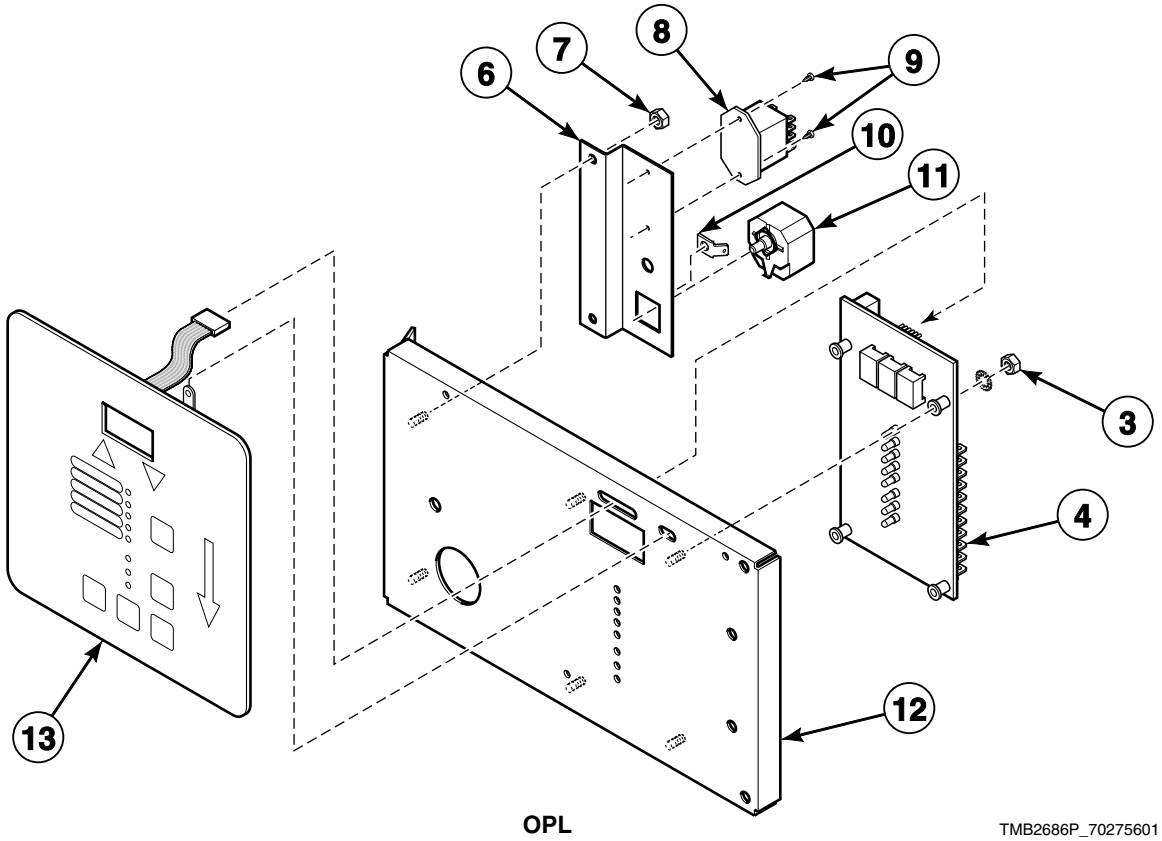

OPL

TMB2686P_70275601

© Copyright, Alliance Laundry Systems LLC – DO NOT COPY or TRANSMIT

DMP Control

REF	PART NO.	DESCRIPTION	COMMENTS
	70271401	Control Panel Harness	CE and Australian models; Coin
	70271501	Control Panel Harness	CE and Australian models; OPL
	44042701	Jumper Set Assembly	Coin
	44042801	Jumper Set Assembly	OPL; Models with buzzer
1	44039402P	Membrane Switch	Coin
2	44041001	Control Plate Assembly	Coin; Includes studs
3	29787	Nut	
4	44037801P	Electronic Control	
5	44039701P	Coin Drop Assembly	United States; $.25
	44039702	Coin Drop Assembly	Mexico; 2 peso
	44039703	Coin Drop Assembly	Token; .880
	44039704	Coin Drop Assembly	Japan; 100 yen
	44039705	Coin Drop Assembly	England; 20 pence
	44039706	Coin Drop Assembly	Token; .800
	44039707	Coin Drop Assembly	England; 50 pence
6	44041701	Relay/Buzzer Bracket	
7	70054	Nut	
8	M412534	Relay	
9	M402797	Screw	
10	00177	Male Tab Terminal	
11	D505447	Adjustable Buzzer	
12	44040901	Control Plate Assembly	OPL; Includes studs
13	44037901P	Membrane Switch	OPL

© Copyright, Alliance Laundry Systems LLC – DO NOT COPY or TRANSMIT

OPL Microprocessor Controls

H, L, P, S, U and YU Models with OM Control Suffix

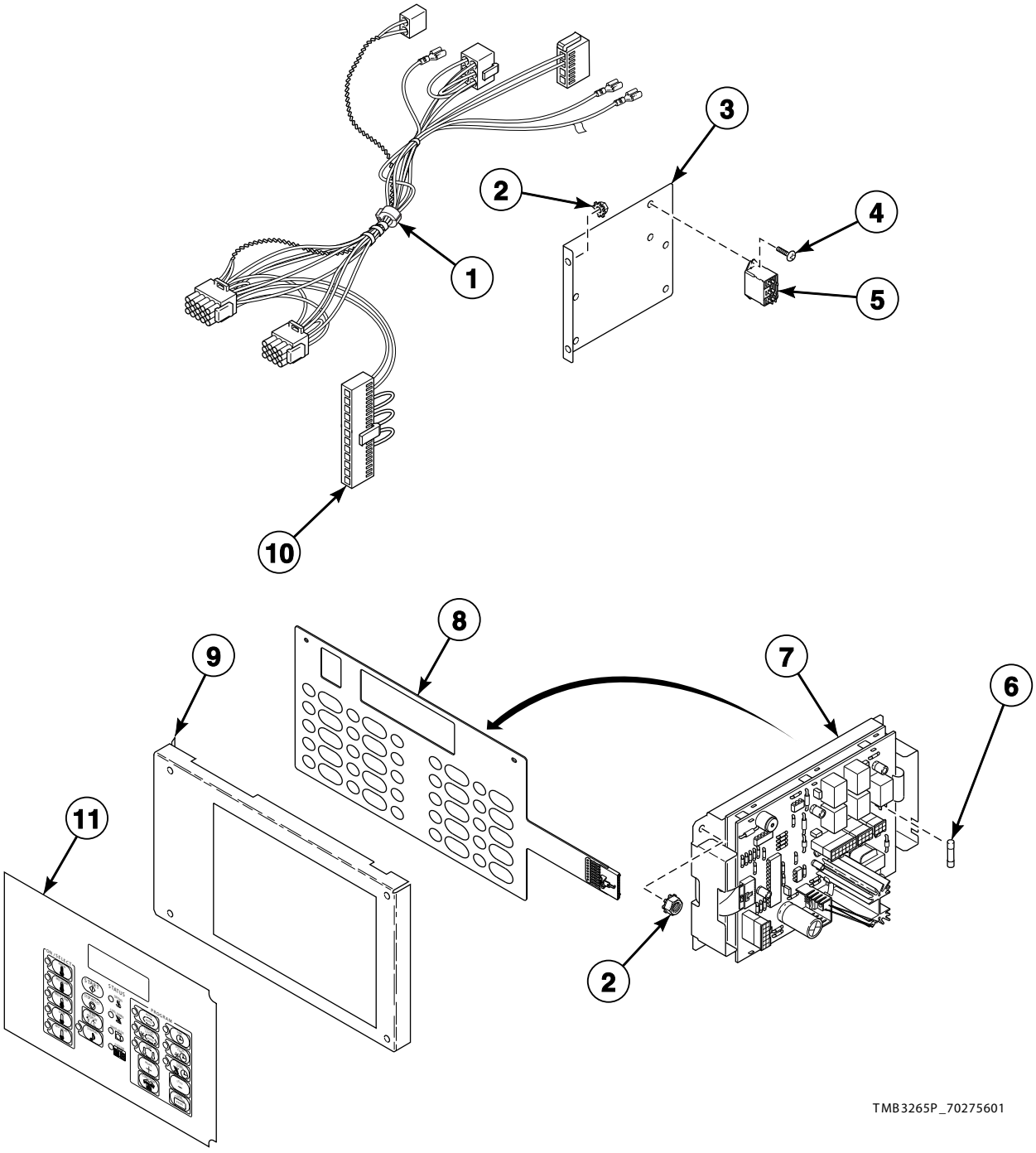

© Copyright, Alliance Laundry Systems LLC – DO NOT COPY or TRANSMIT

OPL Microprocessor Controls

REF	PART NO.	DESCRIPTION	COMMENTS
	M4689P3	Electronic OPL Control Kit	HT, LT, PT, ST and UT models; Dual secondary transformers (M414228 Transformer for 100-240 VAC and M414229 Transformer for 380-480 VAC) must be used with this kit; Does not include overlay or harness
	M4695P3	Electronic OPL Control Kit	HA, HU, LU, PA, PU, SA, SU, UA, UU and YU models
	70084303	Jumper Calibration Assembly	25 and 30 pound models
	70084301	Jumper Calibration Assembly	35 pound models
1	M413930P	Ferrite Core Assembly	
2	70054	Nut	
3	70063501	Mounting Bracket	Used with 70382701P Control Panel Harness
4	M402797	Screw	2 required
5	M412534	Relay	
6	70406501	Fuse	1.25 Amp
7	70228401P	Control Kit	
8	M414368P	Membrane Switch	
9	70175805	Control Plate Assembly	HT, LT, PT, ST and UT models; Includes studs
	70175806	Control Plate Assembly	All other models; Includes studs
10	70082801P	Control Panel Harness Assembly	HT, LT, PT, ST and UT models
	70082901	Control Panel Harness Assembly	HA, HU, LU, PA, PU, SA, SU, UA, UU and YU models
11	70115801	Overlay	L, P, S, U and Y models; Icon and Text
	70130401	Overlay	L, P, S, U and Y models; Icon
	70128701	Overlay	H models; Text
	70130601	Overlay	H models; Icon

© Copyright, Alliance Laundry Systems LLC – DO NOT COPY or TRANSMIT

Electronic Coin Drop Components for EDC Models

H, L, P, S and U Models with EC and EX Control Suffixes

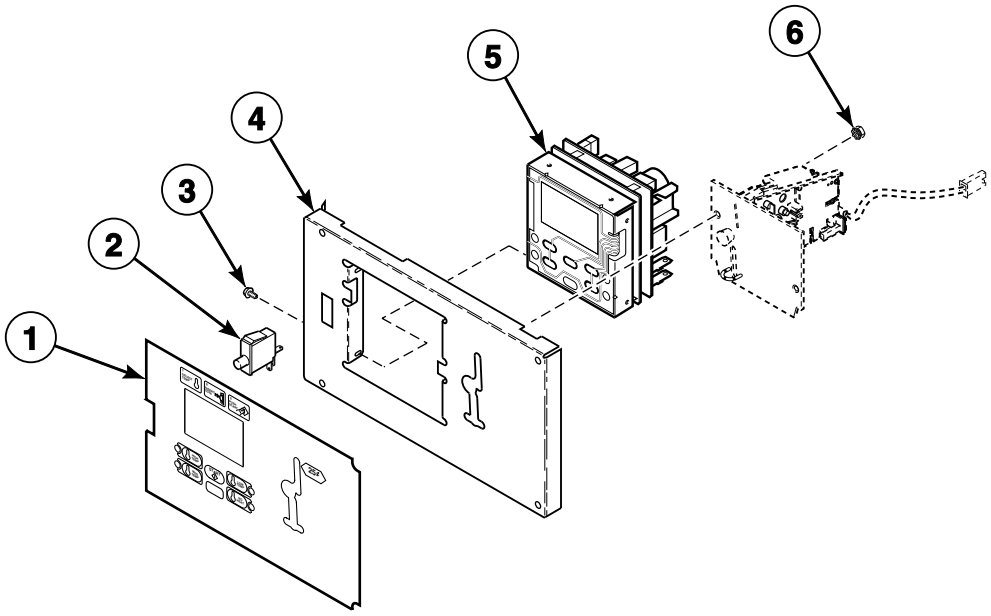

TMB2148P_70275601

© Copyright, Alliance Laundry Systems LLC – DO NOT COPY or TRANSMIT

Electronic Coin Drop Components for EDC Models

REF	PART NO.	DESCRIPTION	COMMENTS
	M4686P3	Electronic Coin Control Kit	HA, HT, LT, PA, PT, SA, ST, UA and UT models; Does not include overlay or harness
	431611	Multiplier Harness Assembly	Dual drop
	70055801P	Control Harness Assembly	HT, LT, PT, ST and UT models; Control panel to main harness
	70082701P	Control Panel Harness Assembly	HA, HU, LU, PA, PU, SA, SU, UA and UU models; Control panel to main harness
	70084201	Jumper Calibration Assembly	25 and 30 pound models
1	70113701	Overlay	S models; English
	70114101	Overlay	H models; English
	70173601	Overlay	H models without coin; Icon
	70128501	Overlay	HU models; English
	70128001	Overlay	S models; Icon
	70130101	Overlay	P models; Icon
	70130801	Overlay	H models; Icon
2	70413301	Pushbutton Switch	
3	D501524	Screw	For mounting EDC control
4	70175801	Control Plate Assembly	Includes studs
5	M414049P	Control Kit	Model and serial number of machine required - part no longer available for units built prior to 1/1/2004 per field bulletin FB15-164
6	70054	Nut	

© Copyright, Alliance Laundry Systems LLC – DO NOT COPY or TRANSMIT

Card Reader Components for EDC Models

H, L, P, S and U Models with EY Control Suffix

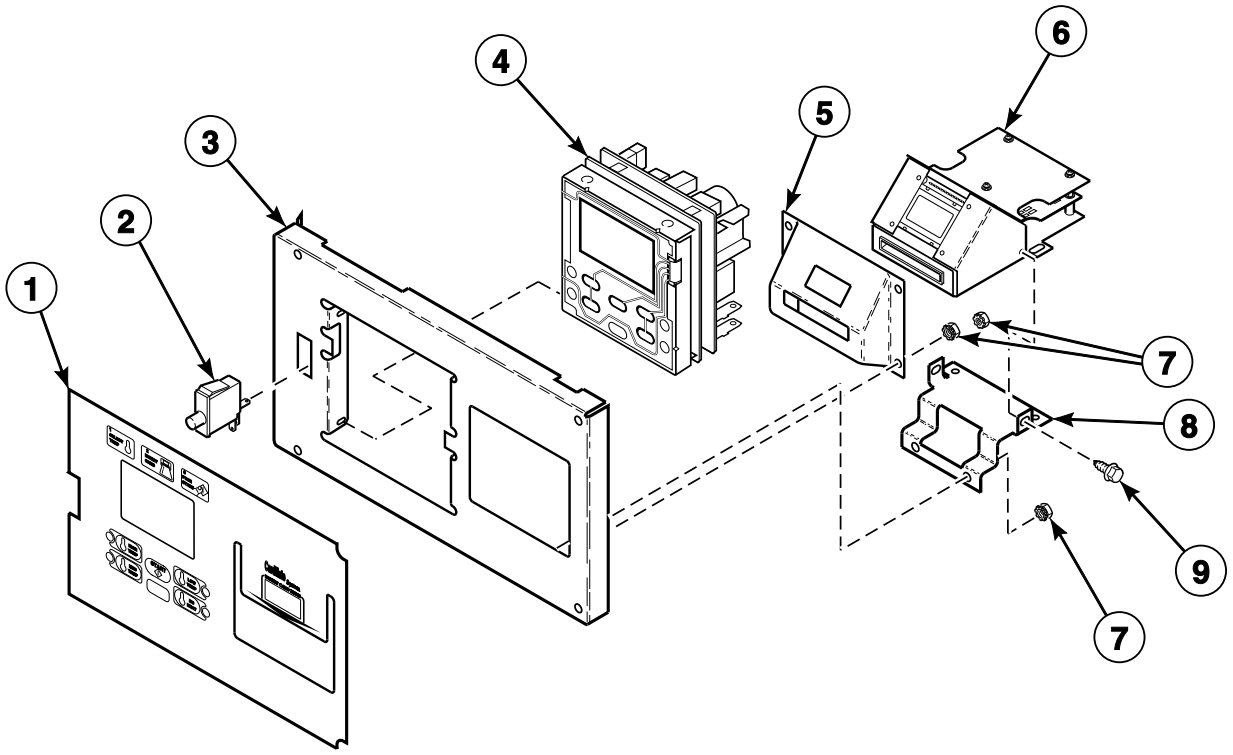

T444PZ3A_70275601

© Copyright, Alliance Laundry Systems LLC – DO NOT COPY or TRANSMIT

Card Reader Components for EDC Models

REF	PART NO.	DESCRIPTION	COMMENTS
	431613	Card Reader Harness Assembly	
	70055801P	Control Harness Assembly	HA, HT, LT, PA, PT, SA, ST, UA and UT models
	70082701P	Control Panel Harness Assembly	HU, LU, PU, SU and UU models
	70084201	Jumper Calibration Assembly	25 and 30 pound models
1	N/A	Overlay	ST models
	N/A	Overlay	HT models
2	70413301	Pushbutton Switch	
3	70175802	Control Plate Assembly	Includes studs
4	M414049P	Control Kit	
5	N/A	Card Reader Mounting Bracket	
6	39685P	Card Reader	
7	70054	Nut	
8	N/A	Chassis Mounting Bracket	
9	D501524	Screw	For mounting electronic control

N/A = Part no longer available

© Copyright, Alliance Laundry Systems LLC – DO NOT COPY or TRANSMIT

Coin Drop Components for MDC Models

H, L, P, S and U Models with BC and BX Control Suffixes

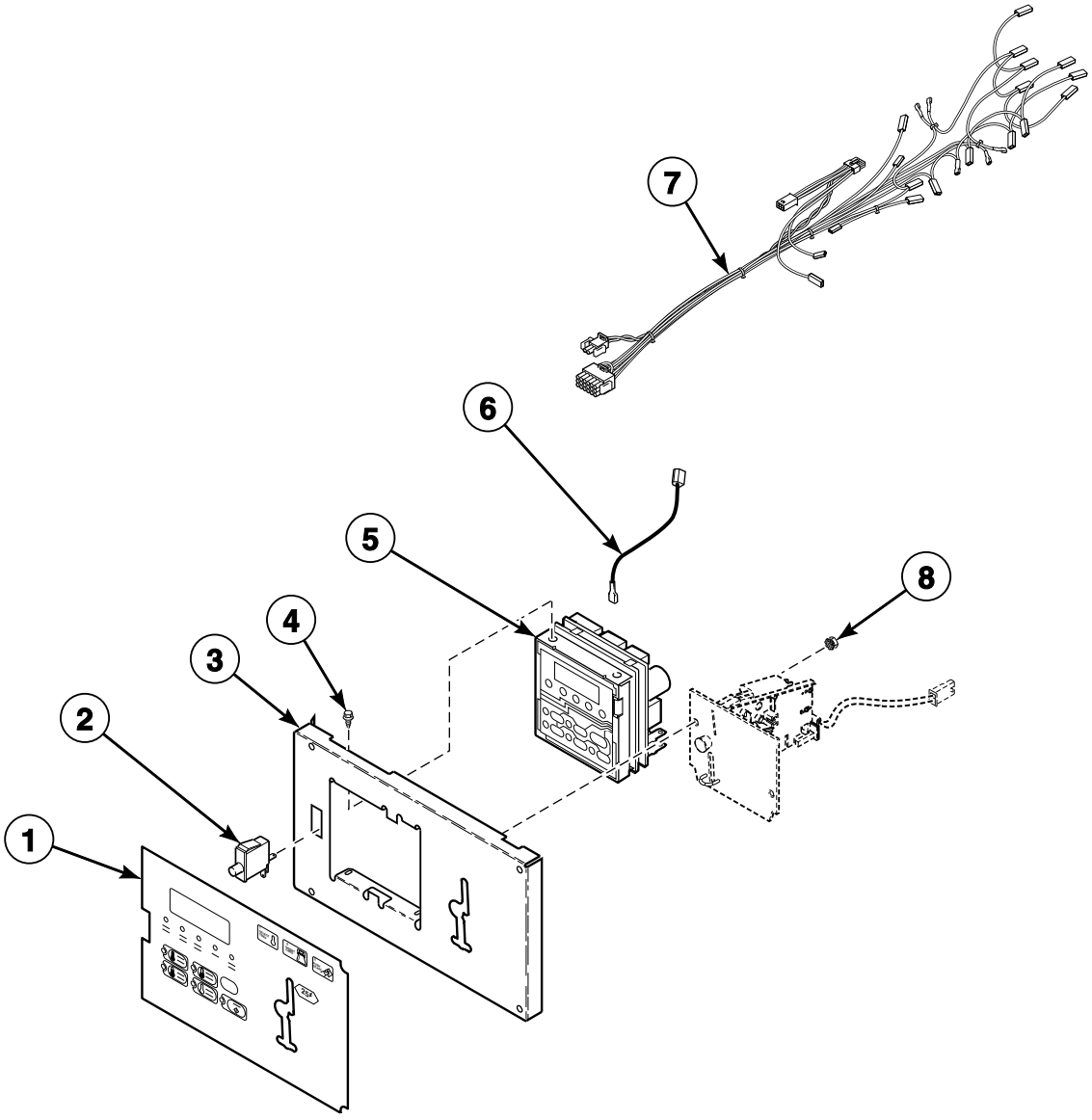

TMB2117P_70275601

© Copyright, Alliance Laundry Systems LLC – DO NOT COPY or TRANSMIT

Coin Drop Components for MDC Models

REF	PART NO.	DESCRIPTION	COMMENTS
	70406501	Fuse	Secondary; 1.25 Amp
	39564	Nameplate	S models with BL* control suffix; Cover
	70246301	Coin Cover Overlay	H models with BL* control suffix; Cover
	70286701	Overlay	P models with BL* control suffix; Cover
	70321001	Overlay	P models with BC** and BX** control suffixes
	70129501	Overlay	P models with BC** and BX** control suffixes; Single drop
	70129601	Overlay	P models with BC** and BX** control suffixes; Dual drop
	70211701	Jumper Calibration Assembly	25 and 30 pound models
	70211702	Jumper Calibration Assembly	35 pound models
	203346	USB IR Interface Kit	
1	70257701	Overlay	L and S models with BC, BL* and BX control suffixes; Text; Single drop
	70261001	Overlay	L and S models with BC, BL* and BX control suffixes; Icon; Single drop
	70257702	Overlay	L and S models with BC and BX control suffixes; Dual drop
	70261002	Overlay	L and S models with BC and BX control suffixes; Dual drop
	70258001	Overlay	H models with BC, BL* and BX control suffixes; Text; Single drop
	70261201	Overlay	H models with BC, BL* and BX control suffixes; Icon; Single drop
	70258002	Overlay	H models with BC and BX control suffixes; Dual drop
	70261202	Overlay	H models with BC and BX control suffixes; Icon; Dual drop
	70259001	Overlay	P models with BL control suffix
2	70413301	Pushbutton Switch	
3	70175807	Control Plate Assembly	
4	D501524	Screw	4 required for mounting control
5	D511867P	Control Assembly	
6	M412645	Jumper Wire Assembly	Ground wire
7	70206301P	Control Panel Harness Assembly	HT, LT, PT, ST and UT models; Control panel to main harness
	70235801	Control Panel Harness Assembly	HA, HU, LU, PA, PU, SA, SU, UA and UU models; Control panel to main harness
8	70054	Nut	3 required

*** NOTE: BL control suffix requires an overlay and overlay cover specific to model.**

**** NOTE: P models with BC or BX control suffixes require an overlay and coin drop overlay.**

© Copyright, Alliance Laundry Systems LLC – DO NOT COPY or TRANSMIT

Central Pay and Card Reader for MDC Models

H, L, P and S Models with BL, BU and BY Control Suffixes

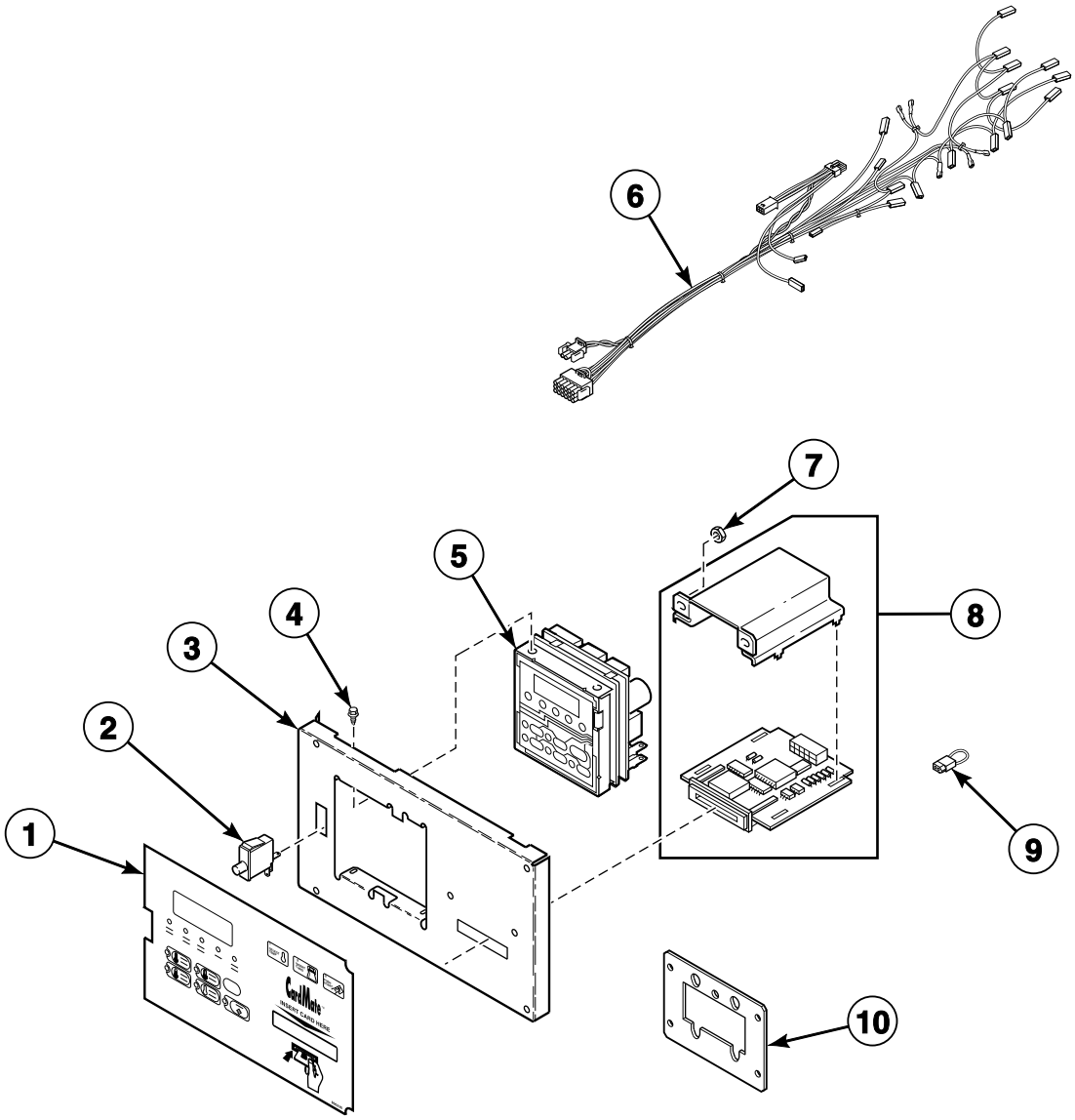

TMB2184P_70275601

© Copyright, Alliance Laundry Systems LLC – DO NOT COPY or TRANSMIT

Central Pay and Card Reader for MDC Models

REF	PART NO.	DESCRIPTION	COMMENTS
	70406501	Fuse	Secondary; 1.25 Amp
	70275401	Overlay	H models with BL control suffix; Cover
	70266801	Overlay	H models with BY control suffix; Text; Cover
	70258003	Overlay	H models with BU control suffix; Text; Cover
	70211701	Jumper Calibration Assembly	25 and 30 pound models
	70211702	Jumper Calibration Assembly	35 pound models
	203346	USB IR Interface Kit	
1	70266701	Overlay	L and S models with BY control suffix; Text
	N/A	Overlay	L and S models with BY control suffix; Icon
	70257703	Overlay	L and S models with BU control suffix; Text
	70261003	Overlay	L and S models with BU control suffix; Icon
2	70413301	Pushbutton Switch	
3	N/A	Control Plate Assembly	BY control suffix
	70497201	Control Plate Assembly	BU control suffix
	70291001P	Control Plate Kit	BL control suffix
4	D501524	Screw	
5	D511867P	Control Assembly	
6	70206301P	Control Panel Harness Assembly	HA, HT, LT, PA, PT, SA and ST models
	70235801	Control Panel Harness Assembly	HU, LU, PU and SU models
7	70054	Nut	
8	D510068P	Card Reader and Bracket Assembly	
9	70084001	Jumper Bypass Assembly	
10	70208801	Mounting Plate	BU control suffix

N/A = Part no longer available

© Copyright, Alliance Laundry Systems LLC – DO NOT COPY or TRANSMIT

BY Control Option for MDC Models

H, L, P and S Models

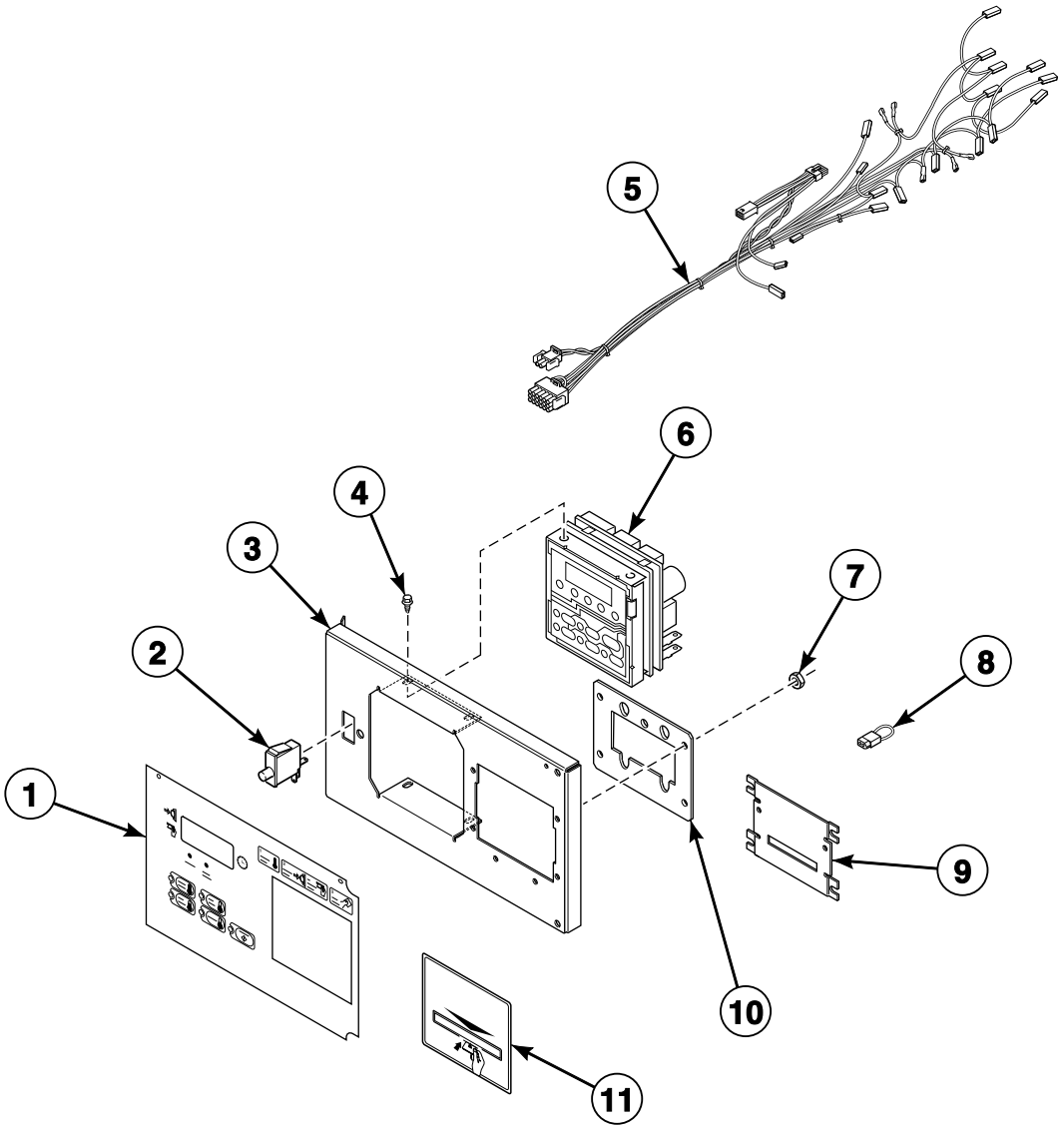

TMB2182P_70275601

© Copyright, Alliance Laundry Systems LLC – DO NOT COPY or TRANSMIT

BY Control Option for MDC Models

REF	PART NO.	DESCRIPTION	COMMENTS
	70406501	Fuse	Secondary; 1.25 Amp
	70211701	Jumper Calibration Assembly	25 and 30 pound models
	70211702	Jumper Calibration Assembly	35 pound models
	203346	USB IR Interface Kit	
1	70257703	Overlay	S models; Text or icon
	70258003	Overlay	H models; Text or icon
2	70413301	Pushbutton Switch	
3	70497201	Control Plate Assembly	
4	D501524	Screw	4 required
5	70206301P	Control Panel Harness Assembly	HA, HT, LT, PA, PT, SA and ST models
	70235801	Control Panel Harness Assembly	HU, LU, PU and SU models
6	D511867P	Control Assembly	
7	70054	Nut	
8	70084001	Jumper Bypass Assembly	
9	44089501	Slot Card Plate Assembly	Included in literature packet
10	70208801	Mounting Plate	
11	70334201	Card Reader Overlay	Black; Included in literature packet
	70334301	Card Reader Overlay	Gray; Included in literature packet

© Copyright, Alliance Laundry Systems LLC – DO NOT COPY or TRANSMIT

Coin Drops

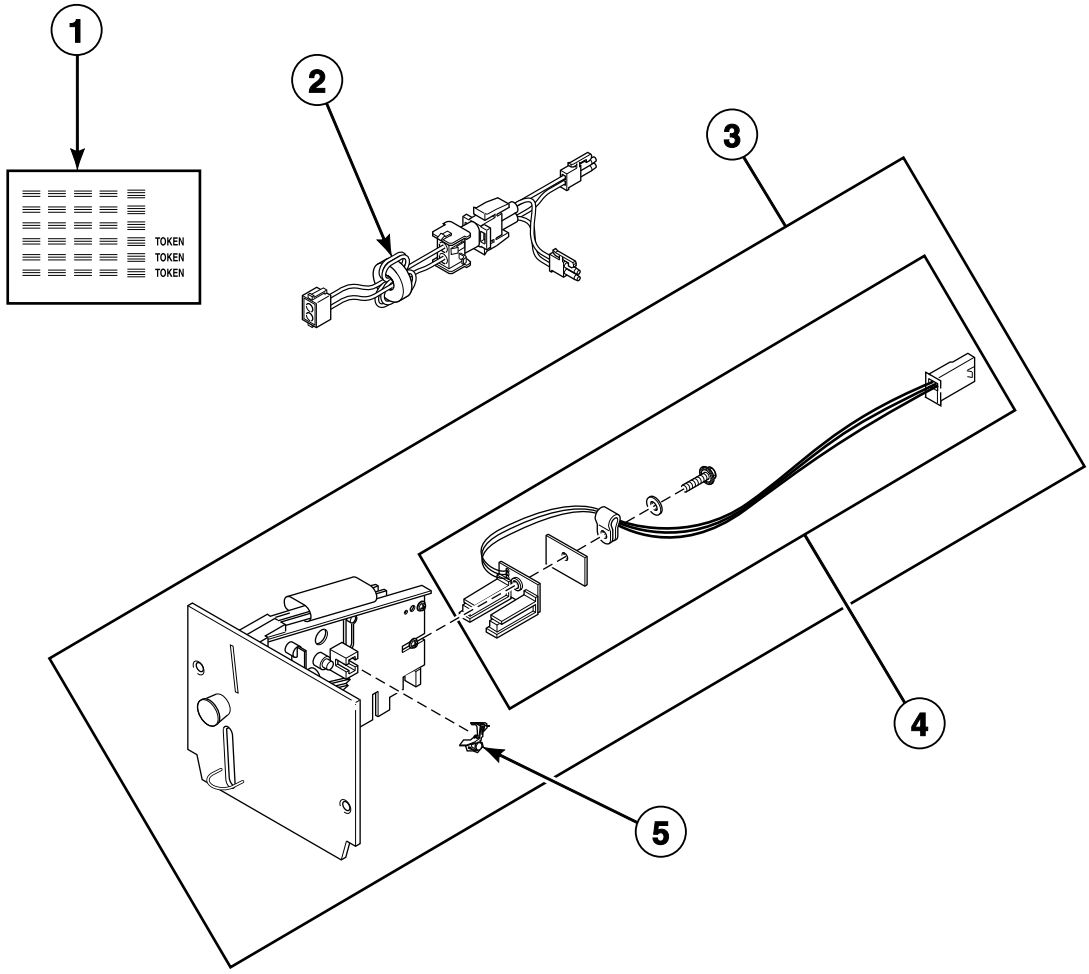

TMB2921P_70275601

© Copyright, Alliance Laundry Systems LLC – DO NOT COPY or TRANSMIT

Coin Drops

REF	PART NO.	DESCRIPTION	COMMENTS
	CK502	Electronic Coin Drop Kit	Includes 44065801 Electronic Coin Drop Harness and wiring diagram supplement
	CK115	Electronic Coin Drop Kit	United States and Canada; Also order CK502 Electronic Coin Drop Kit
	CK113	Electronic Coin Drop Kit	Japan and Taiwan; Also order CK502 Electronic Coin Drop Kit
	CK099	Electronic Coin Drop Kit	Australia (default), New Zealand, Hong Kong, South Korea and Malaysia; Also order CK502 Electronic Coin Drop Kit
	CK100	Electronic Coin Drop Kit	United Kingdom (default) and Europe; Also order CK502 Electronic Coin Drop Kit
	CK101	Electronic Coin Drop Kit	Europe (default), Denmark and Norway; Also order CK502 Electronic Coin Drop Kit
	CK103	Electronic Coin Drop Kit	Lithuania (default), Latvia and Europe; Also order CK502 Electronic Coin Drop Kit
	CK125	Electronic Coin Drop Kit	South Africa; Also order CK502 Electronic Coin Drop Kit
	CK109	Electronic Coin Drop Kit	Euro; Also order CK502 Electronic Coin Drop Kit
	CK116	Electronic Coin Drop Kit	Malaysia (default), China and Singapore; In addition to this kit, order CK502 Electronic Coin Drop Kit
	CK117	Electronic Coin Drop Kit	Russia
	CK118	Electronic Coin Drop Kit	Philippine
1	38725	Coin Identification Paper	
2	44065801	Electronic Coin Drop Harness	Included in CK502
3	70294103P	Electronic Coin Drop Assembly	United Kingdom (default) and Europe
	70294104	Electronic Coin Drop Assembly	Europe (default), Denmark and Norway
	70513306	Electronic Coin Drop Assembly	Mexico (default), Ecuador and United States
	70294107	Electronic Coin Drop Assembly	Lithuania (default), Latvia and Europe
	70513311	Electronic Coin Drop Assembly	Malaysia (default), China, Russia and Singapore
	70294110	Electronic Coin Drop Assembly	South Africa
	70441601P	Coin Drop	USA; $.25
	38475	Coin Drop Assembly	Japan; 100 yen
	38519	Coin Drop Assembly	Japan; 100 and 500 yen
	38467	Coin Drop Assembly	Australia; .20 and 1.00
	CK097	Coin Drop Kit	Token; Jeton
	210195	Coin Drop Assembly	Euro; .20 and 1.00
	70283102	Coin Drop Assembly	Europe; .20 euro and .50 euro
	210196	Coin Drop Assembly	Euro; .50 and 1.00
	70256402P	Coin Drop	USA; Dual; $.25 and $1.00
	38462P	Coin Drop Assembly	Token; STD-118-1
	38463	Coin Drop Assembly	Token, STD-118-5
	38464P	Coin Drop Assembly	Canada; .25
	70441602	Coin Drop Assembly	Canada; .25 and 1.00
	38472	Coin Drop Assembly	England; 20 pence and 1 pound
	N/A	Coin Drop Assembly	Denmark; 1 and 5 DKK; May replace with 70294104 Electronic Coin Drop Assembly
	38521	Coin Drop Assembly	Korea; 100 and 500 won
	N/A	Coin Drop Assembly	New Zealand; .20 and 100
	38963P	Coin Drop	Token STD-118-16 not available; Replacement for 38963P Coin Drop only
	N/A	Coin Drop Assembly	Taiwan; Dual; 5 and 10 NT; May replace with 70294101 Electronic Coin Drop Assembly
	39157	Coin Drop Assembly	Israel; Shekel
	CK077	Coin Drop Kit	Taiwan; 10 NT
4	200674P	Opto Coupler	
5	201595P	Wire Guard	

N/A = Part no longer available

© Copyright, Alliance Laundry Systems LLC – DO NOT COPY or TRANSMIT

Coin Drop Components for NetMaster Models

HA, HT, SA and ST Models with NC, NX, ZC and ZX Control Suffixes

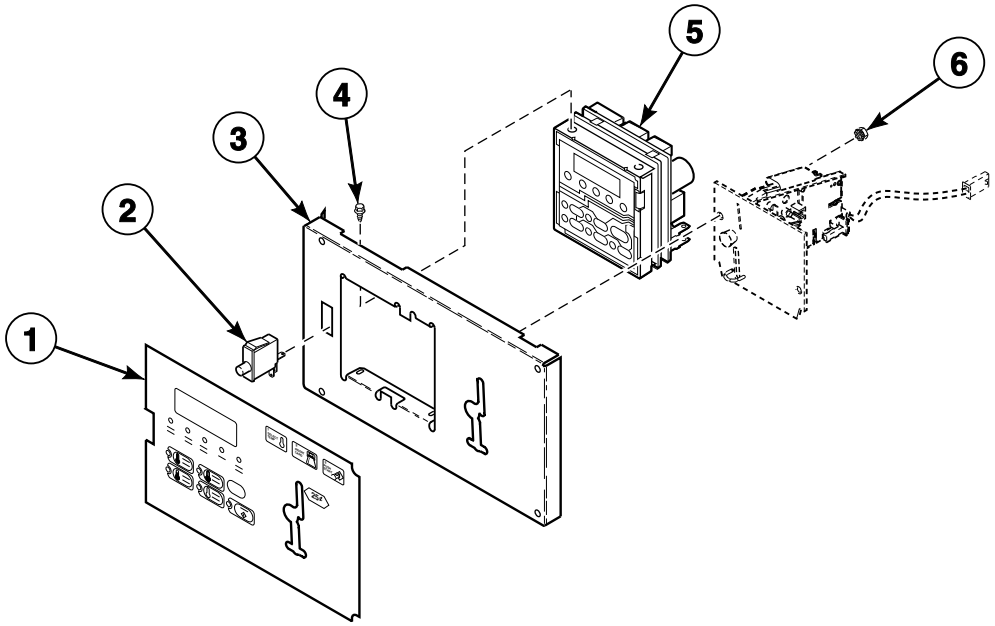

TMB2149P_70275601

© Copyright, Alliance Laundry Systems LLC – DO NOT COPY or TRANSMIT

Coin Drop Components for NetMaster Models

REF	PART NO.	DESCRIPTION	COMMENTS
	70406501	Fuse	Secondary; 1.25 Amp
	70211701	Jumper Calibration Assembly	25 and 30 pound models
	70211702	Jumper Calibration Assembly	35 pound models
	70206301P	Control Panel Harness Assembly	HT and ST models
	70235801	Control Panel Harness Assembly	HA and SA models
	203346	USB IR Interface Kit	
1	70184301	Overlay	ST models; Single drop
	70184302	Overlay	ST models; Dual drop
	70239601	Overlay	HT models; Single drop
	70239602	Overlay	HT models; Dual drop
2	70413301	Pushbutton Switch	
3	70175807	Control Plate Assembly	
4	D501524	Screw	For mounting NetMaster control
5	D505905P	Control Kit	
6	70054	Nut	

© Copyright, Alliance Laundry Systems LLC – DO NOT COPY or TRANSMIT

Card Reader for NetMaster Models

HA, HT, SA and ST Models with NR, NY, ZR and ZY Control Suffixes

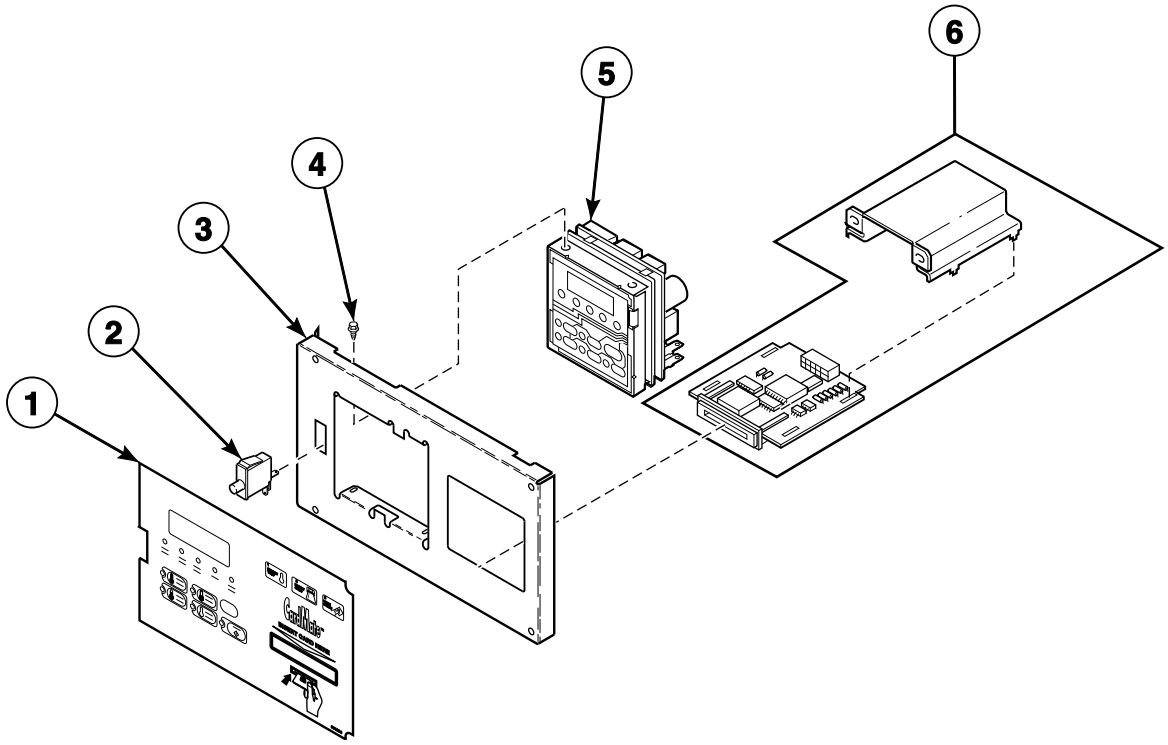

TMB369P_70275601

© Copyright, Alliance Laundry Systems LLC – DO NOT COPY or TRANSMIT

Card Reader for NetMaster Models

REF	PART NO.	DESCRIPTION	COMMENTS
	70406501	Fuse	Secondary; 1.25 Amp
	70208801	Mounting Plate	Use with 70497201 Control Plate Assembly
	70211701	Jumper Calibration Assembly	25 and 30 pound models
	70211702	Jumper Calibration Assembly	35 pound models
	70206301P	Control Panel Harness Assembly	HT and ST models
	70235801	Control Panel Harness Assembly	HA and SA models
	70206601	Card Reader Network Harness Assembly	Card reader or network
	70211801	Card Reader Harness Assembly	
	203346	USB IR Interface Kit	
1	N/A	Overlay	ST models; Card reader ready
	70184401	Overlay	ST models; Card reader
	N/A	Overlay	HT models; Card reader
	N/A	Overlay	HT models; Card reader ready
2	70413301	Pushbutton Switch	
3	N/A	Control Plate Assembly	Card reader models
	70497201	Control Plate Assembly	Card ready models
4	D501524	Screw	
5	D505905P	Control Kit	
6	D510068P	Card Reader and Bracket Assembly	

N/A = Part no longer available

© Copyright, Alliance Laundry Systems LLC – DO NOT COPY or TRANSMIT

Network Board for NetMaster Models

HA, HT SA and ST Models with ZC, ZR, ZX and ZY Control Suffixes

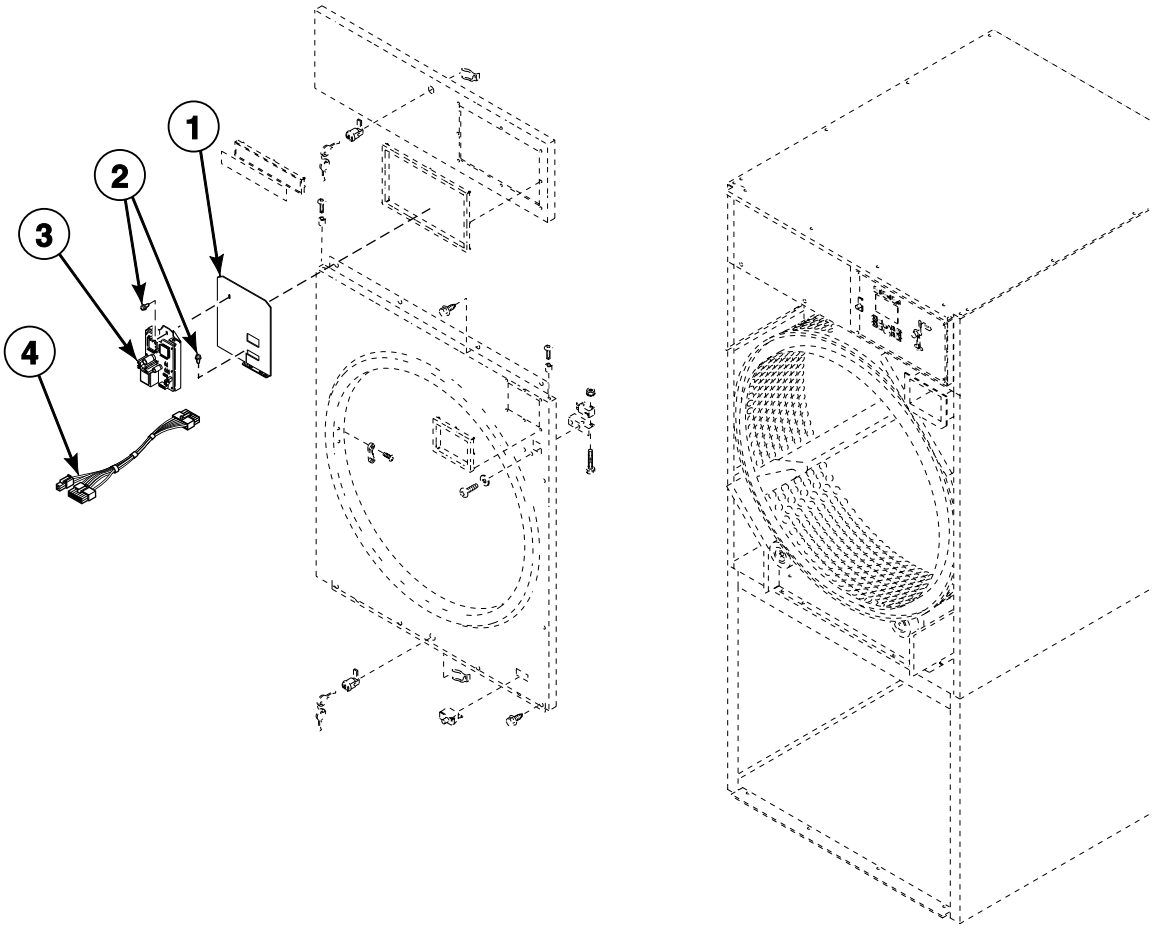

TMB2387P_70275601

© Copyright, Alliance Laundry Systems LLC – DO NOT COPY or TRANSMIT

Network Board for NetMaster Models

REF	PART NO.	DESCRIPTION	COMMENTS
1	210016P	Network Board Assembly	
2	430497	Screw	
3	70201401	Network Plug Support	
4	800217	Network Wire Harness Assembly	

© Copyright, Alliance Laundry Systems LLC – DO NOT COPY or TRANSMIT

Communication Board for NetMaster Models

HA, HT, SA and ST Models with ZC, ZR, ZX and ZY Control Suffixes

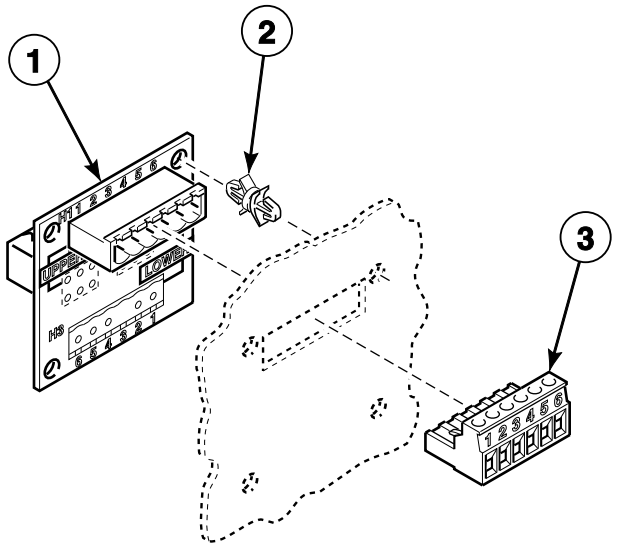

TMB1935P_70275601

© Copyright, Alliance Laundry Systems LLC – DO NOT COPY or TRANSMIT

Communication Board for NetMaster Models

REF	PART NO.	DESCRIPTION	COMMENTS
	800246	Communication Wire Harness Assembly	
	210157P	Network Board	For desktop PC
	210165	Network Cable	For laptop PC
	210097	Communication Board	
1	210095P	Communication Board	
2	210098	PC Board Standoff	4 required
3	210155	3 Circuit Data Connector	

© Copyright, Alliance Laundry Systems LLC – DO NOT COPY or TRANSMIT

Door and Hinge Components

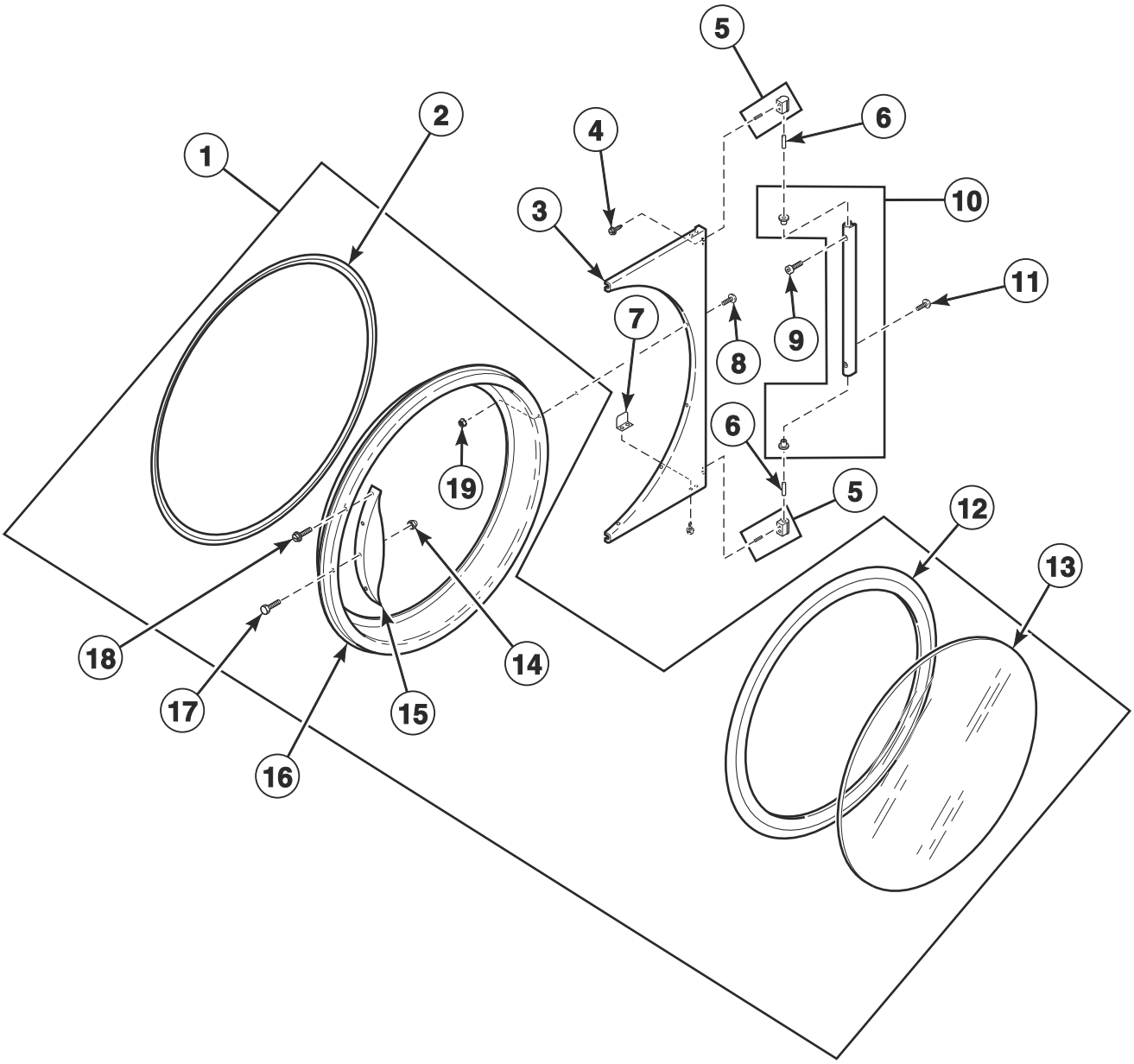

TMB2453P_70275601

© Copyright, Alliance Laundry Systems LLC – DO NOT COPY or TRANSMIT

Door and Hinge Components

REF	PART NO.	DESCRIPTION	COMMENTS
	70133501P	Replacement Door Handle Kit	H models
	M4221P4	Door Glass Installation Tool	
1	70212300	Door Assembly	S models; Excludes hinge
	44058001P	Door Assembly	H models; Excludes hinge
	70176503	Door Assembly	U models; Excludes hinge
	70212200	Door Assembly	P models; Excludes hinge
	44046701	Door Assembly	B, C and I models; Excludes hinge
2	70296801	Door Ring Gasket	
3	70115903W	Door Hinge	35 pound models
	70115902	Door Hinge	35 pound models; Stainless steel
	70116003*	Door Hinge	25 and 30 pound models
	70116006	Door Hinge	25 and 30 pound models; Stainless steel
4	61199	Screw	
5	M4772P3	Hinge Cam Kit	
6	70071401	Pin	
7	70215001P	Door Switch Actuator Kit	
8	D501524	Screw	
9	70033502	Screw	
10	44035001	Door Hinge Lug Assembly	Includes hinge bushings
11	44023301	Screw	B, C and I models
	430757	Screw	All other models
12	70211901P	Door Glass Seal Kit	
13	70133601P	Door Glass	H models
	M400784P	Door Glass	All other models
14	M414215	Nut	H, L, P, S, U and Y models; For door strike; Mounts between door strike screw and door handle
15	44007902P	Door Handle	S and U models
	44057701	Door Handle	H models
	430117	Door Handle	L models
	M400133	Door Handle	P and Y models
16	44043501	Door Ring and Handle Assembly	B, C and I models; Includes straight-edged door handle
17	44024201	Hole Plug	B, C and I models; 4 required
	M400661	Screw	All other models
18	430757	Screw	H, S and U models; Use with 70024801 and 44057701 Door Handle
	M409385	Screw	P and Y models; Use with 70133501P Replacement Door Handle Kit and M400133 Door Handle
	430756	Screw	L models; Use with 430117 Door Handle
19	70054	Nut	

*** Add Letter To Designate Color. L - Almond Q - Bisque W - White**

© Copyright, Alliance Laundry Systems LLC – DO NOT COPY or TRANSMIT

Front Panel and False Front Assemblies

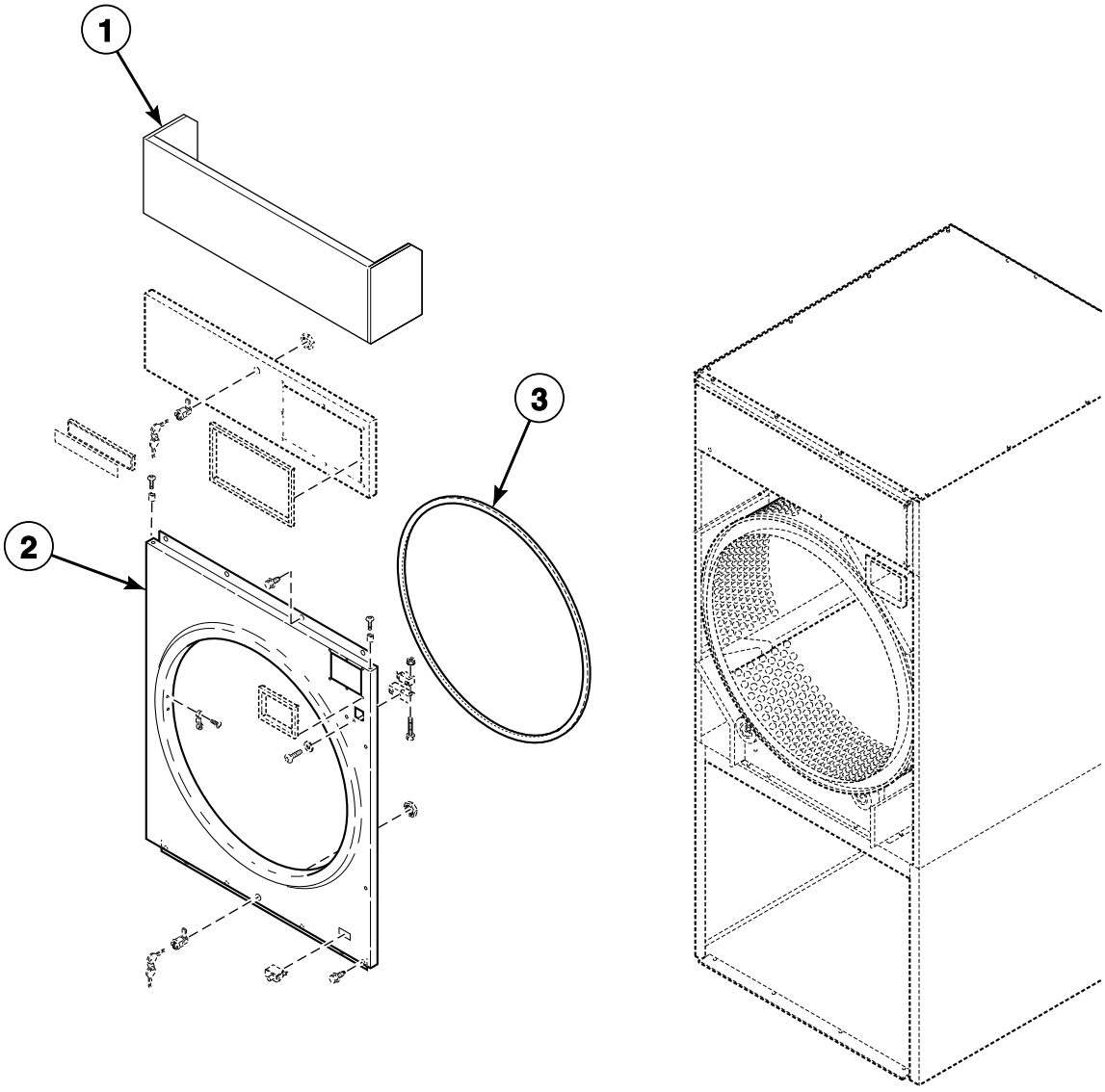

TMB2465P_70275601

© Copyright, Alliance Laundry Systems LLC – DO NOT COPY or TRANSMIT

Front Panel and False Front Assemblies

REF	PART NO.	DESCRIPTION	COMMENTS
1	70000501*P	False Front	25 and 30 pound models; 72 inches
	70000502	False Front	25 and 30 pound models; 72 inches; Stainless steel
	70024201*P	False Front Assembly	25 and 30 pound models; 76 inches
	70024202P	False Front	25 and 30 pound models; 76 inches; Stainless steel
	70021101*P	False Front	35 pound models; 72 inches
	70021104	False Front	35 pound models; 72 inches; Stainless steel
	70024001*P	False Front Assembly	35 pound models; 76 inches
	70024004	False Front	35 pound models; 76 inches; Stainless steel
2	70176201*P	Front Panel Assembly	25 and 30 pound non-CE models; Models with CD, DV and EC control suffixes; Coin
	70176202P	Front Panel Assembly	25 and 30 pound non-CE models; Models with CD, DV and EC control suffixes; Coin; Stainless steel
	70176205LP	Front Panel Assembly	25 and 30 pound non-CE models; Models with DO, MT and OM control suffixes; OPL
	70176206P	Front Panel Assembly	25 and 30 pound non-CE models; Models with DO, MT and OM control suffixes; OPL; Stainless steel
	70176203*P	Front Panel Assembly	25 and 30 pound models; Models with EP control suffix; Card reader
	70176204P	Front Panel Assembly	25 and 30 pound models; Models with EP control suffix; Card reader; Stainless steel
	70176207*P	Front Panel Assembly	25 and 30 pound CE models; Models with CD and EC control suffixes; Coin
	70176208	Front Panel Assembly	25 and 30 pound CE models; Models with CD and EC control suffixes; Coin; Stainless steel
	N/A	Front Panel Assembly	25 and 30 pound CE models; Models with DO, MT and OM control suffixes; OPL
	70176210	Front Panel Assembly	25 and 30 pound CE models; Models with DO, MT and OM control suffixes; OPL; Stainless steel
	70176301*P	Front Panel Assembly	35 pound non-CE models; Models with CD, DV and EC control suffixes; Coin
	70176302	Front Panel Assembly	35 pound non-CE models; Models with CD, DV and EC control suffixes; Coin; Stainless steel
	70176305*P	Front Panel Assembly	35 pound non-CE models; Models with DO, MT and OM control suffixes; OPL
	70176306	Front Panel Assembly	35 pound non-CE models; Models with DO, MT and OM control suffixes; OPL; Stainless steel
	70176303*	Front Panel Assembly	35 pound models; Models with EP control suffix; Card reader
	70176304	Front Panel Assembly	35 pound models; Models with EP control suffix; Card reader; Stainless steel
	70176307*P	Front Panel Assembly	35 pound CE models; Models with CD and EC control suffixes; Coin
	70176308	Front Panel Assembly	35 pound CE models; Models with CD and EC control suffixes; Coin; Stainless steel
	70176309*	Front Panel Assembly	35 pound CE models; Models with DO, MT and OM control suffixes; OPL
	70176310P	Front Panel Assembly	35 pound CE models; Models with DO, MT and OM control suffixes; OPL; Stainless steel
3	70173401P	Front Panel Seal	

*** Add Letter To Designate Color. L - Almond P - Turquoise Q - Bisque W - White**

N/A = Part no longer available

NOTE: False fronts are available to raise the height of the tumblers to match the height of existing equipment.

© Copyright, Alliance Laundry Systems LLC – DO NOT COPY or TRANSMIT

Cabinet Front Components (Drawing 1 of 2)

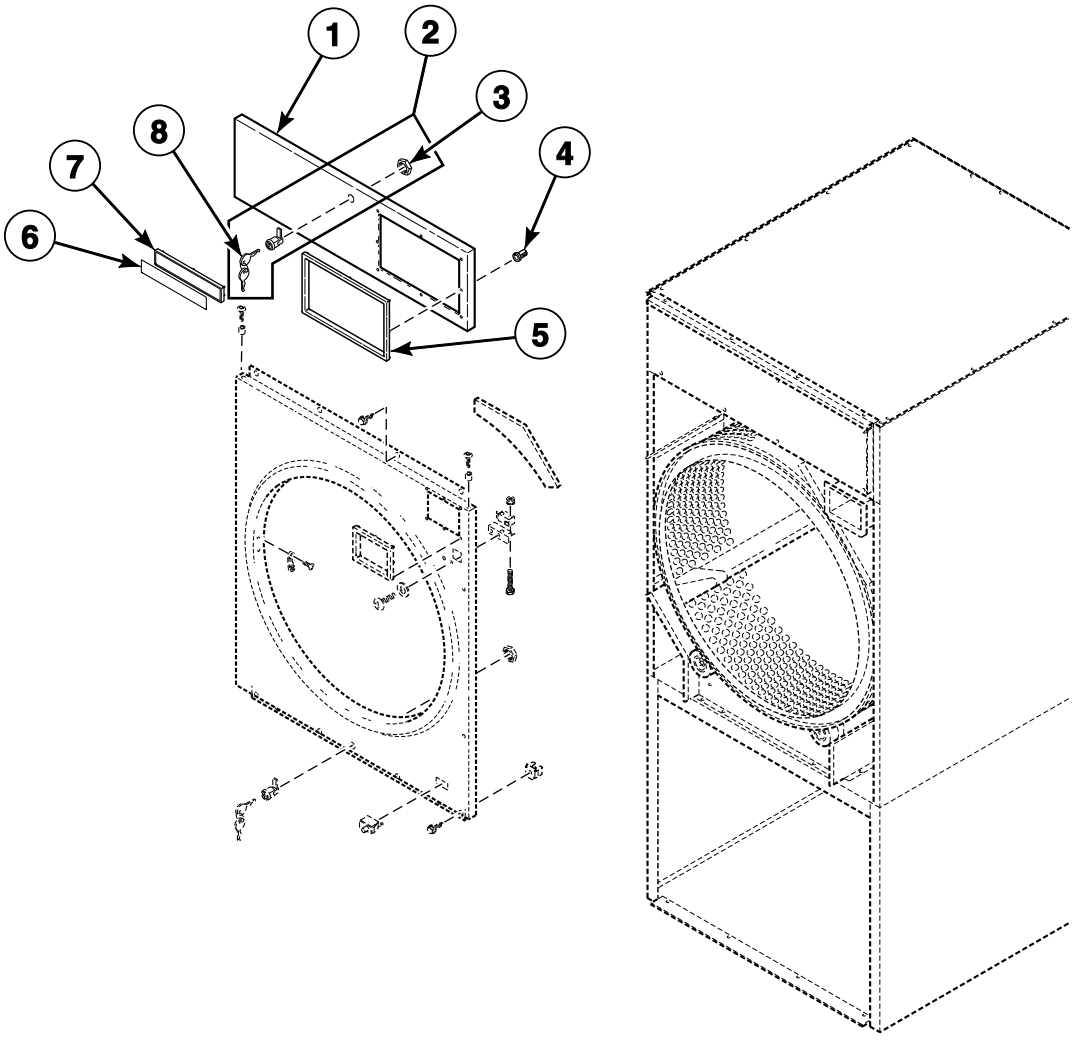

TMB2684P_70275601

© Copyright, Alliance Laundry Systems LLC – DO NOT COPY or TRANSMIT

Cabinet Front Components (Drawing 1 of 2)

REF	PART NO.	DESCRIPTION	COMMENTS
	70121601*P	Control Panel Kit	25 and 30 pound HT models with flat top
	70121602P	Control Panel Kit	25 and 30 pound HT models with flat top; Stainless steel
	70121401*P	Control Panel Kit	35 pound HT models with flat top
	70121402P	Control Panel Kit	35 pound HT models with flat top; Stainless steel
	44063001	Nameplate	25 pound C models; Capacity label
	44063002	Nameplate	30 pound C models; Capacity label
	44063003	Nameplate	35 pound C models; Capacity label
	44104301	Nameplate	25 pound I models; Capacity label
	44104302	Nameplate	30 pound I models; Capacity label
	44104303	Nameplate	35 pound I models; Capacity label
	44046901	Nameplate	25 pound B models; Capacity label
	44046903	Nameplate	35 pound B models; Capacity label
1	70121501*	Control Panel	25 and 30 pound PT, ST and UT models with flat top
	70121508	Control Panel	25 and 30 pound PT, ST and UT models with flat top; Stainless steel
	70121301*	Control Panel	35 pound ST and UT models with flat top
	70121308	Control Panel	35 pound ST and UT models with flat top; Stainless steel
	70121501B	Control Panel	25 and 30 pound L models; Black
	70121301B	Control Panel	35 pound L models; Black
	70121305*	Control Panel	35 pound H models
	70121309	Control Panel	35 pound H models; Stainless steel
	70273301*	Control Panel	25 and 30 pound B, C and I models; Manual
	70273302	Control Panel	25 and 30 pound B, C and I models; Manual; Stainless steel
	70273303*	Control Panel	25 and 30 pound B, C and I models; Electronic
	70273304	Control Panel	25 and 30 pound B, C and I models; Electronic; Stainless steel
	70273401*	Control Panel	35 pound B, C and I models; Manual
	70273402	Control Panel	35 pound B, C and I models; Manual; Stainless steel
	70273403*	Control Panel	35 pound B, C and I models; Electronic
	70273404	Control Panel	35 pound B, C and I models; Electronic; Stainless steel
2	70733701	Lock, Key and Nut Kit	RL001; For use on control door only
3	44088801	Nut	
4	M400972	Shadow Box Clip	
5	70529402	Control Trim	H models; Gray
	44016401	Control Trim	L, P, S, U and Y models; Black
6	70115601	Nameplate Overlay	S models
	70128301	Nameplate Overlay	U models
	70243901	Nameplate	L models
	44046801	Nameplate	B and I models
	44062901	Nameplate	C models
7	70117401	Nameplate Bezel	L, S and U models; For nameplate
8	70155601	Key	RL001; For use on control door only

*** Add Letter To Designate Color. L - Almond P - Turquoise Q - Bisque W - White**

© Copyright, Alliance Laundry Systems LLC – DO NOT COPY or TRANSMIT

Cabinet Front Components (Drawing 2 of 2)

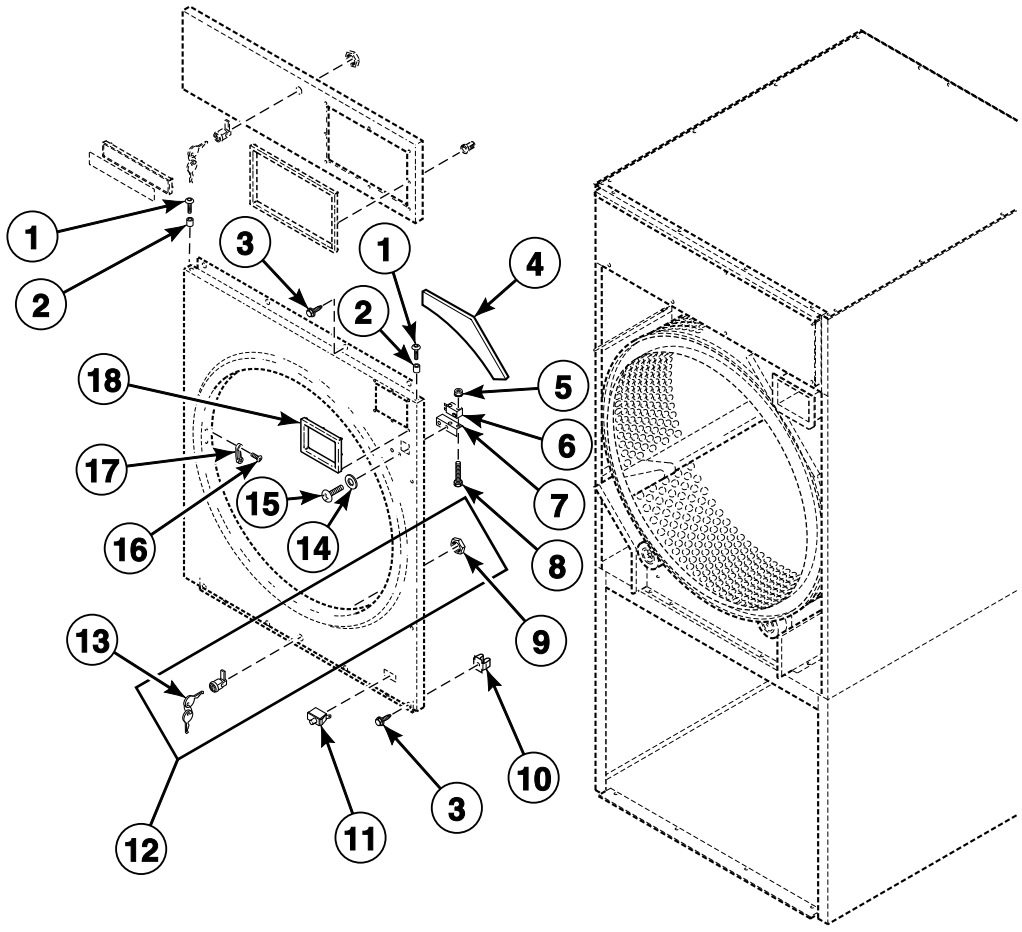

TMB2684PA_70275601

© Copyright, Alliance Laundry Systems LLC – DO NOT COPY or TRANSMIT

Cabinet Front Components (Drawing 2 of 2)

REF	PART NO.	DESCRIPTION	COMMENTS
1	39733	Screw	
2	56079	Panel Locator	9 required
3	430497	Screw	
4	70155301	Front Panel Insulation	35 pound models
	70155401	Front Panel Insulation	25 and 30 pound models
5	70072901	Nut	HA, HU, SA, SU, UA and UU models
6	70125101	Door Switch	CE models
7	70119301	Door Switch Bracket	CE models
8	M401938	Screw	CE models
9	44088801	Nut	
10	70030501	Expansion Clip	8 required
11	70413301	Pushbutton Switch	
12	70722301	Lock, Key and Nut Kit	RL002; For use on lint panel or control door
13	70155602	Key	RL002; For use on lint panel or control door
14	F430311	Washer	CE models
15	70132301	Screw	CE models
16	M400003	Pop Rivet	
17	M401223	Door Latch	
18	70117502	Coin Vault Trim	S and U models; Black
	70117501	Coin Vault Trim	H models; Gray
	N/A	Coin Vault Trim	P models; White

N/A = Part no longer available

© Copyright, Alliance Laundry Systems LLC – DO NOT COPY or TRANSMIT

Emergency Stop Button for CE Models

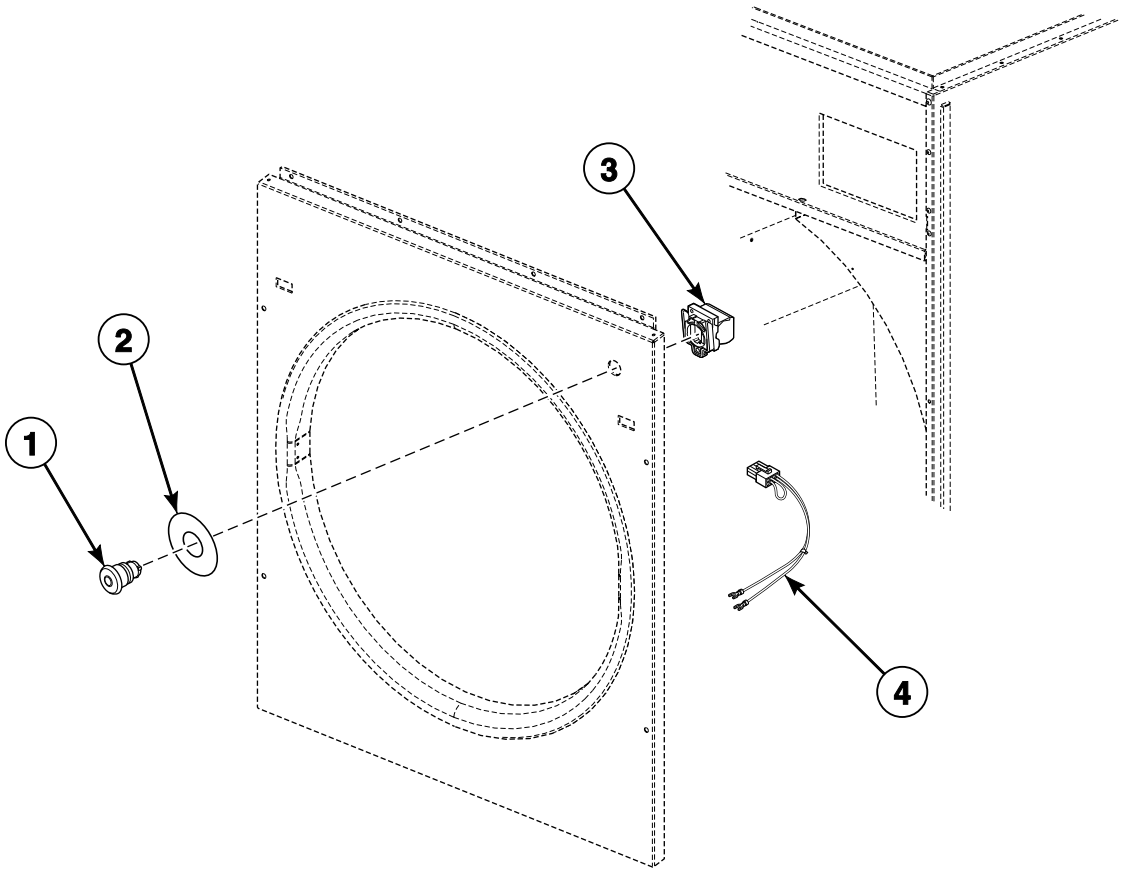

TMB2375P_70275601

© Copyright, Alliance Laundry Systems LLC – DO NOT COPY or TRANSMIT

Emergency Stop Button for CE Models

REF	PART NO.	DESCRIPTION	COMMENTS
1	44018801	Pushbutton	
2	44012901	Emergency Stop Label	
3	44018701	Contact Block	2 required for models with 3O, 3V and 3X control suffixes
4	70083901	Emergency Stop Switch Harness Assembly	Models with 3O, 3V and 3X control suffixes through July 11, 2005 and all other models
	70364102	Emergency Stop Harness	Models with 3O, 3V and 3X control suffixes starting July 12, 2005

© Copyright, Alliance Laundry Systems LLC – DO NOT COPY or TRANSMIT

Cylinder Components

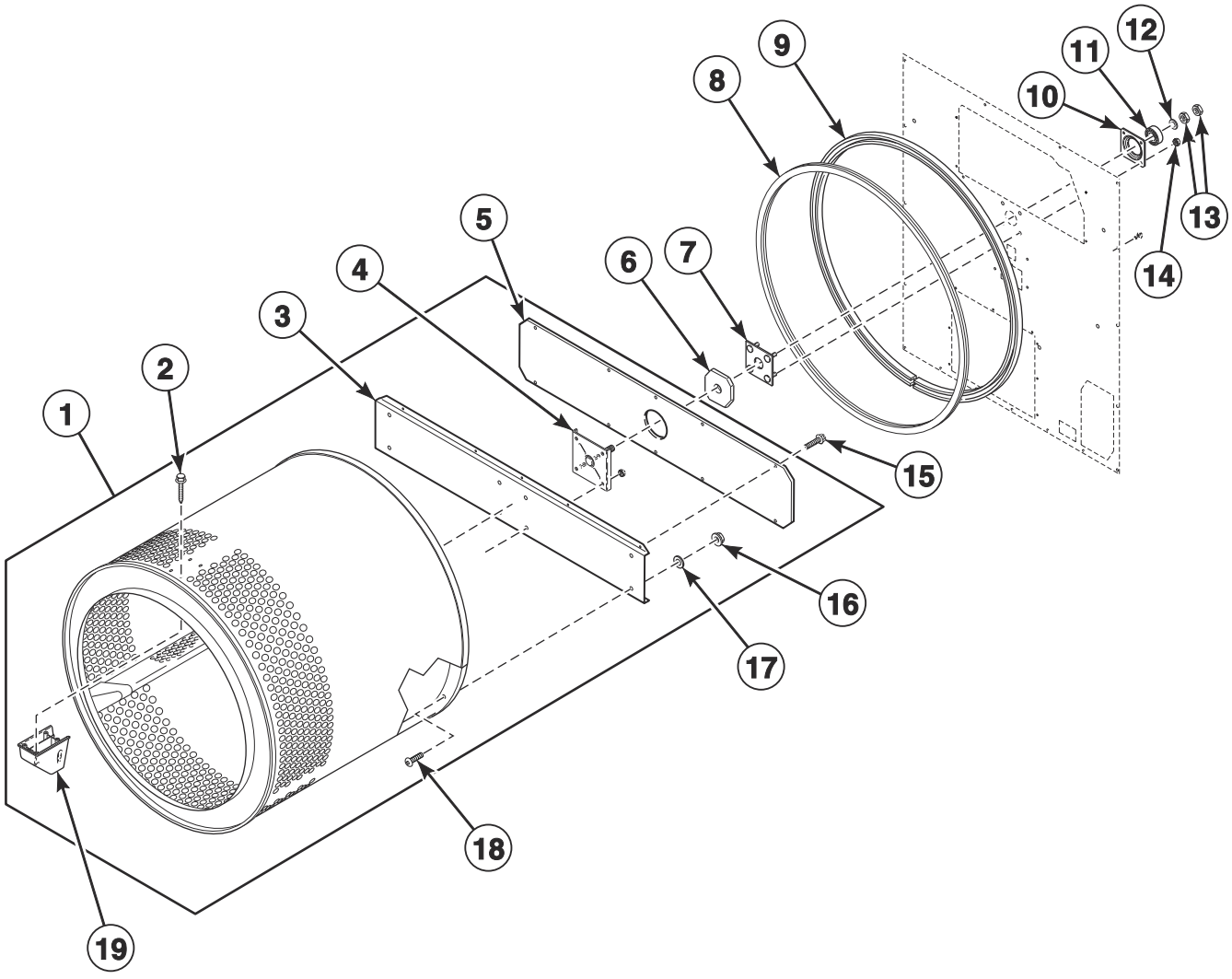

TMB3076P

© Copyright, Alliance Laundry Systems LLC – DO NOT COPY or TRANSMIT

Cylinder Components

REF	PART NO.	DESCRIPTION	COMMENTS
	263P4	Cylinder Guide Tool	
	D511637P	Adhesive	For item 6
	70066004	Center Cylinder Seal	25 and 30 pound models
	70066003	Center Cylinder Seal	35 pound models
	70058501	Pop Rivet	10 required for seal support
	70343101P	Drywall Screw Magnet Kit	
1	70221901P	Cylinder, Trunnion and Seal Kit	25 pound models; Includes 70190601 Cylinder Channel and item 8; Galvanized
	70221902P	Cylinder, Trunnion and Seal Kit	25 pound models; Includes 70190601 Cylinder Channel and item 8; Stainless steel
	70222001P	Cylinder, Trunnion and Seal Kit	30 pound models; Includes 70190601 Cylinder Channel and item 8; Galvanized
	70222002P	Cylinder, Trunnion and Seal Kit	30 pound models; Includes 70190601 Cylinder Channel and item 8; Stainless steel
	70222101P	Cylinder, Trunnion and Seal Kit	35 pound models; Includes 70190701 Cylinder Channel and item 8; Galvanized
	70222102P	Cylinder, Trunnion and Seal Kit	35 pound models; Includes 70190701 Cylinder Channel and item 8; Stainless steel
2	62588	Screw	
3	70257301	Rear Cylinder Channel	25 and 30 pound models
	70257101	Rear Cylinder Channel	35 pound models
4	70564801	Trunnion and Seal Kit	25 and 30 pound models; Includes item 8
	70564803	Trunnion and Seal Kit	35 pound models; Includes item 8
5	70257401	Rear Cylinder Channel Plate	25 and 30 pound models
	70257201	Rear Cylinder Channel Plate	35 pound models
6	430351	Cylinder Bearing Stud Plate	
7	430352	Cylinder Bearing Stud Plate Assembly	
8	70013702	Rear Cylinder Seal	25 and 30 pound models; D511637P Adhesive required
	70013701P	Rear Cylinder Seal	35 pound models; D511637P Adhesive required
9	70506401	Rear Cylinder Seal Support	25 and 30 pound models
	70506402	Rear Cylinder Seal Support	35 pound models
10	70013901	Rear Cylinder Bearing Housing	
11	70448701	Support Bearing	
12	M400991	Washer	
13	M400022	Nut	
14	44087201	Nut	
15	430497	Screw	10 required
16	44087201	Nut	8 required
17	M400080	Washer	
18	70392801	Bolt	8 required
19	70070101	End Cap	

© Copyright, Alliance Laundry Systems LLC – DO NOT COPY or TRANSMIT

Cabinet Components

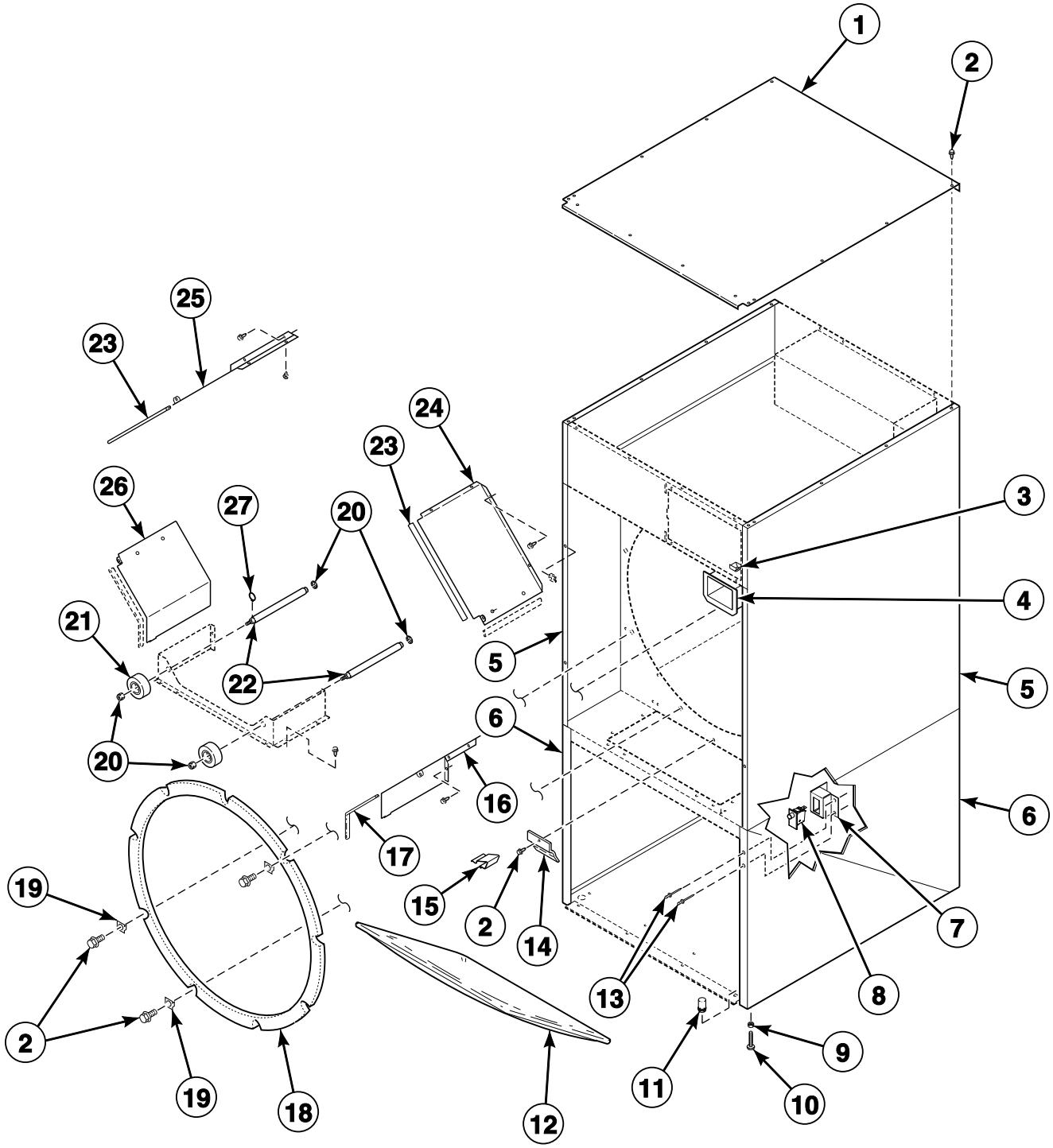

© Copyright, Alliance Laundry Systems LLC – DO NOT COPY or TRANSMIT

Cabinet Components

REF	PART NO.	DESCRIPTION	COMMENTS
	70277801	Main Interlock Harness	Models with 3O, 3V and 3X control suffixes through July11, 2005 and all other models
	70083801	Coin Vault Harness Assembly	
	70084001	Jumper Bypass Assembly	
1	70557601	Flat Top	30 pound models; Galvanized
	70557701	Flat Top	35 pound models; Galvanized
	N/A	Flat Top	25 pound models; Galvanized
2	430497	Screw	
3	70296401	Coin Chute Assembly	CD and EC control suffixes
4	70180101	Coin Vault Assembly	CD and EC control suffixes
5	N/A	Side Panel Assembly	25 pound models; Upper
	70021501*P	Side Panel Assembly	30 and 35 pound models; Upper
6	70253901*P	Side Panel	25 pound models; Lower
	70253801*P	Side Panel	30 and 35 pound models; Lower
7	70277301	Lint Panel Switch Bracket	
8	70413301	Pushbutton Switch	
9	21899	Nut	
10	34319	Leveling Leg	
11	70063201	Hole Plug	
12	70290401	Lint Screen	
13	70058501	Pop Rivet	
14	70054501	Lint Screen Clip	25 pound models
15	35865	Hold-Down Clip	30 and 35 pound models
16	70022301	Baffle	25 and 30 pound models; Lower right
	N/A	Partition Baffle	35 pound models; Lower right
17	70015703	Baffle Gasket	10.5 inches
	70015701	Baffle Gasket	11.38 inches
	70015702	Baffle Gasket	8.75 inches
18	70066004	Center Cylinder Seal	25 and 30 pound models
	70066003	Center Cylinder Seal	35 pound models
19	70226701	Clip	
20	430576	Nut	
21	70616701	Roller and Seal Kit	
22	70017701	Roller Shaft	
23	70015701	Baffle Gasket	Upper baffles 11.38 inches
24	70022001	Partition Baffle	Upper right
25	70022101	Partition Baffle	Upper left
26	N/A	Baffle	25 and 30 pound models; Lower left
	70015201	Partition Baffle	35 pound models; Lower left
27	70023601	Retaining Ring	1 per roller shaft

*** Add Letter To Designate Color. Q - Bisque W - White**

N/A = Part no longer available

© Copyright, Alliance Laundry Systems LLC – DO NOT COPY or TRANSMIT

Lower Cabinet Components

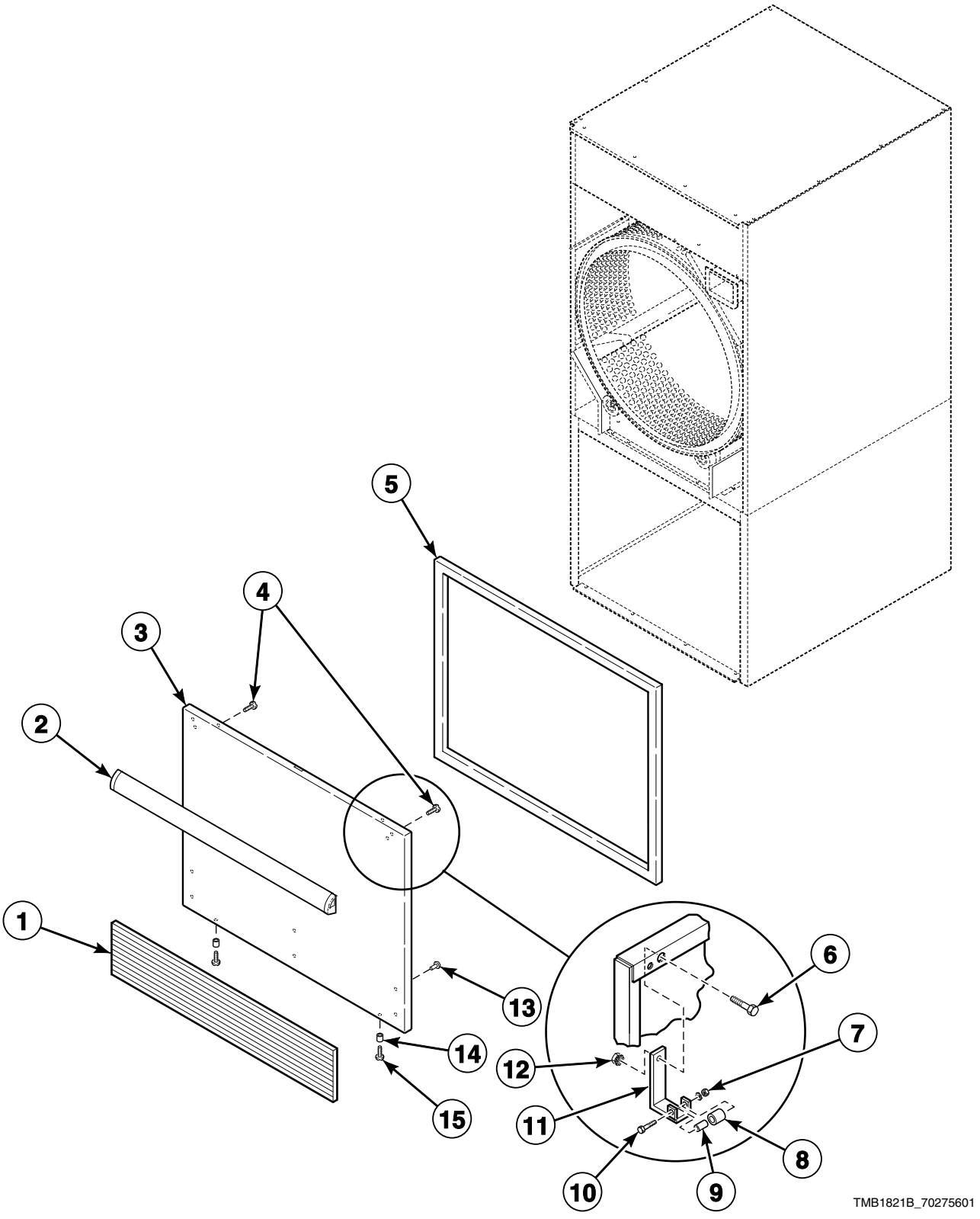

© Copyright, Alliance Laundry Systems LLC – DO NOT COPY or TRANSMIT

Lower Cabinet Components

REF	PART NO.	DESCRIPTION	COMMENTS
	M4379P4	Tumbler Dolly Kit	
1	70117602	Kickplate	25 and 30 pound H models; Dark gray
	70117601	Kickplate	All other 25 and 30 pound models; Black
	70117604	Kickplate	35 pound H models; Dark gray
	70117603	Kickplate	All other 35 pound models; Black
2	70154401	Handle and Caps Assembly	25 and 30 pound P, S and U models; Black
	70154402	Handle and Caps Assembly	25 and 30 pound H models; Dark gray
	70154403	Handle and Caps Assembly	35 pound S and U models; Black
	70154404	Handle and Caps Assembly	35 pound H models; Dark gray
3	70176601*P	Lint Panel Assembly	25 and 30 pound C, P, S and U models; Models with BC, BX, CD, DV, EC and EP control suffixes; Coin; Includes items 2, 8 and 10
	70176602P	Lint Panel Assembly	25 and 30 pound C, P, S and U models; Models with BC, BX, CD, DV, EC and EP control suffixes; Coin; Stainless steel
	70176605*	Lint Panel Assembly	25 and 30 pound H models; Coin; Includes items 2, 8 and 10
	70176705*	Lint Panel Assembly	35 pound H models; Coin
	70176707*	Lint Panel Assembly	35 pound H models; OPL
	70176606	Lint Panel Assembly	25 and 30 pound H models; Coin; Stainless steel
	70176608	Lint Panel Assembly	25 and 30 pound H models; OPL; Stainless steel
	N/A	Lint Panel Assembly	25 and 30 pound models; Models with DO, MT and OM control suffixes
	70176604	Lint Panel Assembly	25 and 30 pound models; Models with DO, MT and OM control suffixes; Stainless steel
	70176701QP	Lint Panel Assembly	35 pound models; Models with BC, BX, CD, DV, EC and EP control suffixes; Coin
	70176702P	Lint Panel Assembly	35 pound models; Models with BC, BX, CD, DV, EC and EP control suffixes; Coin; Stainless steel
	N/A	Lint Panel Assembly	35 pound models; Models with DO, MT and OM control suffixes; OPL
	70176704	Lint Panel Assembly	35 pound models; Models with DO, MT and OM control suffixes; OPL; Stainless steel
4	430757	Screw	For attaching handle; 6 required
5	70289101P	Gasket	Sold per foot
6	70132301	Screw	Attaching roller catch
7	23951	Nut	
8	70297601	Roller Catch Wheel	
9	70030201	Roller Catch Spacer	
10	70072801	Screw	
11	70030301	Roller Catch Arm	
12	51236	Nut	Attaching roller catch
13	70126301	Pop Rivet	For attaching kickplate; Black; 6 required
	70126401	Pop Rivet	For attaching kickplate; Gray; 6 required
14	56079	Panel Locator	
15	39733	Screw	

*** Add Letter To Designate Color. L - Almond Q - Bisque W - White**

N/A = Part no longer available

© Copyright, Alliance Laundry Systems LLC – DO NOT COPY or TRANSMIT

Lower Cabinet Components - 25 Pound Models with Hinged Lint Door

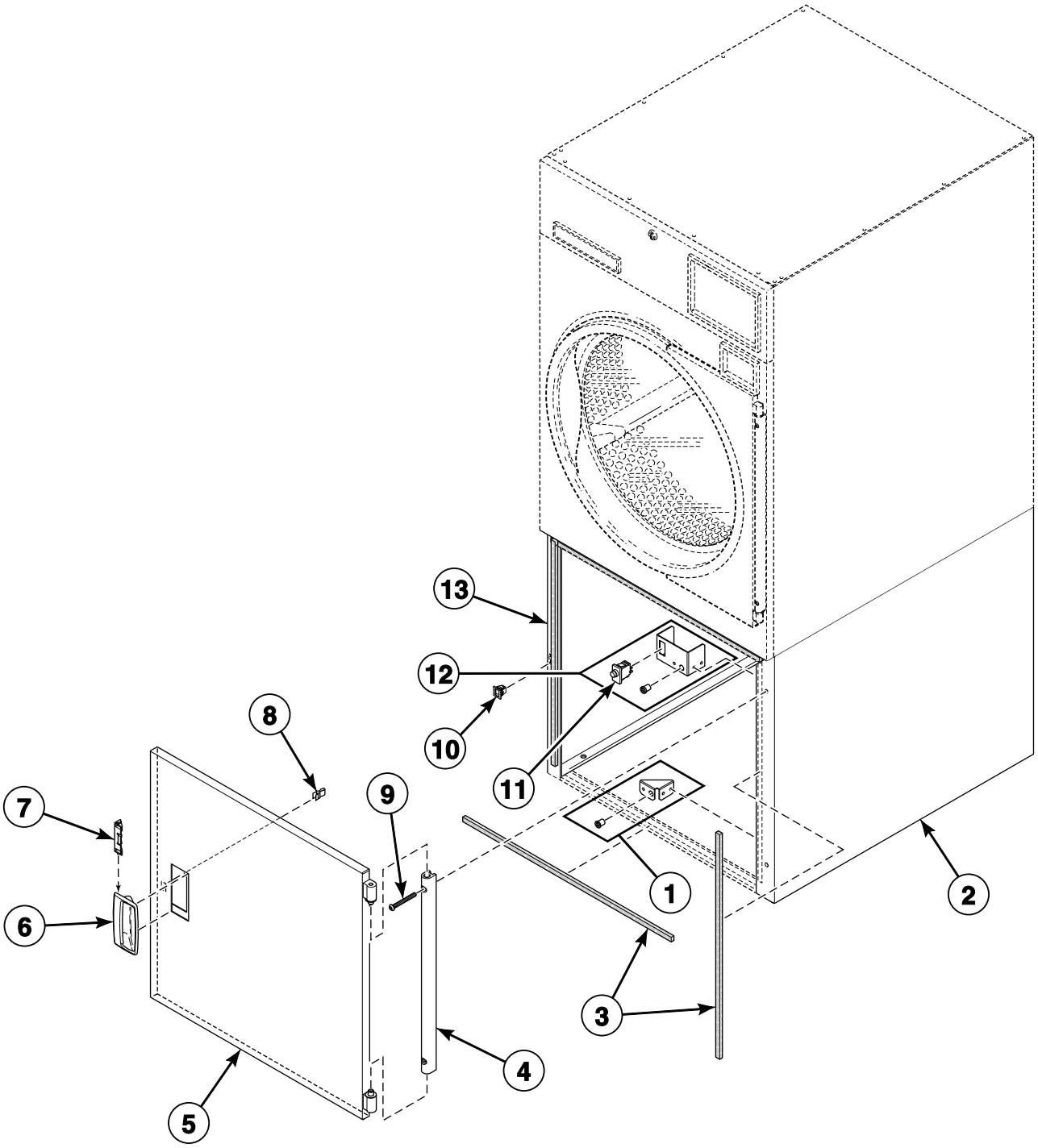

TMB1836B_70275601

© Copyright, Alliance Laundry Systems LLC – DO NOT COPY or TRANSMIT

Lower Cabinet Components - 25 Pound Models with Hinged Lint Door

REF	PART NO.	DESCRIPTION	COMMENTS
1	70283801	Support Bracket Assembly	
2	N/A	Panel	Right
3	70247601	Gasket	8 required; Felt
4	44035001	Door Hinge Lug Assembly	
5	70267701*P	Hinged Door	
6	D510103*P	Door Pull and Wedge Kit	
7	D510129W	Door Handle Wedge	
8	D510181	Door Strike	
9	70033504	Screw	2 required
10	D510177	Door Catch Assembly	
11	70413401	Switch Assembly	
12	70283701	Lint Switch Bracket Assembly	
13	70255801*P	Panel	Left

*** Add Letter To Designate Color. Q - Bisque W - White**

N/A = Part no longer available

© Copyright, Alliance Laundry Systems LLC – DO NOT COPY or TRANSMIT

Drive Motor Components

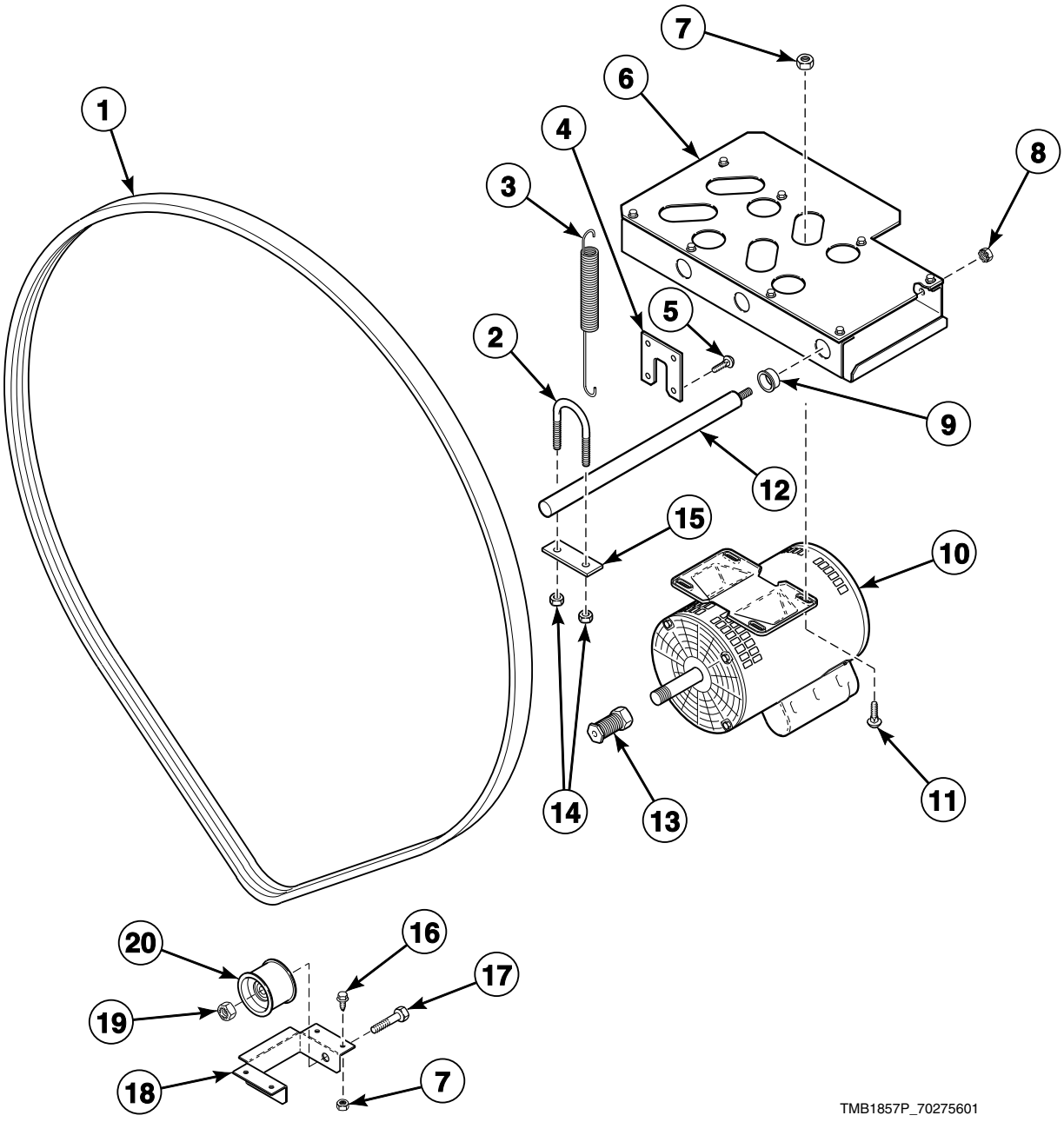

© Copyright, Alliance Laundry Systems LLC – DO NOT COPY or TRANSMIT

Drive Motor Components

REF	PART NO.	DESCRIPTION	COMMENTS
	M4853P3	Belt Tension Tool Kit	
	70053601P	Drive Motor Harness	1 Phase models; 3 Phase electric models with 240 Volt and below
	70083701	Cylinder Motor Harness Assembly	3 Phase models except electric models with 240 Volt and below
1	70276202P	Belt	35 pound models; 102.5 inches
	70276203P	Belt	25 and 30 pound models; 94 inches; Models through 4/4/06
	70276205P	Belt	25 and 30 pound models; 95 inches; Models starting 4/5/06
2	70186101	U-Bolt	
3	70051401	Motor Bracket Spring	
4	70194501	Axial Plate	
5	39733	Screw	
6	N/A	Motor Bracket Assembly	
7	44087201	Nut	
8	70142	Nut	
9	70027701	Bushing	
10	70337801P	Drive Motor	**1 Phase** gas and steam models with 100 Volt/50 or 60 Hertz and 120 Volt/60 Hertz; **3 Phase** electric models with 200-208 Volt; **1 or 3 Phase** electric models 200 Volt/50 Hertz and 200-208-240 Volt
	70338101P	Drive Motor	**3 Phase** gas and steam models with 200 Volt/50 Hertz, 230-240 Volt/50 Hertz and 240 Volt/60 Hertz; **3 Phase** gas, steam and electric models with 380 Volt/50 Hertz and 460-480 Volt/60 Hertz; **3 Phase** electric models with 400-415 Volt/50 Hertz
	70337901P	Drive Motor Kit	120-240 Volt/60 Hertz/1 Phase; Low Amp
	70338001P	Drive Motor Kit	**1 Phase** gas, steam and electric models with 230 Volt/50 Hertz; **3 Phase** electric models with 230-240 Volt/50 Hertz
11	70062401	Bolt	
12	70187801	Motor Pivot Shaft	
13	70284202	Motor Pulley	25 and 30 pound models; 60 Hertz
	70284201	Motor Pulley	35 pound models; 60 Hertz
	70284204	Motor Pulley	25 and 30 pound models; 50 Hertz
	70284203	Motor Pulley	35 pound models; 50 Hertz
14	29786	Nut	
15	70186601	U-Bolt Plate	
16	70566401	Screw	
17	430648	Screw	
18	70200901	Idler Pivot Bracket	
19	56156	Nut	
20	70050401P	Idler Wheel Assembly	

N/A = Part no longer available

© Copyright, Alliance Laundry Systems LLC – DO NOT COPY or TRANSMIT

Blower Components

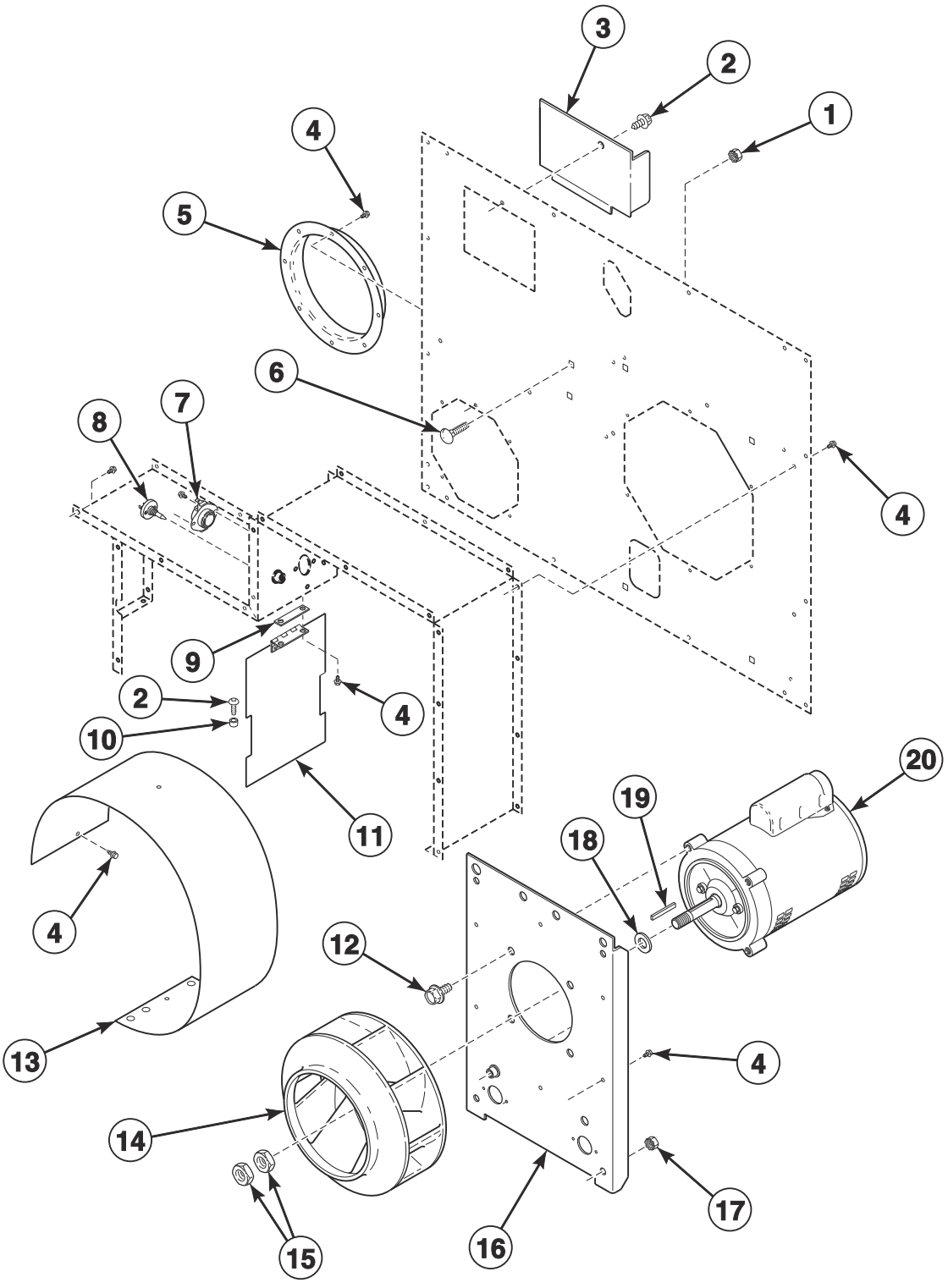

© Copyright, Alliance Laundry Systems LLC – DO NOT COPY or TRANSMIT

Blower Components

REF	PART NO.	DESCRIPTION	COMMENTS
	70299101	Secondary Stove Limit Kit	
	70083401	Fan Motor Harness Assembly	1 Phase models; 3 Phase electric models with 240 Volt or less
	70083501	Fan Motor Harness Assembly	3 Phase electric models with more than 240 Volt
1	44087201	Nut	
2	M411072	Screw	
3	70144601	Drive Access Cover	
4	430497	Screw	
5	70017801	Exhaust Thimble	25 and 30 pound models; 6 inches
	70015601	Exhaust Thimble	35 pound models; 8 inches
6	70062401	Bolt	
7	M411307	Limit Thermostat	Non-Australian models
	M411945	Manual Reset Thermostat	Australian models
8	M414704	Thermistor	
9	70220901	Damper Spacer	
10	56079	Panel Locator	
11	70209501	Damper and Hinge Exhaust Assembly	
12	70126101	Screw	
13	70016301	Blower Housing Scroll	
14	70359801P	Blower Assembly	
15	M400022	Nut	
16	70012001	Blower Motor Mounting Plate	
17	56156	Nut	
18	M400991	Washer	
19	70144101	Key	Straight
20	70337501P	Blower Motor	**1 Phase** gas and steam models with 100 Volt/50 or 60 Hertz and 120 Volt/60 Hertz; **1 or 3 Phase** electric models with 200 Volt/50 Hertz and 200-208-240 Volt/60 Hertz
	70342601P	Blower Motor	**3 Phase** gas and steam models with 200 Volt/50 Hertz, 240 Volt/60 Hertz and 230-240 Volt/50 Hertz; **3 Phase** gas, steam and electric models with 380 Volt/50 Hertz and 460-480 Volt/60 Hertz; **3 Phase** electric models with 400-415 Volt/50 Hertz
	70337701P	Blower Motor Kit	**1 Phase** gas, steam and electric models with 230-240 Volt/50 Hertz; **3 Phase** electric models with 230-240 Volt/50 Hertz

© Copyright, Alliance Laundry Systems LLC – DO NOT COPY or TRANSMIT

Airflow Switch

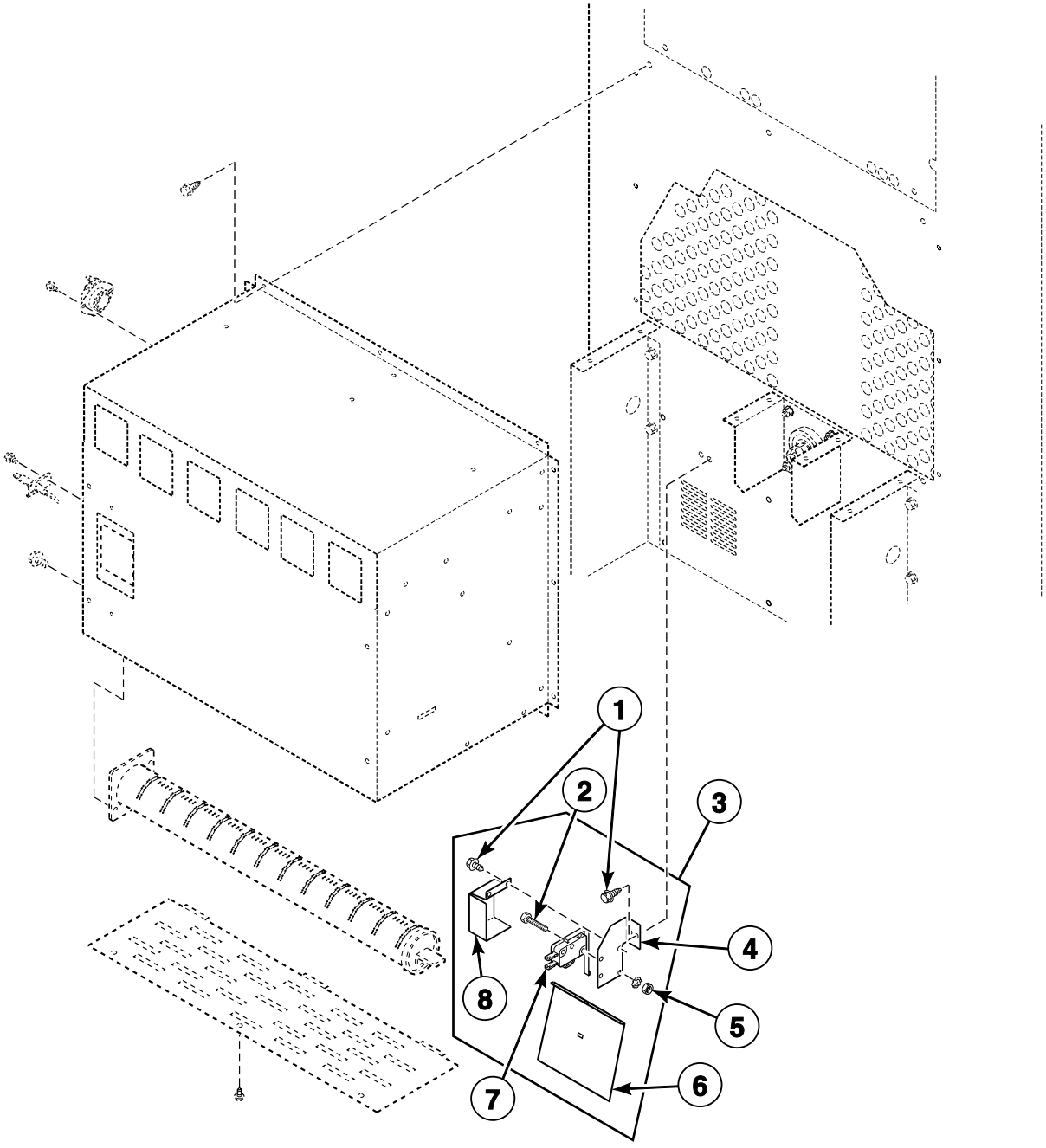

T500P_70275601

© Copyright, Alliance Laundry Systems LLC – DO NOT COPY or TRANSMIT

Airflow Switch

REF	PART NO.	DESCRIPTION	COMMENTS
1	51780	Screw	
2	M401938	Screw	
3	70270901P	Airflow Switch Kit	
4	70266301	Airflow Switch Bracket	
5	M400979	Nut	
6	70266201	Airflow Switch Vane	
7	70267301	Airflow Switch	
8	70281801	Airflow Switch Cover	

© Copyright, Alliance Laundry Systems LLC – DO NOT COPY or TRANSMIT

Gas Burner Components

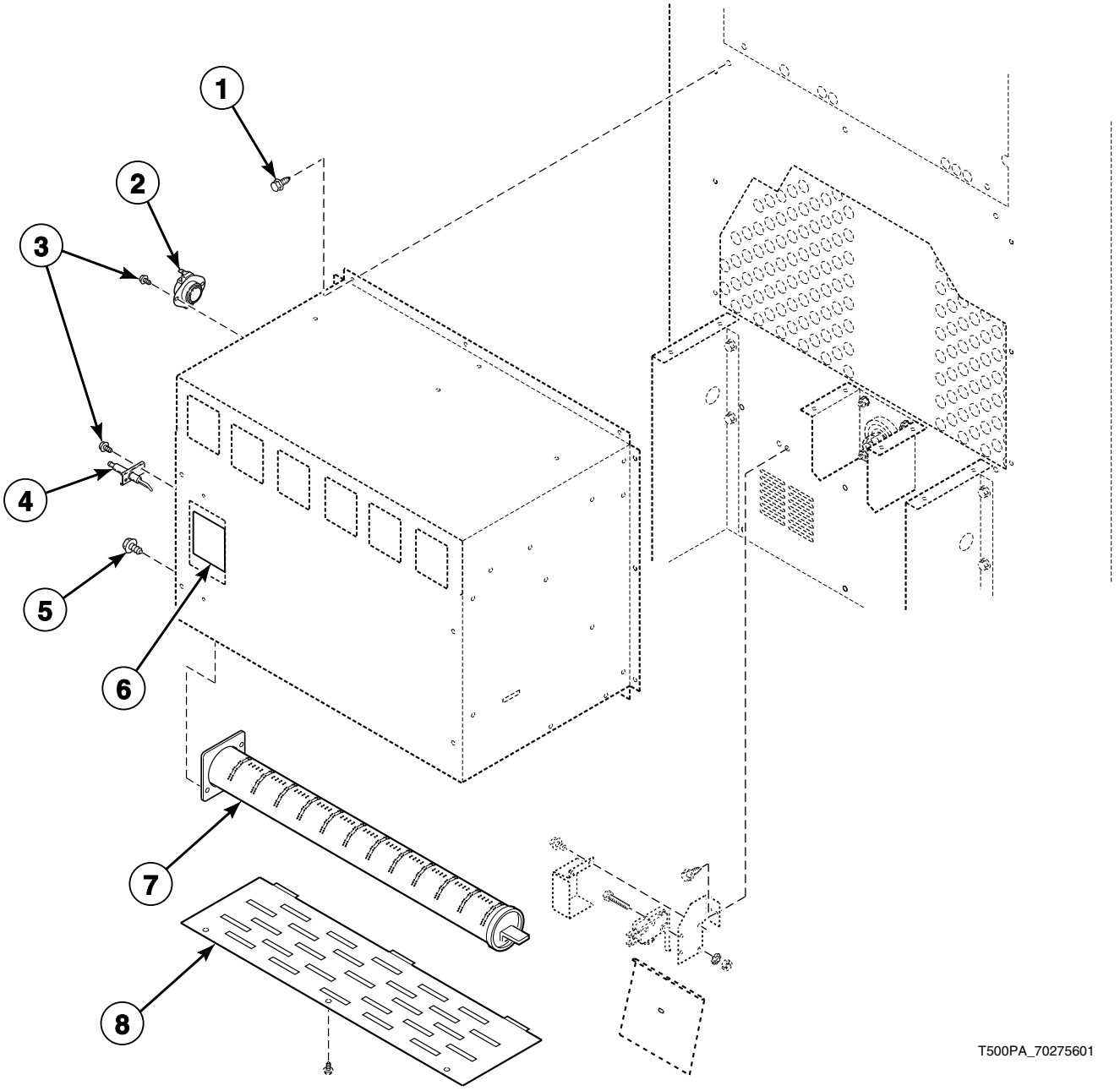

© Copyright, Alliance Laundry Systems LLC – DO NOT COPY or TRANSMIT

Gas Burner Components

REF	PART NO.	DESCRIPTION	COMMENTS
1	51780	Screw	
2	M410542	Limit Thermostat	25 and 30 pound HT, HU, LT, LU, PT, PU, ST, SU, UT and UU models
	M409219	Limit Thermostat	35 pound HT, HU, LT, LU, PT, PU, ST, SU, UT and UU models
	70186301	Manual Reset Thermostat	35 pound HA, PA, SA and UA models
	M411941	Manual Reset Thermostat	25 and 30 pound HA, PA, SA and UA models
3	430497	Screw	
4	70032801P	Spark Electrode	
5	05161	Screw	
6	70159601	Igniter Cover	
7	70229801P	Gas Burner	
8	70188801	Burner Grill	

© Copyright, Alliance Laundry Systems LLC – DO NOT COPY or TRANSMIT

Secondary Stove Limit and Gas Burner Housing

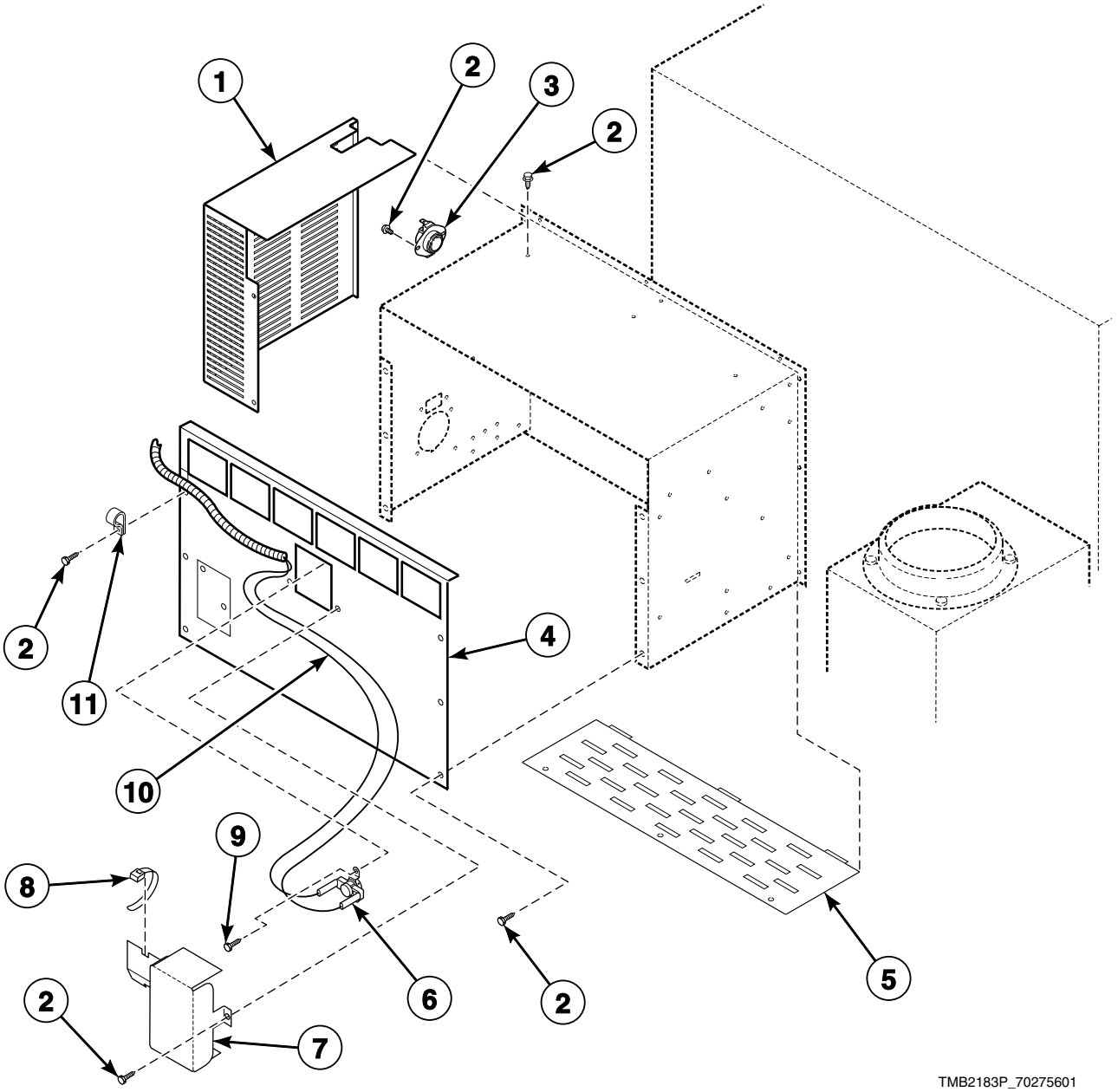

© Copyright, Alliance Laundry Systems LLC – DO NOT COPY or TRANSMIT

Secondary Stove Limit and Gas Burner Housing

REF	PART NO.	DESCRIPTION	COMMENTS
	70299101	Secondary Stove Limit Kit	
	490P3	Thermal Fuse Kit	Use with D15873 Limit Thermostat
1	M4747P3	Valve Bracket and Cover Kit	HU, LU, PU, SU and UU models
2	430497	Screw	
3	70186301	Manual Reset Thermostat	HA, PA, SA and UA models
	M409219	Limit Thermostat	HT, HU, LT, LU, PT, PU, ST, SU, UT, UU and YT models
4	70297401	Stove Back	
5	70188801	Burner Grill	
6	70299001	Limit Thermostat	25 and 30 pound models; Secondary
	D515873	Limit Thermostat	35 pound models; Secondary
7	70112801	Thermistor Cover	
8	55881	Harness Strap	
9	M405188	Screw	2 required
10	70297001	Rear Limit Harness	
11	70203701	Pipe Clip	

© Copyright, Alliance Laundry Systems LLC – DO NOT COPY or TRANSMIT

Rotation Sensor

B, C and I Models

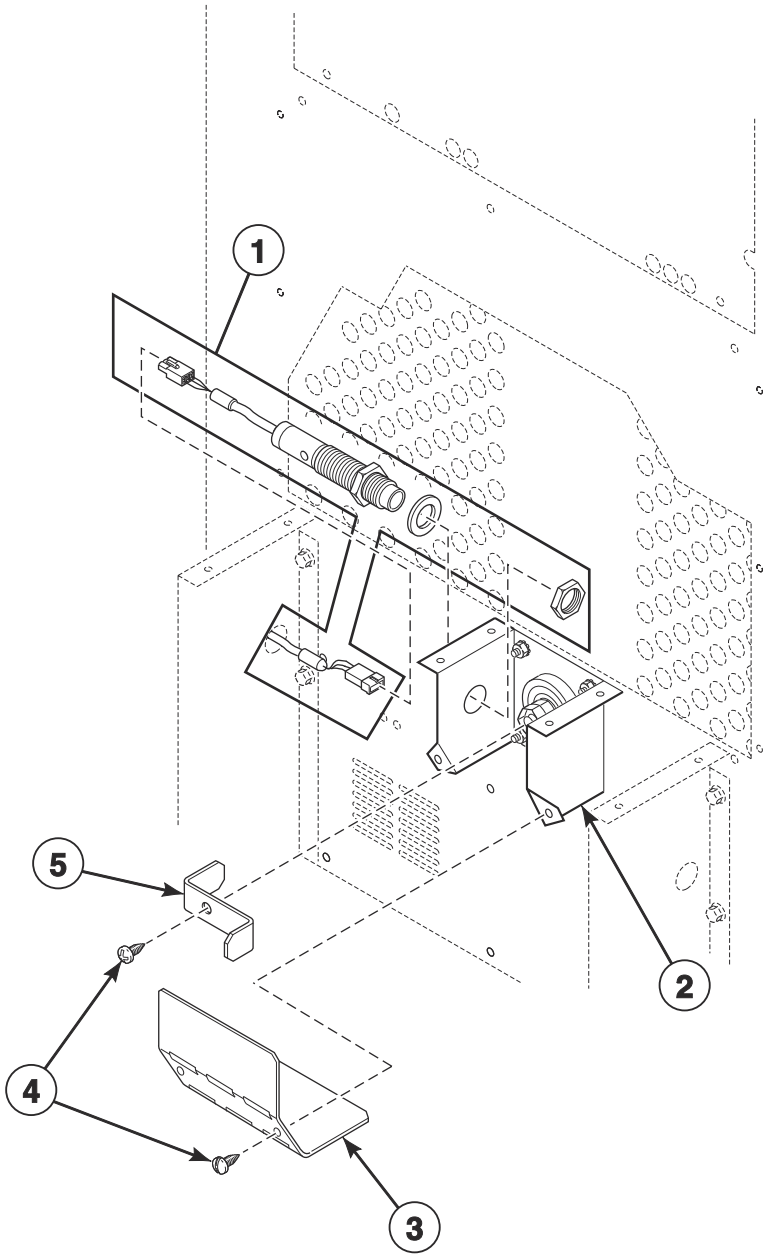

TMB2384P_70275601

© Copyright, Alliance Laundry Systems LLC – DO NOT COPY or TRANSMIT

Rotation Sensor

REF	PART NO.	DESCRIPTION	COMMENTS
1	7009P	Rotation Sensor Kit	
2	70021401	Bearing Housing Bracket	
3	44044301	Rotation Sensor Cover	
4	70153301	Screw	
5	44044401	Rotation Sensor Bracket	

© Copyright, Alliance Laundry Systems LLC – DO NOT COPY or TRANSMIT

Gas Valve Assembly - Non-CE and Non-Australian Models

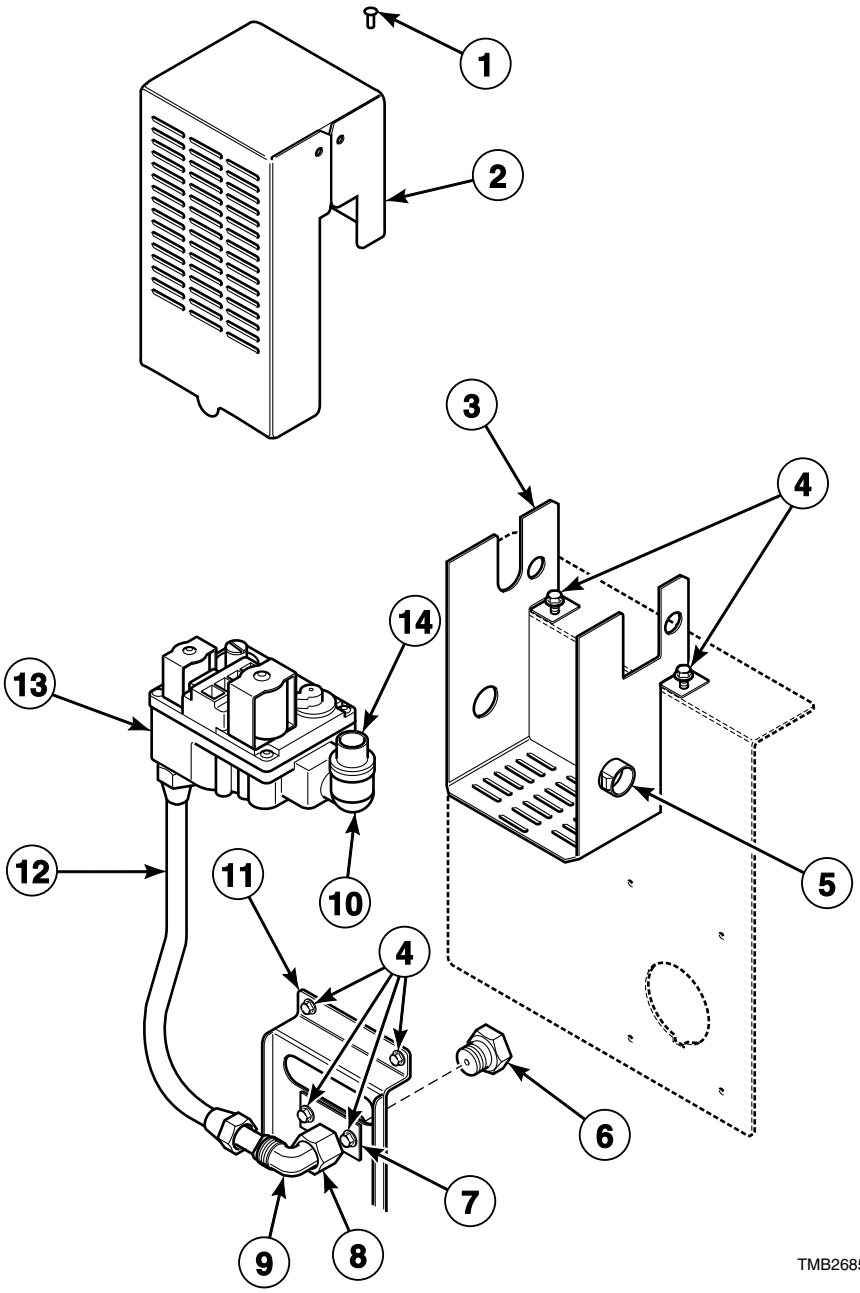

© Copyright, Alliance Laundry Systems LLC – DO NOT COPY or TRANSMIT

Gas Valve Assembly - Non-CE and Non-Australian Models

REF	PART NO.	DESCRIPTION	COMMENTS
1	M405750	Pop Rivet	4 required
2	70271101	Gas Valve Cover	
3	70429801	Gas Valve Bracket	
4	430497	Screw	10 required
5	M400770	Snap Bushing	
6	70391601P	Orifice Adapter Kit	Natural Gas (N.G.); 25 pound models
	70684100	Burner Orifice	Blank
	70684114	Burner Orifice	Liquid Petroleum Gas (L.P.); Drill no. 42 (2.4 mm); 25 pound models 0-2,000 feet; 30 pound models 2,001-6,000 feet; 35 pound models 8,000-10,000 feet
	70684112	Burner Orifice	L.P.; Drill no. 43 (2.3 mm); 25 pound models 2,001-6,000 feet; 30 pound models 6,001-8,000 feet
	70684110	Burner Orifice	L.P.; Drill no. 44 (2.2 mm); 25 pound models 6,001-8,000 feet; 30 pound models 8,000-10,000 feet
	70684108	Burner Orifice	L.P.; Drill no. 46 (2.1 mm); 25 pound models 8,000-10,000 feet
	70684116	Burner Orifice	L.P.; Drill no. 40 (2.5 mm); 30 pound models 0-2,000 feet
	70684120	Burner Orifice	L.P.; Drill no. 36 (2.7 mm); 35 pound models 0-2,000 feet
	70684118	Burner Orifice	L.P.; Drill no. 38 (2.6 mm); 35 pound models 2,001-4,000 feet
	70684117	Burner Orifice	L.P.; Drill no. 39 (2.5 mm); 35 pound models 4,001-6,000 feet
	70684115	Burner Orifice	L.P.; Drill no. 41 (2.4 mm); 35 pound models 6,001-8,000 feet
	70684138	Burner Orifice	N.G.; Drill no. 24 (3.9 mm); 25 pound models 0-2,000 feet; 30 pound models 4,001-6,000 feet
	70684136	Burner Orifice	N.G.; Drill no. 26 (3.7 mm); 25 pound models 2,001-4,000 feet; 30 pound models 6,001-8,000 feet
	70684135	Burner Orifice	N.G.; Drill no. 27 (3.7 mm); 25 pound models 4,001-6,000 feet
	70684134	Burner Orifice	N.G.; Drill no. 28 (3.6 mm); 25 pound models 6,001-8,000 feet; 30 pound models 8,000-10,000 feet
	70684132	Burner Orifice	N.G.; Drill no. 29 (3.4 mm); 25 pound models 8,000-10,000 feet
	70684142	Burner Orifice	N.G.; Drill no. 33 (2.9 mm); 30 pound models 0-2,000 feet; 35 pound models 8,000-10,000 feet
	70684140	Burner Orifice	N.G.; Drill no. 22 (4.0 mm); 30 pound models 2,001-4,000 feet
	70684148	Burner Orifice	N.G.; Drill no. 15 (4.6 mm); 35 pound models 0-2,000 feet
	70684147	Burner Orifice	N.G.; Drill no. 16 (4.5 mm); 35 pound models 2,001-4,000 feet
	70684146	Burner Orifice	N.G.; Drill no. 17 (4.4 mm); 35 pound models 4,001-6,000 feet
	70684143	Burner Orifice	N.G.; Drill no. 19 (4.2 mm); 35 pound models 6,001-8,000 feet
	70684142	Burner Orifice	N.G.; Drill no. 20 (4.1 mm); 35 pound models 8,000-10,000 feet
	M4699P3	L.P. Conversion Kit	25 pound models 0-2,000 feet; 64,000 Btu input
	M4703P3	L.P. Conversion Kit	30 pound models 0-2,000 feet; 73,000 Btu input
	M4706P3	L.P. Conversion Kit	30 pound models 8,001-10,000 feet; 73,000 Btu input
	M4711P3	L.P. Conversion Kit	35 pound models 0-2,000 feet; 90,000 Btu input
	M412997	Harness Assembly	
7	70249001	Orifice Keeper Bracket	
8	70379301	Orifice Adapter	
9	70208701	Elbow	2 required
10	H86070034	Street Elbow	
11	70248901	Orifice Holder Bracket	
12	70271201	Gas Line Assembly	
13	M4969P3	Replacement Gas Valve Kit	N.G.
	M4971P3	Replacement Gas Valve Kit	L.P.
14	431486	Pipe Nipple	

NOTE: For CE gas and orifice information, refer to Installation Manual.

© Copyright, Alliance Laundry Systems LLC – DO NOT COPY or TRANSMIT

Gas Valve and Piping - CE and Australian Gas Models

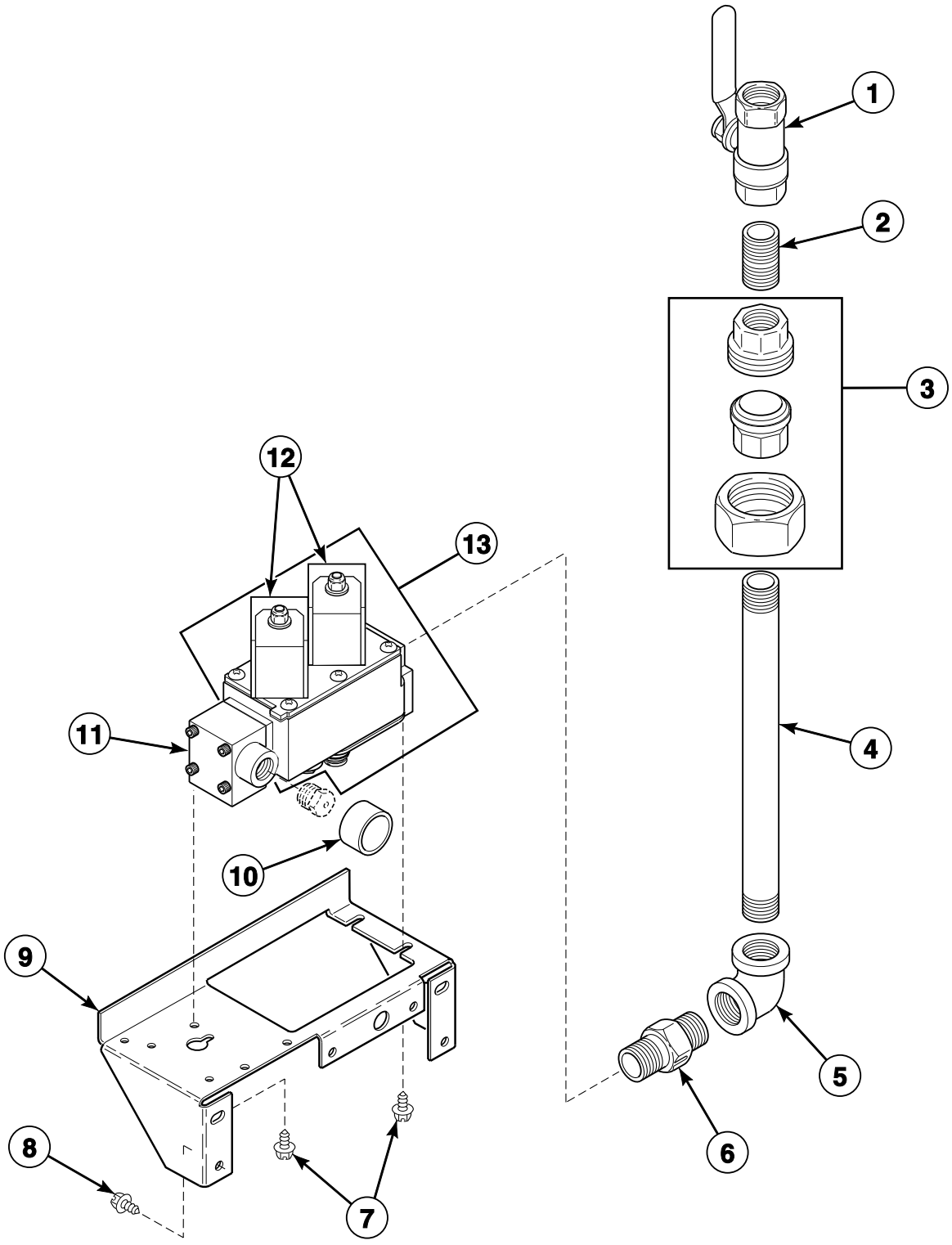

TMB1942P_70275601

© Copyright, Alliance Laundry Systems LLC – DO NOT COPY or TRANSMIT

Gas Valve and Piping - CE and Australian Gas Models

REF	PART NO.	DESCRIPTION	COMMENTS
	431482	O-Ring	
	70184001	Gas Valve Harness	2 coil; Models with Johnson gas valve through 8/11/02
1	M412562P	Gas Shut-Off Valve	
2	431486	Pipe Nipple	1/2 NPT
3	H86000031	Union	
4	70139601	Pipe Nipple	
5	70079601	Elbow	
6	70131901	Adapter	BPT/NPT
7	23222	Screw	
8	430497	Screw	
9	N/A	Gas Valve Bracket	
10	70239801	Primary Air Adjustment Sleeve	
11	70223501	Spud Adapter	
12	70260101	Gas Valve Coil	24 Volt
13	70457301P	N.G. Valve	Regulated
	70457302P	L.P. Valve	Unregulated

N/A = Part no longer available

NOTE: For CE and Australian gas and orifice information, consult local gas supplier.

© Copyright, Alliance Laundry Systems LLC – DO NOT COPY or TRANSMIT

Electric Heater Components

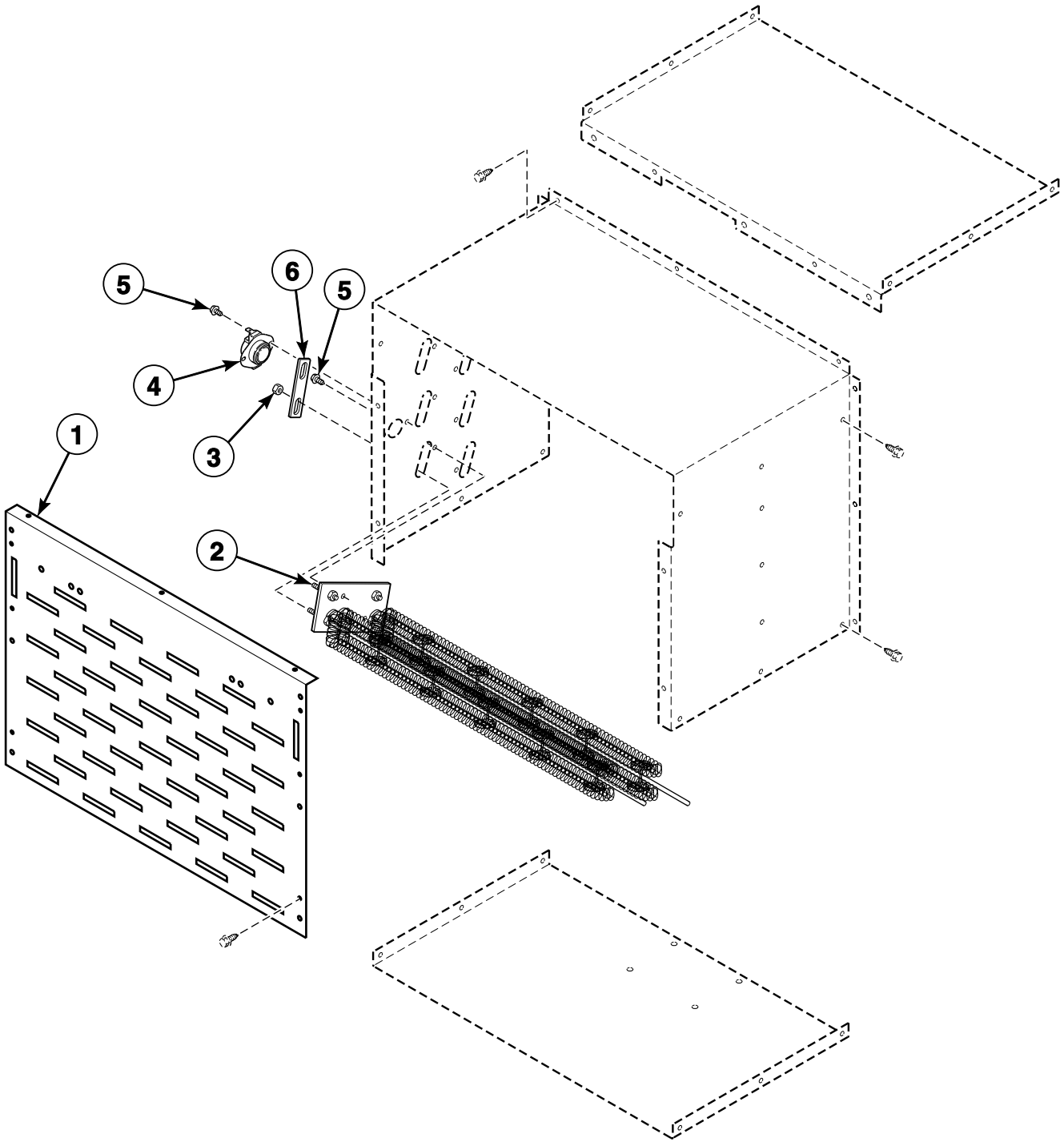

TMB2455P_70275601

© Copyright, Alliance Laundry Systems LLC – DO NOT COPY or TRANSMIT

Electric Heater Components

REF	PART NO.	DESCRIPTION	COMMENTS
	70138601P	Cable Heater Assembly	H1-H3
	70138701	Cable Heater Assembly	H4-H6; 240 Volt or less
1	70214901	Stove Grill	
2	70034413P	Heater Element	3 required; 220 Volt/3 Phase, 3 kW heater element for 25 pound 400 Volt models
	70034414P	Heater Element	3 required; 220 Volt/1 or 3 Phase, 4 kW heater element for 25 pound 380 Volt models
	70034415P	Heater Element	3 required; 208 Volt/1 or 3 Phase, 4 kW heater element for 25 pound 200-208 Volt models
	70034416P	Heater Element	3 required; 240 Volt/1 or 3 Phase and 415-480 Volt/3 Phase, 4 kW heater element for 25 pound 230-240, 400-415 and 460-480 Volt models
	70034401P	Heater Element	3 required; 208 Volt/1 or 3 Phase, 7 kW heater element for 30 pound 200-208 Volt models
	70034402P	Heater Element	3 required; 220 Volt/1 or 3 Phase, 7 kW heater element for 30 pound 380 Volt models
	70034403P	Heater Element	3 required; 240 Volt/1 or 3 Phase and 415-480 Volt/3 Phase, 7 kW heater element for 30 pound 230-240, 400-415 and 460-480 Volt models
	70034404P	Heater Element	3 required; 208 Volt/1 or 3 Phase, 8 kW heater element for 35 pound 200-208 Volt models
	70034405P	Heater Element	3 required; 220 Volt/1 or 3 Phase, 8 kW heater element for 35 pound 380 Volt models
	70034406P	Heater Element	3 required; 240 Volt/1 or 3 Phase and 415-480 Volt/3 Phase, 8 kW heater element for 35 pound 230-240, 400-415 and 460-480 Volt models
3	70054	Nut	
4	M410542	Limit Thermostat	25 pound models
	M409443	Limit Thermostat	30 pound models
	M409433	Limit Thermostat	35 pound models
5	430497	Screw	
6	70066501	Jumper Bar	2 required on 380, 400, 400-415 and 460-480 Volt models

© Copyright, Alliance Laundry Systems LLC – DO NOT COPY or TRANSMIT

Steam Heater Components

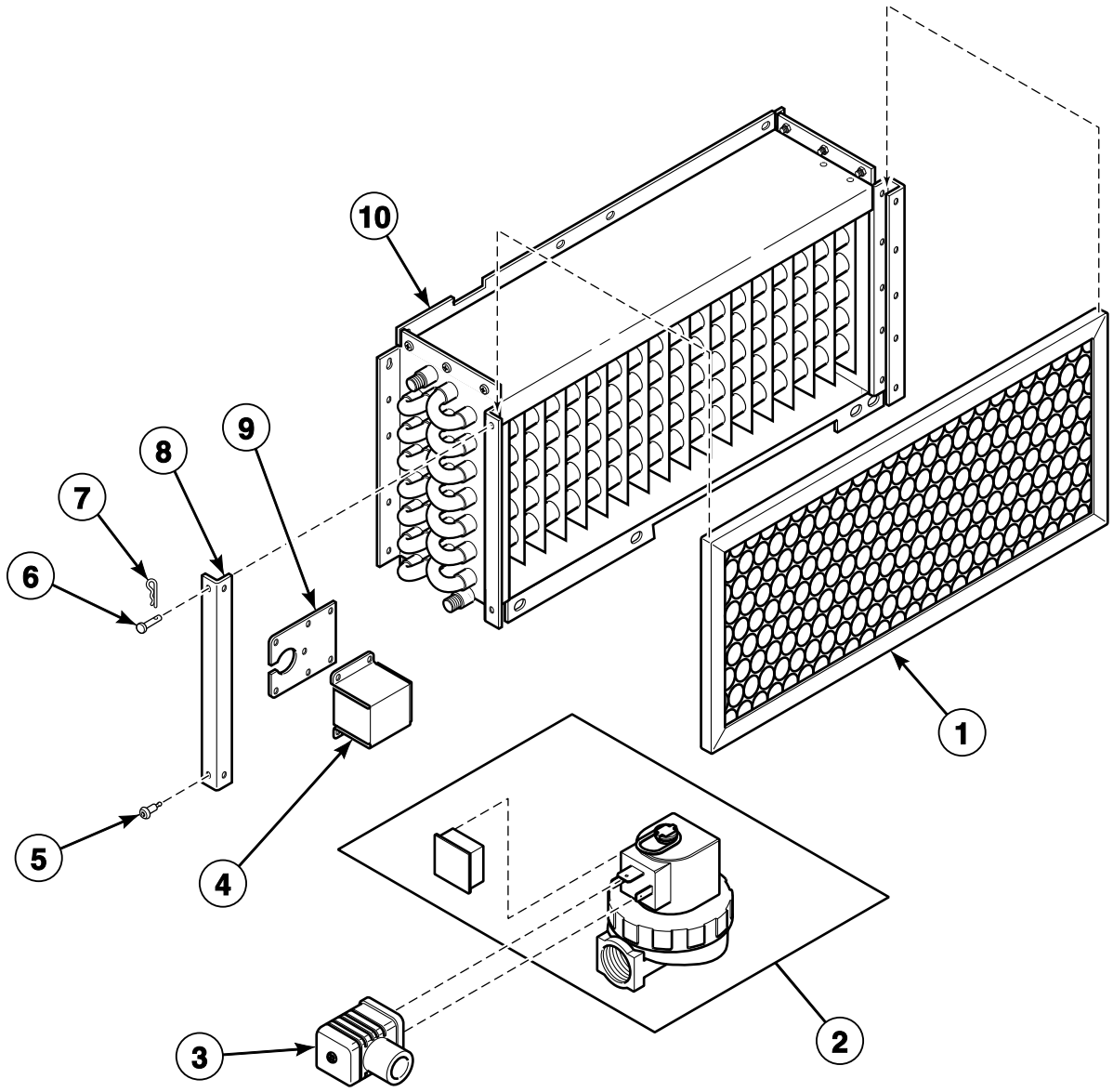

TMB2385P_70275601

© Copyright, Alliance Laundry Systems LLC – DO NOT COPY or TRANSMIT

Steam Heater Components

REF	PART NO.	DESCRIPTION	COMMENTS
	70137801	Thermostat Bracket	
	70139901	Thermostat Cover	
	70205701P	Steam Valve Coil	Use with Danfoss 60 Hertz steam valve
	M412258	Steam Valve Coil	Use with Danfoss 50 Hertz steam valve
	70351011P	Steam Solenoid	24 Volt/60 Hertz; Parker; Models starting Serial No. 0403xxxxx
	70351012	Steam Solenoid	24 Volt/50 Hertz; Parker; Models starting Serial No. 0403xxxxx
	M412259	Steam Valve Rebuild Kit	Danfoss; Models through Serial No. 0403xxxxx
	70351021P	Steam Valve Rebuild Kit	Parker; Models starting Serial No. 0403xxxxx
	F8379502	Valve Rebuild Kit	Use with F8322902 Steam Valve
	F8382301	DIN Valve Adapter Kit	Use with F8322902 Steam Valve
1	70036001	Air Filter	
2	F8322902	Steam Valve	60 Hertz; Asco
	F8322903	Steam Valve	24 Volt/50 Hertz; Asco
	F8521701	Valve Kit	60 Hertz; Parker
3	70370301P	Solenoid Valve DIN Connector	
4	70369501	Steam Valve Wiring Cover	
5	70058501	Pop Rivet	
6	70389201	Clevis Pin	
7	70389301	Hairpin Cotter	
8	70369301	Steam Filter Holder	
9	70369401	Steam Valve Harness Bracket	
10	70231301P	Steam Coil	4 rows
	F8514801	Valve Coil	Use with F8322902 Steam Valve

© Copyright, Alliance Laundry Systems LLC – DO NOT COPY or TRANSMIT

Control Tray - Non-CE and Australian Gas Models

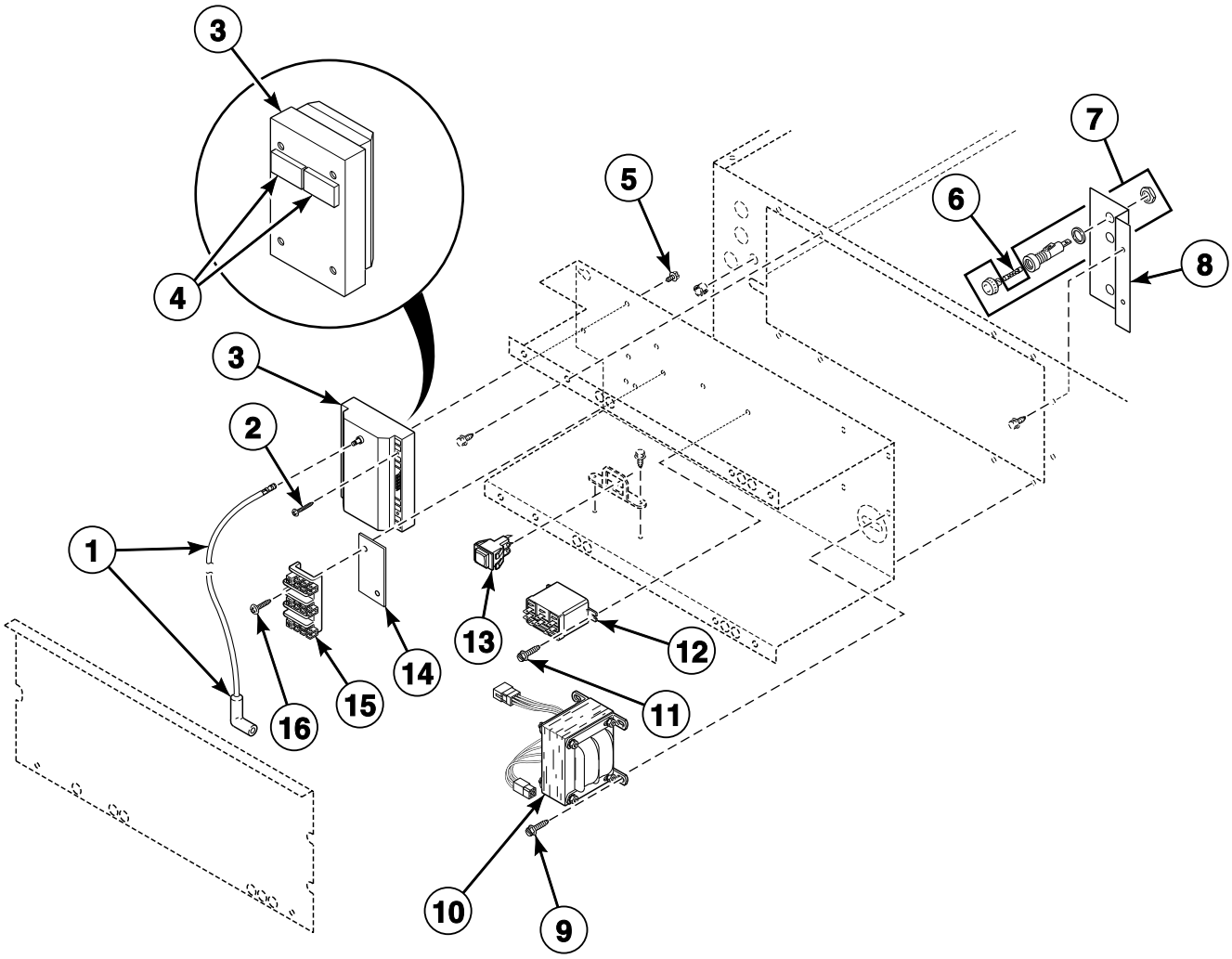

TMB2185P_70275601

© Copyright, Alliance Laundry Systems LLC – DO NOT COPY or TRANSMIT

Control Tray - Non-CE and Australian Gas Models

REF	PART NO.	DESCRIPTION	COMMENTS
	M402917	Screw	Green; Ground
	M413863	Network Capacitor Assembly	3O, 3V, 3X, DO, DV, DX and OM control suffixes
	M413930P	Ferrite Core Assembly	3O, 3V, 3X, DO, DV, DX and OM control suffixes
	70083201	Ignition Control Harness Assembly	Non-Australian models
	70083301P	Ignition Control Harness	Australian models
	M413504	Jumper Harness Assembly	100 Volt/1 Phase
	M413505	Jumper Harness Assembly	120 Volt/1 Phase
	M413506	Jumper Harness Assembly	208 Volt/1 or 3 Phase
	M413508	Jumper Harness Assembly	380 Volt/50 Hertz/3 Phase
	M413509	Jumper Harness Assembly	415 Volt/50 Hertz/3 Phase
	M413510	Jumper Configuration Assembly	480 Volt/60 Hertz/3 Phase
	M413507	Jumper Configuration Assembly	240 Volt
	70083001P	Control Tray Harness Assembly	Fuse, transformer, motor switch relay coil and switch
	70055901P	Power Wire Harness Assembly	1 Phase; Terminal block to transformer
	70120201P	Power Harness Assembly	3 Phase; Terminal block to transformer
1	70006201	High Voltage Lead	Use with 70367301P or 70367401P Ignition Control
	44239702	High Voltage Suppression Cable	Use with 70458601P or 70483201P Ignition Control
2	70118801	Screw	
3	70492701	Ignition Control Kit	Non-Australian models
	70492801	Ignition Control Kit	Australian models
4	56128	Bumper Pad	2 required
5	38272	Screw	
6	M413118	Fuse	Primary; 230-240 Volt; 2 Amp
	M414232	Fuse	Secondary; 3.5 Amp
	M414240	Fuse	Primary; 100-230 Volt; 2 Amp
	44310001	Fuse	Primary; 380-480 Volt; 0.5 Amp
7	M413544P	Fuse Holder	Primary on all 380-480 Volt models
	91024P	Fuse Receptacle	Primary on all other models; Secondary on all models
8	N/A	Fuse Bracket	100-240 Volt
	70123801	Fuse Bracket	380-480 Volt
9	33562	Screw	
10	M414230P	Transformer	120, 208-240 Volt/60 Hertz/1 Phase models with CD and MT control suffixes
	M414312P	Transformer	120, 208-240 Volt/60 Hertz/1 Phase models with BC, BL, BU, BX, BY, NC, NR, NX, NY and OM control suffixes
	M414229P	Transformer	380-480 Volt
	M414228P	Transformer	All other models
11	51778	Screw	For relay
	51780	Screw	For contactor
12	70210901P	Relay	1 Phase
	M413614P	Fan Contactor	3 Phase
13	M413431	Pushbutton Switch	Australian models
14	M413862	Insulator	For terminal block
15	430642	Terminal Block	
16	M405824	Screw	

N/A = Part no longer available

© Copyright, Alliance Laundry Systems LLC – DO NOT COPY or TRANSMIT

Control Tray - CE Gas Models

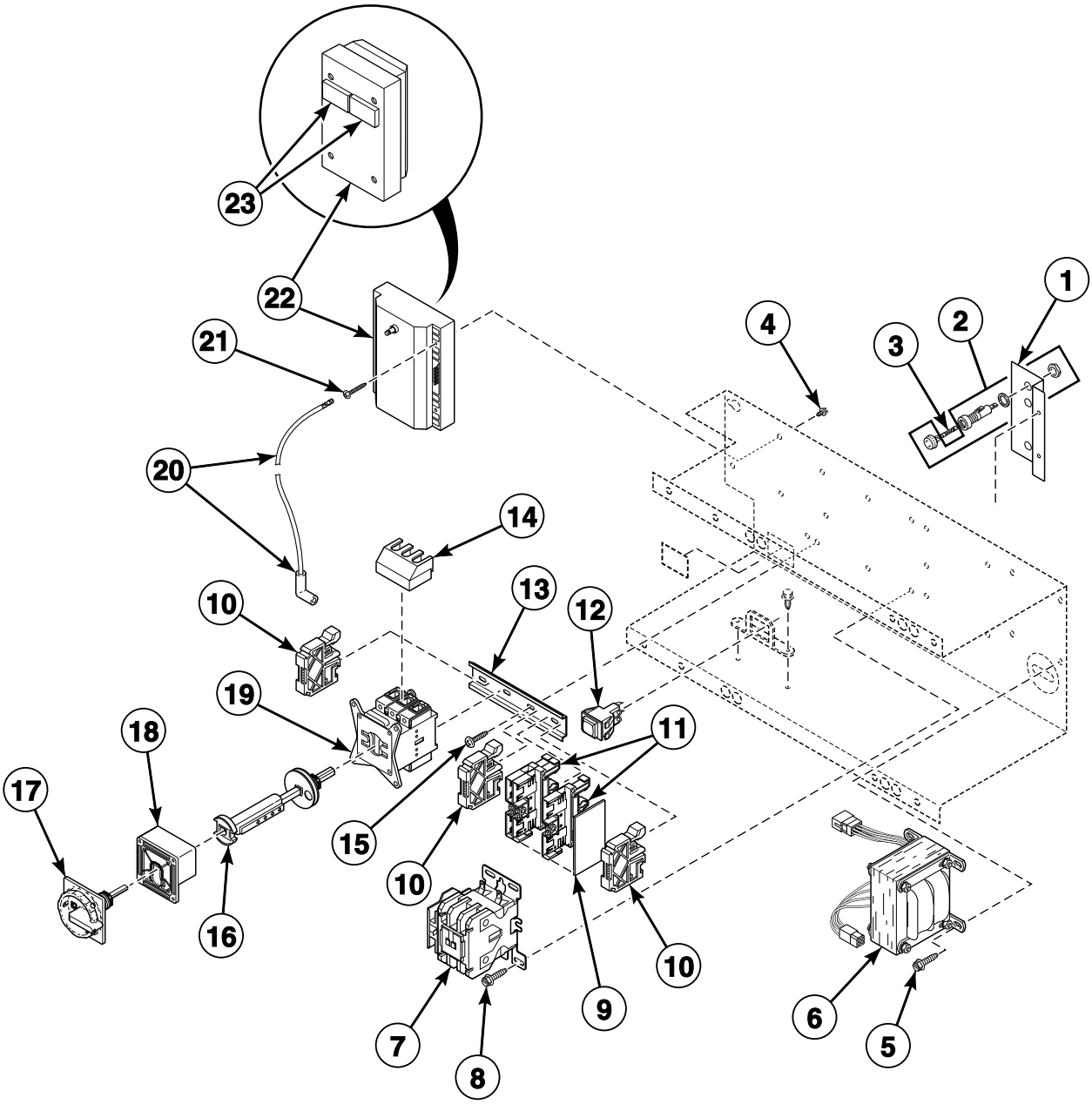

© Copyright, Alliance Laundry Systems LLC – DO NOT COPY or TRANSMIT

Control Tray - CE Gas Models

REF	PART NO.	DESCRIPTION	COMMENTS
	M402917	Screw	Green; Ground
	M413863	Network Capacitor Assembly	3O, 3V, 3X, DO, DV, DX and OM control suffixes
	M413930P	Ferrite Core Assembly	3O, 3V, 3X, DO, DV, DX and OM control suffixes
	70083001P	Control Tray Harness Assembly	
	70120901	Jumper Disconnect Assembly	
	M413507	Jumper Configuration Assembly	230-240 Volt/50 or 60 Hertz/1 or 3 Phase
	M413510	Jumper Configuration Assembly	480 Volt/60 Hertz/3 Phase
	M413506	Jumper Harness Assembly	208 Volt/1 or 3 Phase
	M413508	Jumper Harness Assembly	380 Volt/50 Hertz/3 Phase
	M413509	Jumper Harness Assembly	400-415 Volt/50 Hertz/3 Phase
	70083301P	Ignition Control Harness	
	70055901P	Power Wire Harness Assembly	1 Phase; Terminal block to transformer
	70120201P	Power Harness Assembly	3 Phase; Terminal block to transformer
	M413510	Jumper Configuration Assembly	480 Volt/60 Hertz/3 Phase
1	70123901	Fuse Bracket	200-240 Volt
	70124001	Fuse Bracket	380-415 Volt
2	D502591P	Fuse Holder Kit	250 Volt
	M413544P	Fuse Holder	380-415 Volt; 500 Volt
3	44310001	Fuse	380-415 Volt/3 Phase; 0.5 Amp
	M413867	Fuse	200-230 Volt; 2 Amp
	M413889	Fuse	3 Phase; 4 Amp
	M414232	Fuse	230 Volt/1 Phase; 4 Amp
	M414240	Fuse	100-200 Volt; 2 Amp
4	38272	Screw	
5	33562	Screw	
6	M414228P	Transformer	200-240 Volt
	M414229P	Transformer	380-415 Volt
7	M413614P	Fan Contactor	3 Phase
8	51780	Screw	
9	70121101	End Cover	3 required
10	70121001	End Stop	
11	70120001	Terminal Block	3 required
12	M413431	Pushbutton Switch	Lighted
13	N/A	Din Rail	
14	M412366	Finger Guard	
15	430497	Screw	
16	M412370	Extension Handle	20 Amp
17	M412208	Handle	
18	M412368	Door Interlock	
19	M412187P	Mounting Switch Base	20 Amp
20	70006201	High Voltage Lead	Use with 70367401P Ignition Control
	44239702	High Voltage Suppression Cable	Use with 70483201P Ignition Control
21	70118801	Screw	
22	70492801	Ignition Control Kit	
23	56128	Bumper Pad	2 required

N/A = Part no longer available

© Copyright, Alliance Laundry Systems LLC – DO NOT COPY or TRANSMIT

Control Tray - Non-CE Steam Models

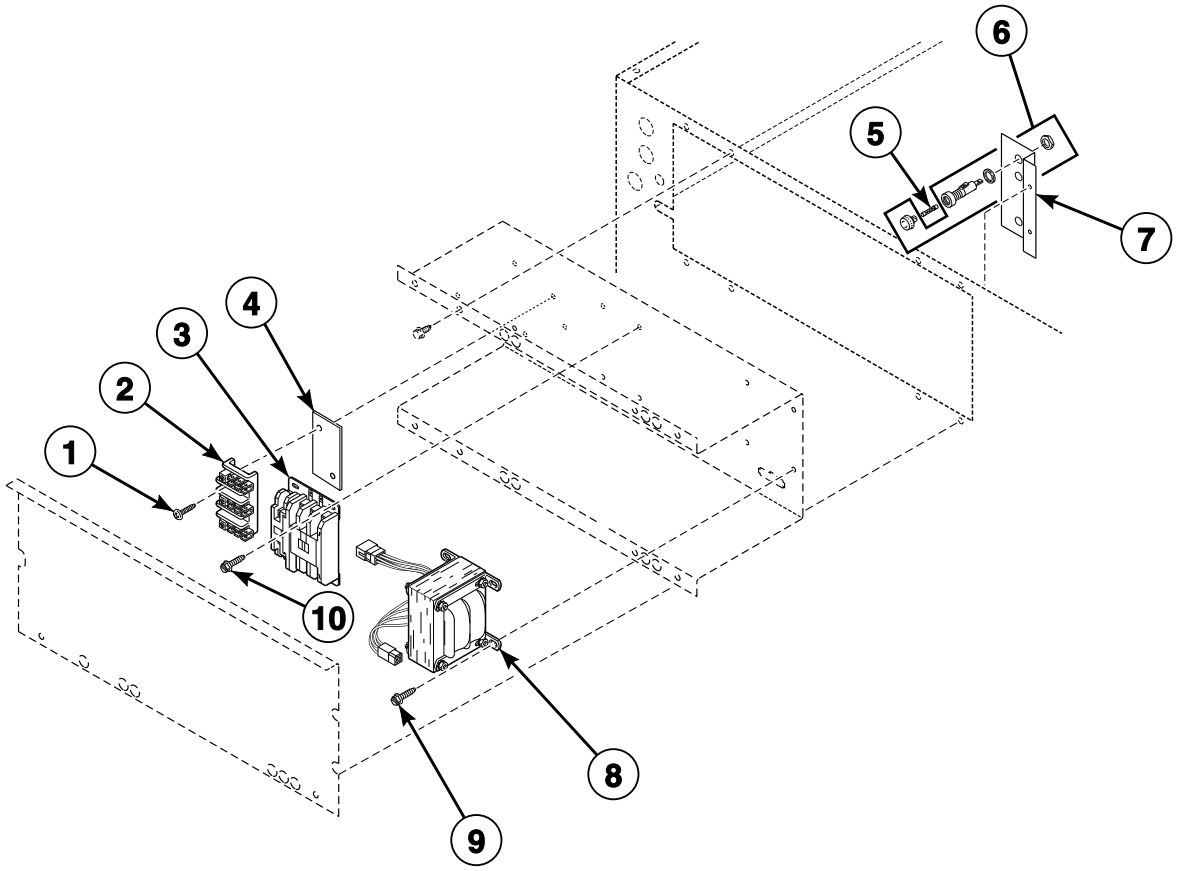

T392PZ3B_70275601

© Copyright, Alliance Laundry Systems LLC – DO NOT COPY or TRANSMIT

Control Tray - Non-CE Steam Models

REF	PART NO.	DESCRIPTION	COMMENTS
	M402917	Screw	Green; Ground
	M413863	Network Capacitor Assembly	3O, 3V, 3X, DO, DV, DX and OM control suffixes
	M413930P	Ferrite Core Assembly	3O, 3V, 3X, DO, DV, DX and OM control suffixes
	70113101	Steam Jumper Assembly	
	M413504	Jumper Harness Assembly	100 Volt/1 Phase
	M413505	Jumper Harness Assembly	120 Volt/1 Phase
	M413506	Jumper Harness Assembly	208 Volt/1 or 3 Phase
	M413508	Jumper Harness Assembly	380 Volt/50 Hertz/3 Phase
	M413509	Jumper Harness Assembly	415 Volt/50 Hertz/3 Phase
	M413507	Jumper Configuration Assembly	240 Volt
	M413510	Jumper Configuration Assembly	480 Volt/60 Hertz/3 Phase
	70083001P	Control Tray Harness Assembly	Fuse, transformer, motor switch relay coil and switch
	70055901P	Power Wire Harness Assembly	1 Phase; Terminal block to transformer
	70120201P	Power Harness Assembly	3 Phase; Terminal block to transformer
1	M405824	Screw	
2	430642	Terminal Block	
3	70210901P	Relay	1 Phase
	M413614P	Fan Contactor	3 Phase
4	M413862	Insulator	For terminal block
5	M413118	Fuse	Primary; All 200-240 Volt; 2 Amp
	44310001	Fuse	Primary; All 380-480 Volt; 0.5 Amp
	M414232	Fuse	Secondary; 3.5 Amp; Used on all models
	M414240	Fuse	Primary; 100-200 Volt; 2 Amp
6	91024P	Fuse Receptacle	
	M413544P	Fuse Holder	All 380-480 Volt
7	N/A	Fuse Bracket	100-240 Volt
	70123801	Fuse Bracket	380-480 Volt
8	M414230P	Transformer	120, 208-240 Volt/60 Hertz/1 Phase models with CD and MT control suffixes
	M414312P	Transformer	120, 208-240 Volt/60 Hertz/1 Phase models with BC, BL, BU, BX, BY, NC, NR, NX, NY and OM control suffixes
	M414229P	Transformer	380-480 Volt
	M414228P	Transformer	All other models
9	M411072	Screw	
10	51778	Screw	For relay
	430497	Screw	For contactor

N/A = Part no longer available

© Copyright, Alliance Laundry Systems LLC – DO NOT COPY or TRANSMIT

Control Tray - CE Steam Models

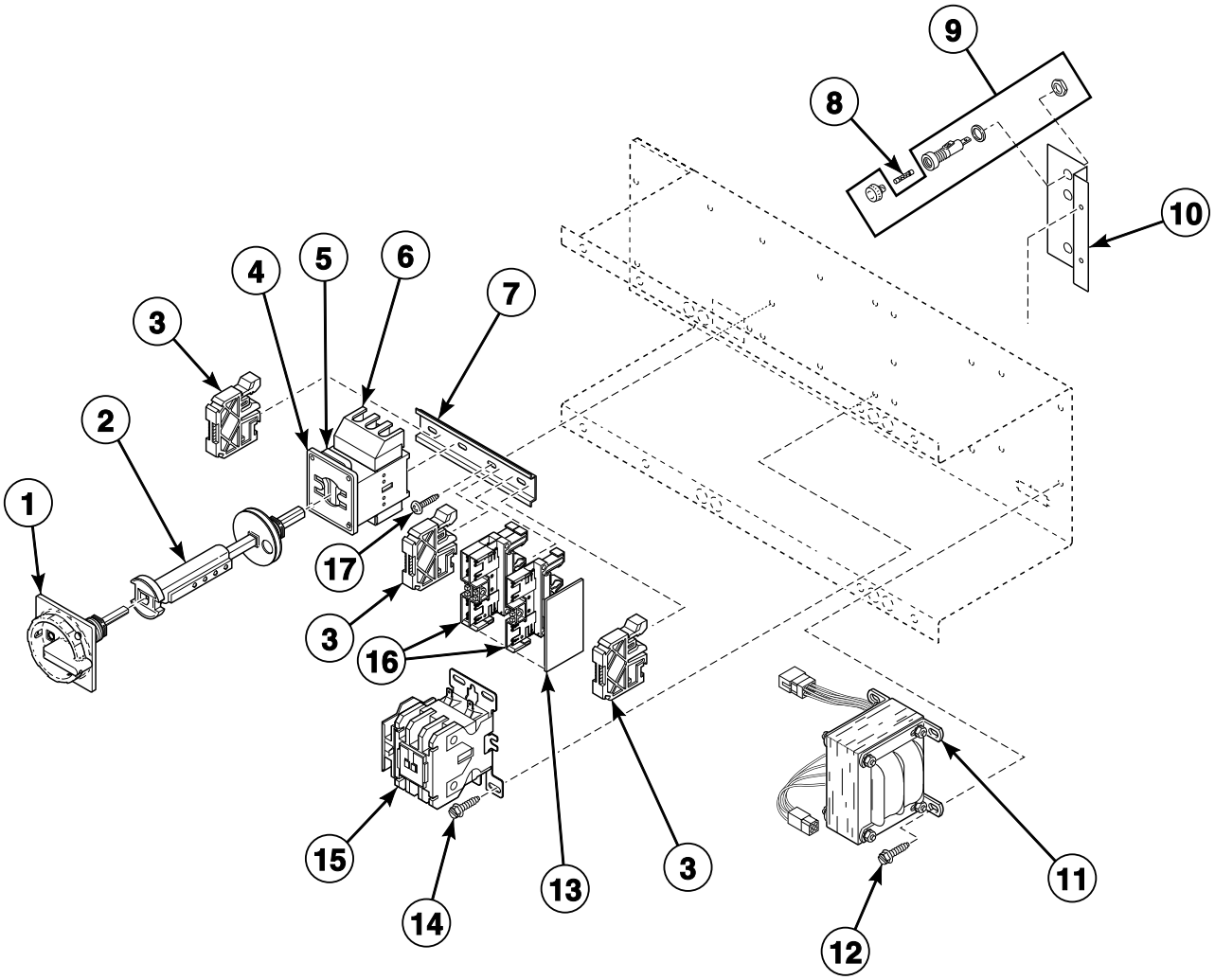

TMB2249P_70275601

© Copyright, Alliance Laundry Systems LLC – DO NOT COPY or TRANSMIT

Control Tray - CE Steam Models

REF	PART NO.	DESCRIPTION	COMMENTS
	M413863	Network Capacitor Assembly	3O, 3V, 3X, DO, DV, DX and OM control suffixes
	M413930P	Ferrite Core Assembly	3O, 3V, 3X, DO, DV, DX and OM control suffixes
	70113101	Steam Jumper Assembly	
	70120901	Jumper Disconnect Assembly	Terminal block to disconnect switch
	M413507	Jumper Configuration Assembly	230-240 Volt/50 or 60 Hertz/1 or 3 Phase
	M413508	Jumper Harness Assembly	380 Volt/50 Hertz/3 Phase
	M413509	Jumper Harness Assembly	400-415 Volt/50 Hertz/3 Phase
	M413510	Jumper Configuration Assembly	480 Volt/60 Hertz/3 Phase
	70083001P	Control Tray Harness Assembly	Control tray to fan motor and interlock harness
	70055901P	Power Wire Harness Assembly	1 Phase; Terminal block to transformer
	70120201P	Power Harness Assembly	3 Phase; Terminal block to transformer
1	M412208	Handle	
2	M412370	Extension Handle	20 Amp
3	70121001	End Stop	3 required
4	M412368	Door Interlock	
5	M412187P	Mounting Switch Base	20 Amp
6	M412366	Finger Guard	
7	N/A	Din Rail	
8	44310001	Fuse	380-415 Volt; 0.5 Amp; Primary fuse
	70406501	Fuse	1.25 Amp; Secondary fuse
	M413889	Fuse	4 Amp; Secondary fuse
	M413867	Fuse	2 Amp; Primary fuse on 240 Volt and less
9	D502591P	Fuse Holder Kit	All models
	M413544P	Fuse Holder	380-415 Volt
10	70123901	Fuse Bracket	230 Volt and lower
	70124001	Fuse Bracket	380 Volt and higher
11	M414228P	Transformer	200-240 Volt
	M414229P	Transformer	380-415 Volt
12	M411072	Screw	
13	70121101	End Cover	1 required
14	51780	Screw	
15	M413614P	Fan Contactor	
16	70120001	Terminal Block	3 required
17	430497	Screw	

N/A = Part no longer available

© Copyright, Alliance Laundry Systems LLC – DO NOT COPY or TRANSMIT

Control Tray - Non-CE Electric Models

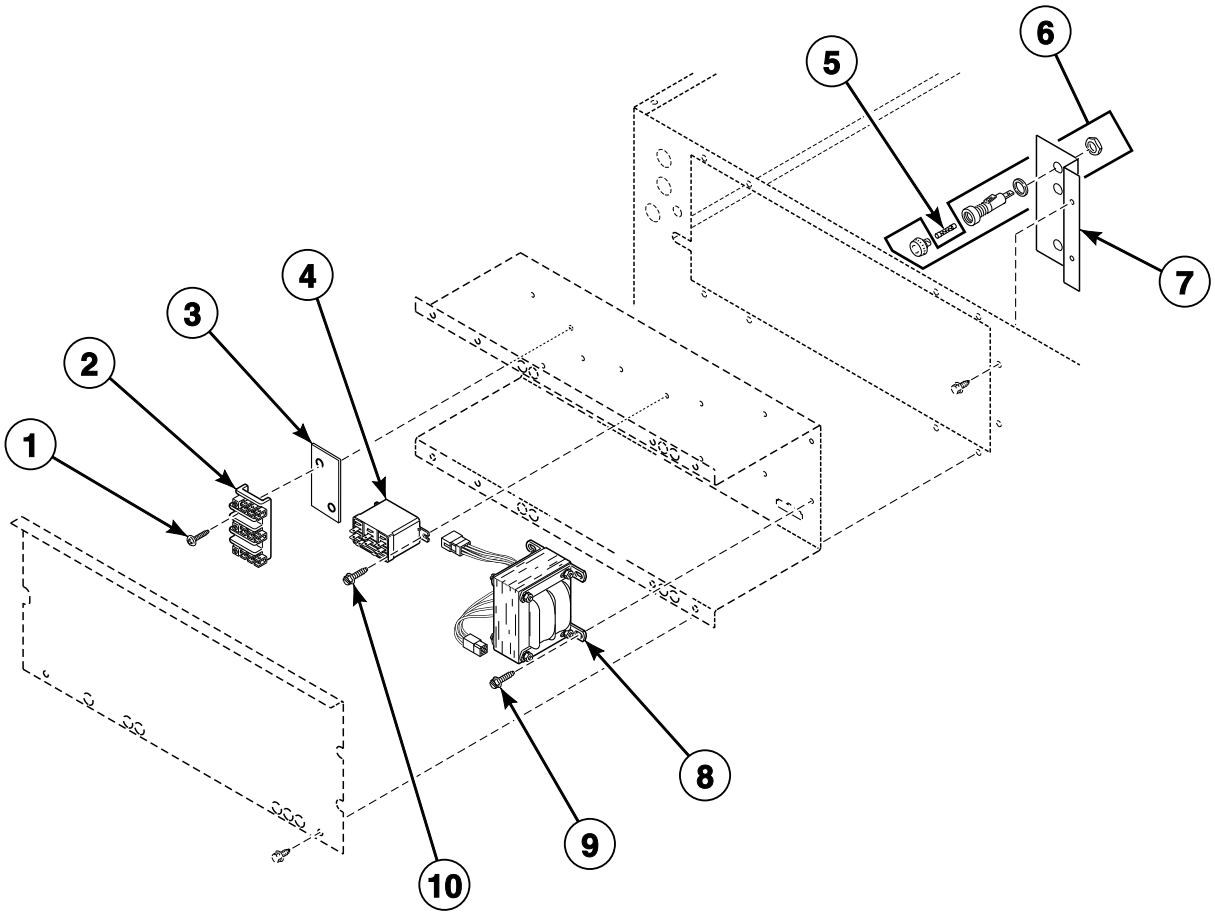

T406PZ3D_70275601

© Copyright, Alliance Laundry Systems LLC – DO NOT COPY or TRANSMIT

Control Tray - Non-CE Electric Models

REF	PART NO.	DESCRIPTION	COMMENTS
	M413863	Network Capacitor Assembly	3O, 3V, 3X, DO, DV, DX and OM control suffixes
	M413930P	Ferrite Core Assembly	3O, 3V, 3X, DO, DV, DX and OM control suffixes
	M402917	Screw	Green; Ground
	70083001P	Control Tray Harness Assembly	Fuse, transformer, motor switch relay coil and switch
	70055901P	Power Wire Harness Assembly	1 Phase; Terminal block to transformer
	70120201P	Power Harness Assembly	3 Phase; Terminal block to transformer
	70142501	Jumper Adapter Harness Assembly	
	70139101	Jumper Assembly	1 Phase; 1 required; 8 gauge; 11 inches
	44129201P	Jumper Harness	200-240 Volt
	M413505	Jumper Harness Assembly	208 or 240 Volt/60 Hertz/1 Phase
	M413506	Jumper Harness Assembly	208 Volt/60 Hertz/3 Phase
	M413507	Jumper Configuration Assembly	240 Volt/50 Hertz/1 Phase and 240 Volt/3 Phase
	M413508	Jumper Harness Assembly	380 Volt/50 Hertz/3 Phase
	M413509	Jumper Harness Assembly	415 Volt
	M413510	Jumper Configuration Assembly	480 Volt
1	M411072	Screw	
2	430642	Terminal Block	
3	M413862	Insulator	For terminal block
4	70210901P	Relay	1 Phase
	M413614P	Fan Contactor	3 Phase
5	44310001	Fuse	Primary; 0.5 Amp; 380-480 Volt
	M413118	Fuse	Primary; 2 Amp; Under 380 Volt
	M414232	Fuse	Secondary; 3.5 Amp; All other models
6	91024P	Fuse Receptacle	250 Volt; 380-480 Volt
	M413544P	Fuse Holder	600 Volt; Under 380 Volt
7	N/A	Fuse Bracket	250 Volt; 380-480 Volt
	70123801	Fuse Bracket	600 Volt; Under 380 Volt
8	M414228P	Transformer	200-240 Volt/50 or 60 Hertz
	M414229P	Transformer	380-480 Volt/50 or 60 Hertz
9	M405824	Screw	
10	51778	Screw	For motor relay
	430497	Screw	For motor contactor

N/A = Part no longer available

© Copyright, Alliance Laundry Systems LLC – DO NOT COPY or TRANSMIT

Control Tray - CE Electric Models

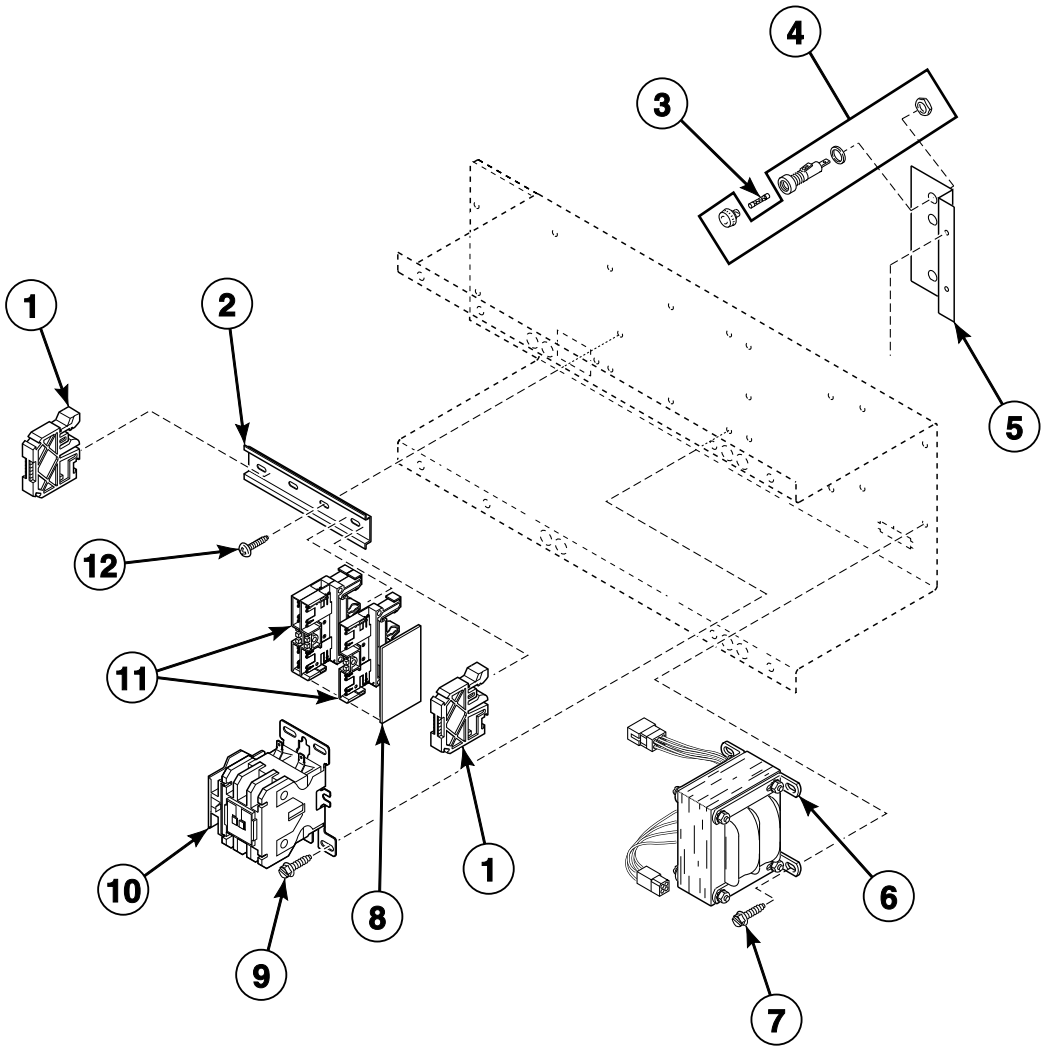

TMB2250P_70275601

© Copyright, Alliance Laundry Systems LLC – DO NOT COPY or TRANSMIT

Control Tray - CE Electric Models

REF	PART NO.	DESCRIPTION	COMMENTS
	M413863	Network Capacitor Assembly	3O, 3V, 3X, DO, DV, DX and OM control suffixes
	M413930P	Ferrite Core Assembly	
	M402917	Screw	Green; Ground
	70083001P	Control Tray Harness Assembly	Control tray to fan motor and interlock harness
	70055901P	Power Wire Harness Assembly	1 Phase; Terminal block to transformer
	70120201P	Power Harness Assembly	3 Phase; Terminal block to transformer
	70142501	Jumper Adapter Harness Assembly	Contactor coil
	M413507	Jumper Configuration Assembly	230-240 Volt/50 or 60 Hertz/1 or 3 Phase
	M413508	Jumper Harness Assembly	380 Volt/50 Hertz/3 Phase
	M413509	Jumper Harness Assembly	400-415 Volt/50 Hertz/3 Phase
1	70121001	End Stop	
2	N/A	Din Rail	
3	M413889	Fuse	4 Amp; Secondary
	44310001	Fuse	0.5 Amp; 380-415 Volt
	M413867	Fuse	2 Amp; 200-240 Volt
4	D502591P	Fuse Holder Kit	Always used on secondary on primary side of 230 Volt models
	M413544P	Fuse Holder	380-415 Volt
5	70123901	Fuse Bracket	Low voltage
	70124001	Fuse Bracket	High voltage
6	M414228P	Transformer	200-240 Volt/50 or 60 Hertz
	M414229P	Transformer	380-480 Volt/50 or 60 Hertz
7	70118801	Screw	
8	70121101	End Cover	
9	M411072	Screw	
10	M413614P	Fan Contactor	1 or 3 Phase
11	70120001	Terminal Block	
12	430497	Screw	

N/A = Part no longer available

© Copyright, Alliance Laundry Systems LLC – DO NOT COPY or TRANSMIT

Accessory Box - Non-CE Electric Models - 240 Volt and Lower

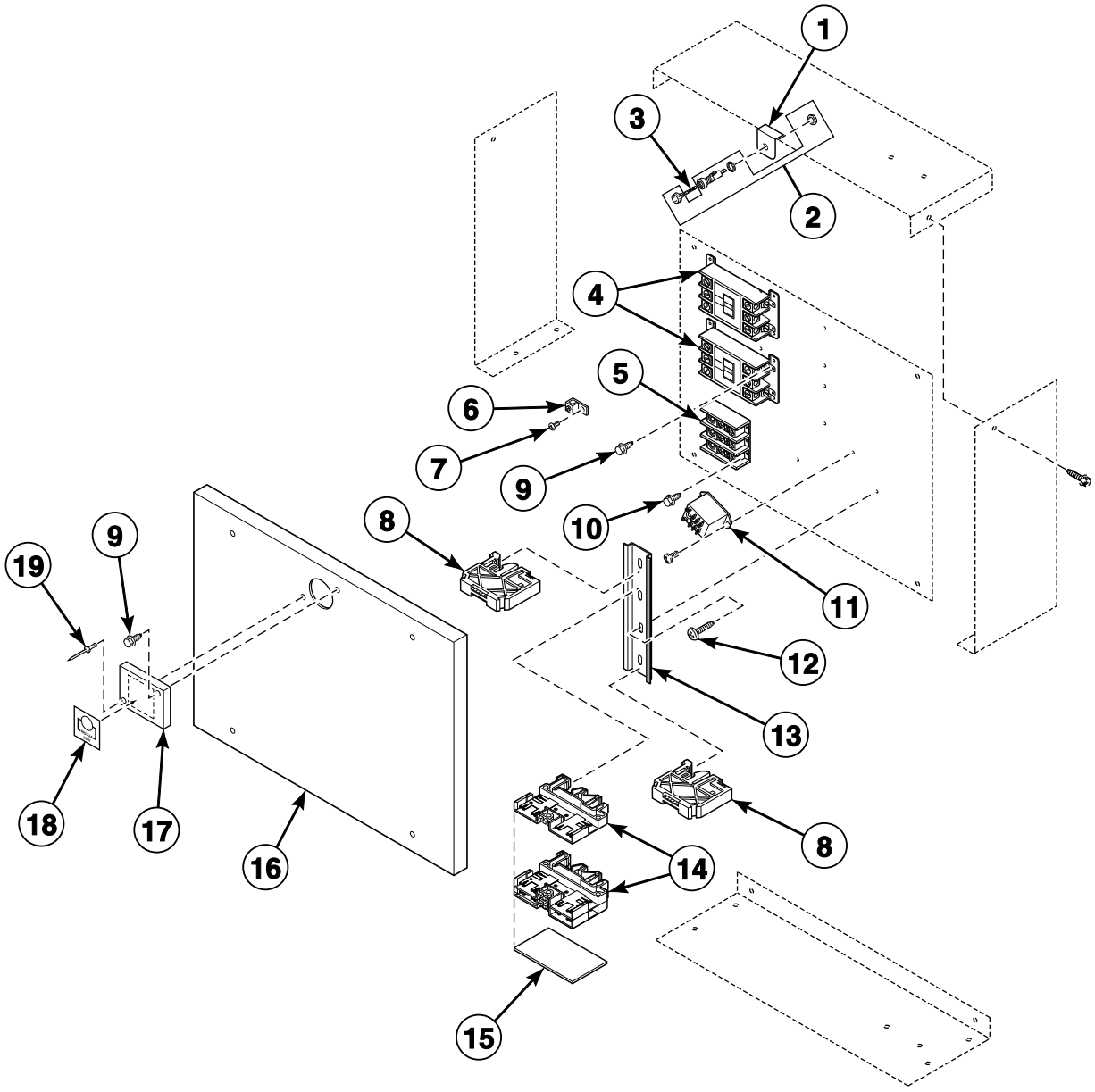

© Copyright, Alliance Laundry Systems LLC – DO NOT COPY or TRANSMIT

Accessory Box - Non-CE Electric Models - 240 Volt and Lower

REF	PART NO.	DESCRIPTION	COMMENTS
	M4793P3	Coil Booster Kit	Models through Serial No. 0303016594
	M413930P	Ferrite Core Assembly	3O, 3V, 3X, DO, DV, DX and OM control suffixes
	70292901	Power Buss Harness	Models through Serial No. 0303016594
	70293101	Electric Harness	Models through Serial No. 0303016594
	70294501	Jumper Harness Assembly	Models through Serial No. 0303016594
	M414121	Jumper Cable Assembly	8 gauge; 6.75 inches; 6 required for 230 Volt/1 or 3 Phase; Models through Serial No. 0303016594
	70138901	Jumper Assembly	2 gauge; 7.5 inches; 2 required for 230 Volt/50 Hertz/1 Phase; Models through Serial No. 0303016594
	70139001	Jumper Assembly	8 gauge; 10 inches; 3 required for 200-240 Volt/3 Phase; 2 required for 1 Phase; 3 required for 3 Phase; Models through Serial No. 0303016594
	M413933	Jumper Cable Assembly	8 gauge; 7.5 inches; 3 required for 200-240 Volt/3 Phase; 1 required for 1 Phase; Models through Serial No. 0303016594
1	70294001	Fuse Holder Bracket	Models through Serial No. 0303016594
2	91024P	Fuse Receptacle	Models through Serial No. 0303016594
3	M414240	Fuse	Models through Serial No. 0303016594
4	70293201P	Electric Contactor	2 required; Models through Serial No. 0303016594
	M4919P3	Electric Heater Contactor Kit	Models starting Serial No. 0303016595
5	M413865	Power Distribution Block	3 pole
6	M411283	Ground Lug Connector	
7	M402917	Screw	
8	70121001	End Stop	2 required; Models through Serial No. 0303016594
9	430497	Screw	
10	39733	Screw	
11	M412534	Relay	Models through Serial No. 0303016594
12	D501086	Screw	2 required; Models through Serial No. 0303016594
13	M412694	Din Rail	2 inches; Models through Serial No. 0303016594
14	M412632	Terminal Block	2 required; Models through Serial No. 0303016594
15	M412633	End Barrier	
16	N/A	Accessory Box Cover	
17	70294601	Fuse Cover	Models through Serial No. 0303016594
18	70294301	Fuse Label	Models through Serial No. 0303016594
19	70058501	Pop Rivet	Models through Serial No. 0303016594

N/A = Part no longer available

© Copyright, Alliance Laundry Systems LLC – DO NOT COPY or TRANSMIT

Accessory Box - Non-CE Electric Models - 380 Volt and Higher

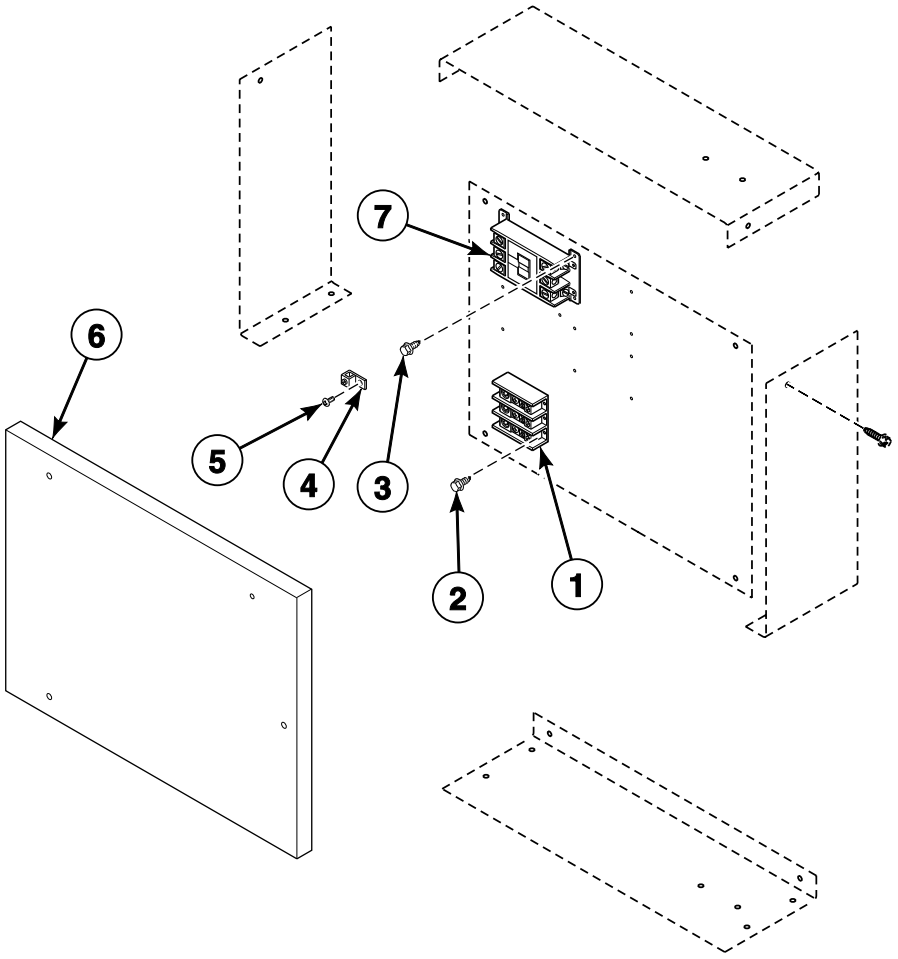

TMB2187P_70275601

© Copyright, Alliance Laundry Systems LLC – DO NOT COPY or TRANSMIT

Accessory Box - Non-CE Electric Models - 380 Volt and Higher

REF	PART NO.	DESCRIPTION	COMMENTS
	70139401	Power Harness Assembly	
	M413930P	Ferrite Core Assembly	3O, 3V, 3X, DO, DV, DX and OM control suffixes
	M413934	Jumper Cable Assembly	8 gauge; 8 inches; 3 required for 380 or 415 Volt/3 Phase
1	M413865	Power Distribution Block	3 pole
2	39733	Screw	
3	430497	Screw	
4	M411283	Ground Lug Connector	
5	M402917	Screw	
6	N/A	Accessory Box Cover	
7	70343301P	Contactor	May require 44137901 DIN Rail to properly mount

N/A = Part no longer available

© Copyright, Alliance Laundry Systems LLC – DO NOT COPY or TRANSMIT

Accessory Box - CE Electric Models - 240 Volt and Lower

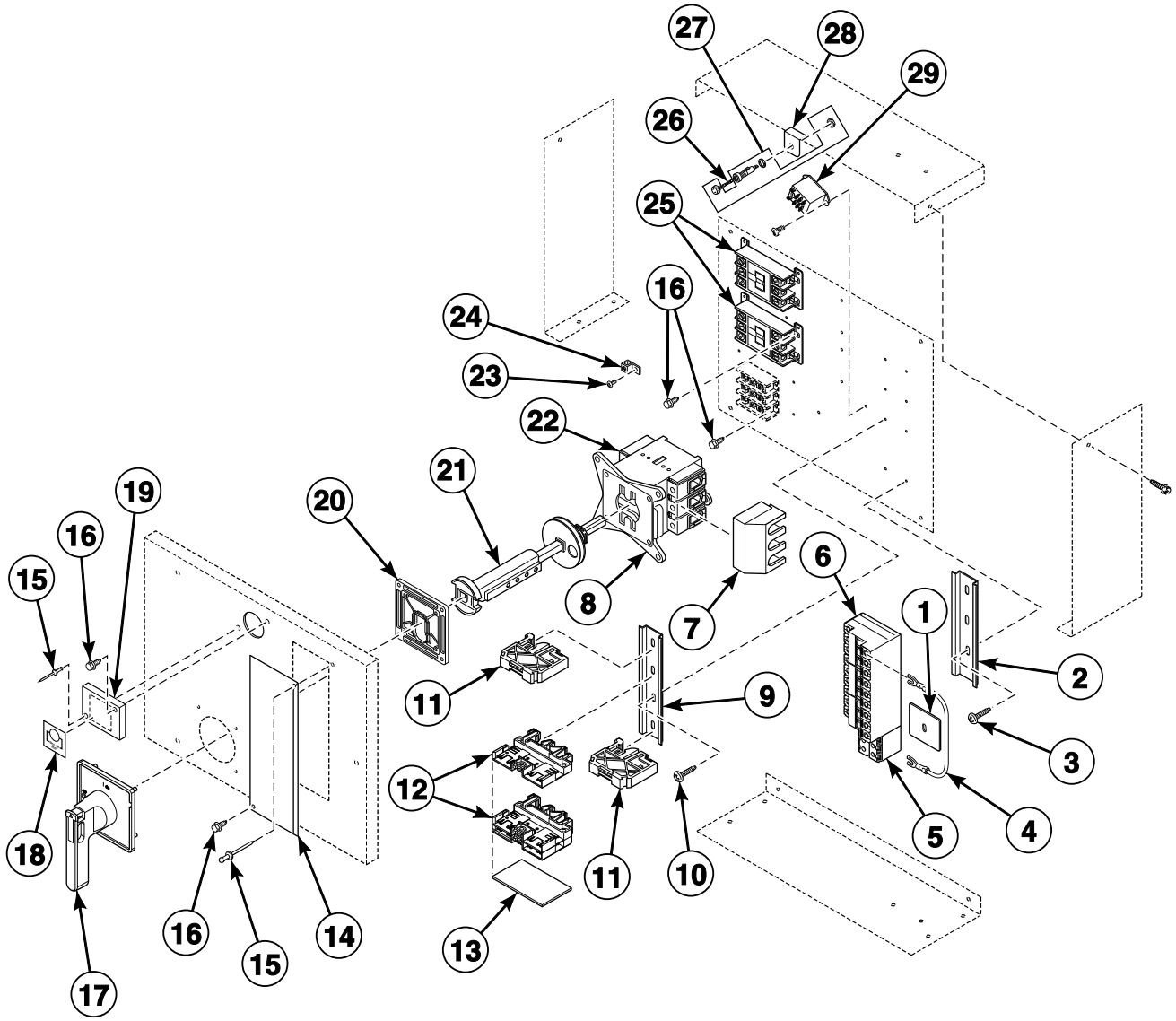

TMB2189P_70275601

© Copyright, Alliance Laundry Systems LLC – DO NOT COPY or TRANSMIT

Accessory Box - CE Electric Models - 240 Volt and Lower

REF	PART NO.	DESCRIPTION	COMMENTS
	70292901	Power Buss Harness	
	70293101	Electric Harness	
	70294501	Jumper Harness Assembly	
	70138901	Jumper Assembly	2 gauge; 7.5 inches; 2 required for 230 Volt/50 Hertz/1 Phase
	M414121	Jumper Cable Assembly	8 gauge; 6.75 inches; 6 required for 230 Volt/1 or 3 Phase
	70138801	Jumper Assembly	6 gauge; 8 inches; 3 required for 3 Phase
	M4793P3	Coil Booster Kit	Models through Serial No. 0303016594
1	44014901P	Power Distribution Block Cover	
2	N/A	Din Rail	380-415 Volt/50 Hertz/3 Phase; 5 inches
	M412693	Din Rail	380-415 Volt/50 Hertz/3 Phase; 6.5 inches
3	430497	Screw	
4	M413933	Jumper Cable Assembly	7.5 inches; 3 required for 200 or 240 Volt/3 Phase models
5	M413865	Power Distribution Block	230 Volt/50 Hertz/1 Phase
6	M412401	Circuit Breaker	230 Volt/50 Hertz/1 Phase; 8 Amp
	M412402	Circuit Breaker	25 pound models; 230 Volt/50 Hertz/1 or 3 Phase; 32 Amp
	M412406	Circuit Breaker	30 pound models; 230 Volt/50 Hertz/1 or 3 Phase; 40 Amp
	M412408P	Circuit Breaker	35 pound models; 230 Volt/50 Hertz/1 or 3 Phase; 50 Amp
7	M412367	Finger Guard	
8	M412369	Door Interlock	
9	M412694	Din Rail	2 inches; Models starting Serial No. 0303016595
10	D501086	Screw	2 required; Models starting Serial No. 0303016595
11	70121001	End Stop	2 required; Models starting Serial No. 0303016595
12	M412632	Terminal Block	2 required; Models starting Serial No. 0303016595
13	M412633	End Barrier	
14	70133901	Electrical Box Access Cover	
15	70058501	Pop Rivet	
16	51780	Screw	
17	70268001	Handle	
18	70294401	Fuse Label	Models starting Serial No. 0303016595
19	70294601	Fuse Cover	Models starting Serial No. 0303016595
20	N/A	Disconnect Switch Gasket	
21	M412371P	Extension Handle	100 Amp
22	M412186	Mounting Switch Base	100 Amp
23	M402917	Screw	
24	M411283	Ground Lug Connector	
25	70293201P	Electric Contactor	2 required for models starting Serial No. 0303016595
	M4919P3	Electric Heater Contactor Kit	2 required for models through Serial No. 0303016594
26	M414104	Fuse	Models starting Serial No. 0303016595
27	D502591P	Fuse Holder Kit	Models starting Serial No. 0303016595
	D502811	Fuse Carrier	Models starting Serial No. 0303016595
28	70294801	Fuse Holder Bracket	Models starting Serial No. 0303016595
29	M412534	Relay	Models starting Serial No. 0303016595

N/A = Part no longer available

© Copyright, Alliance Laundry Systems LLC – DO NOT COPY or TRANSMIT

Accessory Box - CE Electric Models - 380 Volt and Higher

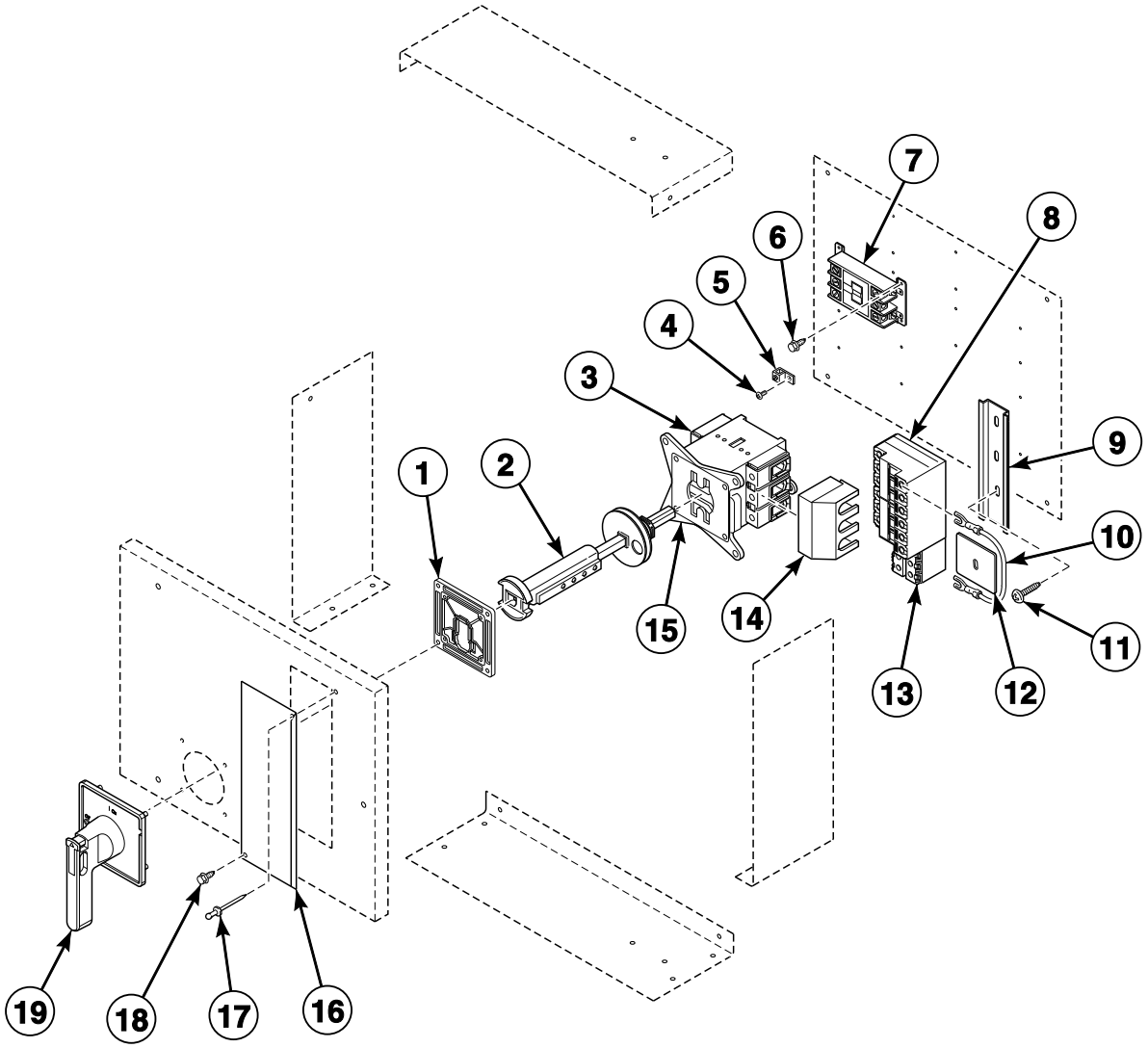

TMB2188P_70275601

© Copyright, Alliance Laundry Systems LLC – DO NOT COPY or TRANSMIT

Accessory Box - CE Electric Models - 380 Volt and Higher

REF	PART NO.	DESCRIPTION	COMMENTS
	70139401	Power Harness Assembly	
	70138801	Jumper Assembly	6 gauge; 8 inches; 3 required for 3 Phase
1	N/A	Disconnect Switch Gasket	
2	M412371P	Extension Handle	100 Amp
3	M412186	Mounting Switch Base	100 Amp
4	M402917	Screw	
5	M411283	Ground Lug Connector	
6	51780	Screw	
7	70343301P	Contactor	May require 44137901 DIN Rail to properly mount
8	M412407P	Circuit Breaker	380-415 Volt/50 Hertz/3 Phase; 8 Amp
9	N/A	Din Rail	
10	M413934	Jumper Cable Assembly	8 inches; 3 required for 380 or 415 Volt/3 Phase models
11	430497	Screw	
12	44014901P	Power Distribution Block Cover	
13	M413865	Power Distribution Block	380-415 Volt/50 Hertz/3 Phase
14	M412367	Finger Guard	
15	M412369	Door Interlock	
16	70133901	Electrical Box Access Cover	
17	70058501	Pop Rivet	
18	51780	Screw	
19	70268001	Handle	

N/A = Part no longer available

© Copyright, Alliance Laundry Systems LLC – DO NOT COPY or TRANSMIT

Notes

© Copyright, Alliance Laundry Systems LLC – DO NOT COPY or TRANSMIT

Parts Index

A

Adapter
70131901 71

Adhesive
D511637P 49

Adjustable Buzzer
D505447 15

Air Filter
70036001 75

Airflow Switch
70267301 61

Airflow Switch Bracket
70266301 61

Airflow Switch Cover
70281801 61

Airflow Switch Kit
70270901P 61

Airflow Switch Vane
70266201 61

Axial Plate
70194501 57

B

Baffle
70022301 51

Baffle Gasket
70015701 51
70015702 51
70015703 51

Bearing Housing Bracket
70021401 67

Belt
70276202P 57
70276203P 57
70276205P 57

Belt Tension Tool Kit
M4853P3 57

Blower Assembly
70359801P 59

Blower Housing Scroll
70016301 59

Blower Motor
70337501P 59
70342601P 59

Blower Motor Kit
70337701P 59

Blower Motor Mounting Plate
70012001 59

Bolt
70062401 ..... 57, 59
70392801 49

Bumper Pad
56128 ..... 77, 79

Burner Grill
70188801 ..... 63, 65

Burner Orifice
70684100 69
70684108 69
70684110 69
70684112 69
70684114 69
70684115 69
70684116 69
70684117 69
70684118 69
70684120 69
70684132 69
70684134 69
70684135 69
70684136 69
70684138 69
70684140 69
70684142 69
70684143 69
70684146 69
70684147 69
70684148 69

Bushing
70027701 57

C

Cable Heater Assembly
70138601P 73
70138701 73

Card Reader
39685P 21

Card Reader and Bracket Assembly
D510068P 25, 33

Card Reader Harness Assembly
431613 21
70211801 33

Card Reader Network Harness Assembly
70206601 33

Card Reader Overlay
70334201 27
70334301 27

Center Cylinder Seal
70066003 ..... 49, 51
70066004 ..... 49, 51

Circuit Board Support
34896 ..... 7, 11

Circuit Breaker
M412401 93
M412402 93
M412406 93
M412407P 95
M412408P 93

Clevis Pin
70389201 75

Clip
70226701 51

Coil Booster Kit
M4793P3 ..... 89, 93

Coil Spring
M402455 9

Coin Carrier Spring
M405138A 9

N/A items do not appear in index.

© Copyright, Alliance Laundry Systems LLC – DO NOT COPY or TRANSMIT

Coin Chute Assembly
70296401 51
Coin Cover Overlay
70246301 23
Coin Drop
38963P 29
39748 29
70256402P 29
70441601P 29
Coin Drop Assembly
210195 29
210196 29
38462P 29
38463 29
38464P 29
38467 29
38472 29
38475 29
38519 29
38521 29
39157 29
44039701P 15
44039702 15
44039703 15
44039704 15
44039705 15
44039706 15
44039707 15
70283102 29
70441602 29
Coin Drop Kit
CK077 29
Coin Identification Paper
38725 29
Coin Meter
M412546 9
70112501P 9
70112701P 9
70137301P 9
70137401P 9
70151301 9
70262401 9
Coin Meter Drive
M400754 9
Coin Retainer Spring
M406297 9
Coin Vault Assembly
70180101 51
Coin Vault Harness Assembly
70083801 51
Coin Vault Trim
70117501 45
70117502 45
Communication Board
210095P 37
210097 37
Communication Wire Harness Assembly
800246 37
Contact Block
44018701 47
Contactor
70343301P 95
71343301P 91
Control Assembly
D511867P 23, 25, 27
70462361P 13
Control Harness Assembly
70055801P 19, 21
Control Kit
D505905P 31, 33
M414049P 19, 21
70228401P 17
Control Panel
70121301B 43
70121301* 43
70121302 43
70121305* 43
70121309 43
70121501B 43
70121501* 43
70121508 43
70273301* 43
70273302 43
70273303* 43
70273304 43
70273401* 43
70273402 43
70273403* 43
70273404 43
Control Panel Harness
70179801 7
70179901P 11
70271401 15
70271501 15
70279801 13
70364701P 13
Control Panel Harness Assembly
70082701P 19, 21
70082801P 17
70082901 17
70206301P 23, 25, 27, 31, 33
70235801 ..... 23, 25, 27, 31, 33
70280901 13
70364801P 13
Control Panel Kit
70121401*P 43
70121402P 43
70121601*P 43
70121602P 43
Control Plate Assembly
44040901 15
44041001 15
70175801 19
70175802 21
70175803 11
70175804 7
70175805 17
70175806 17
70175807 ..... 23, 31
70497201 ..... 25, 27, 33
Control Plate Kit
44050701P 13
70291001P 25
Control Tray Harness Assembly
70083001P 77, 79, 81, 83, 85, 87
Control Trim
44016401 43
70529402 43
Cylinder Bearing Stud Plate
430351 49
Cylinder Bearing Stud Plate Assembly
430352 49

N/A items do not appear in index.

© Copyright, Alliance Laundry Systems LLC – DO NOT COPY or TRANSMIT

Cylinder Guide Tool
263P4 49
Cylinder Motor Harness Assembly
70083701 57
Cylinder, Trunnion and Seal Kit
70221901P 49
70221902P 49
70222001P 49
70222002P 49
70222101P 49
70222102P 49

D

Damper and Hinge Exhaust Assembly
70209501 59
Damper Spacer
70220901 59
Data Connector, 3 Circuit
210155 37
Din Rail
M412693 93
M412694 ..... 89, 93
DIN Valve Adapter Kit
F8382301 75
Door Assembly
44046701 39
44058001P 39
70176503 39
70212200 39
70212300 39
Door Catch Assembly
D510177 55
Door Glass
M400784P 39
70133601P 39
Door Glass Installation Tool
M4221P4 39
Door Glass Seal Kit
70211901P 39
Door Handle
M400133 39
430117 39
44007902P 39
44057701 39
Door Handle Wedge
D510129W 55
Door Hinge
70115901* 39
70115902 39
70116003* 39
70116006 39
Door Hinge Lug Assembly
44035001 ..... 39, 55
Door Interlock
M412368 ..... 79, 83
M412369 ..... 93, 95
Door Latch
M401223 45
Door Pull and Wedge Kit
D510103*P 55
Door Ring and Handle Assembly
44043501 39
Door Ring Gasket
70296801 39
Door Strike
D510181 55
Door Switch
70125101 45
Door Switch Actuator Kit
70215001P 39
Door Switch Bracket
70119301 45
Drive Access Cover
70144601 59
Drive Motor
70337801P 57
70338101P 57
Drive Motor Harness
70053601P 57
Drive Motor Kit
70337901P 57
70338001P 57
Drywall Screw Magnet Kit
70343101P 49

E

Elbow
70079601 71
70208701 69
Electric Contactor
70293201P 89, 93
Electric Harness
70293101 ..... 89, 93
Electric Heater Contactor Kit
M4919P3 ..... 89, 93
Electrical Box Access Cover
70133901 ..... 93, 95
Electronic Coin Control Kit
M4686P3 19
Electronic Coin Drop Assembly
70294103P 29
70294104 29
70294107 29
70294110 29
70513306 29
70513311 29
Electronic Coin Drop Harness
44065801 29
Electronic Coin Drop Kit
CK099 29
CK100 29
CK101 29
CK103 29
CK108 29
CK109 29
CK113 29
CK115 29
CK116 29
CK117 29
CK118 29
CK502 29
Electronic Control
44037801P 15
Electronic OPL Control Kit
M4689P3 17

N/A items do not appear in index.

© Copyright, Alliance Laundry Systems LLC – DO NOT COPY or TRANSMIT

M4695P3 17
Emergency Stop Harness
70364102 47
Emergency Stop Label
44012901 47
Emergency Stop Switch Harness Assembly
70083901 47
End Barrier
M412633 ..... 89, 93
End Cap
70070101 49
End Cover
70121101 ..... 79, 83, 87
End Stop
70121001 ..... 79, 83, 87, 89, 93
Exhaust Thimble
70015601 59
70017801 59
Expansion Clip
70030501 45
Extension Handle
M412370 ..... 79, 83
M412371P 93, 95

F

False Front
70000501*P 41
70000502 41
70021101*P 41
70024202P 41
False Front Assembly
70021102P 41
70024001*P 41
70024002P 41
70024201*P 41
Fan Contactor
M413614P 77, 79, 81, 83, 85, 87
Fan Motor Harness Assembly
70083401 59
70083501 59
Ferrite Core Assembly
M413930P 17, 77, 79, 81, 83, 85, 87, 89, 91
Finger Guard
M412366 ..... 79, 83
M412367 ..... 93, 95
Flat Top
70557601 51
70557701 51
Front Panel Assembly
70176201*P 41
70176202P 41
70176203*P 41
70176204P 41
70176205LP 41
70176206P 41
70176207*P 41
70176208 41
70176210 41
70176301*P 41
70176302 41
70176303* 41
70176304 41
70176305*P 41
70176306 41
70176307*P 41
70176308 41
70176309* 41
70176310P 41
Front Panel Insulation
70155301 45
70155401 45
Front Panel Seal
70173401P 41
Fuse
M413118 ..... 77, 81, 85
M413867 ..... 79, 83, 87
M413889 ..... 79, 83, 87
M414104 93
M414232 ..... 77, 79, 81, 85
M414240 ..... 77, 79, 81, 89
44310001 ..... 77, 79, 81, 83, 85, 87
70406501 ..... 17, 23, 25, 27, 31, 33, 83
Fuse Bracket
70123801 ..... 77, 81, 85
70123901 ..... 79, 83, 87
70124001 ..... 79, 83, 87
Fuse Carrier
D502811 93
Fuse Cover
70294601 ..... 89, 93
Fuse Holder
M413544P 77, 79, 81, 83, 85, 87
Fuse Holder Bracket
70294001 89
70294801 93
Fuse Holder Kit
D502591P 79, 83, 87, 93
Fuse Label
70294301 89
70294401 93
Fuse Receptacle
91024P 77, 81, 85, 89

G

Gas Burner
70229801P 63
Gas Line Assembly
70271201 69
Gas Shut-Off Valve
M412562P 71
Gas Valve Bracket
70429801 69
Gas Valve Coil
70260101 71
Gas Valve Cover
70271101 69
Gas Valve Harness
70184001 71
Gas Valve Kit
70482301 71
Gasket
70247601 55
70289101P 53
Graphic Overlay
44050501 13
44050502 13

N/A items do not appear in index.

© Copyright, Alliance Laundry Systems LLC – DO NOT COPY or TRANSMIT

44240501 13
Ground Lug Connector
M411283 ..... 89, 91, 93, 95

H

Hairpin Cotter
70389301 75
Handle
M412208 ..... 79, 83
70268001 ..... 93, 95
Handle and Caps Assembly
70154401 53
70154402 53
70154403 53
70154404 53
Harness Assembly
M412997 69
Harness Strap
55881 65
Heater Element
70034401P 73
70034402P 73
70034403P 73
70034404P 73
70034405P 73
70034406P 73
70034413P 73
70034414P 73
70034415P 73
70034416P 73
High Voltage Lead
70006201 ..... 77, 79
High Voltage Suppression Cable
44239702 ..... 77, 79
Hinge Cam Kit
M4772P3 39
Hinged Door
70267701*P 55
Hold-Down Clip
35865 51
Hole Plug
44024201 39
70063201 51

I

Idler Pivot Bracket
70200901 57
Idler Wheel Assembly
70050401P 57
Igniter Cover
70159601 63
Ignition Control Harness
70083301P 77, 79
Ignition Control Harness Assembly
70083201 77
Ignition Control Kit
70492701 77
70492801 ..... 77, 79
Indicator Light
70082201 ..... 7, 11
Insulator
M413862 ..... 77, 81, 85

J

Jumper Adapter Harness Assembly
70142501 ..... 85, 87
Jumper Assembly
70138801 ..... 93, 95
70138901 ..... 89, 93
70139001 89
70139101 85
Jumper Bar
70066501 73
Jumper Bypass Assembly
70084001 ..... 25, 27, 51
Jumper Cable Assembly
M413933 ..... 89, 93
M413934 ..... 91, 95
M414121 ..... 89, 93
Jumper Calibration Assembly
70084201 ..... 19, 21
70084301 17
70084303 17
70211701 ..... 23, 25, 27, 31, 33
70211702 ..... 23, 25, 27, 31, 33
Jumper Configuration Assembly
M413507 ..... 77, 79, 81, 83, 85, 87
M413510 ..... 77, 79, 81, 83, 85
70084101 ..... 7, 11
70084102 ..... 7, 11
Jumper Disconnect Assembly
70120901 ..... 79, 83
Jumper Harness
44129201P 85
Jumper Harness Assembly
M413504 ..... 77, 81
M413505 ..... 77, 81, 85
M413506 ..... 77, 79, 81, 85
M413508 ..... 77, 79, 81, 83, 85, 87
M413509 ..... 77, 79, 81, 83, 85, 87
70294501 ..... 89, 93
Jumper Set Assembly
44042701 15
44042801 15
Jumper Wire Assembly
M412645 23

K

Key
70144101 59
70155601 43
70155602 45
Kickplate
70117601 53
70117602 53
70117603 53
70117604 53
Knob
M410927 11
44020501 ..... 7, 11

N/A items do not appear in index.

© Copyright, Alliance Laundry Systems LLC – DO NOT COPY or TRANSMIT

L

Leveling Leg
34319 51

Limit Thermostat
D510701 65
M409219 ..... 63, 65
M409433 73
M409443 73
M410542 ..... 63, 73
M411307 59
70299001 65

Lint Panel Assembly
70176601*P 53
70176602P 53
70176604 53
70176605* 53
70176606 53
70176608 53
70176701QP 53
70176702P 53
70176704 53
70176705* 53
70176707* 53

Lint Panel Switch Bracket
70277301 51

Lint Screen
70290401 51

Lint Screen Clip
70054501 51

Lint Switch Bracket Assembly
70283701 55

Lock, Key and Nut Kit
44089301P 43
44089302P 45

L.P. Conversion Kit
M4699P3 69
M4703P3 69
M4706P3 69
M4711P3 69

L.P. Valve
70457302P 71

M

Main Interlock Harness
70277801 51

Male Tab Terminal
00177 ..... 13, 15

Manual Reset Thermostat
M411941 63
M411945 59
70186301 ..... 63, 65

Manual Timer Control Kit
M4690P3 11

Membrane Switch
M414368P 17
44037901P 15
44039402P 15

Motor Bracket Spring
70051401 57

Motor Pivot Shaft
70187801 57

Motor Pulley
70284201 57
70284202 57
70284203 57
70284204 57

Mounting Bracket
70063501 17
70080701 ..... 7, 11
70178901 ..... 7, 11

Mounting Plate
70208801 ..... 25, 27, 33

Mounting Switch Base
M412186 ..... 93, 95
M412187P 79, 83

Multiplier Harness Assembly
431611 19

N

Nameplate
39564 23
44046801 43
44046901 43
44046903 43
44062901 43
44063001 43
44063002 43
44063003 43
44104301 43
44104302 43
44104303 43
70243901 43

Nameplate Bezel
70117401 43

Nameplate Overlay
70115601 43
70128301 43

Network Board
210157P 37

Network Board Assembly
210016P 35

Network Cable
210165 37

Network Capacitor Assembly
M413863 ..... 77, 79, 81, 83, 85, 87

Network Plug Support
70201401 35

Network Wire Harness Assembly
800217 35

Nut
M400022 ..... 49, 59
M400034 ..... 49, 59
M400977 11
M400979 61
M414215 39
21899 51
23951 53
29786 ..... 13, 57
29787 ..... 13, 15
430576 51
44087201 ..... 49, 57, 59
44088801 ..... 43, 45
51236 53
56156 ..... 57, 59
70054 ..... 7, 11, 15, 17, 19, 21, 23, 25, 27, 31, 39, 73

N/A items do not appear in index.

© Copyright, Alliance Laundry Systems LLC – DO NOT COPY or TRANSMIT

70072901 45
70142 57
N.G. Valve
70457301P 71

O

Opto Coupler
200674P 29
Orifice Adapter
70379301 69
Orifice Adapter Kit
70391601P 69
Orifice Holder Bracket
70248901 69
Orifice Keeper Bracket
70249001 69
O-Ring
431482 71
Overlay
70113501 7
70113701 19
70114101 19
70114201 11
70114301 7
70114501 11
70115801 17
70128001 19
70128501 19
70128701 17
70129501 23
70129601 23
70130101 19
70130401 17
70130601 17
70130801 19
70131001 7
70134801 7
70134901 11
70173601 19
70184301 31
70184302 31
70184401 33
70239601 31
70239602 31
70245901 11
70257701 23
70257702 23
70257703 ..... 25, 27
70258001 23
70258002 23
70258003 ..... 25, 27
70259001 23
70261001 23
70261002 23
70261003 25
70261201 23
70261202 23
70266701 25
70266801 25
70275401 25
70286701 23
70321001 23

P

Panel
70255801*P 55
Panel Locator
56079 ..... 45, 53, 59
Partition Baffle
70015201 51
70022001 51
70022101 51
PC Board Standoff
210098 37
Pin
70071401 39
Pipe Clip
70203701 65
Pipe Nipple
431486 ..... 69, 71
70139601 71
Pop Rivet
M400003 45
M405750 69
70058501 ..... 49, 51, 75, 89, 93, 95
70126301 53
70126401 53
Power Buss Harness
70292901 ..... 89, 93
Power Distribution Block
M413865 ..... 89, 91, 93, 95
Power Distribution Block Cover
44014901P 93, 95
Power Harness Assembly
70120201P 77, 79, 81, 83, 85, 87
70139401 ..... 91, 95
Power Wire Harness Assembly
70055901P 77, 79, 81, 83, 85, 87
Primary Air Adjustment Sleeve
70239801 71
Pushbutton
44018801 47
Pushbutton Switch
M413431 ..... 77, 79
70413301 ..... 19, 21, 23, 25, 27, 31, 33, 45, 51

R

Rear Cylinder Bearing Housing
70013901 49
Rear Cylinder Channel
70257101 49
70257301 49
Rear Cylinder Channel Plate
70257201 49
70257401 49
Rear Cylinder Seal
70013701P 49
70013702 49
Rear Cylinder Seal Support
70506401 49
70506402 49
Rear Limit Harness
70297001 65

N/A items do not appear in index.

© Copyright, Alliance Laundry Systems LLC – DO NOT COPY or TRANSMIT

Relay
M412534 ..... 11, 13, 15, 17, 89, 93
70210901P 77, 81, 85
Relay/Buzzer Bracket
44041701 ..... 13, 15
Replacement Door Handle Kit
70133501P 39
Replacement Gas Valve Kit
M4969P3 69
M4971P3 69
Retaining Ring
70023601 51
Return Spring
M405138B 9
Roller and Seal Kit
70616701 51
Roller Catch Arm
70030301 53
Roller Catch Spacer
70030201 53
Roller Catch Wheel
70297601 53
Roller Shaft
70017701 51
Rotary Coin Drop Control Kit
M4688P3 7
Rotary Drop Shroud
70061701 7
Rotation Sensor Bracket
44044401 67
Rotation Sensor Cover
44044301 67
Rotation Sensor Kit
7009P 67

S

Screw
D501086 ..... 89, 93
D501524 ..... 19, 21, 23, 25, 27, 31, 33, 39
M400661 39
M401938 ..... 45, 61
M402797 ..... 11, 13, 15, 17
M402917 ..... 77, 79, 81, 85, 87, 89, 91, 93, 95
M405188 65
M405824 ..... 77, 81, 85
M409385 39
M411072 ..... 59, 81, 83, 85, 87
05161 63
23222 71
33562 ..... 77, 79
38272 ..... 77, 79
39733 ..... 45, 53, 57, 89, 91
430497 ..... 35, 45, 49, 51, 59, 63, 65, 69, 71, 73, 79, 81, 83, 85, 87, 89, 91, 93, 95
430648 57
430756 39
430757 ..... 39, 53
44023301 39
44041301 11
51778 ..... 77, 81, 85
51780 ..... 61, 63, 77, 79, 83, 93, 95
61199 39
62588 49
70033502 39
70033504 55
70072801 53
70118801 ..... 77, 79, 87
70126101 59
70132301 ..... 45, 53
70153301 67
70566401 57
Secondary Stove Limit Kit
70299101 ..... 59, 65
Shadow Box Clip
M400972 ..... 7, 43
Side Panel
70253801*P 51
70253901*P 51
Side Panel Assembly
70021501*P 51
Sleeve
44050601 13
Slot Card Plate Assembly
44089501 27
Snap Bushing
M400770 69
Solenoid Valve DIN Connector
70370301P 75
Spark Electrode
70032801P 63
Spud Adapter
70223501 71
Start Switch
70108501 ..... 7, 11
Steam Coil
70231301P 75
Steam Filter Holder
70369301 75
Steam Jumper Assembly
70113101 ..... 81, 83
Steam Solenoid
70351011P 75
70351012 75
Steam Valve
F8322902 75
F8322903 75
Steam Valve Coil
M412258 75
70205701P 75
Steam Valve Harness Bracket
70369401 75
Steam Valve Rebuild Kit
M412259 75
70351021P 75
Steam Valve Wiring Cover
70369501 75
Stove Back
70297401 65
Stove Grill
70214901 73
Street Elbow
H86070034 69
Support Bearing
70448701 49
Support Bracket Assembly
70283801 55
Switch
M400947 9

N/A items do not appear in index.

© Copyright, Alliance Laundry Systems LLC – DO NOT COPY or TRANSMIT

Switch Assembly
70413401 55

T

Temperature Kit
70475001P 7, 11
Terminal Block
M412632 ..... 89, 93
430642 ..... 77, 81, 85
70120001 ..... 79, 83, 87
Thermistor
M414704 59
Thermistor Cover
70112801 65
Thermostat Bracket
70137801 75
Thermostat Cover
70139901 75
Thermostat Module
431347P 7, 11
Timer
M412079P 11
70131701P 11
70131801P 11
Timer Control Assembly
70175301P 7, 11
Timer Knob
70082101 11
Timer Motor
70218201 9
70218301 9
Timing Cam
M400732P 9
M400733P 9
M400734P 9
M400735P 9
M400736P 9
M400737P 9
M400738P 9
M400739P 9
M400740P 9
M400741P 9
Transformer
M414228P 77, 79, 81, 83, 85, 87
M414229P 77, 79, 81, 83, 85, 87
M414230P 77, 81
M414312P 77, 81
Trunnion and Seal Kit
70564801 49
70564803 49
Tumbler Dolly Kit
M4379P4 53

U

U-Bolt
70186101 57
U-Bolt Plate
70186601 57
Union
H86000031 71
USB IR Interface Kit
203346 ..... 23, 25, 27, 31, 33

V

Valve Bracket and Cover Kit
M4747P3 65
Valve Coil
F8514801 75
Valve Kit
F8521701 75
Valve Rebuild Kit
F8379502 75

W

Washer
F430311 45
M400080 49
M400991 ..... 49, 59
M405535 7
Wire Guard
201595P 29

N/A items do not appear in index.

© Copyright, Alliance Laundry Systems LLC – DO NOT COPY or TRANSMIT

Notes

© Copyright, Alliance Laundry Systems LLC – DO NOT COPY or TRANSMIT