Drying Tumblers

120 Pound Capacity
170 Pound Capacity

Models Through Serial No. 0907000048

Refer to Page 5 for Model Numbers

Parts

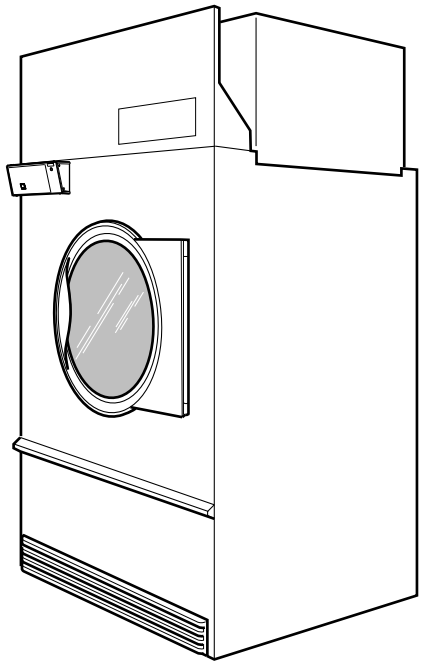

TMB1268C_70399801

Alliance™ Laundry Systems

www.alliancelaundry.com

Part No. 70399801R27
June 2025

Table of Contents

Title	Page
Parts Ordering Information	3
Serial Plate Location	3
Model Identification	5
Product Overview - Heat Source and Voltage	6
Product Overview - Control Suffixes (Drawing 1 of 2)	8
Product Overview - Control Suffixes (Drawing 2 of 2)	10
Exterior Control Box - RT Control Suffix (Drawing 1 of 2)	12
Exterior Control Box - RT Control Suffix (Drawing 2 of 2)	14
Exterior Control Box - RM Control Suffix	16
Exterior Control Box - RQ Control Suffix (Drawing 1 of 2)	18
Exterior Control Box - RQ Control Suffix (Drawing 2 of 2)	20
Interior Control Box - RM and RT Control Suffixes	22
Interior Control Box - RQ Control Suffix	24
DMP Control Box - C and I Models with RD Control Suffix	26
DX4 Control Box - B Models with R3 Control Suffix	28
Emergency Stop Button - CE Models	30
Fire Suppression System Control Box	32
Cabinet Front Components (Drawing 1 of 2)	34
Cabinet Front Components (Drawing 2 of 2)	36
Door and Hinge Components - G, H, K, L, P, S, U, W, X and Y Models	38
Door and Hinge Components - B, C and I Models	40
Lint Panel Components	42
Lint Panel Switch Assembly	44
Lint Screen and Drive Guard - 120 Pound Models	46
Lint Screen and Drive Guard - 170 Pound Models	48
Cylinder and Trunnion Assembly	50
Trunnion Bearings	52
Drive Sheave, Step Pulley and Belts	54
Cylinder Drive Motor	56
Fan Assembly - 120 Pound 50 Hertz Models	58
Fan Motor Assembly - 120 Pound 50 Hertz Models	60
Fan and Fan Motor Assembly - 120 Pound 60 Hertz Models	62
Fan Assembly - 170 Pound Models	64
Fan Motor Assembly - 170 Pound Models	66
Airflow Switch Assembly	68
Gas Heater Components - 120 Pound Models	70
Gas Heater Components - Non-CE 170 Pound Models	72
Gas Heater Components - CE 170 Pound Models (Drawing 1 of 2)	74
Gas Heater Components - CE 170 Pound Models (Drawing 2 of 2)	76
Burner Orifices	78
Steam Heater Components - 120 Pound Models Through Serial No. 0412012320 Except B, C, I and L Models	80

© Copyright 2025, Alliance Laundry Systems LLC

All rights reserved. No part of the contents of this book may be reproduced or transmitted in any form or by any means without the expressed written consent of the publisher.

Steam Heater Components - 120 Pound Models Starting Serial No. 0412012321 Except B, C, and I Models..... 82
Steam Heater Components - 120 Pound B, C and I Models 84
Steam Heater Components - 170 Pound Models Through Serial No. 0412012320 Except B, C, I and L Models.. 86
Steam Heater Components - 170 Pound Models Starting Serial No. 0412012321 Except B, C and I Models..... 88
Steam Heater Components - 170 Pound B, C and I Models 90
Steam Solenoid Valve..... 92
Rotation Sensor - B, C and I Models 94
Contactor Box Assembly (Drawing 1 of 2)..... 96
Contactor Box Assembly (Drawing 2 of 2)..... 98
Junction Box Assembly..... 100
Junction Box Harnesses 102
Parts Index..... 105

© Copyright, Alliance Laundry Systems LLC – DO NOT COPY or TRANSMIT

Parts Ordering Information

If literature or replacement parts are required, contact the source from whom the machine was purchased or contact Alliance Laundry Systems at (920) 748-3950 for the name and address of the nearest authorized parts distributor.

For technical assistance, call the number listed below:

(920) 748-3121 Ripon, Wisconsin

Serial Plate Location

When calling or writing about your product, be sure to mention model and serial numbers. Model and serial numbers are located on serial plate(s) as shown.

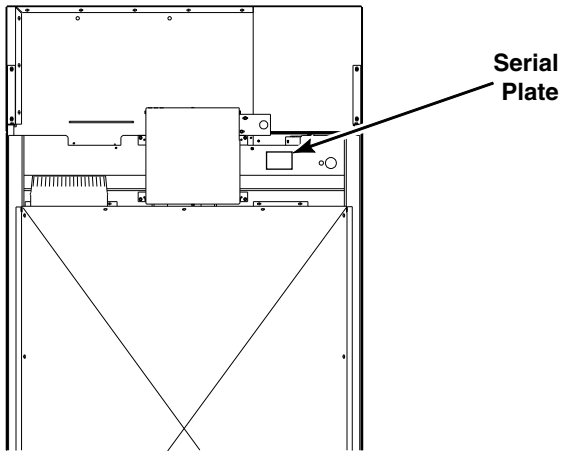

120 Pound

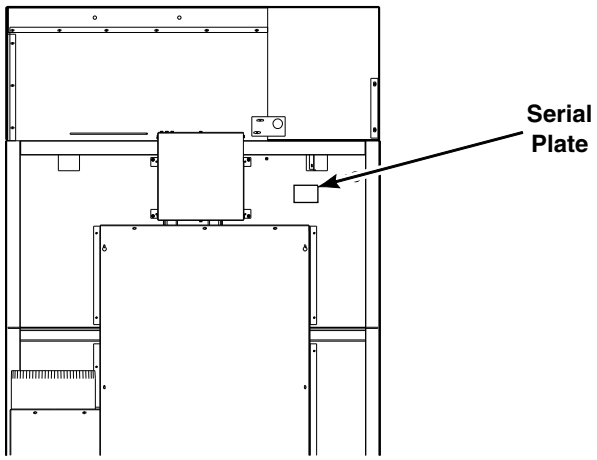

170 Pound

TMB2372P_70399801

© Copyright, Alliance Laundry Systems LLC – DO NOT COPY or TRANSMIT

Notes

© Copyright, Alliance Laundry Systems LLC – DO NOT COPY or TRANSMIT

Model Identification

Information in this manual is applicable to these tumbler models:

BA120L
BA120N
BA170L
BA170N
BT120L
BT120N
BT120S
BT120T
BT170L
BT170N
BT170S
BT170T
BU120L
BU120N
BU120S
BU120T
BU170L
BU170N
BU170S
BU170T
CA120L
CA120N
CA170L
CA170N
CT120L
CT120N
CT120S
CT120T
CT170L
CT170N
CT170S
CT170T

CU120L
CU120N
CU120S
CU120T
CU170L
CU170N
CU170S
CU170T
GA120L
GA120N
GA170L
GA170N
GT120L
GT120N
GT120S
GT120T
GT170L
GT170N
GT170S
GT170T
GU120L
GU120N
GU120S
GU120T
GU170L
GU170N
GU170S
GU170T
HA120L
HA120N
HA170L
HA170N
HT120L
HT120N
HT120S
HT120T
HT170L
HT170N
HT170S
HT170T

HU120L
HU120N
HU120S
HU120T
HU170L
HU170N
HU170S
HU170T
IT120L
IT120N
IT120S
IT120T
IT170L
IT170N
IT170S
IT170T
KA120L
KA120N
KA170L
KA170N
KT120L
KT120N
KT120S
KT120T
KT170L
KT170N
KT170S
KT170T
KU120L
KU120N
KU120S
KU120T
KU170L
KU170N
KU170S
KU170T

LA120L
LA120N
LA170L
LA170N
LT120L
LT120N
LT120S
LT120T
LT170L
LT170N
LT170S
LT170T
LU120L
LU120N
LU120S
LU120T
LU170L
LU170N
LU170S
LU170T
PA120L
PA120N
PA170L
PA170N
PT120L
PT120N
PT120S
PT120T
PT170L
PT170N
PT170S
PT170T
PU120L
PU120N
PU120S
PU120T
PU170L
PU170N
PU170S
PU170T

SA120L
SA120N
SA170L
SA170N
ST120L
ST120N
ST120S
ST120T
ST170L
ST170N
ST170S
ST170T
SU120L
SU120N
SU120S
SU120T
SU170L
SU170N
SU170S
SU170T
UA120L
UA120N
UA170L
UA170N
UT120L
UT120N
UT120S
UT120T
UT170L
UT170N
UT170S
UT170T
UU120L
UU120N
UU120S
UU120T
UU170L
UU170N
UU170S
UU170T

WT120L
WT120N
WT120S
WT170L
WT170N
WT170S
XT120L
XT120N
XT120S
XT120T
XT170L
XT170N
XT170S
XT170T
XU120L
XU120N
XU120S
XU120T
XU170L
XU170N
XU170S
XU170T
YT120L
YT120N
YT120S
YT120T
YT170L
YT170N
YT170S
YT170T
YU120S
YU120T

Control Suffixes (7th and 8th characters):

R3 - reversing DX4 OPL

RD - reversing DMP OPL

RM - reversing OPL micro

RQ - reversing dual digital timer

RT - reversing manual timer

© Copyright, Alliance Laundry Systems LLC – DO NOT COPY or TRANSMIT

Product Overview - Heat Source and Voltage

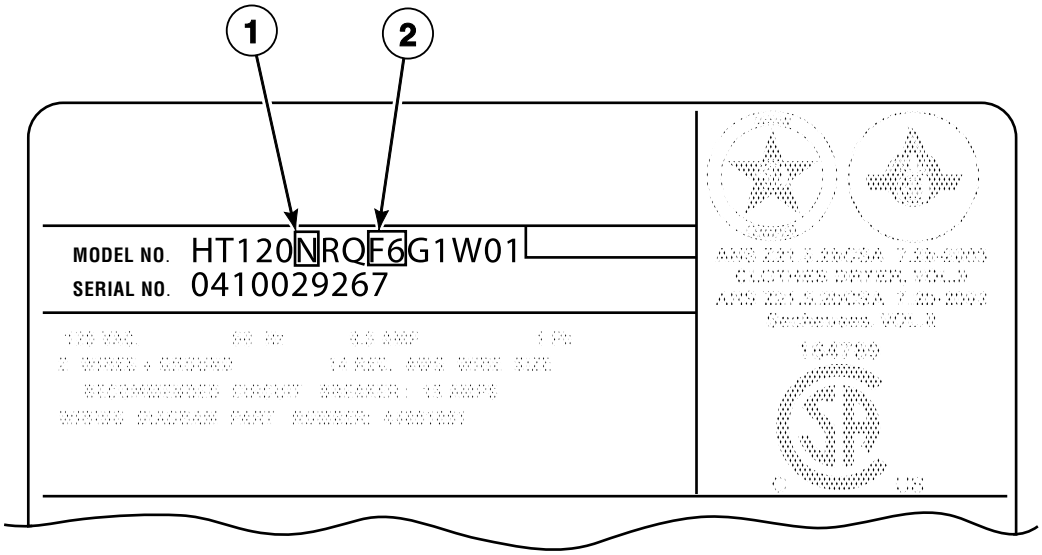

TMB2907P_70399801

© Copyright, Alliance Laundry Systems LLC – DO NOT COPY or TRANSMIT

Product Overview - Heat Source and Voltage

REF	PART NO.	DESCRIPTION	COMMENTS
1	-	Heat Source	L: Liquid Petroleum Gas (L.P.) N: Natural Gas (N.G.) S: Steam T: Thermal Oil
2	-	Voltage	F6: 200-208 or 240 Volt/60 Hertz/3 Phase J5: 230 Volt/50 Hertz/3 Phase M2: 380 or 400-415 Volt/50 Hertz/3 Phase M3: 380 Volt/60 Hertz/3 Phase P1: 440 Volt/60 Hertz/3 Phase Q1: 460-480 Volt/60 Hertz/3 Phase

© Copyright, Alliance Laundry Systems LLC – DO NOT COPY or TRANSMIT

Product Overview - Control Suffixes (Drawing 1 of 2)

All Models Except G and K Models

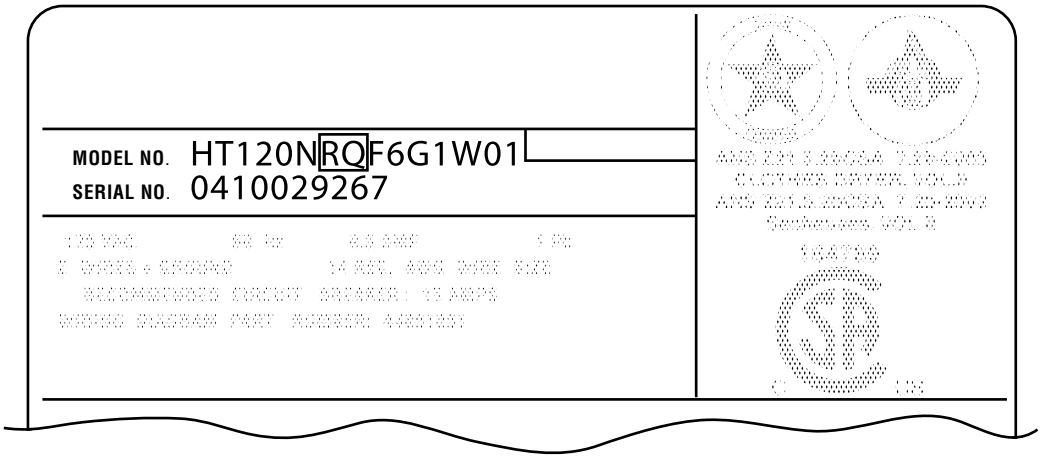

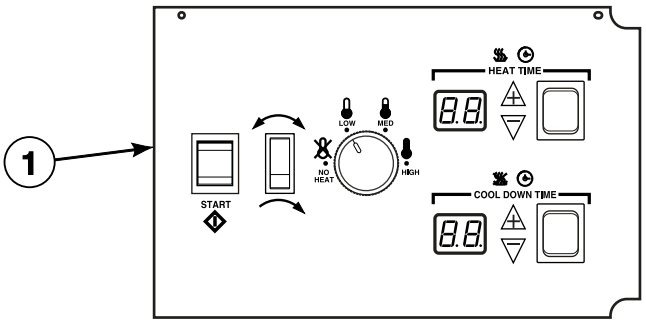

RQ Control Suffixes

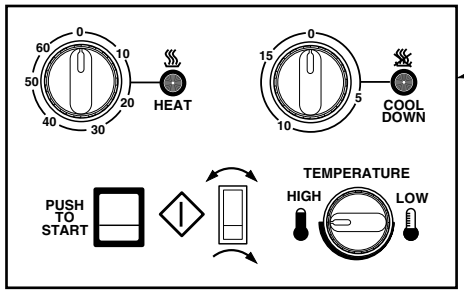

RT Control Suffixes

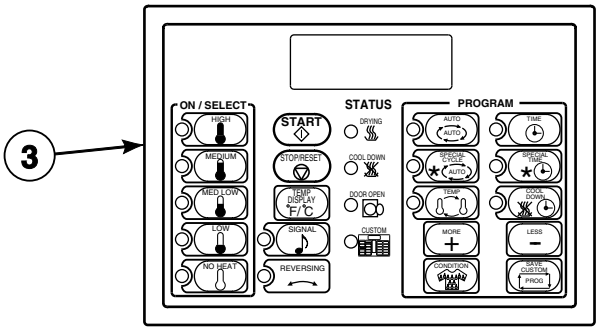

RM Control Suffixes

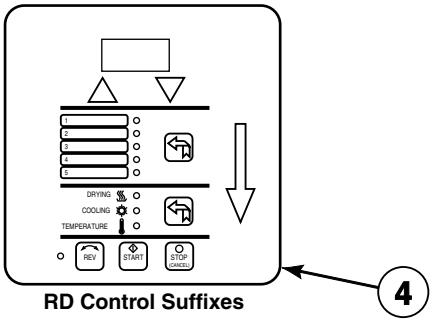

RD Control Suffixes

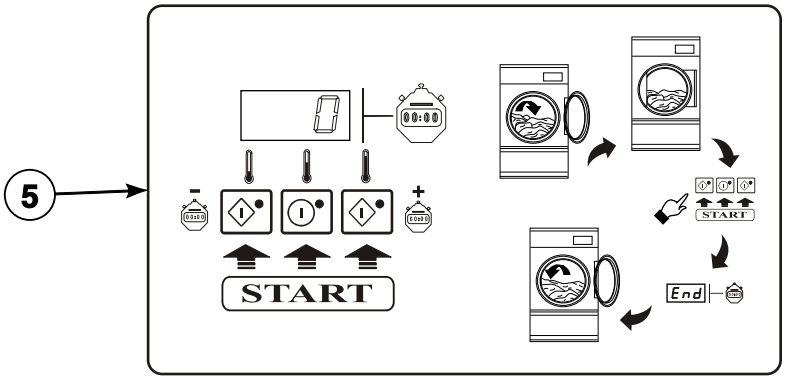

R3 Control Suffixes

TMB2905P_70399801

© Copyright, Alliance Laundry Systems LLC – DO NOT COPY or TRANSMIT

Product Overview - Control Suffixes (Drawing 1 of 2)

REF	PART NO.	DESCRIPTION	COMMENTS
1	-	Control - Reversing	RQ: reversing dual digital timer
2	-	Control - Reversing	RT: reversing manual timer
3	-	Control - Reversing	RM: reversing OPL micro
4	-	Control - Reversing	RD: reversing DMP OPL
5	-	Control - Reversing	R3: reversing DX4 OPL

NOTE: OPL models have the following control suffixes: R3, RD, RM, RQ and RT.

© Copyright, Alliance Laundry Systems LLC – DO NOT COPY or TRANSMIT

Product Overview - Control Suffixes (Drawing 2 of 2)

G and K Models

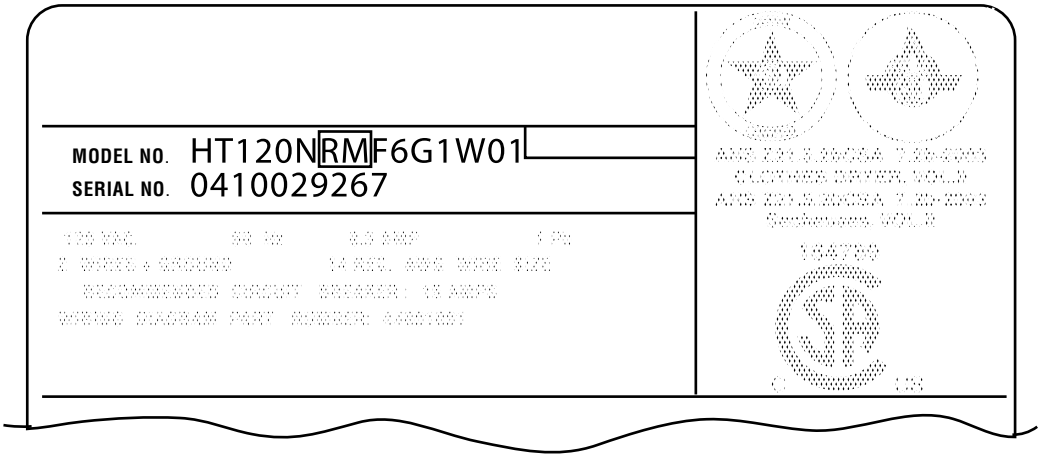

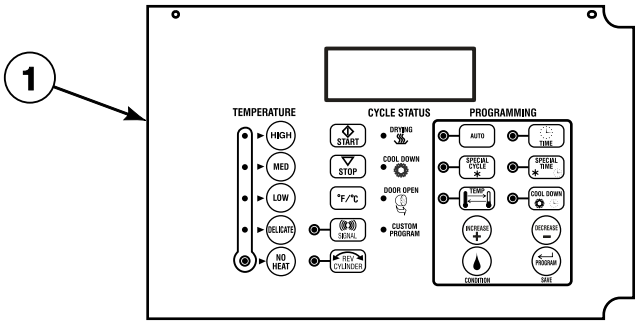

RM Control Suffixes

TMB2906P_70399801

© Copyright, Alliance Laundry Systems LLC – DO NOT COPY or TRANSMIT

Product Overview - Control Suffixes (Drawing 2 of 2)

REF	PART NO.	DESCRIPTION	COMMENTS
1	-	Control - Reversing	RM: reversing OPL micro

NOTE: OPL models have the following control suffixes: RM.

© Copyright, Alliance Laundry Systems LLC – DO NOT COPY or TRANSMIT

Exterior Control Box - RT Control Suffix (Drawing 1 of 2)

H, P, S, U, W and X Models

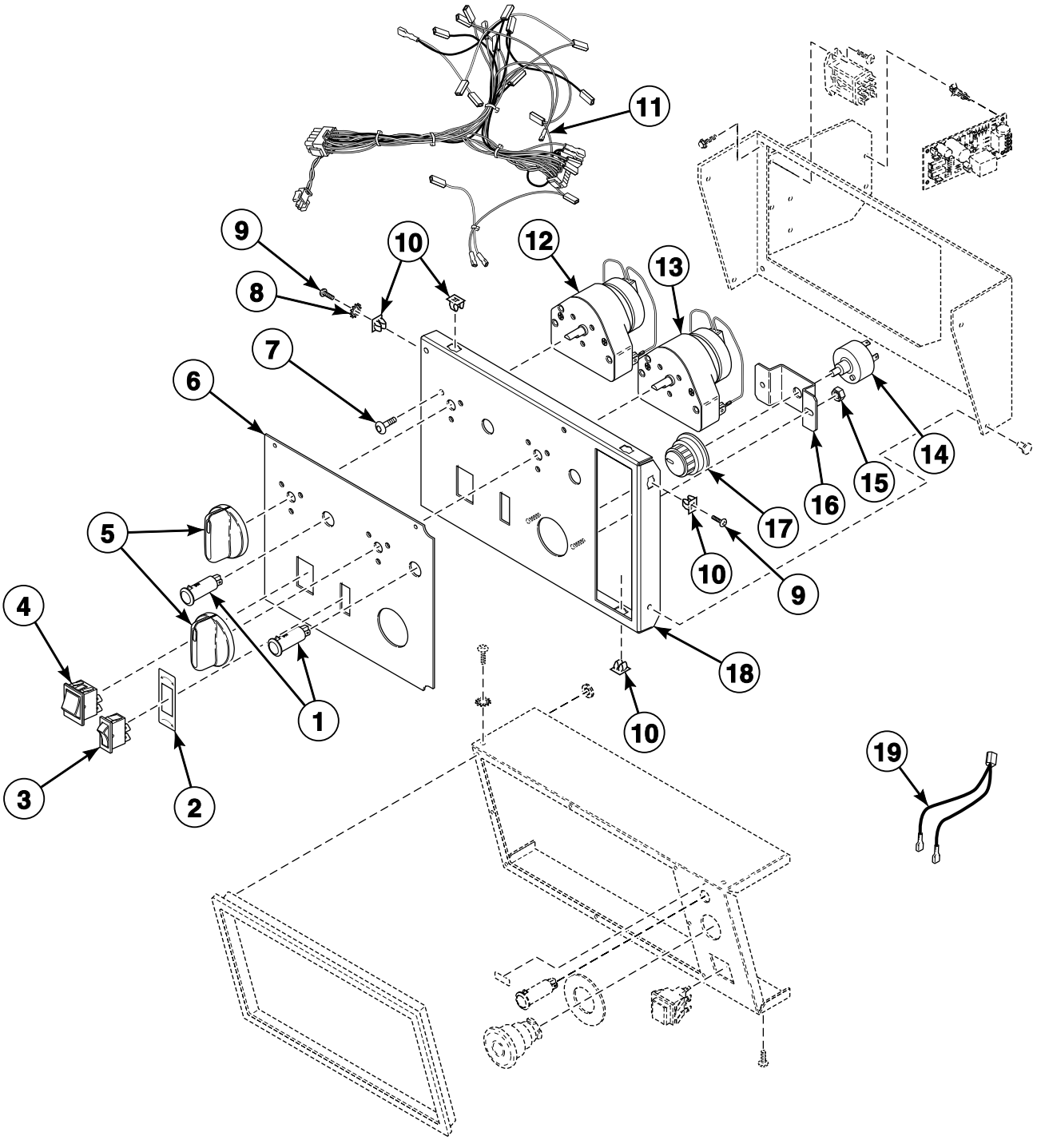

© Copyright, Alliance Laundry Systems LLC – DO NOT COPY or TRANSMIT

Exterior Control Box - RT Control Suffix (Drawing 1 of 2)

REF	PART NO.	DESCRIPTION	COMMENTS
	M4795P3W	Security Cover Kit	
1	70082201	Indicator Light	Green; 24 Volt
2	M413236	Switch Plate	Reversing
3	M413270	Rocker Switch	Reversing
4	70108501	Start Switch	
5	70082101	Timer Knob	P, S, U and X models
	M410927	Knob	H and W models; Timer
6	70114502	Overlay	S, U, W and X models; Text; Punch
	N/A	Overlay	S and U models; Icon; Punch
	70128901	Nameplate Overlay	P models
	N/A	Overlay	P models
	N/A	Overlay	H models; Text
	N/A	Overlay	H models; Icon
7	44041301	Screw	
8	03815	Washer	
9	800930	Screw	
10	70030501	Expansion Clip	6 required per control plate assembly
11	44019401	Control Panel Harness	Non-CE models
	44027301	Control Panel Harness	CE models
12	70131701P	Timer	Heating; 60 minute
13	M412079P	Timer	Cooling; 50 Hertz; 15 minute
	70131801P	Timer	Cooling; 60 Hertz; 15 minute
14	70475001P	Temperature Kit	Potentiometer; Includes nut
15	70054	Nut	2 required
16	70080701	Mounting Bracket	Temperature switch
17	44020501	Knob	P, S, U and X models; Temperature
	44104601	Temperature Knob	H and W models
18	44029501	Control Plate Assembly	Includes studs
19	70084104P	Calibration Jumper	

N/A = Part no longer available

© Copyright, Alliance Laundry Systems LLC – DO NOT COPY or TRANSMIT

Exterior Control Box - RT Control Suffix (Drawing 2 of 2)

H, P, S, U, W and X Models

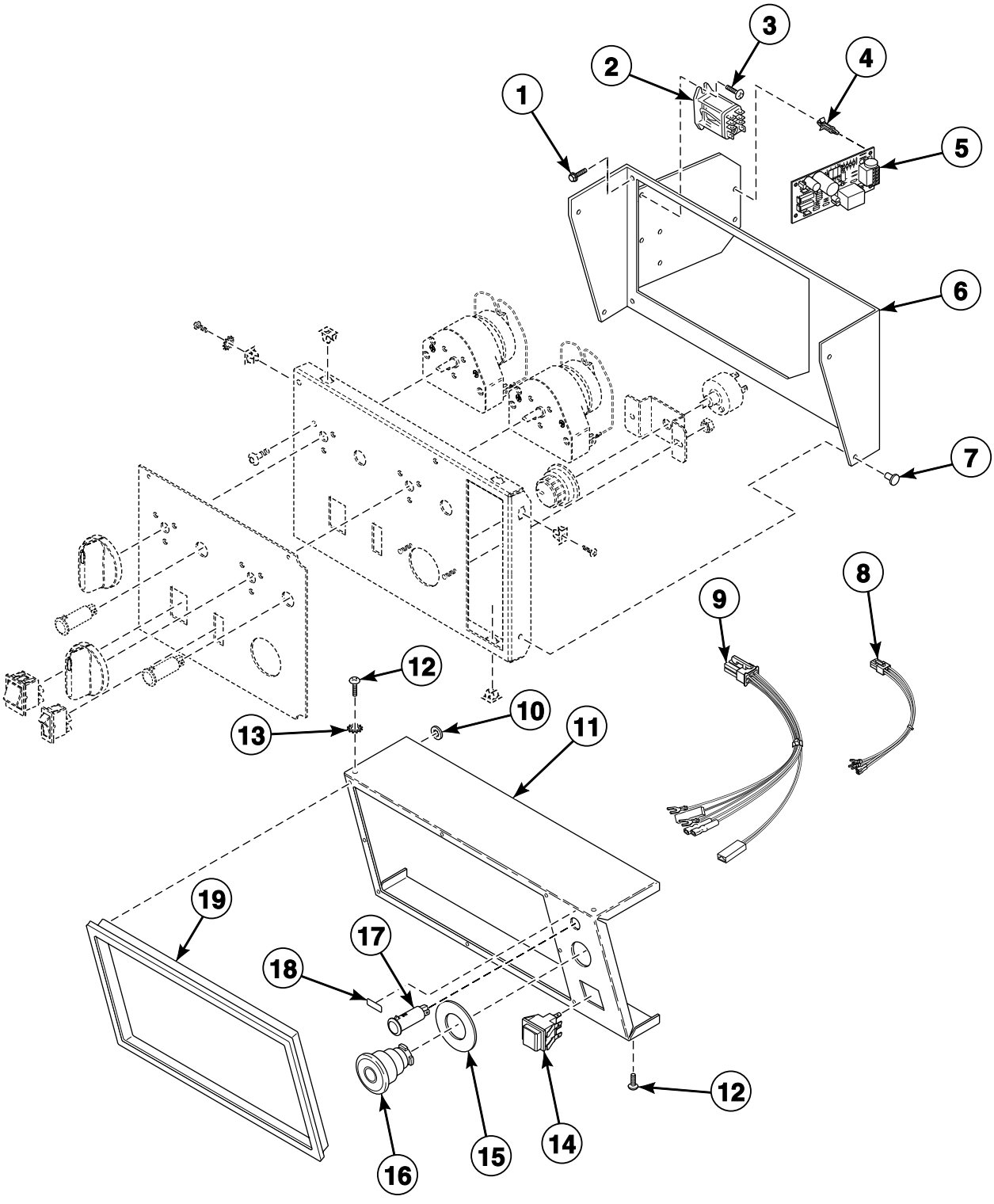

TMB2293P_70399801

© Copyright, Alliance Laundry Systems LLC – DO NOT COPY or TRANSMIT

Exterior Control Box - RT Control Suffix (Drawing 2 of 2)

REF	PART NO.	DESCRIPTION	COMMENTS
	M4795P3W	Security Cover Kit	
1	430497	Screw	4 required
2	M412534	Relay	
3	M402797	Screw	2 required
4	34896	Circuit Board Support	4 required
5	431347P	Thermostat Module	
6	44012801*	Control Mounting Bracket	
	N/A	Control Mounting Bracket	Stainless steel
7	M400713	Drive Rivet	2 required
8	44030302	Emergency Stop Harness	CE steam models
9	44029401	Emergency Stop Reset Harness	CE gas models
10	M400977	Nut	8 required per control trim
11	44013301*	Control Cover	Non-CE models
	44013302	Control Cover	Non-CE models; Stainless steel
	44013303*	Control Cover	CE gas models
	44013304	Control Cover	CE gas models; Stainless steel
	44013305*	Control Cover	CE steam models
	44013306	Control Cover	CE steam models; Stainless steel
12	800930	Screw	4 required
13	03815	Washer	
14	M413431	Pushbutton Switch	CE gas models; Ignition reset
15	44012901	Emergency Stop Label	CE models
16	F200233500	Emergency Stop Pushbutton	CE models
17	70082201	Indicator Light	Green; 24 Volt
18	N/A	Load Ready Label	
19	44016401	Control Trim	Black; P, S, U and X models
	44016402	Control Trim	Gray; H and W models

*** Add Letter To Designate Color. L - Almond W - White**

N/A = Part no longer available

© Copyright, Alliance Laundry Systems LLC – DO NOT COPY or TRANSMIT

Exterior Control Box - RM Control Suffix

All Models Except B, C, I and YT Models

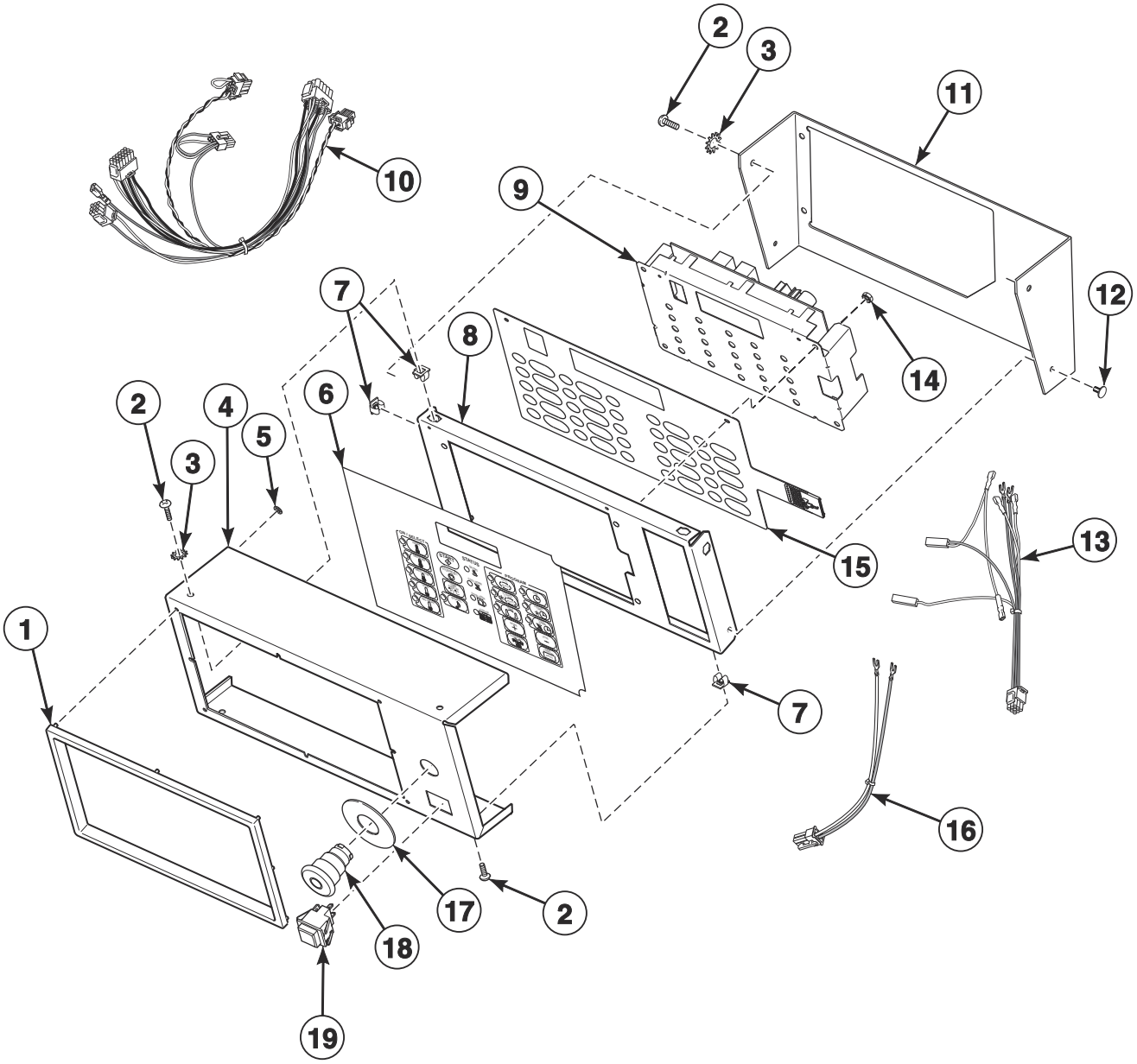

TMB3266P_70399801

© Copyright, Alliance Laundry Systems LLC – DO NOT COPY or TRANSMIT

Exterior Control Box - RM Control Suffix

REF	PART NO.	DESCRIPTION	COMMENTS
	M4795P3W	Security Cover Kit	
	203346	USB IR Interface Kit	
1	44016401	Control Trim	Black; G, K, L, P, S, U, W, X and YU models
	44016402	Control Trim	Gray; H models
2	800930	Screw	4 required
3	03815	Washer	
4	44013307*	Control Cover	HA, HT, LT, PA, PT, SA, ST, UA, UT, W and XT models
	N/A	Control Cover	HT, ST, UT and XT models; Stainless steel
	44013309*	Control Cover	HU, LU, PU, SU and UU gas models
	N/A	Control Cover	HU, LU, PU, SU and UU gas models; Stainless steel
	N/A	Control Cover	HU, LU, PU, UU and YU steam models
	N/A	Control Cover	HU, LU, PU, UU and YU steam models; Stainless steel
	44013306	Control Cover	XU and YU models; Stainless steel
	44111701W	Control Cover	GA, GT, KA and KT models
	44111703W	Control Cover	GU and KU gas models
	44111705W	Control Cover	GU and KU steam models
5	M400977	Nut	8 required per control trim
6	70128401	Overlay	LA, LT, S, U, W, X and YU models; Text
	70128601	Overlay	H models; Text
	70130501	Overlay	LU, SU and UU models; Icon
	70130701	Overlay	HU models; Icon
	70135301	Overlay	P models
	44130001	Overlay	G and K models; Text and icon
7	70030501	Expansion Clip	6 required per control plate
8	44029601	Control Plate Assembly	Includes studs
9	70228401P	Control Kit	Includes tape
10	44027201	Control Panel Harness	CE models
	44019301	Control Panel Harness	All other models
11	44099501W	Control Mounting Bracket	G and K models
	44012801*	Control Mounting Bracket	All other models
	N/A	Control Mounting Bracket	All other models; Stainless steel
12	M400713	Drive Rivet	2 required
13	44030201	Emergency Stop Reset Harness	CE gas models
14	70054	Nut	4 required per control plate
15	M414368P	Membrane Switch	
16	44030301	Emergency Stop Harness	CE steam models
17	44012901	Emergency Stop Label	CE models
18	F200233500	Emergency Stop Pushbutton	CE models
19	M413431	Pushbutton Switch	CE gas models

*** Add Letter To Designate Color. L - Almond W - White**

N/A = Part no longer available

© Copyright, Alliance Laundry Systems LLC – DO NOT COPY or TRANSMIT

Exterior Control Box - RQ Control Suffix (Drawing 1 of 2)

C, H, I, P, S, U, X and YT Models

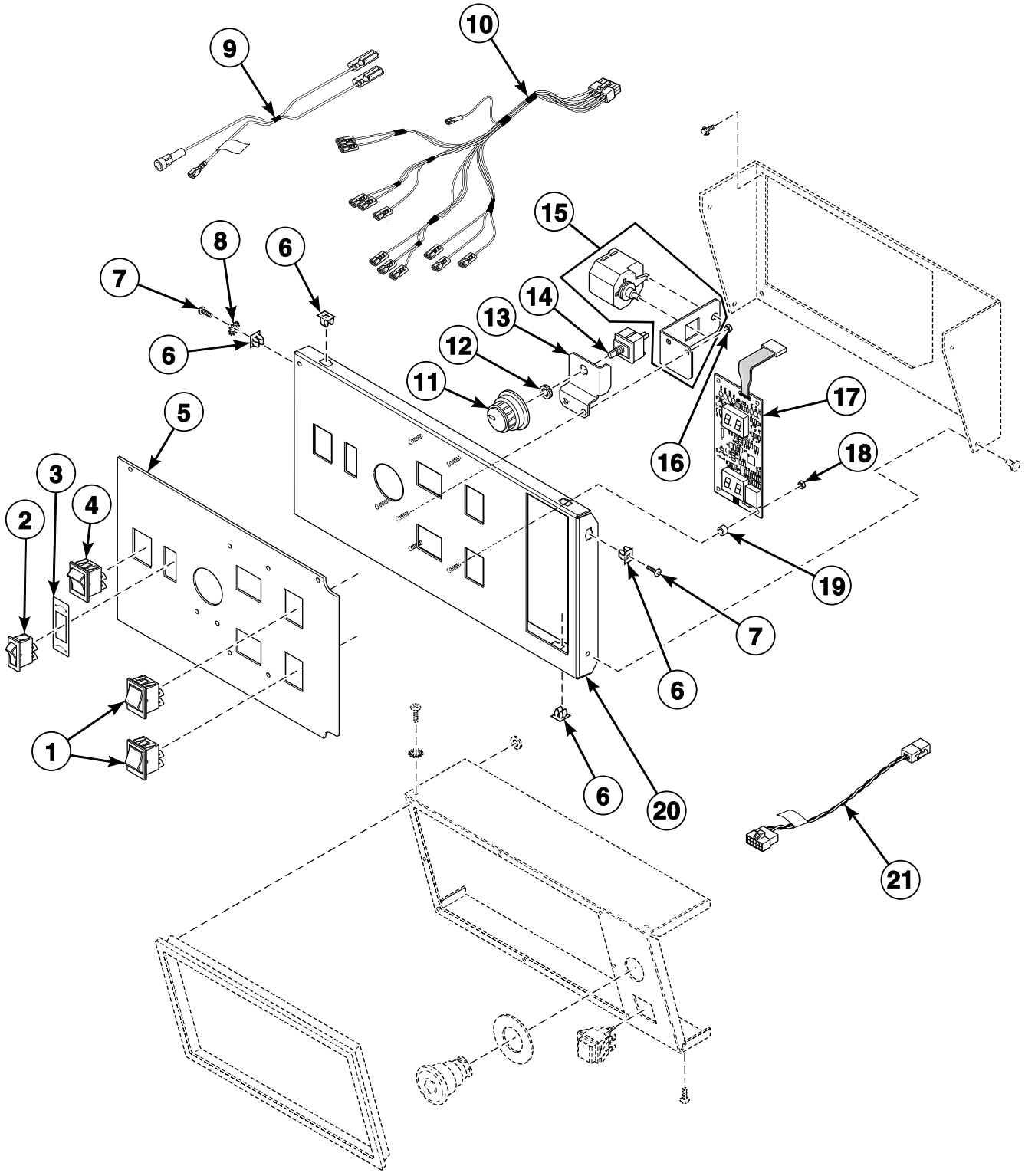

© Copyright, Alliance Laundry Systems LLC – DO NOT COPY or TRANSMIT

Exterior Control Box - RQ Control Suffix (Drawing 1 of 2)

REF	PART NO.	DESCRIPTION	COMMENTS
	M4795P3W	Security Cover Kit	
	203346	USB IR Interface Kit	
1	70461301	Rocker Switch	
2	44099601	Rocker Switch	Reversing
3	M413236	Switch Plate	Reversing
4	70455101	Rocker Switch	Start
5	70362202	Overlay	C, I, S, U, X and YT models; Punch
	70362502	Overlay	H models
	70362402	Overlay	P models
6	70030501	Expansion Clip	
7	800930	Screw	
8	03815	Washer	
9	44100101P	Control Harness	Jumper
10	44101101P	Control Harness	Interface
11	44104601	Temperature Knob	
12	24205	Nut	
13	70391701	Temperature Selector Switch Bracket	
14	D511711	Temperature Selector Switch	
15	M4860P3	Buzzer Kit	Includes bracket, buzzer and wire harness
16	70054	Nut	2 required
17	D512218P	Display Assembly	
18	29787	Nut	4 required
19	56079	Panel Locator	4 required
20	44099201	Control Plate and Studs Assembly	Includes studs
21	70324605	Jumper Calibration Wire	

© Copyright, Alliance Laundry Systems LLC – DO NOT COPY or TRANSMIT

Exterior Control Box - RQ Control Suffix (Drawing 2 of 2)

C, H, I, P, S, U, X and YT Models

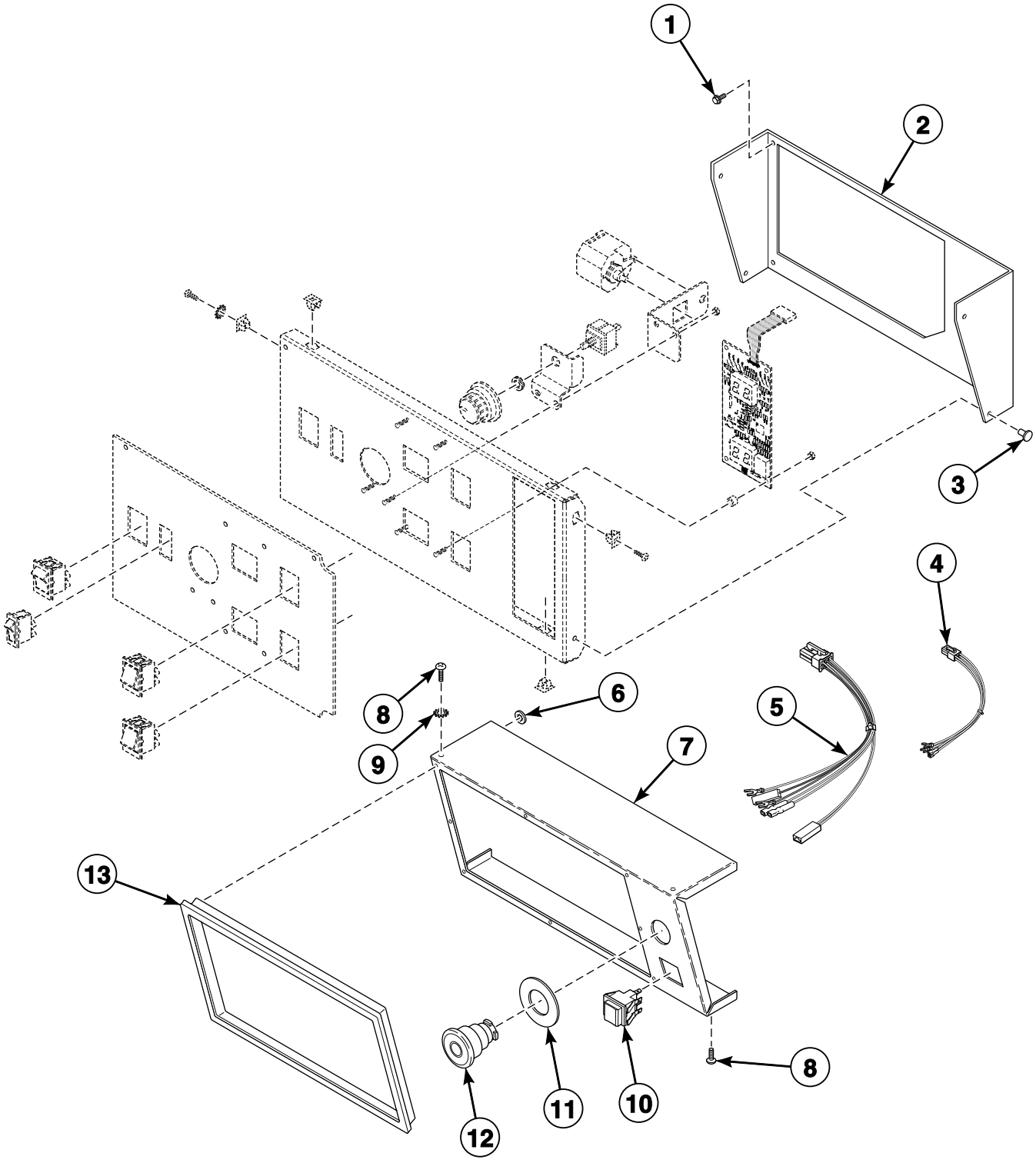

TMB2275P_70399801

© Copyright, Alliance Laundry Systems LLC – DO NOT COPY or TRANSMIT

Exterior Control Box - RQ Control Suffix (Drawing 2 of 2)

REF	PART NO.	DESCRIPTION	COMMENTS
	M4795P3W	Security Cover Kit	
1	430497	Screw	
2	44099501W	Control Mounting Bracket	
	44099505	Control Mounting Bracket	Stainless steel
3	M400713	Drive Rivet	
4	44030301	Emergency Stop Harness	CE models
5	44030201	Emergency Stop Reset Harness	CE models
6	M400977	Nut	
7	44013307*	Control Cover	Non-CE models
	N/A	Control Cover	Non-CE models; Stainless steel
	44013309*	Control Cover	CE models
	N/A	Control Cover	CE models; Stainless steel
8	800930	Screw	
9	03815	Washer	
10	M413431	Pushbutton Switch	CE models; Ignition reset
11	44012901	Emergency Stop Label	CE models
12	F200233500	Emergency Stop Pushbutton	CE models
13	44016401	Control Trim	Black; S, U, X and YT models
	44016402	Control Trim	Gray; H models

*** Add Letter To Designate Color. L - Almond W - White**

N/A = Part no longer available

© Copyright, Alliance Laundry Systems LLC – DO NOT COPY or TRANSMIT

Interior Control Box - RM and RT Control Suffixes

G, H, K, L, P, S, U, W, X and YU Models

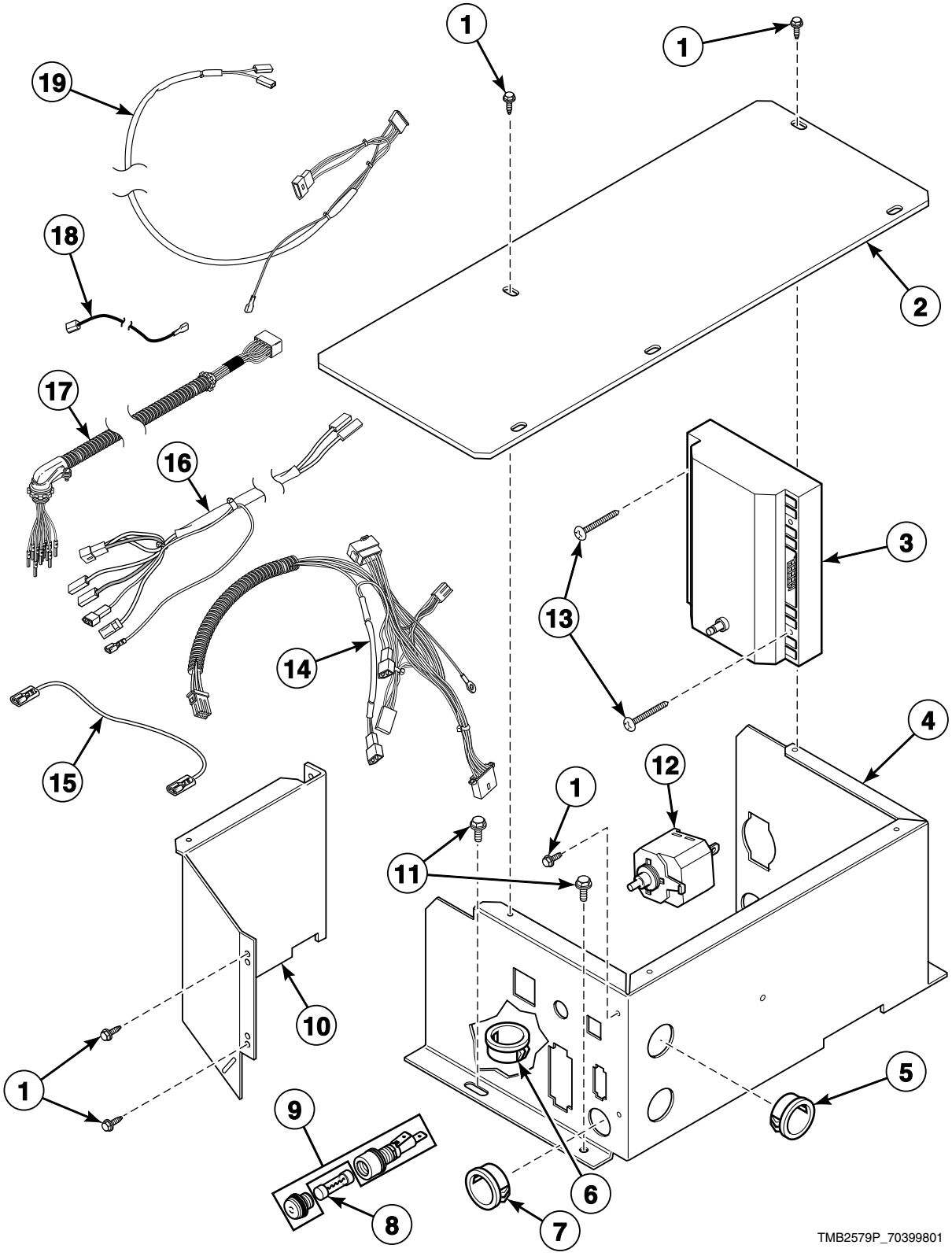

© Copyright, Alliance Laundry Systems LLC – DO NOT COPY or TRANSMIT

Interior Control Box - RM and RT Control Suffixes

REF	PART NO.	DESCRIPTION	COMMENTS
1	51780	Screw	
2	N/A	Control Box Cover	Models through Serial No. 0206014261 except L models
	44047301	Control Box Cover	Models starting Serial No. 0206014262
3	44264801	Ignition Control Kit	Non-CE and non-Australian gas models
	M4957P3	Ignition Control Kit	CE and Australian gas models
4	N/A	Control Box	Rear; Models through Serial No. 0206014261 except L models
	44047201	Control Box	Rear; Models starting Serial No. 0206014262
5	70178701	Snap Bushing	1 inch panel hole
6	M411537	Bushing	Cabinet frame lint panel harness
7	M400770	Snap Bushing	CE models; .875 inch panel hole
8	M413623	Fuse	Non-CE models
	M413889	Fuse	All other models
9	91024P	Fuse Receptacle	Non-CE models
	D502591P	Fuse Holder Kit	All other models
	D502811	Fuse Carrier	All other models
10	N/A	Control Box	Front; Models through Serial No. 0206014261 except L models
	44047401	Control Box	Front; Models starting Serial No. 0206014262
11	430497	Screw	4 required
12	D505447	Adjustable Buzzer	24 Volt; RT control suffix
13	70118801	Screw	Non-Australian models
	M411143	Screw	Australian models
14	44019901	Control Box Harness	Non-CE models
	N/A	Control Box Harness	All other models with RT control suffix
	44027001P	Control Box Harness	All other models with RM control suffix
15	M414287	Sensor Wire	HA, PA, SA and UA models
16	N/A	Wire Harness Assembly	Australian models; Ignition control
17	44027101	Main Harness	CE models
	44019501	Main Harness	All other models
18	M411061	ICM Return Lead	Australian models; Use with M410904P Instant Electronic Ignition Control
19	M413534P	Ignition Control Harness Assembly	Non-CE and non-Australian gas models
	N/A	Ignition Control Harness	CE gas models

N/A = Part no longer available

© Copyright, Alliance Laundry Systems LLC – DO NOT COPY or TRANSMIT

Interior Control Box - RQ Control Suffix

C, H, I, P, S, U, X and YT Models

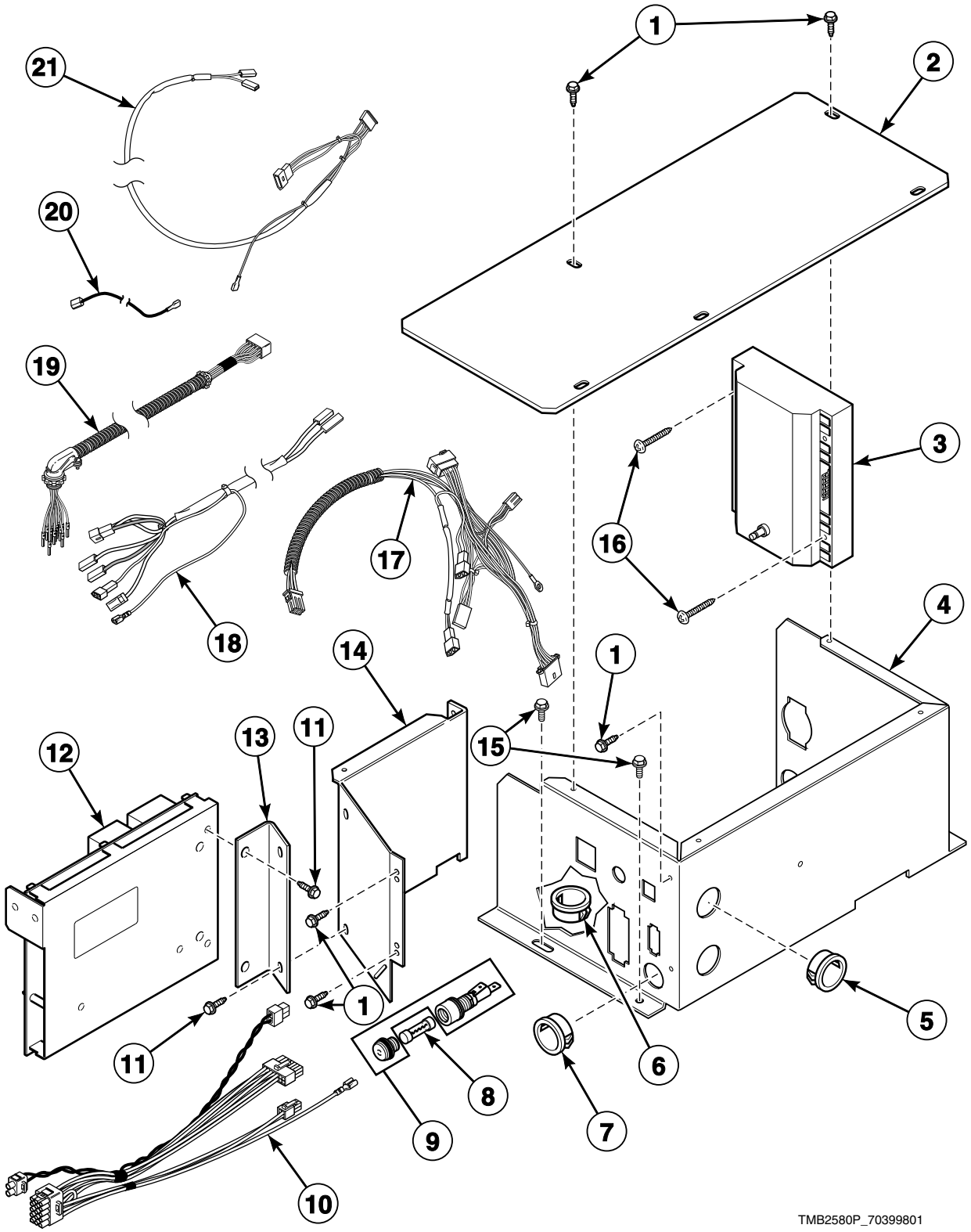

© Copyright, Alliance Laundry Systems LLC – DO NOT COPY or TRANSMIT

Interior Control Box - RQ Control Suffix

REF	PART NO.	DESCRIPTION	COMMENTS
1	51780	Screw	
2	44047301	Control Box Cover	
3	44264801	Ignition Control Kit	Non-CE and non-Australian gas models
	M4957P3	Ignition Control Kit	CE and Australian gas models
4	44047201	Control Box	Rear
5	70178701	Snap Bushing	1 inch panel hole
6	M411537	Bushing	Cabinet frame lint panel harness
7	M400770	Snap Bushing	CU, HU, PU, SU, UU and XU models; .875 inch panel hole
8	M414232	Fuse	Non-CE models
	M413889	Fuse	CE models
9	91024P	Fuse Receptacle	Non-CE models
	D502591P	Fuse Holder Kit	CE models
	D502811	Fuse Carrier	CE models
10	44100401	Control Panel Harness	Non-CE models
	44100501	Control Panel Harness	CE models
11	D501524	Screw	
12	D512202P	Control Assembly	
13	44099301	Control Bracket	
14	44047401	Control Box	Front
15	430497	Screw	
16	70118801	Screw	Non-Australian models
	M411143	Screw	Australian models
17	44101001	Control Box Harness	Non-CE models
	44102101P	Control Box Harness	CE models
18	N/A	Wire Harness Assembly	Australian models; Ignition control
19	44027101	Main Harness	CE models
	44019501	Main Harness	All other models
20	M411061	ICM Return Lead	Australian models; Use with M410904P Instant Electronic Ignition Control
21	M413534P	Ignition Control Harness Assembly	Non-CE and non-Australian gas models
	N/A	Ignition Control Harness	CE gas models

N/A = Part no longer available

© Copyright, Alliance Laundry Systems LLC – DO NOT COPY or TRANSMIT

DMP Control Box - C and I Models with RD Control Suffix

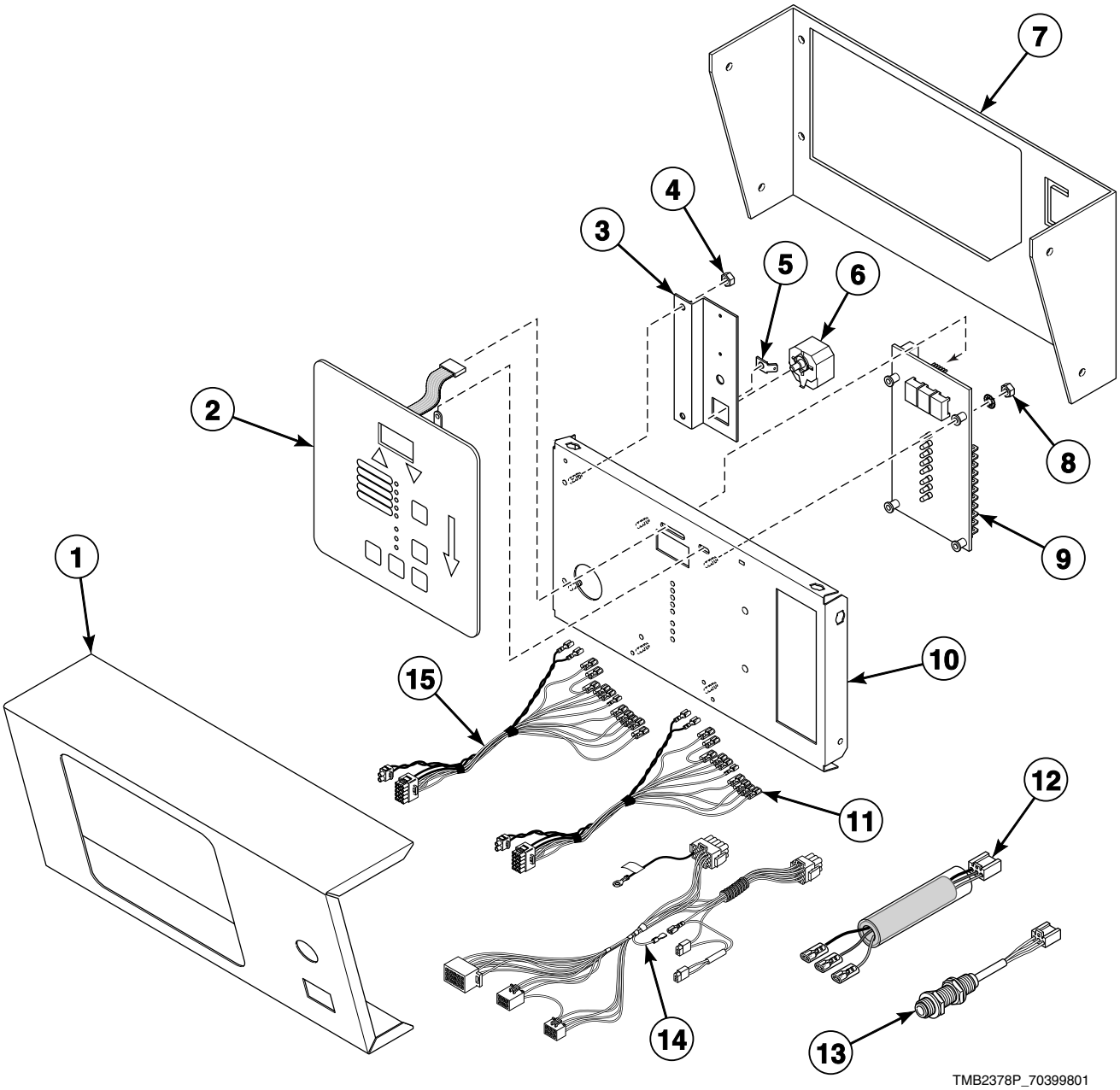

© Copyright, Alliance Laundry Systems LLC – DO NOT COPY or TRANSMIT

DMP Control Box - C and I Models with RD Control Suffix

REF	PART NO.	DESCRIPTION	COMMENTS
1	44040107*	Control Cover	Non-CE models
	44040108	Control Cover	Non-CE models; Stainless steel
	44040109*	Control Cover	CE gas models
	44040110	Control Cover	CE gas models; Stainless steel
	44040111*	Control Cover	CE steam models
	44040112	Control Cover	CE steam models; Stainless steel
2	44037901P	Membrane Switch	
3	44041701	Relay/Buzzer Bracket	
4	70054	Nut	
5	00177	Male Tab Terminal	
6	D505447	Adjustable Buzzer	
7	44040201*	Control Mounting Bracket	Non-CE models
	44040202	Control Mounting Bracket	Non-CE models; Stainless steel
8	29787	Nut	
9	44037801P	Electronic Control	
10	44041101	Control Plate Assembly	
11	44054001P	Control Panel Harness	CE models
12	7009P	Rotation Sensor Kit	
13	7010P	Rotation Sensor Kit	
14	44111601P	Control Box Harness	CE models
15	44111501P	Control Panel Harness	Non-CE models

*** Add Letter To Designate Color. Q - Bisque W - White**

© Copyright, Alliance Laundry Systems LLC – DO NOT COPY or TRANSMIT

DX4 Control Box - B Models with R3 Control Suffix

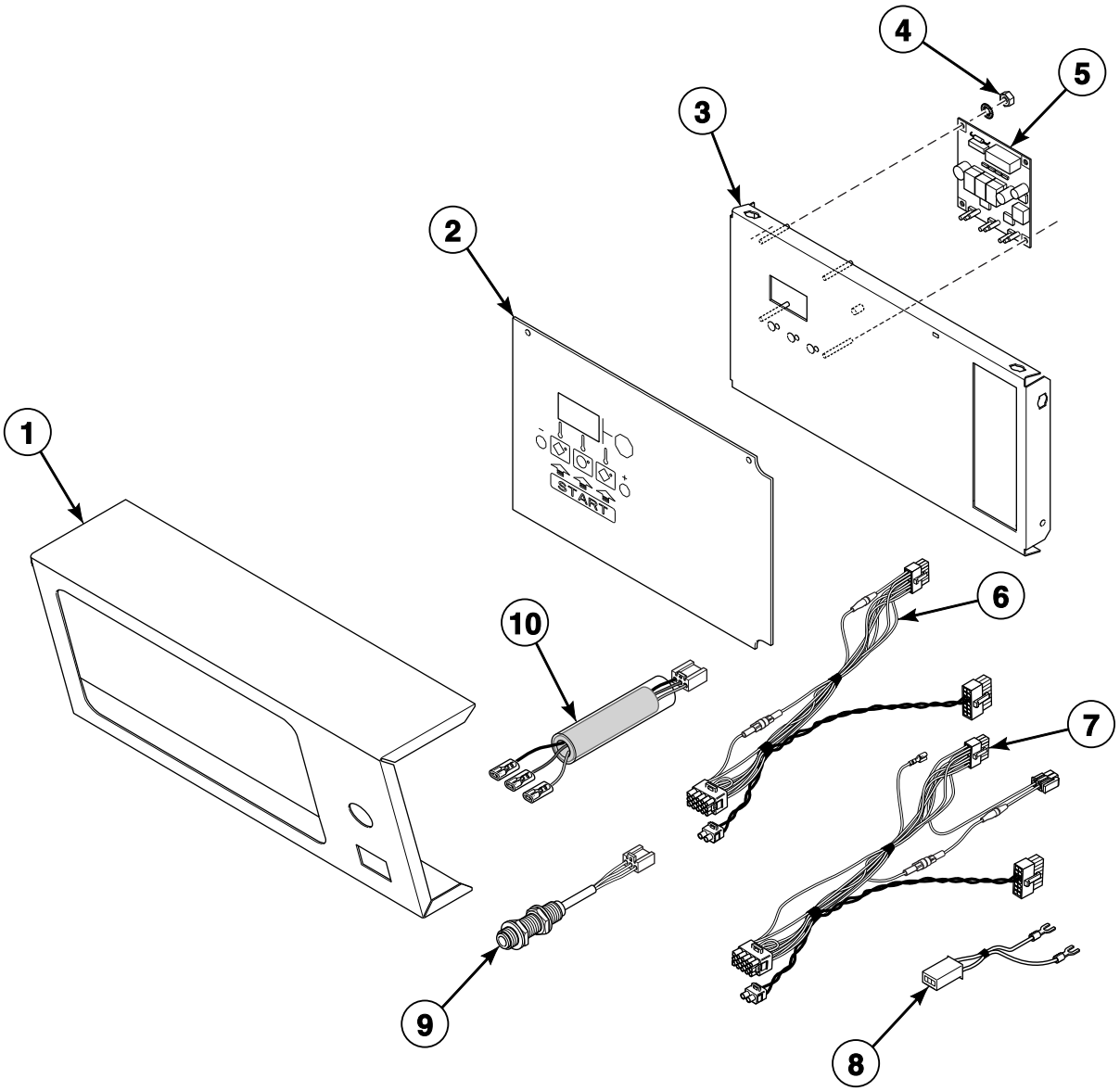

TMB2379P_70399801

© Copyright, Alliance Laundry Systems LLC – DO NOT COPY or TRANSMIT

DX4 Control Box - B Models with R3 Control Suffix

REF	PART NO.	DESCRIPTION	COMMENTS
1	44111701*	Control Cover	Non-CE models
	44111717	Control Cover	Non-CE models; Stainless steel
	44111703*	Control Cover	CE gas models
	44111704	Control Cover	CE gas models; Stainless steel
	44111705*	Control Cover	CE steam models
	44111719	Control Cover	CE steam models; Stainless steel
2	44240501	Graphic Overlay	CE models
	259/00005/00	Overlay	PRO HC control replacement; Refer to Parts Information Insert 8-18-251 for list of machine serial numbers
3	44038601	Control Plate Assembly	CE models
4	29787	Nut	
5	44051004	Electronic Control	
	254/00070/00P	Control Board	PRO HC control replacement; Refer to Parts Information Insert 8-18-251 for list of machine serial numbers
6	44111201P	Control Panel Harness	Non-CE models
7	44058201P	Control Panel Harness	CE models
8	44111401	Emergency Stop Harness	CE models
9	7010P	Rotation Sensor Kit	
10	7009P	Rotation Sensor Kit	

*** Add Letter To Designate Color. Q - Bisque W - White**

© Copyright, Alliance Laundry Systems LLC – DO NOT COPY or TRANSMIT

Emergency Stop Button - CE Models

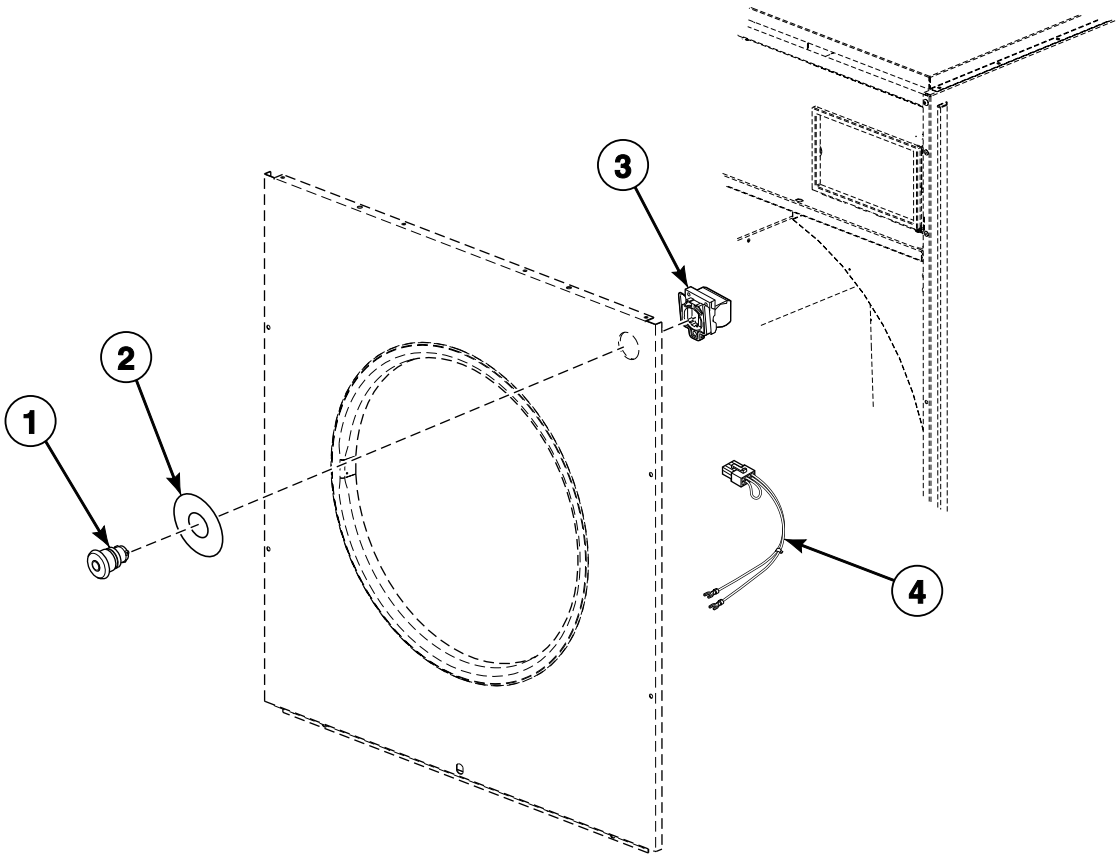

TMB2386P_70399801

© Copyright, Alliance Laundry Systems LLC – DO NOT COPY or TRANSMIT

Emergency Stop Button - CE Models

REF	PART NO.	DESCRIPTION	COMMENTS
	F200233700P	Emergency Stop Button Kit	To switch from old style button to new style button
1	44018801	Pushbutton	Models through 9/30/07
	F200233500	Emergency Stop Pushbutton	Models starting 10/1/07
2	44012901	Emergency Stop Label	
3	44018701	Contact Block	Models through 9/30/07
	44018901	Contact Block	Models through 9/30/07; Order in addition to 44018701 Contact Block on models with R3 control suffix
	F200233401P	Contact Block Switch	Models starting 10/1/07 through 8/17/14
	F8069501	Contact Switch	Models starting 8/18/14
	F8538101	Contact Base	Models starting 8/18/14
4	70083901	Emergency Stop Switch Harness Assembly	G and K models; H, S and U models starting Serial No. 0308001308; B models starting Serial No. 0704000046
	44063201P	Front Panel Harness Assembly	B models; Models starting Serial No. 0704000046
	N/A	Emergency Stop Harness	B models; Models starting Serial No. 0704000046

N/A = Part no longer available

© Copyright, Alliance Laundry Systems LLC – DO NOT COPY or TRANSMIT

Fire Suppression System Control Box

B, C, G, H, I, K, S and U Models

Models with a K, L, T or U in the 11th Character (ST120NRTF6**K**1W01)

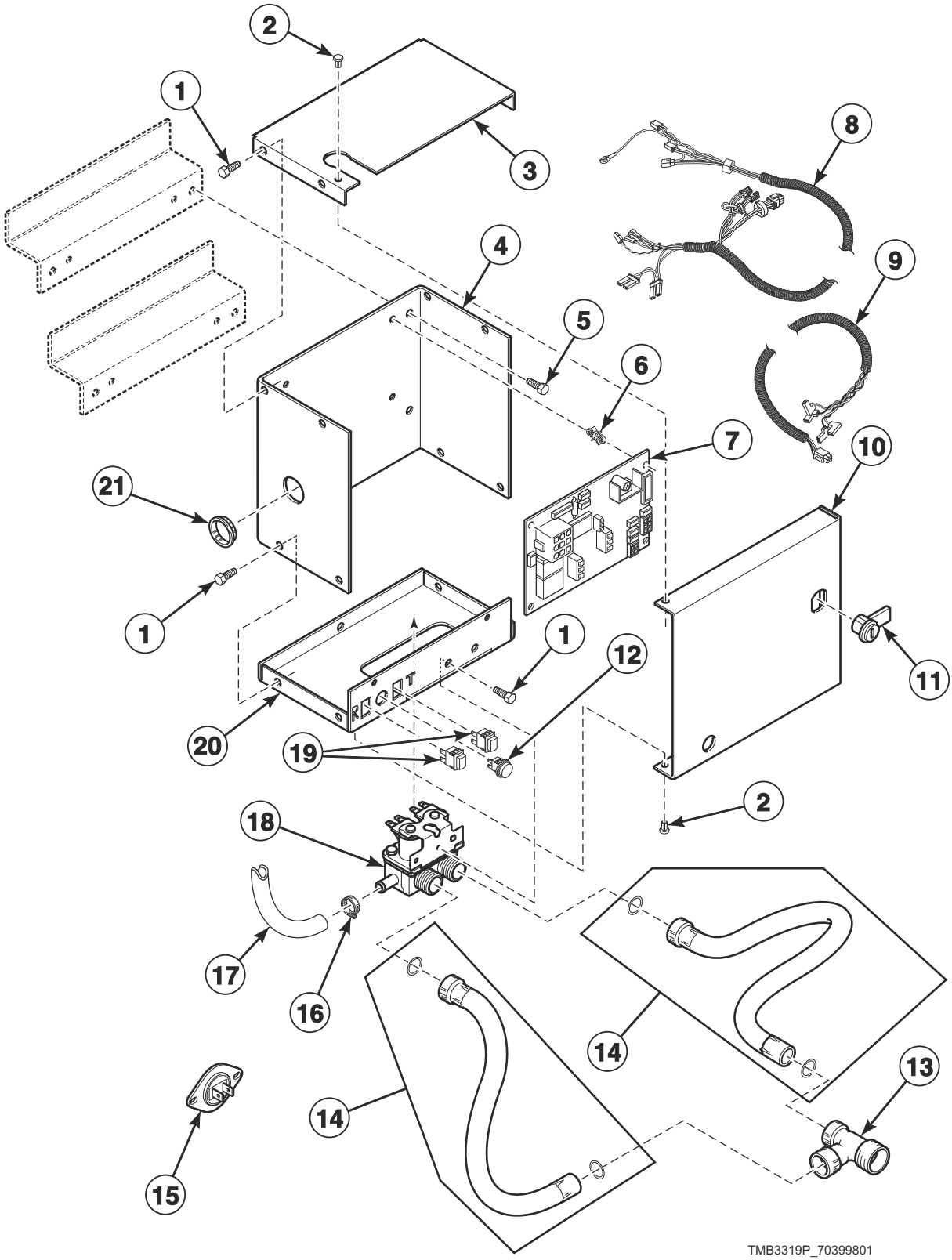

© Copyright, Alliance Laundry Systems LLC – DO NOT COPY or TRANSMIT

Fire Suppression System Control Box

REF	PART NO.	DESCRIPTION	COMMENTS
1	430497	Screw	
2	M400713	Drive Rivet	
3	44065401	Control Box Top	Top
4	44065101	Control Box Housing	
5	51780	Screw	
6	D501523	Circuit Board Support	4 required
7	44063801P	Control	
8	44157501P	Control Harness	CE models
	44080201P	Control Harness	All other models
9	44082701P	Sensor Harness Assembly	
10	44065201	Control Box Cover	
11	70733701	Lock, Key and Nut Kit	RL001 key code
	70155601	Key	RL001
12	801432	Light	Red
13	44069101	Hose Fitting	
14	F200116	Fill Hose	2 required
15	44064701	Thermistor	2 required
16	36801	Hose Clamp	
17	44073302	Hose	120 pound models; 21 inches; Outlet hose
	44073303	Hose	170 pound models; 31 inches; Outlet hose
18	36958P	Mixing Valve	
19	801434W	Push-to-Start Switch	2 required
20	44065301	Control Box Base	
21	70178701	Snap Bushing	

© Copyright, Alliance Laundry Systems LLC – DO NOT COPY or TRANSMIT

Cabinet Front Components (Drawing 1 of 2)

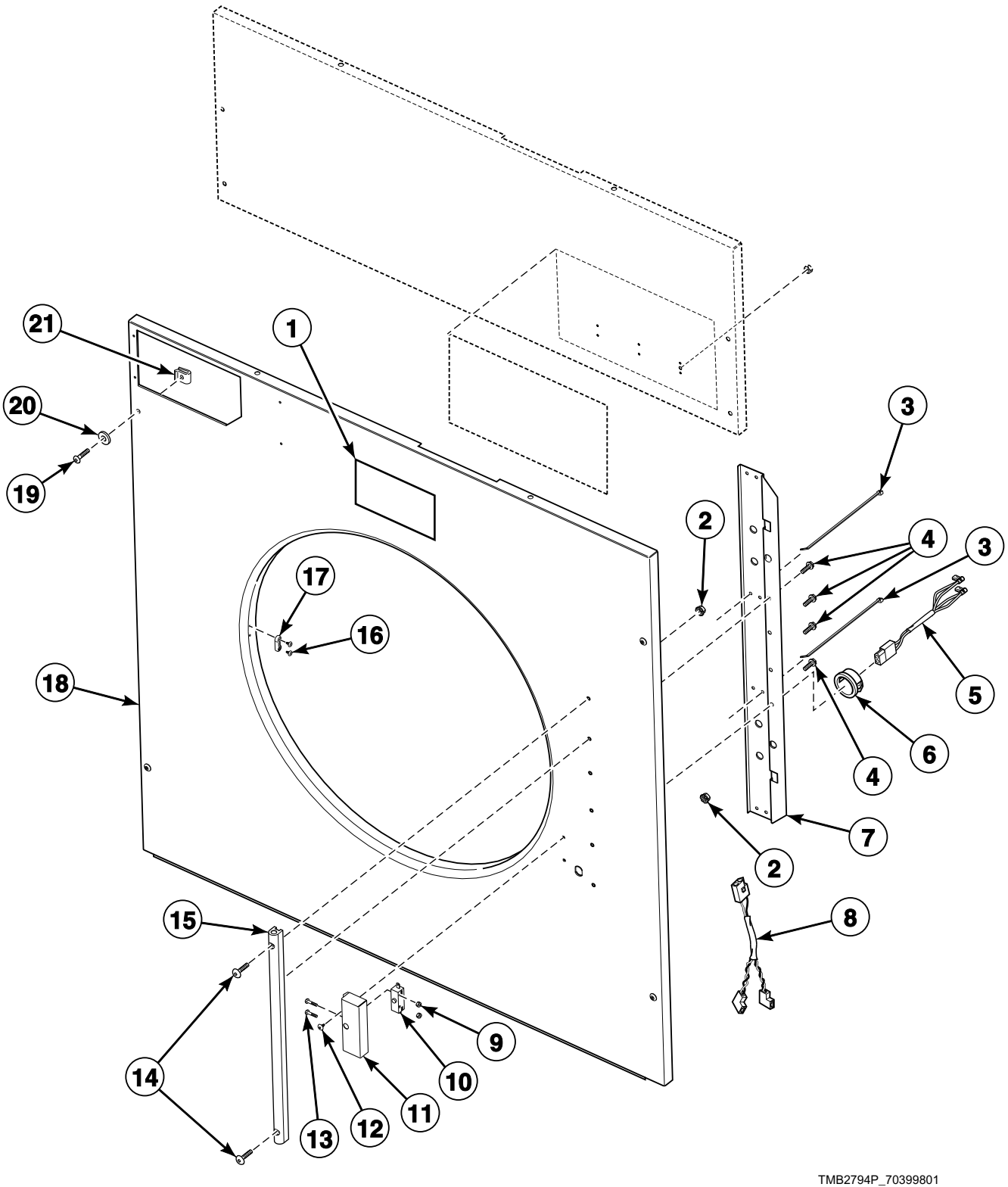

© Copyright, Alliance Laundry Systems LLC – DO NOT COPY or TRANSMIT

Cabinet Front Components (Drawing 1 of 2)

REF	PART NO.	DESCRIPTION	COMMENTS
	298P4P	Spray Paint	White
	297P4	Spray Paint	Almond
	381P4	Spray Paint	Bisque
	382P4	Spray Paint	Cream
	286P4	Spray Paint	Blue
	122P4P	Porcelain Touch-Up Paint	White
	215P4P	Porcelain Touch-Up Paint	Almond
	370P4P	Porcelain Touch-Up Paint	Bisque
1	70537101	Label	G and K models; F.S.S.
2	29786	Nut	2 required
3	55881	Harness Strap	2 required; Front panel harness to door switch wire channel
4	44023301	Screw	4 required
5	44019601P	Door Switch Harness	
6	70346501	Bushing	Required for door switch harness going through frame
7	44001801	Door Switch Wire Channel	120 pound models
	44001802	Door Switch Wire Channel	170 pound models
8	44019601P	Door Switch Harness	
9	02788	Nut	2 required
10	44018201	Door Switch	
11	44001301	Door Switch Cover	
12	431287	Screw	2 required
13	M402574	Screw	2 required
14	70033504	Screw	2 required
15	44035001	Door Hinge Lug Assembly	Includes bushings
16	M400072	Screw	2 required; Models through Serial No. 0305000001 except L models
	44166601	Pop Rivet	2 required; Models starting Serial No. 0305000001
17	M401223	Door Latch	
18	44012406W	Front Panel	120 pound models
	44012402	Front Panel	120 pound models; Stainless steel
	44078101*P	Front Panel Assembly	170 pound models
	44012502P	Front Panel	170 pound models; Stainless steel
19	70182601	Screw	4 required per panel
20	800465	Washer	4 required per panel
21	70030401	Nut	Access and front panel attachment

*** Add Letter To Designate Color. Q - Bisque W - White**

© Copyright, Alliance Laundry Systems LLC – DO NOT COPY or TRANSMIT

Cabinet Front Components (Drawing 2 of 2)

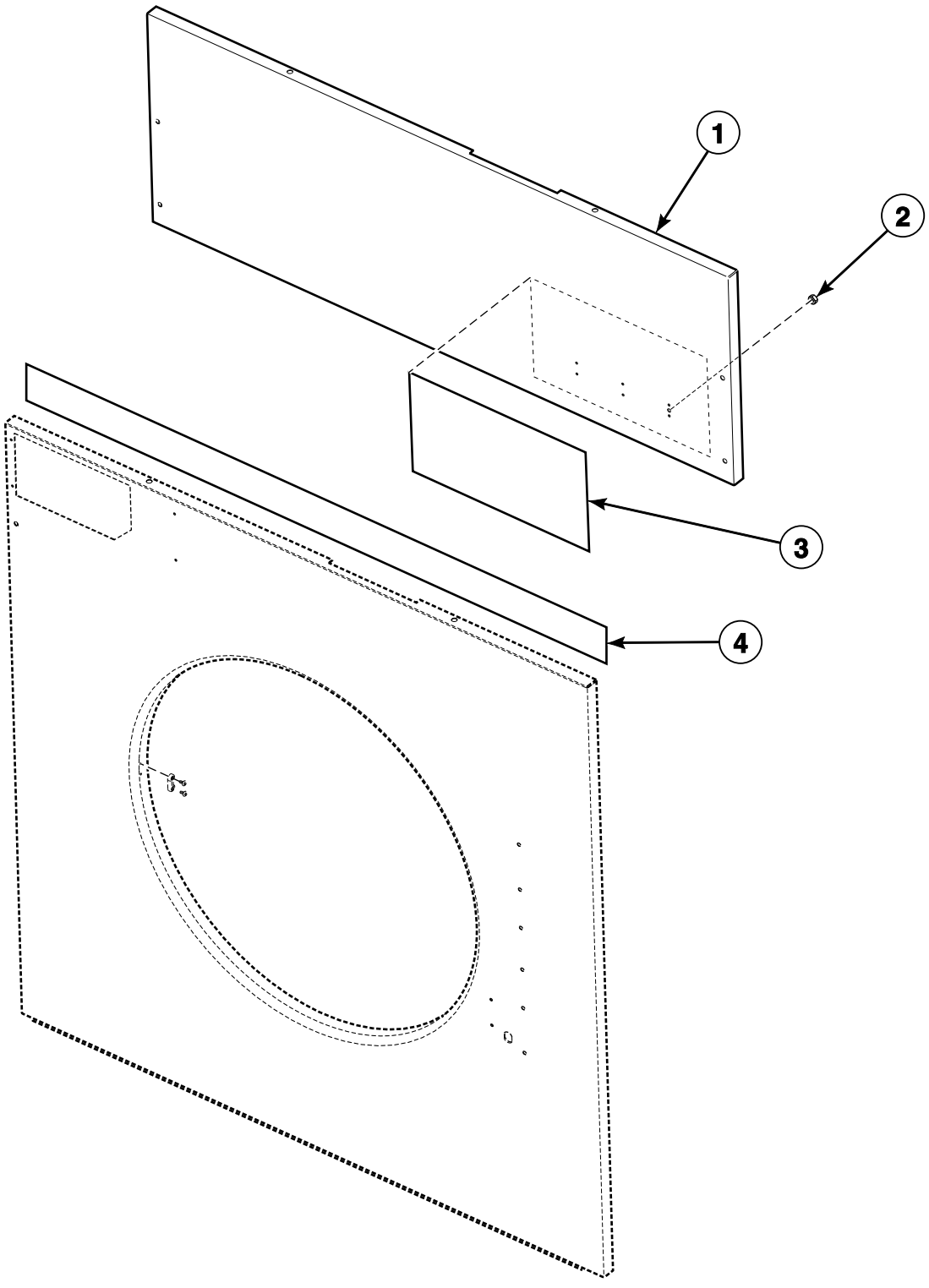

TMB2636P_70399801

© Copyright, Alliance Laundry Systems LLC – DO NOT COPY or TRANSMIT

Cabinet Front Components (Drawing 2 of 2)

REF	PART NO.	DESCRIPTION	COMMENTS
1	44012611	Front Access Panel	L, PT, PU and XT 120 pound models; Stainless steel
	44012702P	Access Panel	L, PT, PU, XT and XU 170 pound models; Stainless steel
	44012609W	Front Access Panel	CT, CU, G, H, I, K, L, P, S, U, W and Y 120 pound models; B 120 pound CE models
	44012612	Front Access Panel	CT, HT, I, ST and UT 120 pound models; Stainless steel
	44012709W	Front Access Panel	CT, G, H, I, K, S, U, W, XT and Y 170 pound models; B 170 pound CE models; LU and P 170 pound models
	44012714	Front Access Panel	CT, HT, ST and UT 170 pound models; B 170 pound CE models; Stainless steel
2	M400977	Nut	L and P models; For access panel trim; 2 required
3	44035801	Nameplate	X models
	44010401	Nameplate	H models
	44010601	Nameplate	S models
	70128901	Nameplate Overlay	P models
	70243901	Nameplate	L models
	M412963	Nameplate Overlay	U models
	44104501	Nameplate Overlay	Y models
	70348501	Nameplate	C models
	70348601	Nameplate	B and I models
	44130401	Nameplate Overlay	K 120 pound models
	44130501	Nameplate Overlay	K 170 pound models
	70410201	Nameplate Overlay	G models
4	70399403	Access Panel Trim	G and K 120 pound models; Mounts over front panel assembly and control panel
	70399404	Access Panel Trim	G and K 170 pound models; Mounts over front panel assembly and control panel

*** Add Letter To Designate Color. L - Almond Q - Bisque W - White**

N/A = Part no longer available

© Copyright, Alliance Laundry Systems LLC – DO NOT COPY or TRANSMIT

Door and Hinge Components - G, H, K, L, P, S, U, W, X and Y Models

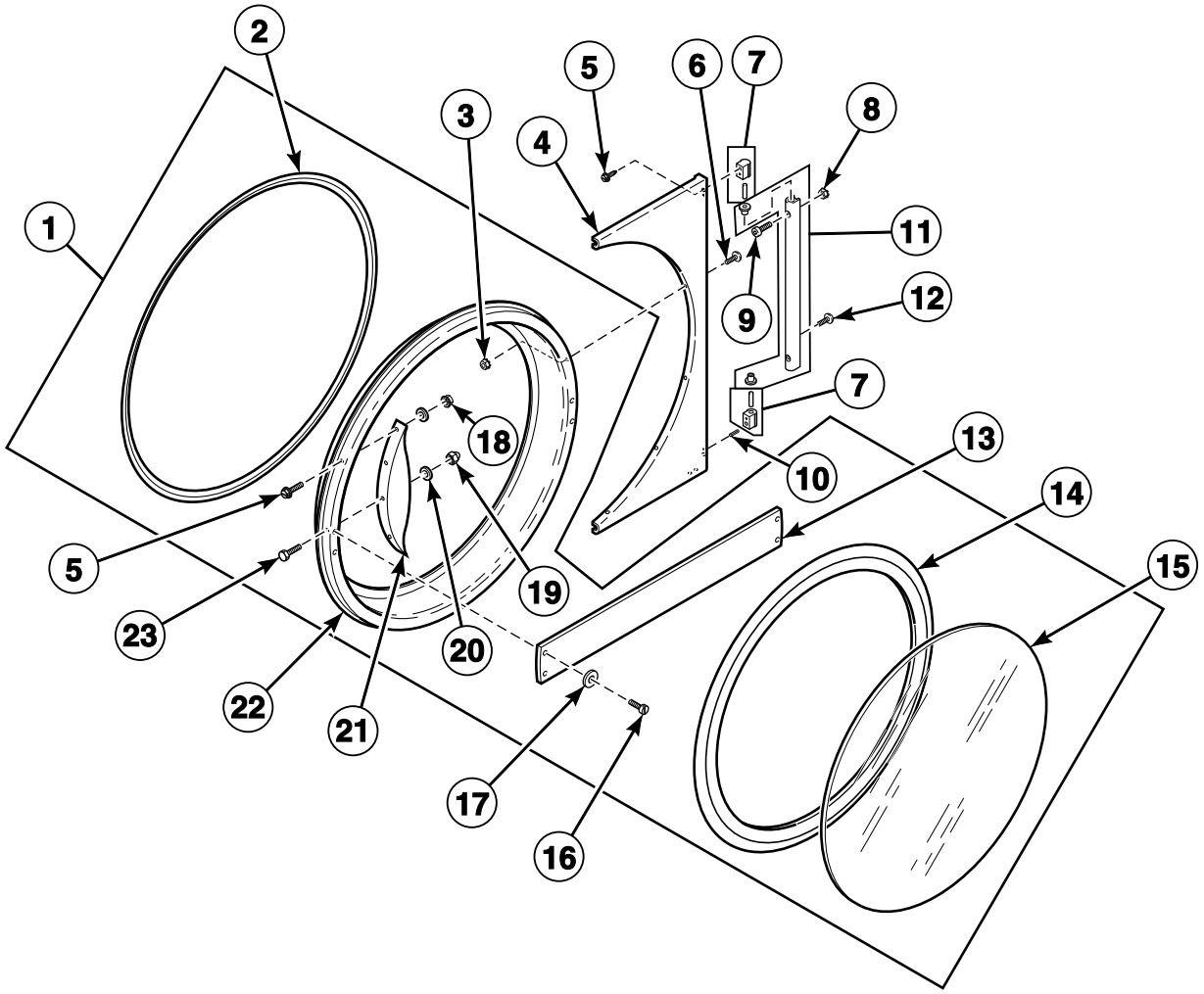

TMB2635P_70399801

© Copyright, Alliance Laundry Systems LLC – DO NOT COPY or TRANSMIT

Door and Hinge Components - G, H, K, L, P, S, U, W, X and Y Models

REF	PART NO.	DESCRIPTION	COMMENTS
	M4221P4	Door Glass Installation Tool	
1	44028902P	Door Assembly	S and U models; Includes door strike, nut and washer
	44058102P	Door Assembly	H models; Hinge not included; Includes door strike, nut and washer
	N/A	Door Assembly	L, P, W, X and Y models; Includes door strike, nut and washer
	70407401P	Door Assembly	G and K models
2	44008201P	Door Ring Gasket	
3	23951	Nut	6 required
4	44075207B	Door Hinge	G and K models
	44075201*	Door Hinge Assembly	All other models
	44075210	Door Hinge Assembly	All other models; Stainless steel
5	61199	Screw	3 required for cams; 4 required for handle
6	M400044	Screw	6 required
7	44035102	Door Hinge Cam Assembly	G and K models
	M4772P3	Hinge Cam Kit	All other models; Includes dowel; Upper and lower
8	29786	Nut	2 required
9	70409801	Screw	G and K models; 2 required
	70033504	Screw	All other models; 2 required
10	70126201	Screw	
11	44035002	Door Hinge Lug Assembly	G and K models; Includes bushings
	44035001	Door Hinge Lug Assembly	All other models; Includes bushings
12	44023301	Screw	4 required
13	70399501B	Handle Bar	G and K models
14	70211902P	Door Seal Kit	
15	44008401P	Door Glass	G, K, L, P, S, U, W, X and Y models
	44008402P	Door Glass	H models
16	70126301	Pop Rivet	G and K models; 4 required
17	70409301	Washer	G and K models; 2 required
18	70054	Nut	4 required
19	M414215	Nut	
20	800465	Washer	5 required
21	44007901	Door Handle	S and U models
	44057702	Door Handle	H, L, P, W, X and Y models; Includes M409385 Screw
22	44007703	Door Ring	G and K models
23	M400661	Screw	Door strike

*** Add Letter To Designate Color. Q - Bisque W - White**

N/A = Part no longer available

© Copyright, Alliance Laundry Systems LLC – DO NOT COPY or TRANSMIT

Door and Hinge Components - B, C and I Models

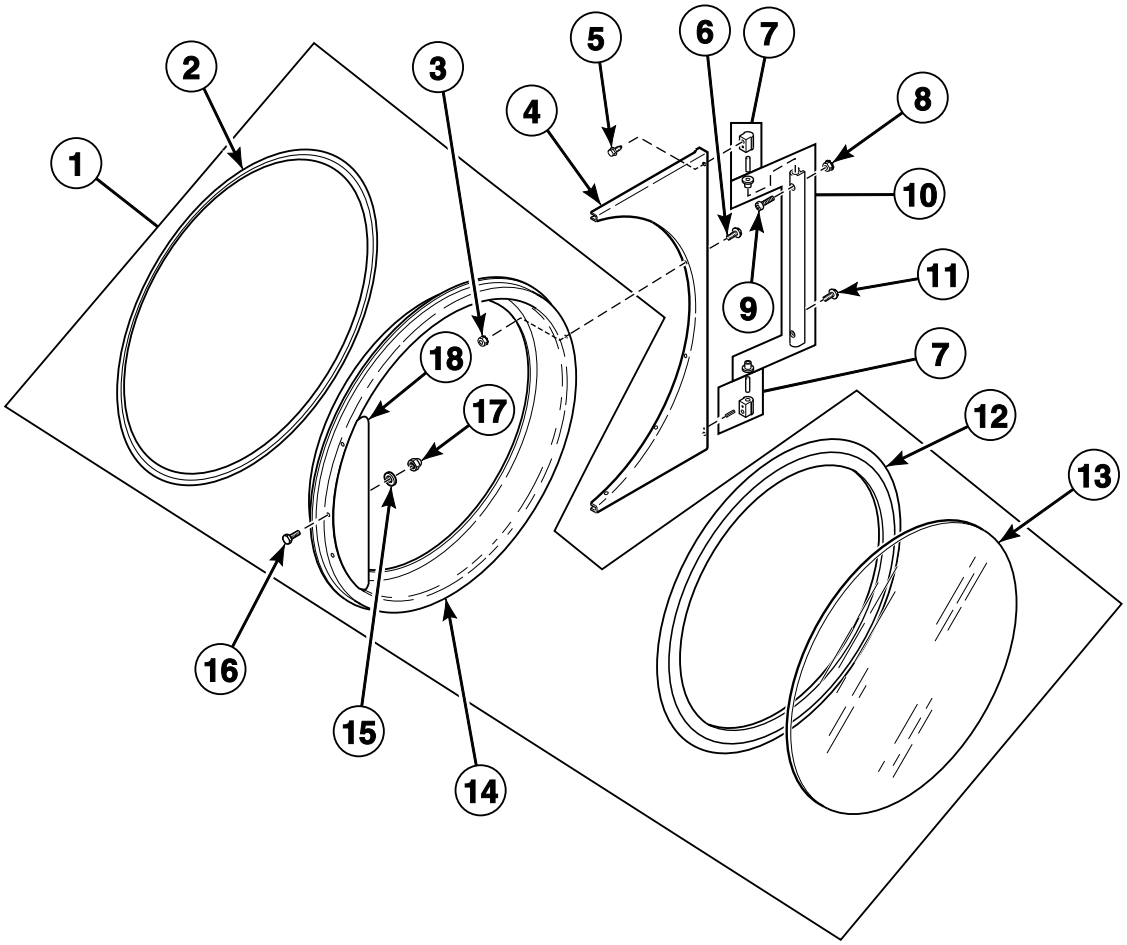

TMB2582P_70399801

© Copyright, Alliance Laundry Systems LLC – DO NOT COPY or TRANSMIT

Door and Hinge Components - B, C and I Models

REF	PART NO.	DESCRIPTION	COMMENTS
	M4221P4	Door Glass Installation Tool	
1	44112101	Door Assembly	
2	44008201P	Door Ring Gasket	
3	23951	Nut	6 required
4	70115902	Door Hinge	Stainless steel
5	61199	Screw	3 required, 2 in top cam and 1 in bottom
6	M400044	Screw	6 required
7	M4772P3	Hinge Cam Kit	
8	29786	Nut	2 required
9	70033504	Screw	2 required
10	44035001	Door Hinge Lug Assembly	Includes bushings
11	44023301	Screw	4 required
12	70211902P	Door Seal Kit	
13	44008401P	Door Glass	
14	44112001	Door Ring and Handle Assembly	Includes item 18
15	800465	Washer	
16	M400661	Screw	Door strike
17	M414215	Nut	
18	44111901	Door Handle	

© Copyright, Alliance Laundry Systems LLC – DO NOT COPY or TRANSMIT

Lint Panel Components

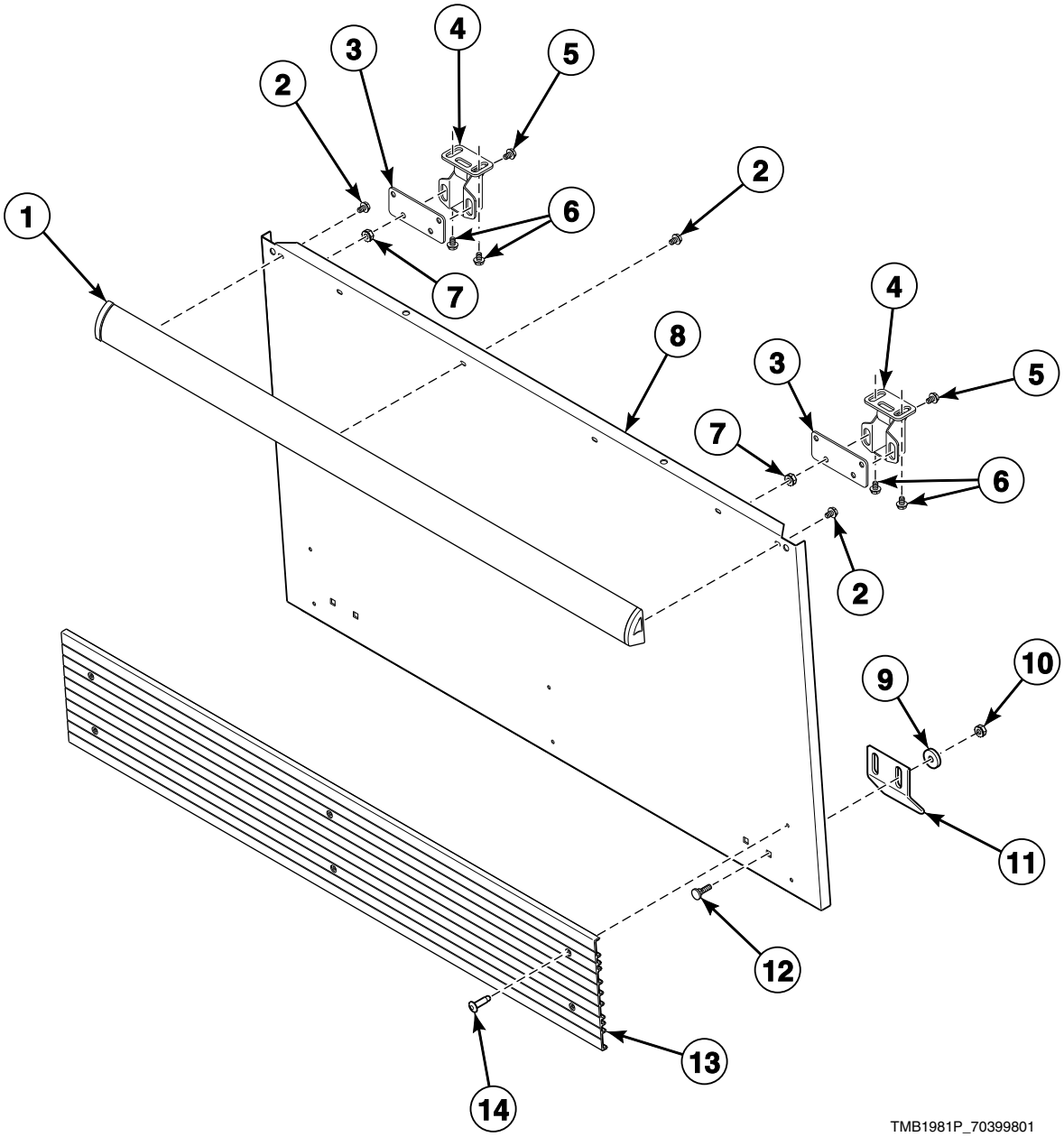

© Copyright, Alliance Laundry Systems LLC – DO NOT COPY or TRANSMIT

Lint Panel Components

REF	PART NO.	DESCRIPTION	COMMENTS
1	44049901	Handle and Caps Assembly	B, C, I, L, P, S, U, W, X and Y 120 pound models; Black; Includes endcaps
	44049902	Handle and Caps Assembly	H 120 pound models; Gray; Includes endcaps
	44049903	Handle and Caps Assembly	B, C, I, L, P, S, U, W, X and Y 170 pound models; Black
	44049904	Handle and Caps Assembly	H 170 pound models; Gray
	70407203	Handle Bumper	G and K 120 pound models; Black and blue; Does not have endcaps
	70407204	Handle Bumper	G and K 170 pound models; Black and blue; Does not have endcaps
2	430757	Screw	6 required
3	44014001	Roller Catch Mounting Bracket	2 required
4	H87020202	Roller Catch	2 required; Includes strike
5	61199	Screw	8 required
6	D501086	Screw	4 required
7	70054	Nut	8 required
8	44012201WP	Lint Panel	120 pound models
	44012202	Lint Panel	120 pound models; Stainless steel
	44012301WP	Lint Panel	170 pound models
	44012302P	Lint Panel	170 pound models; Stainless steel
9	M405535	Washer	4 required
10	44087101	Nut	4 required
11	44017801	Lint Panel Clip	2 required
12	44017901	Bolt	4 required
13	70117609	Kickplate	B, C, G, I, K, L, P, S, U, W, X and Y 120 pound models; Black
	70117610	Kickplate	H 120 pound models; Gray
	70117611	Kickplate	B, C, G, I, K, L, P, S, U, W, X and Y 170 pound models; Black
	70117612	Kickplate	H 170 pound models; Gray
14	70126301	Pop Rivet	B, C, G, I, K, L, P, S, U, W, X and Y models; Black; 6 required
	70126401	Pop Rivet	H models; Gray; 6 required

© Copyright, Alliance Laundry Systems LLC – DO NOT COPY or TRANSMIT

Lint Panel Switch Assembly

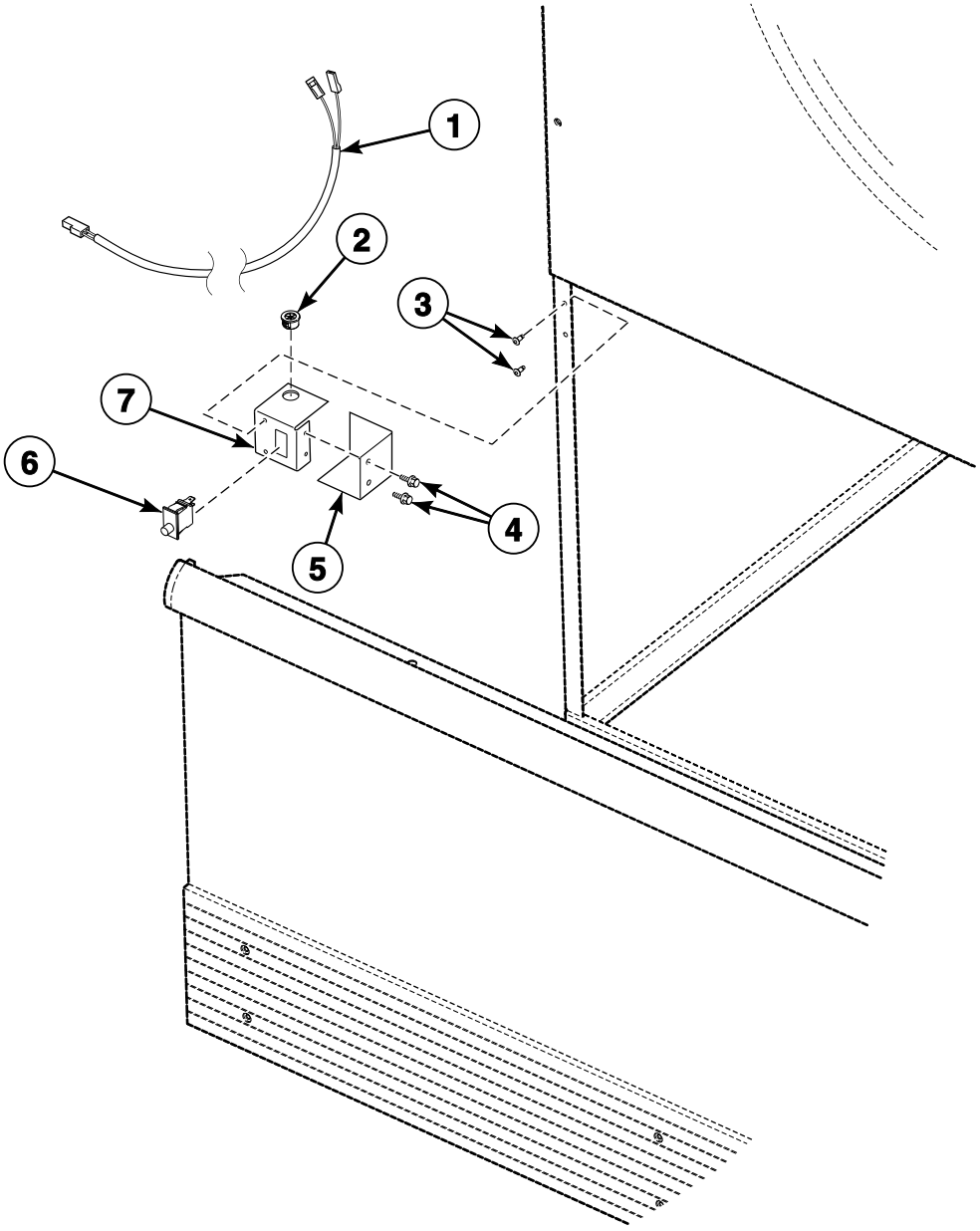

TMB2172P_70399801

© Copyright, Alliance Laundry Systems LLC – DO NOT COPY or TRANSMIT

Lint Panel Switch Assembly

REF	PART NO.	DESCRIPTION	COMMENTS
1	44019701P	Lint Panel Switch Harness	
2	M411537	Bushing	
3	430725	Pop Rivet	2 required
4	430497	Screw	2 required
5	44026801	Lint Panel Switch Cover	
6	70413301	Pushbutton Switch	
7	44013401	Lint Panel Switch Bracket	

© Copyright, Alliance Laundry Systems LLC – DO NOT COPY or TRANSMIT

Lint Screen and Drive Guard - 120 Pound Models

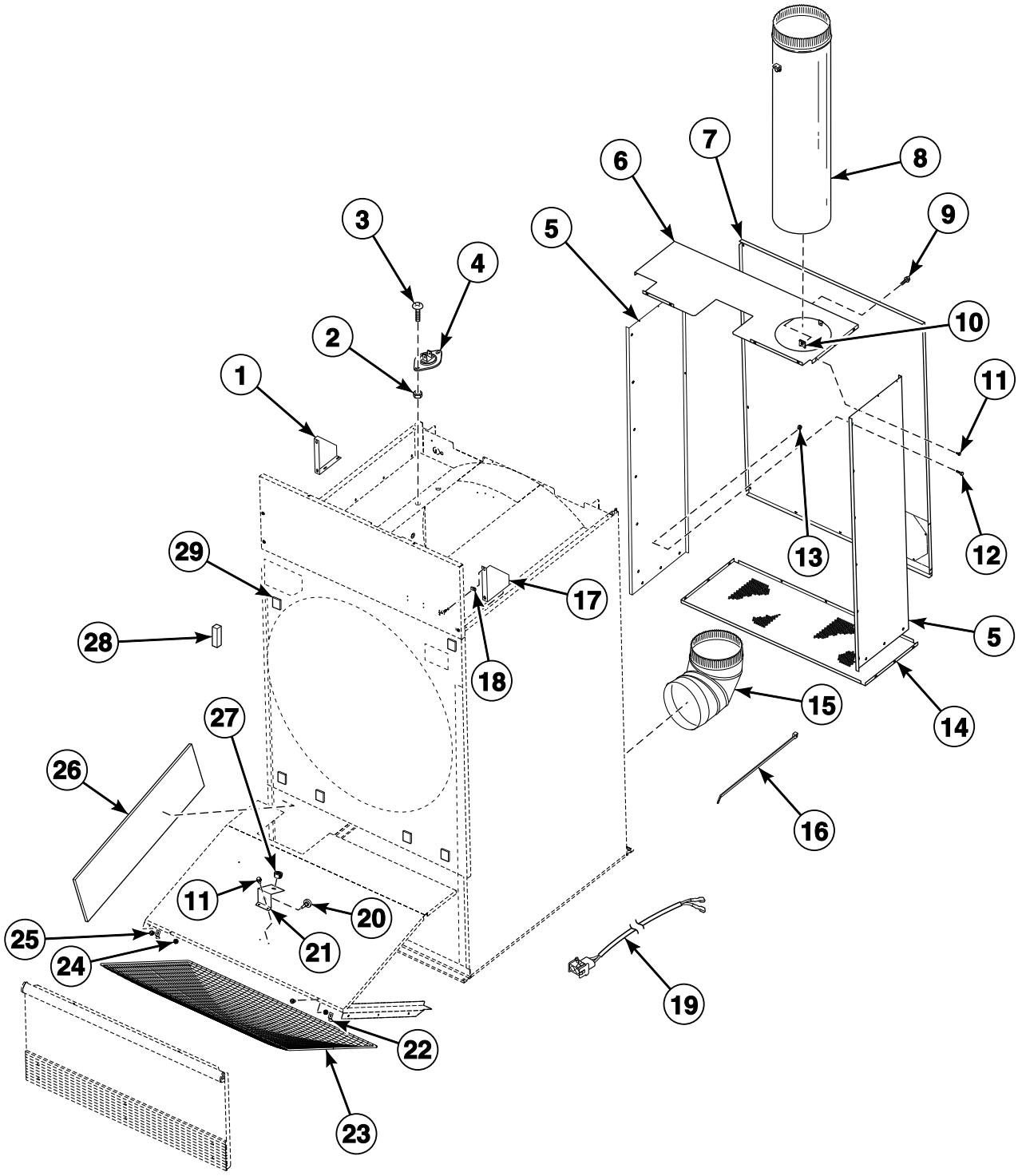

TMB2583P_70399801

© Copyright, Alliance Laundry Systems LLC – DO NOT COPY or TRANSMIT

Lint Screen and Drive Guard - 120 Pound Models

REF	PART NO.	DESCRIPTION	COMMENTS
1	44028202*	Top Access Panel Gusset	Left
2	23951	Nut	
3	430497	Screw	
4	44064701	Thermistor	2 required; For fire suppression system
5	M414491P	Belt Guard	Side; 2 required; Use 70015709 Gasket on edges
6	M411222	Belt Guard	Top
7	M414492P	Belt Guard	Cover
8	M411185	Vent Pipe	Gas models
	M411187	Vent Pipe	Steam models
9	M411072	Screw	
10	M400984	Clip	
11	430497	Screw	
12	F430116	Screw	
13	20274	Nut	
14	M411223P	Belt Guard	Bottom
15	H87494019	Vent Elbow	
16	M405829	Cable Tie	Required for thermistor harness
17	44028201*	Top Access Panel Gusset	Right
18	70030401	Nut	For access panel and front panel attachment
19	44319902P	Sensor Cable Harness	
20	M414704	Thermistor	
	B12308601	Temperature Sensor Assembly	PRO HC control replacement; Refer to Parts Information Insert 8-18-251 for list of machine serial numbers
21	44051301	Thermistor Bracket Assembly	Includes bracket and thermistor nut
22	H96418413	Lint Screen Clip	
23	44063602	Lint Screen	Includes frame
	44077702P	Lint Screen	Includes snaps; Frame not included
24	70054	Nut	
25	61199	Screw	
26	M413538	Insulation	
27	M411537	Bushing	2 required for thermistor harness and cabinet rear
28	70017301	Front Panel Baffle Seal	2 required; Use under lint rails
29	M402144	Felt Pad	6 required; Behind front panel

*** Add Letter To Designate Color. L - Almond Q - Bisque W - White**

© Copyright, Alliance Laundry Systems LLC – DO NOT COPY or TRANSMIT

Lint Screen and Drive Guard - 170 Pound Models

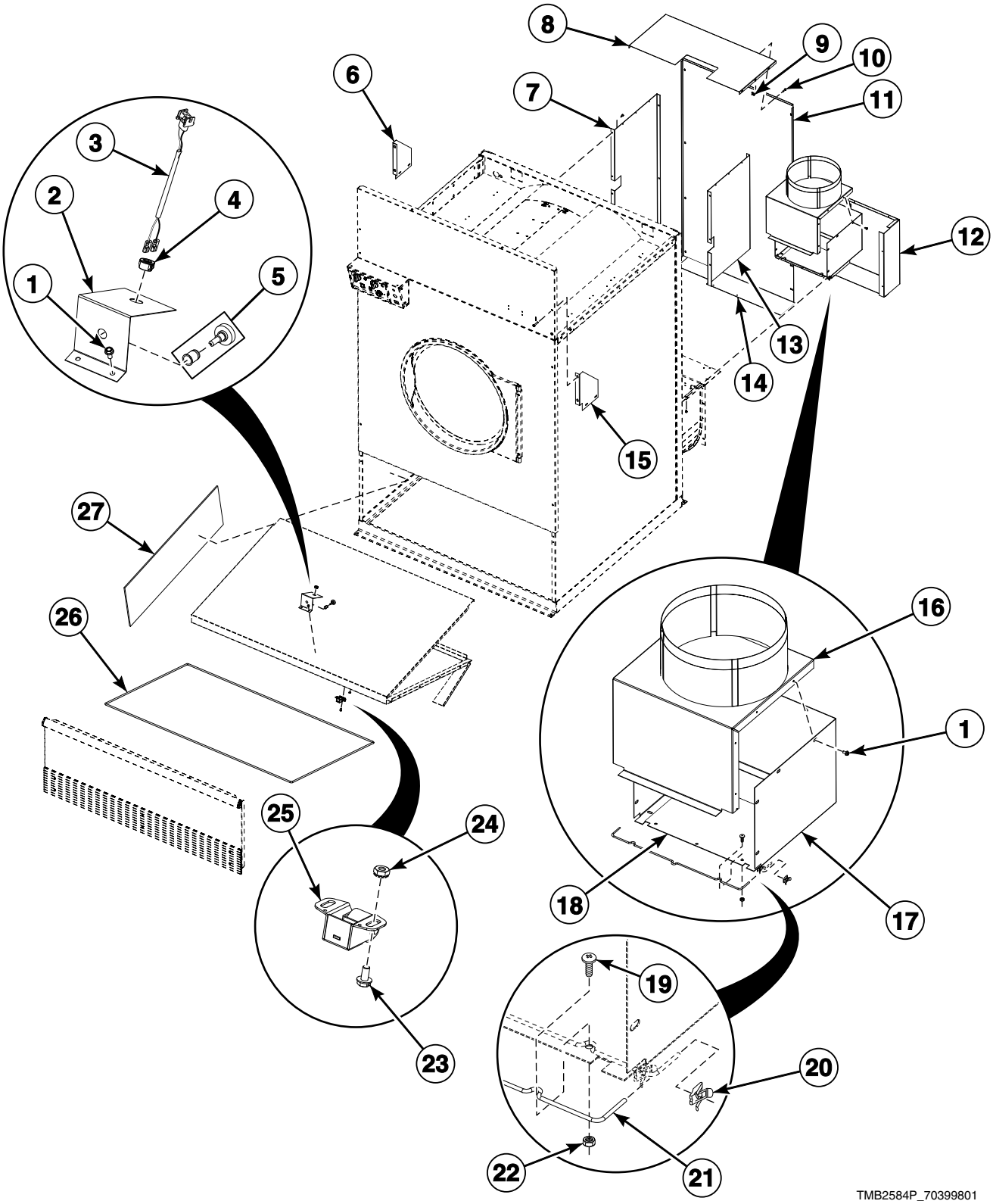

© Copyright, Alliance Laundry Systems LLC – DO NOT COPY or TRANSMIT

Lint Screen and Drive Guard - 170 Pound Models

REF	PART NO.	DESCRIPTION	COMMENTS
1	430497	Screw	
2	44051301	Thermistor Bracket Assembly	Includes bracket and thermistor nut
3	44319902P	Sensor Cable Harness	
4	M411537	Bushing	2 required for thermistor harness and cabinet rear
5	M414704	Thermistor	
	B12308601	Temperature Sensor Assembly	PRO HC control replacement; Refer to Parts Information Insert 8-18-251 for list of machine serial numbers
6	44028302*	Top Access Panel Gusset	Left
7	N/A	Belt Guard Side	Left; Use 70015709 Gasket on edges
8	N/A	Belt Guard Top	
9	M400984	Clip	12 required
10	M411072	Screw	12 required
11	M414284	Belt Guard Cover	
12	N/A	Belt Guard Corner	
13	N/A	Belt Guard Side	Right
14	N/A	Belt Guard Bottom	Attach with 2 of item 1
15	44028301*	Top Access Panel Gusset	Right
16	N/A	Box and Thimble Assembly	
17	N/A	Exhaust Duct Box Wrap	
18	M413402	Damper Vane	
19	M400044	Screw	3 required
20	M400976	Clip	
21	M413401	Damper Rod	
22	23951	Nut	3 required
23	61199	Screw	
24	70054	Nut	
25	H87020202	Roller Catch	Includes strike
26	44063603P	Lint Screen	Includes frame
	44077703P	Lint Screen	Includes snaps; Frame not included
27	M413538	Insulation	

*** Add Letter To Designate Color. L - Almond W - White**

N/A = Part no longer available

© Copyright, Alliance Laundry Systems LLC – DO NOT COPY or TRANSMIT

Cylinder and Trunnion Assembly

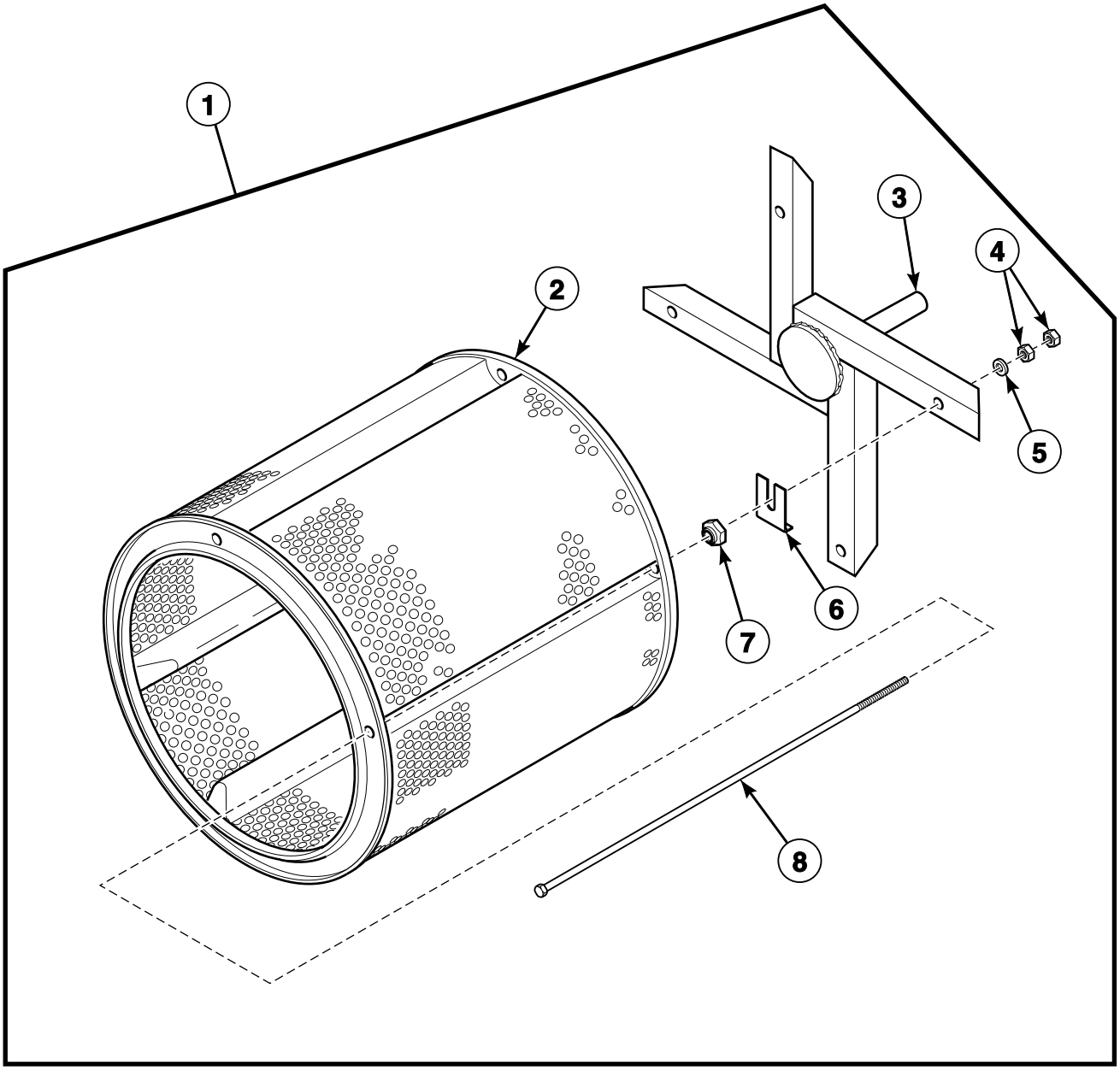

TMB1811B_70399801

© Copyright, Alliance Laundry Systems LLC – DO NOT COPY or TRANSMIT

Cylinder and Trunnion Assembly

REF	PART NO.	DESCRIPTION	COMMENTS
1	44054801	Cylinder and Trunnion Assembly	120 pound models; Galvanized
	44054802	Cylinder and Trunnion Assembly	120 pound models; Stainless steel
	44054701	Cylinder and Trunnion Assembly	170 pound models; Galvanized
	44054702	Cylinder and Trunnion Assembly	170 pound models; Stainless steel
2	H96427513	Cylinder Assembly	120 pound models; Galvanized; Includes rib rods and rib rod nuts
	M409788	Cylinder Assembly	120 pound models; Stainless steel; Includes rib rods and rib rod nuts
	H96367545	Cylinder Assembly	170 pound models; Galvanized; Includes rib rods and rib rod nuts
	M409826	Cylinder Assembly	170 pound models; Stainless steel; Includes rib rods and rib rod nuts
3	44055501	Trunnion Assembly	120 pound models
	44240801	Trunnion Assembly	170 pound models
4	H88412101	Nut	8 required
5	70261401	Washer	4 required
6	M401402	Spacer	As required
7	M412334	Nut	4 required
8	H8830143H	Bolt	4 required

© Copyright, Alliance Laundry Systems LLC – DO NOT COPY or TRANSMIT

Trunnion Bearings

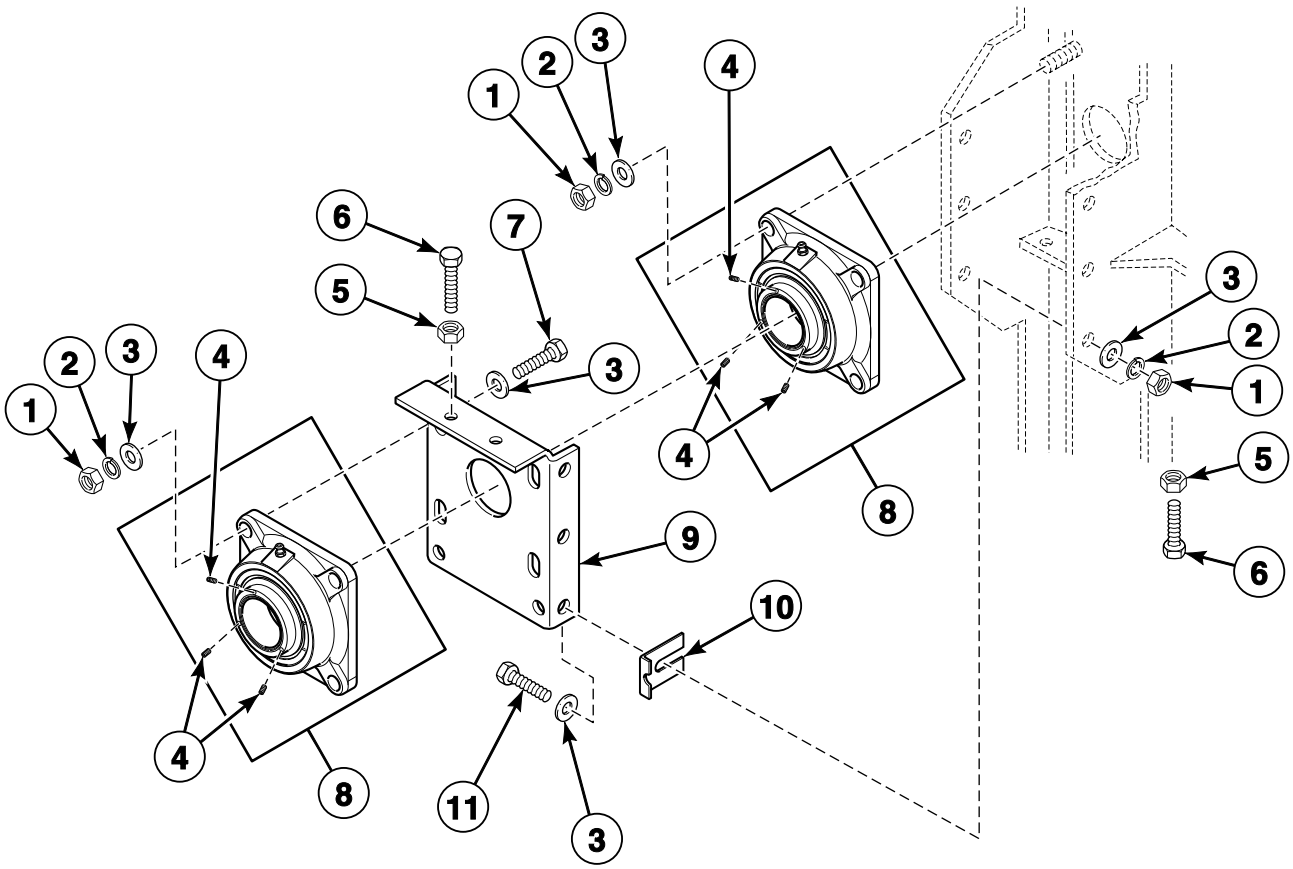

TMB2322P_70399801

© Copyright, Alliance Laundry Systems LLC – DO NOT COPY or TRANSMIT

Trunnion Bearings

REF	PART NO.	DESCRIPTION	COMMENTS
1	H88412101	Nut	
2	M400015	Washer	
3	70261401	Washer	
4	N/A	Screw	3 per flange bearing
5	20274	Nut	
6	H88213996	Screw	
7	M411165	Screw	
8	44048301P	Flange Bearing	Includes screws
9	H96428008	Bearing Mounting	
10	M401402	Spacer	As required
11	H88012034	Screw	

N/A = Part no longer available

© Copyright, Alliance Laundry Systems LLC – DO NOT COPY or TRANSMIT

Drive Sheave, Step Pulley and Belts

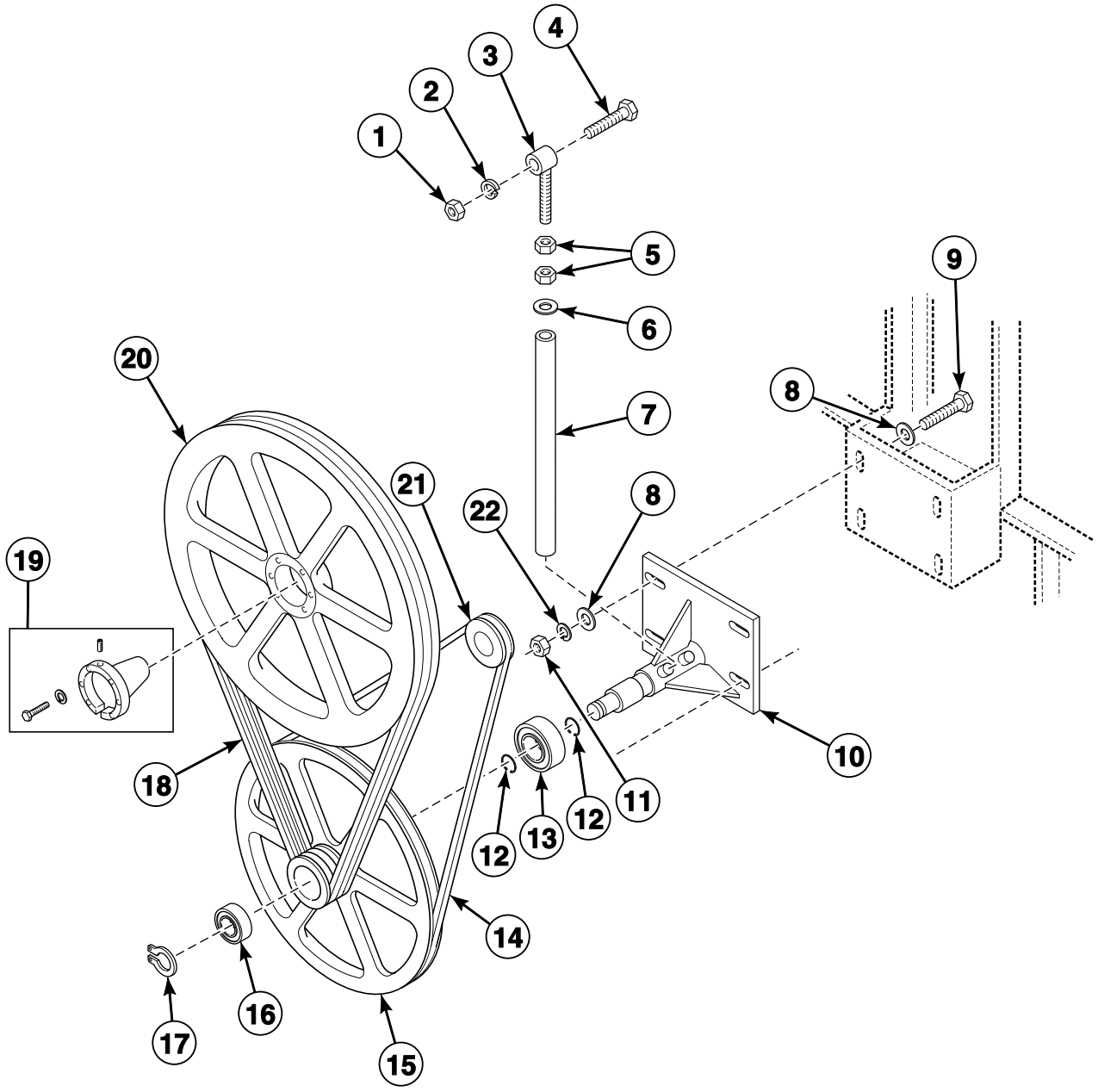

TMB2585P_70399801

© Copyright, Alliance Laundry Systems LLC – DO NOT COPY or TRANSMIT

Drive Sheave, Step Pulley and Belts

REF	PART NO.	DESCRIPTION	COMMENTS
1	H88412093	Nut	Models through 9/7/08
	H88412101	Nut	Models starting 9/8/08
2	N/A	Washer	
3	44048501	Rod End	Eyebolt assembly
4	H88001565	Screw	Models through 9/7/08
	M400063	Screw	Models starting 9/8/08
5	H88412101	Nut	
6	70261401	Washer	
7	H96428487	Belt Adjustment Tube	
8	M400081	Washer	8 required
9	22688	Screw	4 required
10	H96357751	Jackshaft Assembly	
11	20274	Nut	4 required
12	H88603477	Retaining Ring	Step pulley bearings stops; 2 required
13	H87672374	Ball Bearing	Inner; Step pulley
14	H87533014	Belt	
15	M4696P3	Step Pulley and Bearing Kit	Includes H96428024 Step Pulley, M414321 Spacer, M4718P3 Step Pulley Outer Bearing Kit and items 12, 13 and 16
16	M414367	Ball Bearing	Outer
17	H88602263	Retaining Ring	Step pulley to jackshaft
18	H87533816P	Belt Set	Set of 3
19	H8752985HP	Bushing	Includes M400014 Washer, 44048902 Screw, 44079204 Screw and 44049001 Key
20	H8752251H	Sheave	
21	H87520334	Sheave	120 pound models; 50 Hertz; 3.35 inch OD
	H87520466	Sheave	120 pound models; 60 Hertz; 4.12 inch OD
	H8752026H	Sheave	170 pound models; 50 Hertz; 2.65 inch OD
	H87520334	Sheave	170 pound models; 60 Hertz; 3.35 inch OD
22	M400014	Washer	4 required

N/A = Part no longer available

© Copyright, Alliance Laundry Systems LLC – DO NOT COPY or TRANSMIT

Cylinder Drive Motor

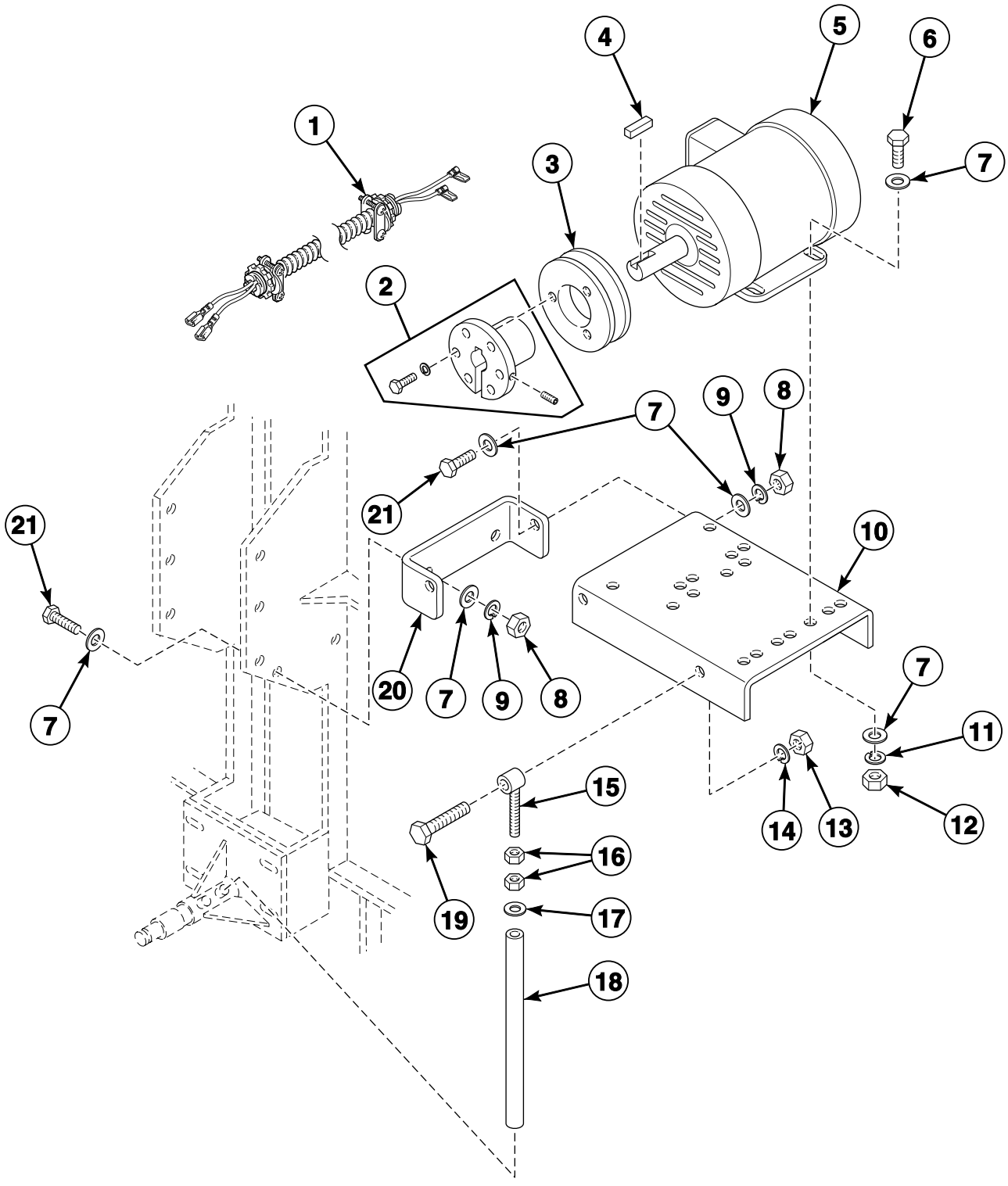

© Copyright, Alliance Laundry Systems LLC – DO NOT COPY or TRANSMIT

Cylinder Drive Motor

REF	PART NO.	DESCRIPTION	COMMENTS
1	N/A	Cylinder Motor Harness	Non-CE models; 3 Phase
	M413110	Cylinder Motor Harness Assembly	CE models; 3 Phase
2	H87529111P	Bushing	Includes 44079301 Screw, 44048901 Screw and 56552 Washer; Key not included
3	H87520466	Sheave	120 pound models; 60 Hertz; 4.12 inch OD
	H87520334	Sheave	120 pound models 50 Hertz; 170 pound models 60 Hertz; 3.35 inch OD
	H8752026H	Sheave	170 pound models; 50 Hertz; 2.65 inch OD
4	H8752006H	Key	
5	44052901P	Motor	208-460 Volt/60 Hertz/3 Phase; Includes key; No capacitor
	44053001P	Motor	200-415 Volt/50 Hertz/3 Phase; Includes key; No capacitor
6	M400056	Screw	
7	M400080	Washer	
8	20274	Nut	
9	M400014	Washer	
10	M413171	Motor Base	
11	M400013	Washer	
12	70142	Nut	
13	H88412093	Nut	Models through 9/7/08
	H88412101	Nut	Models starting 9/8/08
14	N/A	Washer	
15	44048501	Rod End	Eyebolt assembly
16	H88412101	Nut	
17	70261401	Washer	
18	N/A	Belt Adjustment Tube	
19	H88001565	Screw	Models through 9/7/08
	M400063	Screw	Models starting 9/8/08
20	H96428693	Base Bracket	
21	22688	Screw	

N/A = Part no longer available

© Copyright, Alliance Laundry Systems LLC – DO NOT COPY or TRANSMIT

Fan Assembly - 120 Pound 50 Hertz Models

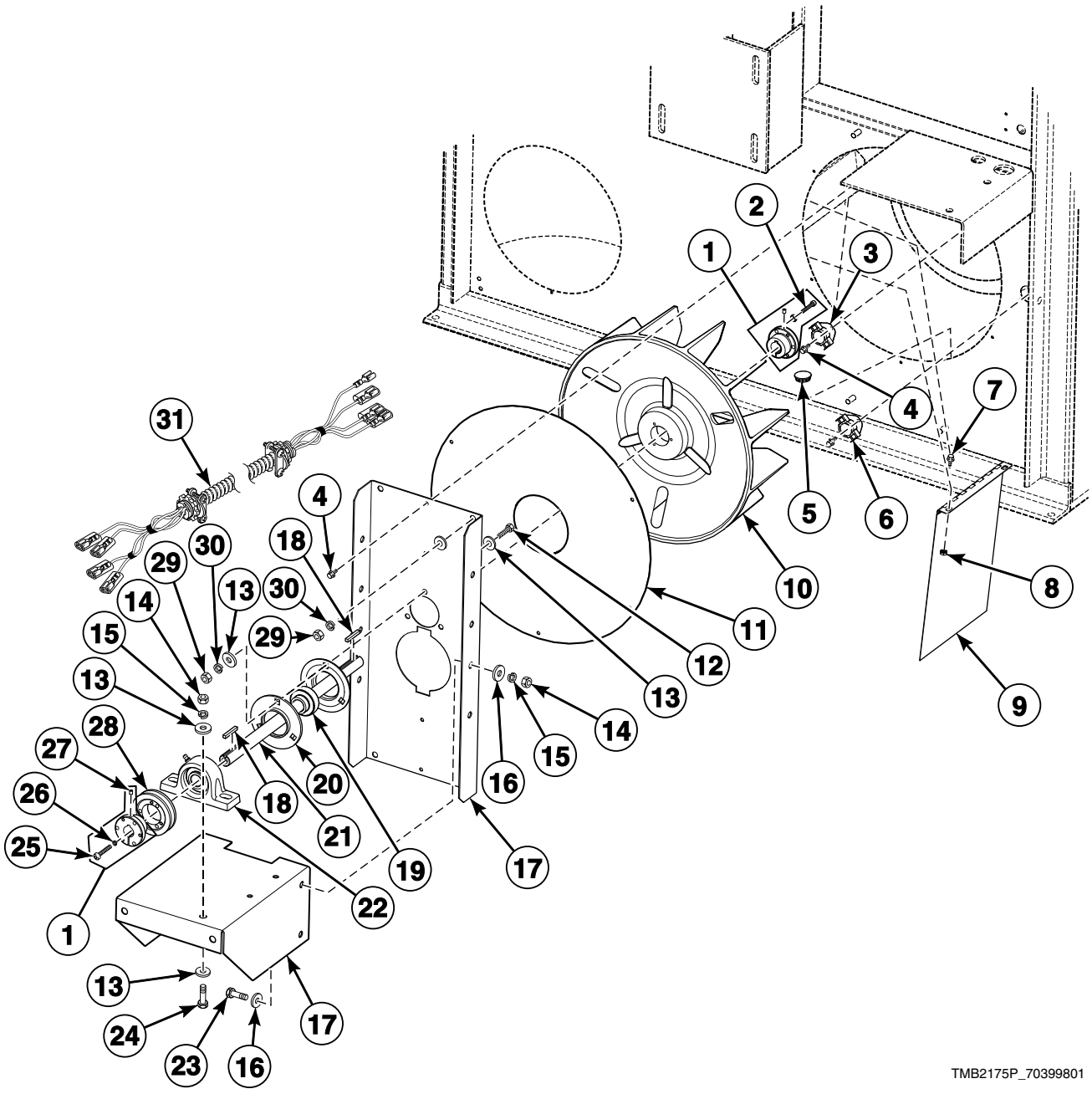

© Copyright, Alliance Laundry Systems LLC – DO NOT COPY or TRANSMIT

Fan Assembly - 120 Pound 50 Hertz Models

REF	PART NO.	DESCRIPTION	COMMENTS
1	M412917P	Bushing	2 required; Includes screws and washers; Key not included
2	H8800901H	Screw	3 required
3	M411403	Limit Thermostat	Gas models
	M411946	Limit Thermostat	B Australian and CE gas models: CA, CU, GA, GU, HA, HU, KA, KU, LA, LU, PA, PU, SA, SU, UA, UU and XU gas models; Manual reset
4	430497	Screw	
5	M400985	Plug	
6	H8900530H	Thermostat	Load ready; Models with RT control suffix; Non-functional on models with RM and RQ control suffixes
7	61199	Screw	
8	70054	Nut	
9	M409967	Damper Assembly	
10	M414546	Fan and Bushing Assembly	Discard bushing on 50 Hertz models
11	H96358007	Blower Cover	
12	M400056	Screw	3 required
13	M400080	Washer	10 required
14	20274	Nut	6 required
15	M400014	Washer	4 required
16	M400081	Washer	8 required
17	H608P3	Blower Motor Base Kit	
18	H8752006H	Key	2 required
19	H8768212H	Ball Bearing Insert	
20	H8768302H	Bearing Mounting Flangette	2 required
21	M412000	Blower Shaft	
22	44104801	Ball Bearing	
23	F430116	Screw	4 required
24	22688	Screw	2 required
25	44079301	Screw	3 required
26	56552	Washer	6 required
27	44048901	Screw	
28	H87520284	Sheave	2.8 inch OD
29	70142	Nut	3 required
30	M400013	Washer	3 required
31	44022701	Cabinet Limit Harness	Non-CE gas models
	M414261	Cabinet Limit Harness Assembly	CU, GU, HU, KU, LU, PU, SU, UU, XU and YU models; RM and RQ control suffixes
	N/A	Limit Harness	HU, PU, SU, UU and XU models; RT control suffix
	44108101P	Cabinet Limit Harness	CA, CT, GA, GT, HA, HT, I, KA, KT, LA, LT, PA, PT, SA, ST, UA, UT, W, XT and YT models; RM and RQ control suffixes; Models starting 7/24/06

N/A = Part no longer available

© Copyright, Alliance Laundry Systems LLC – DO NOT COPY or TRANSMIT

Fan Motor Assembly - 120 Pound 50 Hertz Models

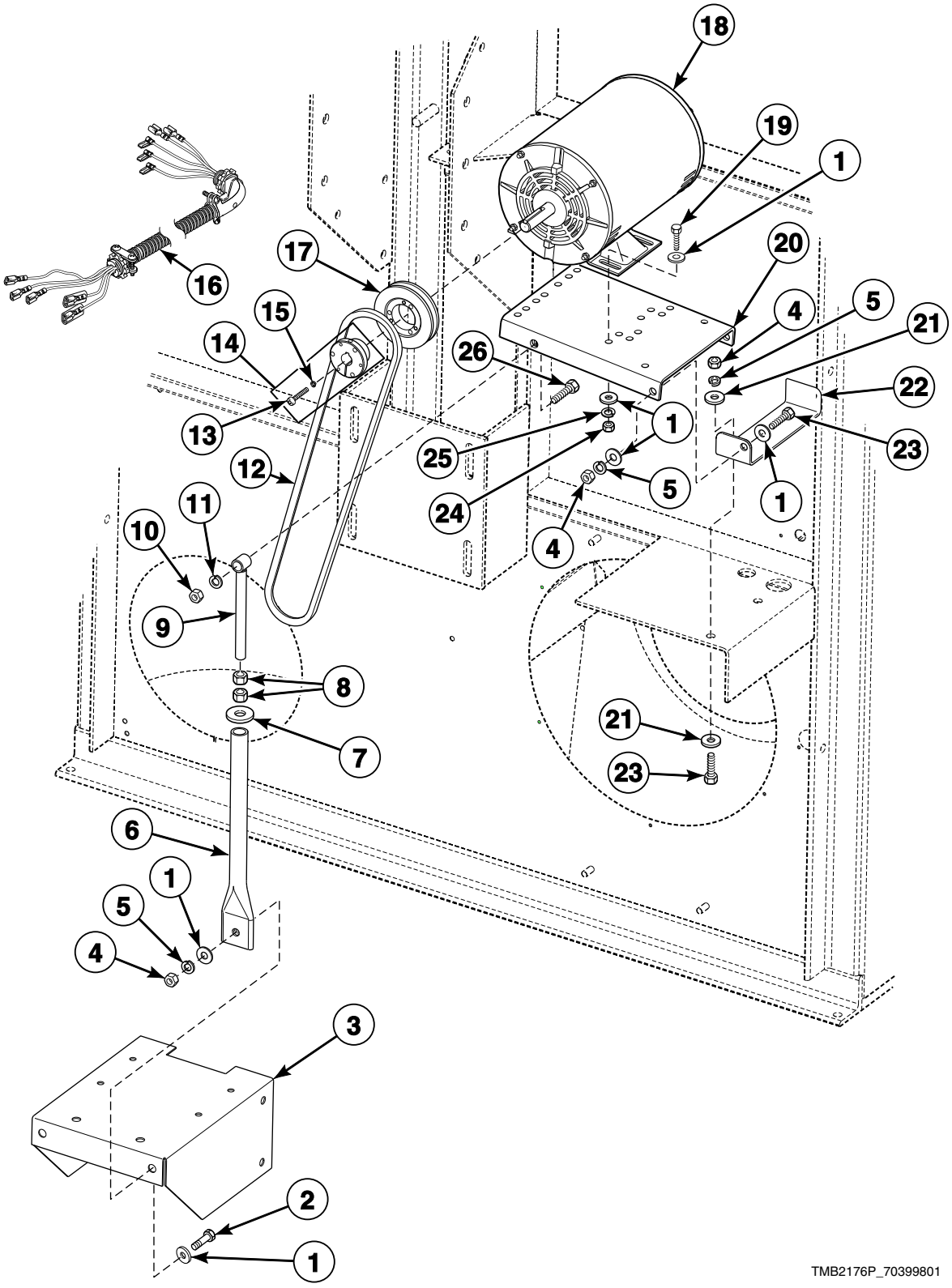

© Copyright, Alliance Laundry Systems LLC – DO NOT COPY or TRANSMIT

Fan Motor Assembly - 120 Pound 50 Hertz Models

REF	PART NO.	DESCRIPTION	COMMENTS
1	M400080	Washer	
2	F430116	Screw	
3	H608P3	Blower Motor Base Kit	Bracket
4	20274	Nut	
5	M400014	Washer	
6	H96428628	Motor Adjustment Tube	
7	70261401	Washer	
8	H88412101	Nut	
9	44048501	Rod End	Eyebolt assembly; Belt adjuster
10	H88412093	Nut	
11	N/A	Washer	
12	H8753170H	Belt	
13	44079301	Screw	3 required
14	H87529111P	Bushing	Includes screws and washers; Key not included
15	56552	Washer	3 required
16	44022401	Fan Motor Harness	Non-CE models
	M413111	Fan Motor Harness Assembly	CE models
17	H87520334	Sheave	3.35 inch OD
18	44046401P	Fan Motor	200, 240, 380 and 415 Volt; No capacitor
19	M400056	Screw	
20	M413171	Motor Base	
21	M400081	Washer	
22	H96428693	Base Bracket	
23	22688	Screw	
24	70142	Nut	
25	M400013	Washer	
26	H88001565	Screw	

N/A = Part no longer available

© Copyright, Alliance Laundry Systems LLC – DO NOT COPY or TRANSMIT

Fan and Fan Motor Assembly - 120 Pound 60 Hertz Models

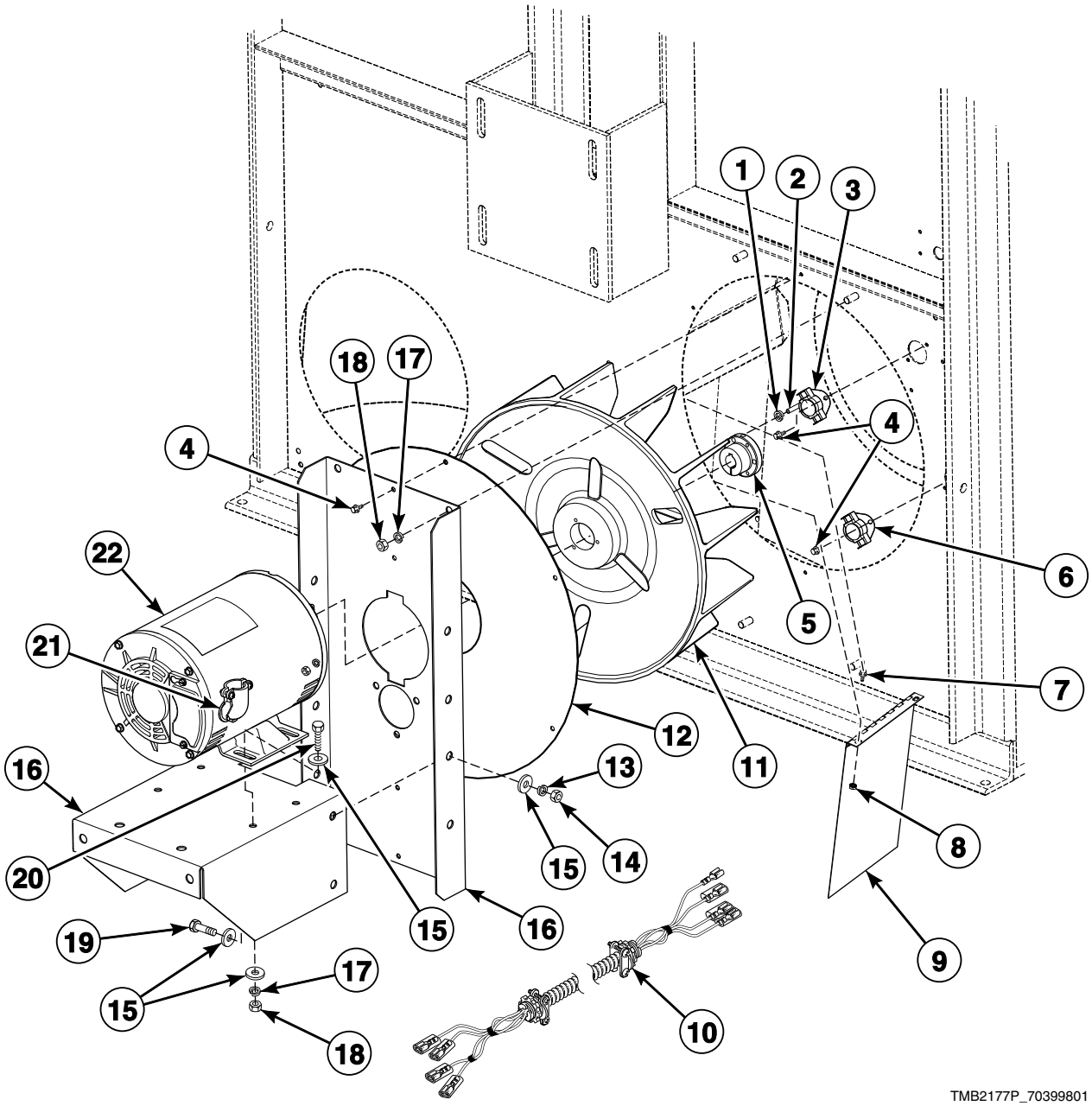

© Copyright, Alliance Laundry Systems LLC – DO NOT COPY or TRANSMIT

Fan and Fan Motor Assembly - 120 Pound 60 Hertz Models

REF	PART NO.	DESCRIPTION	COMMENTS
1	56552	Washer	
2	H8800901H	Screw	3 required; Fan bushing
3	M411403	Limit Thermostat	
4	430497	Screw	
5	H87529111P	Bushing	Includes screws and washers; Key not included
6	H8900530H	Thermostat	Load ready; Models with RT control suffix; Non-functional on models with RM and RQ control suffixes
7	61199	Screw	
8	70054	Nut	
9	M409967	Damper Assembly	
10	44022701	Cabinet Limit Harness	Gas models except L models through 7/26/06
	44108101P	Cabinet Limit Harness	Models starting 7/26/06
11	M414546	Fan and Bushing Assembly	Included with item 5 and hardware
12	H96358007	Blower Cover	
13	M400014	Washer	
14	20274	Nut	
15	M400080	Washer	
16	H608P3	Blower Motor Base Kit	
17	M400013	Washer	
18	70142	Nut	
19	F430116	Screw	4 required
20	M400056	Screw	4 required
21	M403862	Connector	
22	44046301P	Motor	200-208, 240, 460-480 Volt; No capacitor

© Copyright, Alliance Laundry Systems LLC – DO NOT COPY or TRANSMIT

Fan Assembly - 170 Pound Models

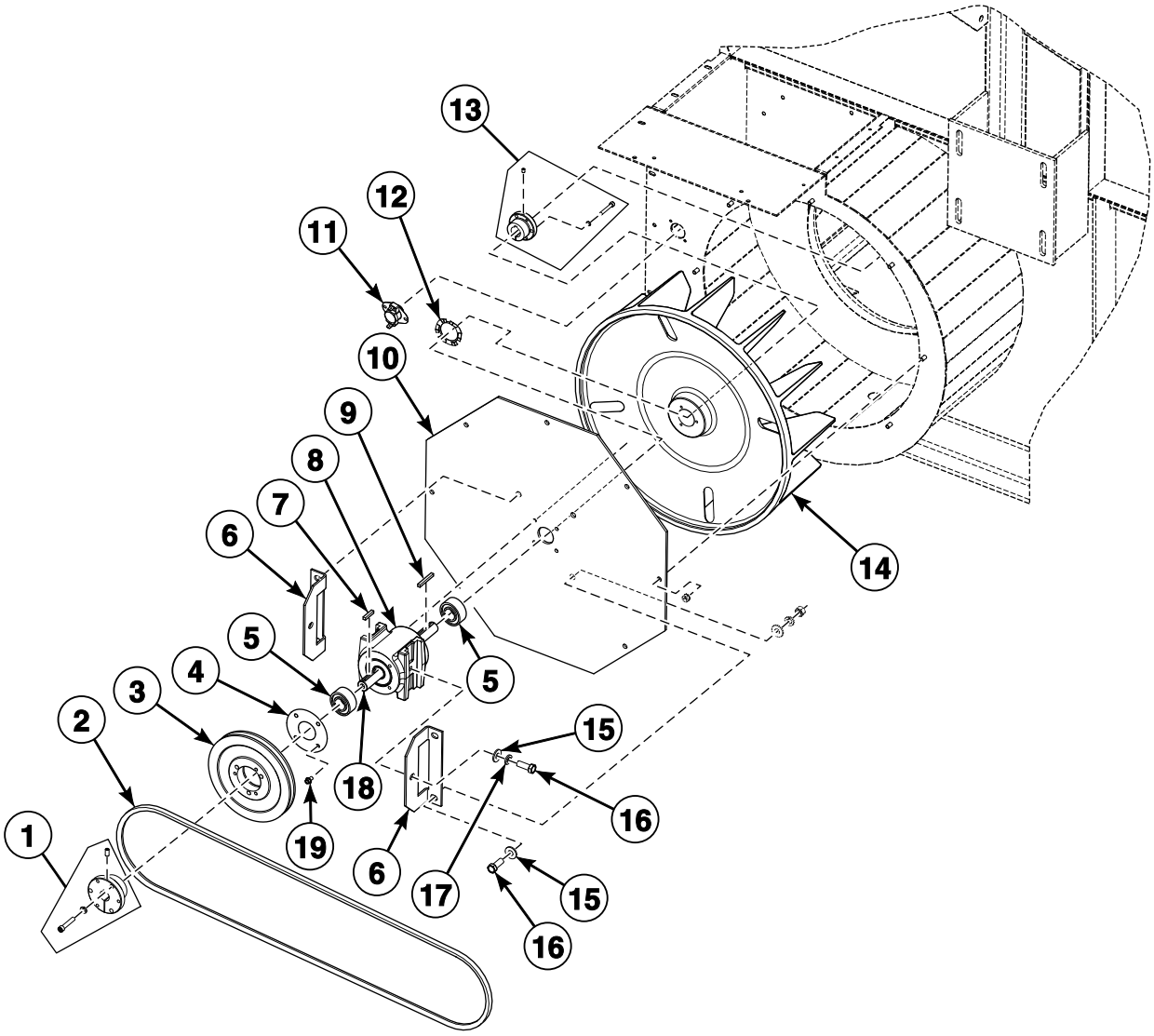

TMB2586P_70399801

© Copyright, Alliance Laundry Systems LLC – DO NOT COPY or TRANSMIT

Fan Assembly - 170 Pound Models

REF	PART NO.	DESCRIPTION	COMMENTS
	M412630	Idler Housing Assembly	Includes items 5, 8 and 18
1	H8752922HP	Bushing	Includes 44079202 Screw, 03189 Washer and 44048902 Screw
2	H87532685	Belt	
3	H8752060H	Sheave	6 inch OD; 50 Hertz
	H8752065H	Sheave	6.5 inch OD; 60 Hertz
4	M401370	Bearing Retainer	
5	M401375P	Ball Bearing	2 required for item 8
6	M414235	Fan Bearing Bracket	2 required
7	M401327	Key	
8	M412612	Idler Housing	
9	M400993	Key	
10	M414237	Blower Cover	
11	M411403	Limit Thermostat	184 closed
	M411946	Limit Thermostat	184 closed; Manual reset; B Australian and CE models; CA, CU, GA, GU, HA, HU, KA, KU, LA, LU, PA, PU, SA, SU, UA, UU and XU models
	H8900530H	Thermostat	135 closed; Models with RT control suffix; Non-functional on models with RM and RQ control suffixes
12	M400401	Loading Spring	
13	M412917P	Bushing	Includes 44079301 Screw, 56552 Washer and 44048901 Screw
14	H96368469	Fan	
15	M400080	Washer	
16	F430116	Screw	6 required
17	M400014	Washer	
18	M414241	Idler Shaft	
19	70187202	Screw	8 required

© Copyright, Alliance Laundry Systems LLC – DO NOT COPY or TRANSMIT

Fan Motor Assembly - 170 Pound Models

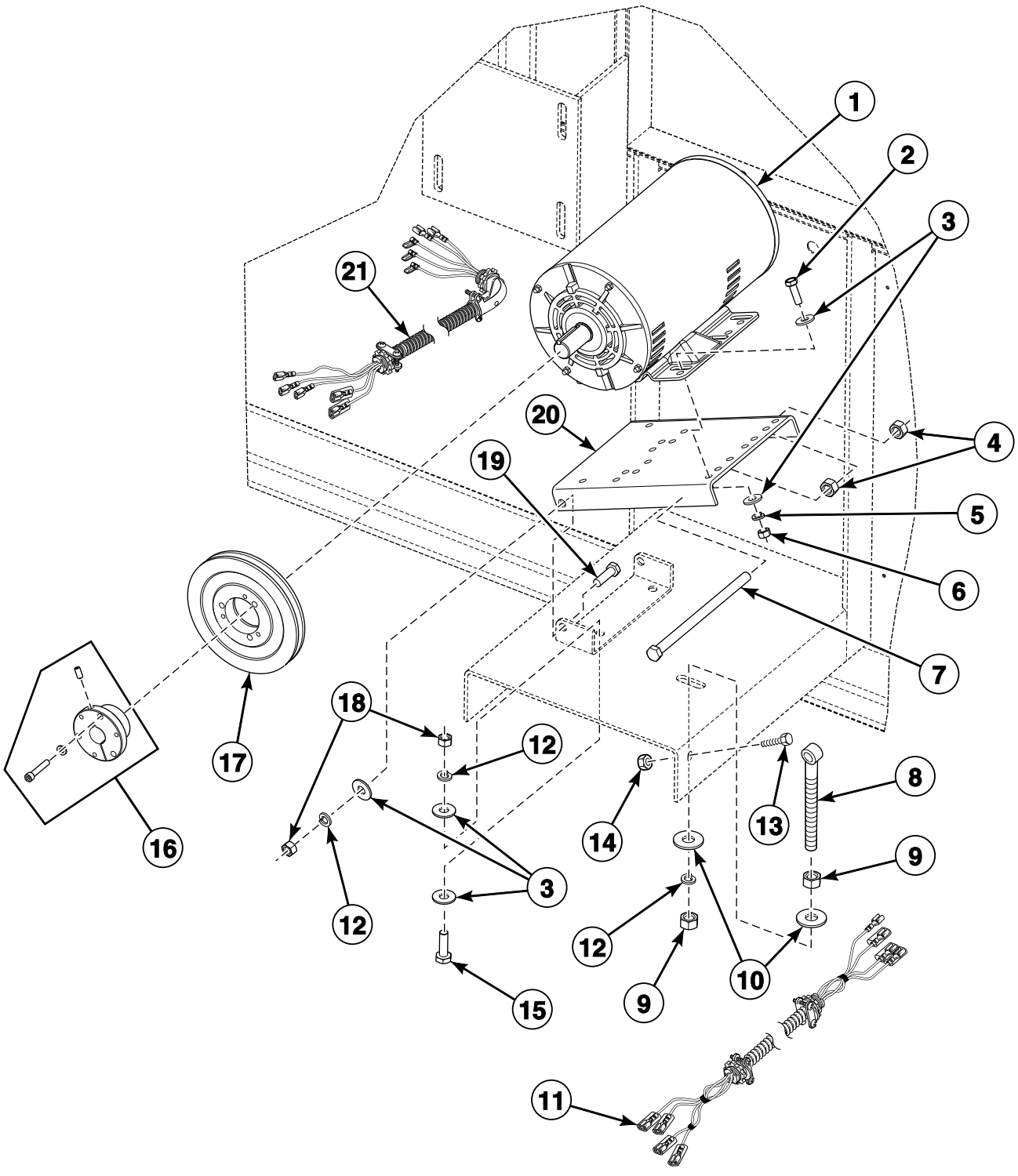

© Copyright, Alliance Laundry Systems LLC – DO NOT COPY or TRANSMIT

Fan Motor Assembly - 170 Pound Models

REF	PART NO.	DESCRIPTION	COMMENTS
1	44313501P	Fan Motor	3 hp; 200-208, 240 Volt/60 Hertz/3 Phase; 460-480 Volt/60 Hertz/3 Phase; Key included; No capacitor
	44046601P	Motor	3 hp; 380, 400-415 Volt/50 Hertz/3 Phase; Key included; No capacitor
2	M400056	Screw	4 required
3	M400080	Washer	
4	H88412093	Nut	2 required; Models through 9/7/08
	H88412101	Nut	2 required; Models starting 9/8/08
5	M400013	Washer	4 required
6	70142	Nut	4 required
7	M413528	Screw	Models through 9/7/08
	44161501	Screw	Models starting 9/8/08
8	44048501	Rod End	
9	H88412101	Nut	2 required
10	70261401	Washer	2 required
11	44022701	Cabinet Limit Harness	Non-CE models
	M414261	Cabinet Limit Harness Assembly	CU, GU, HU, KU, LU, PU, SU, UU and XU models; RM and RQ control suffixes
	N/A	Limit Harness	HU, PU, SU, UU and XU models; RT control suffix
	44108101P	Cabinet Limit Harness	CA, CT, GA, GT, HA, HT, I, KA, KT, LA, LT, PA, PT, SA, ST, UA, UT, W, XT and YT models; RM and RQ control suffixes; Models starting 7/26/06
12	M400014	Washer	
13	H88010038	Screw	Belt motor to fan motor base
14	29786	Nut	Belt motor to fan motor base
15	22688	Screw	4 required
16	M412995P	Bushing	Includes 44079202 Screw, 03189 Washer and 44048902 Screw
17	H8752065H	Sheave	6.5 inch OD; 50 Hertz
	H8752060H	Sheave	6 inch OD; 60 Hertz
18	20274	Nut	4 required
19	H96428693	Base Bracket	
20	M413171	Motor Base	
21	N/A	Fan Motor Harness Assembly	BU, GU, HU, KU, LU, PU, SU, UU and XU models

N/A = Part no longer available

© Copyright, Alliance Laundry Systems LLC – DO NOT COPY or TRANSMIT

Airflow Switch Assembly

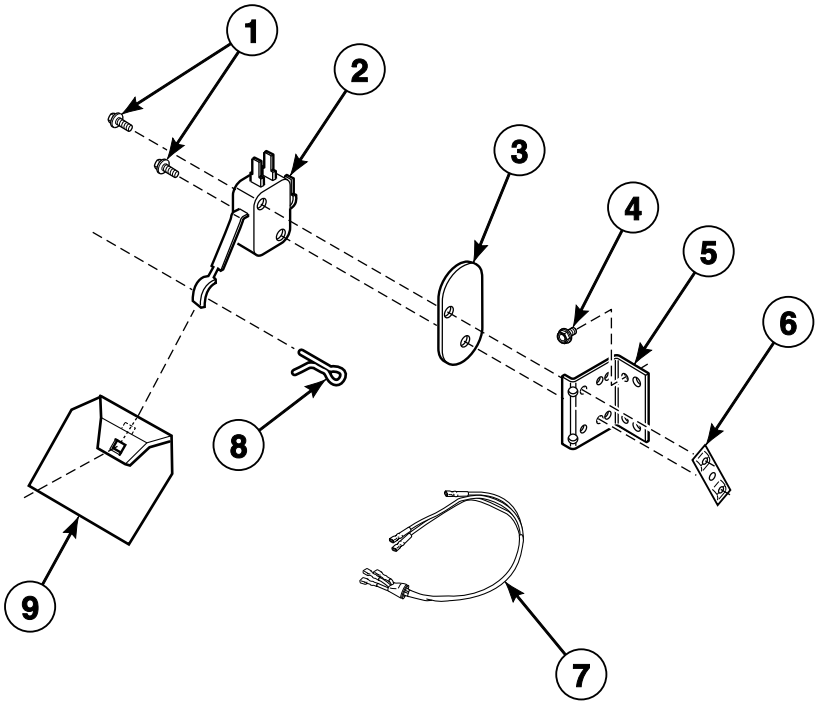

TMB2194P_70399801

© Copyright, Alliance Laundry Systems LLC – DO NOT COPY or TRANSMIT

Airflow Switch Assembly

REF	PART NO.	DESCRIPTION	COMMENTS
1	M401938	Screw	
2	44021701	Lever Arm Switch	
3	H96418728	Mounting Insulation	
4	430497	Screw	
5	430370	Airflow Switch Bracket	
6	M400979	Nut	
7	M413042P	Airflow Switch Harness Assembly	Non-CE models
	N/A	Airflow Switch Harness Assembly	CE models
8	02470	Cotter Pin	
9	70502301	Airflow Switch Vane	

N/A = Part no longer available

© Copyright, Alliance Laundry Systems LLC – DO NOT COPY or TRANSMIT

Gas Heater Components - 120 Pound Models

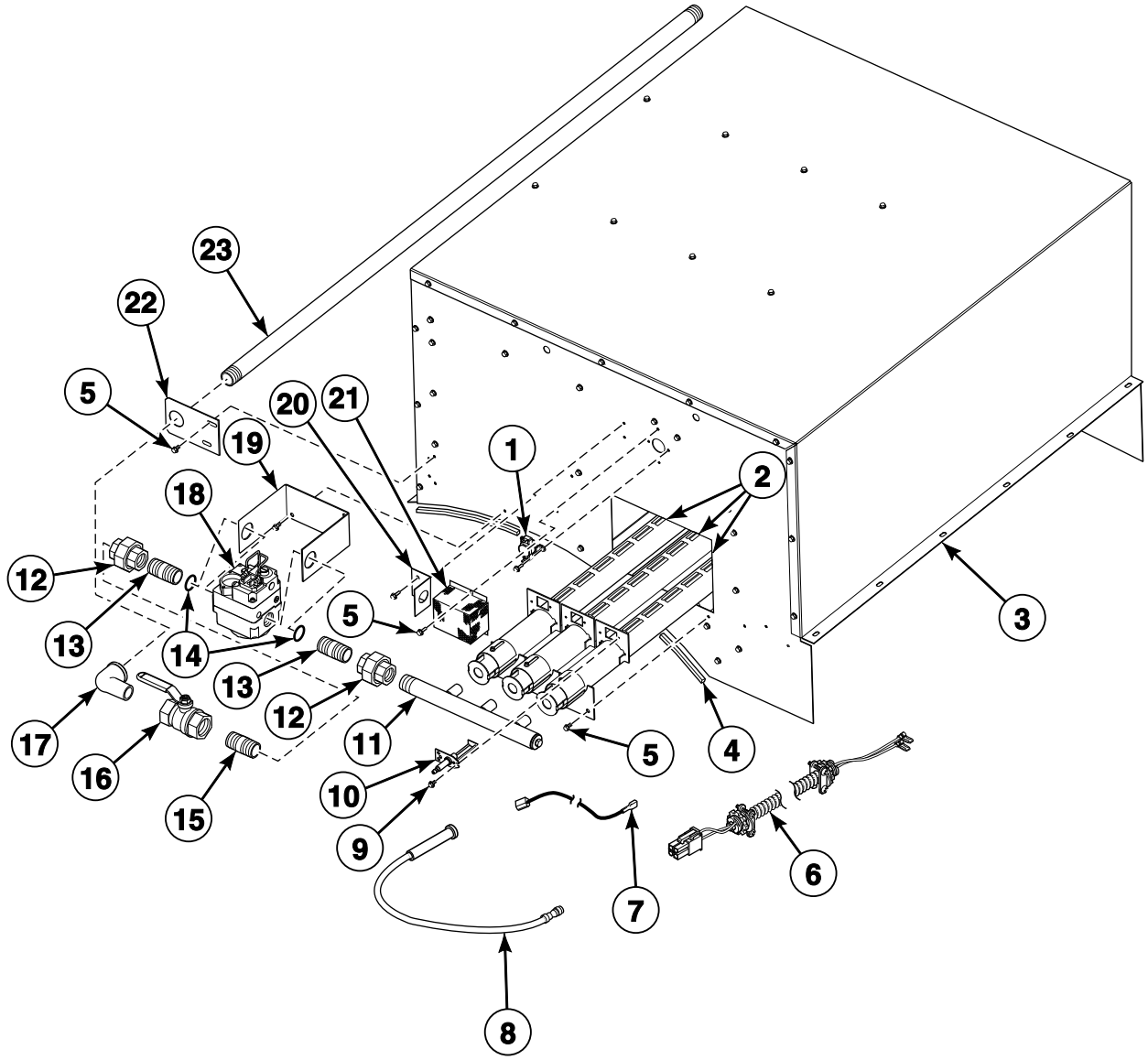

TMB2588P_70399801

© Copyright, Alliance Laundry Systems LLC – DO NOT COPY or TRANSMIT

Gas Heater Components - 120 Pound Models

REF	PART NO.	DESCRIPTION	COMMENTS
	M4577P3	Conversion Kit	Natural Gas (N.G.) to Liquid Petroleum Gas (L.P.); Non-CE models; 50 and 60 Hertz models through 10/9/08 and 60 Hertz models starting 10/10/08
	M4973P3	L.P. Gas Conversion Kit	N.G. to L.P.; Non-CE models; 50 Hertz models starting 10/10/08
	44333501	Stove Partition Gasket	Order 3.5 feet
1	M411404	Stove Limit Thermostat	Non-CE and non-Australian models
	M413988	Thermostat	Australian and CE models; Resetable
2	M412025P	Burner	Australian models order 2, in addition to 1 of M414243 Burner; All other models order 3
	M414243	Burner	Australian models order 1, in addition to 2 of M412025 Burner
3	M411097	Stove Assembly	Use M411592 Insulation inside top right
4	M411505	Stove Gasket	Order 3 feet
5	430497	Screw	18 required
6	M413104P	Stove Limit Harness Assembly	
7	M411061	ICM Return Lead	Australian models; Use with M410904P Instant Electronic Ignition Control
8	44061602P	High Temperature Ignition Lead	Non-Australian models; Use with 70367301P or 70367401P Ignition Control
	44061605P	High Temperature Ignition Lead	Australian models; Use with M410904P Instant Electronic Ignition Control
	44239703	High Voltage Suppression Cable	Use with 70458601P or 70483201P Ignition Control
9	51782	Screw	2 required
10	44328701P	Spark Electrode	Non-Australian models
	M410905P	Spark Igniter	Australian models
11	44390001	Spud Holder Weldment	
12	M411419	Pipe Union	2 required
13	M411417	Pipe Nipple	2 required
14	M412158	Gas Valve Flange Gasket	CE models; 50 Hertz
15	M411418	Pipe Nipple	
16	M413016	Ball Valve	
17	M411264	Street Elbow	
18	M4904P3	Valve Replacement Kit	N.G. and L.P.; 50 Hertz; CE models
	M413470P	Gas Valve	N.G.; 60 Hertz; Non-CE and non-Australian models
	M4883P3	Gas Valve Kit	L.P.; 60 Hertz; Non-CE and non-Australian models
	44166701	Gas Valve	N.G.; Non-CE models; 50 Hertz models starting 10/10/08
	44166702	Gas Valve	L.P.; Non-CE models; 50 Hertz models starting 10/10/08
	M4951P3	Gas Valve Kit	N.G. 50 Hertz models through 10/10/08
	M4952P3	Gas Valve Kit	L.P. 50 Hertz models through 10/10/08
	44042901P	Gas Valve Coil	Main coil for M413470P Gas Valve
19	M411259	Gas Valve Bracket	Non-CE models
	M413019	Gas Valve Bracket	CE models
20	431078	Stove Limit Harness Bracket	
21	M414477	Thermostat Cover	
22	M411498	Pipe Bracket	2 required
23	M411265	Gas Pipe	

© Copyright, Alliance Laundry Systems LLC – DO NOT COPY or TRANSMIT

Gas Heater Components - Non-CE 170 Pound Models

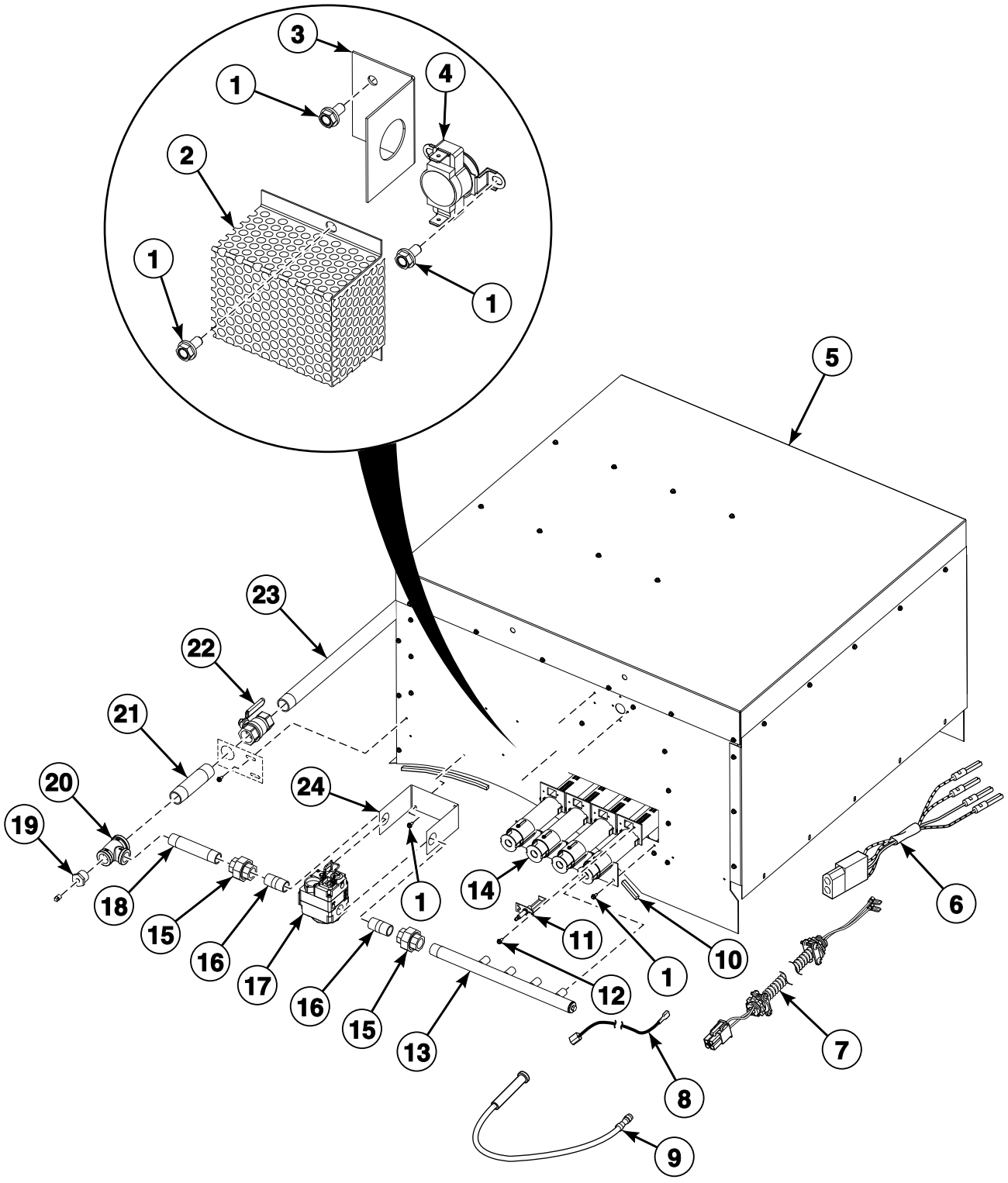

TMB2589P_70399801

© Copyright, Alliance Laundry Systems LLC – DO NOT COPY or TRANSMIT

Gas Heater Components - Non-CE 170 Pound Models

REF	PART NO.	DESCRIPTION	COMMENTS
	M4592P3	L.P. Conversion Kit	Natural Gas (N.G.) to Liquid Petroleum Gas (L.P.); 50 and 60 Hertz models through 10/9/08 and 60 Hertz models starting 10/10/08
	M4974P3	L.P. Gas Conversion Kit	N.G. to L.P.; 50 Hertz models starting 10/10/08
	44333501	Stove Partition Gasket	Order 3.5 feet
1	430497	Screw	20 required
2	M414477	Thermostat Cover	
3	431078	Stove Limit Harness Bracket	
4	M411404	Stove Limit Thermostat	220 closed; N.G.; Non-Australian models
	431177	Stove Limit Thermostat	340 closed; L.P.; Non-Australian models
	M413988	Thermostat	220 closed; Manual reset; N.G.; Australian models
	M413989	Manual Reset Thermostat	340 closed; L.P.; Australian models
5	M412016P	Stove Assembly	Sheet metal only
6	44166901	Gas Valve Harness	
7	M413041	Stove Limit Harness Assembly	
8	M411061	ICM Return Lead	Australian models
9	44061602P	High Temperature Ignition Lead	Non-Australian models
	44061605P	High Temperature Ignition Lead	Australian models
10	M411505	Stove Gasket	
11	44328701P	Spark Electrode	
12	51782	Screw	2 required
13	44390002	Spud Holder Weldment	
14	M412025P	Burner	4 required
15	M411419	Pipe Union	
16	M411417	Pipe Nipple	
17	M413470P	Gas Valve	N.G.; 60 Hertz; Non-Australian models
	M4883P3	Gas Valve Kit	L.P.; 60 Hertz; Non-Australian models
	44166701	Gas Valve	N.G. 50 Hertz models starting 10/10/08
	44166702	Gas Valve	L.P. 50 Hertz models starting 10/10/08
	M4951P3	Gas Valve Kit	N.G. 50 Hertz models through 10/10/08
	M4952P3	Gas Valve Kit	L.P. 50 Hertz models through 10/10/08
18	H85101673	Nipple	
19	M413021	Bushing	
20	N/A	Reducing Tee	
21	M413023	Pipe Nipple	Gas inlet
22	M413017	Ball Valve	
23	N/A	Gas Inlet Pipe	
24	M411259	Gas Valve Bracket	

N/A = Part no longer available

© Copyright, Alliance Laundry Systems LLC – DO NOT COPY or TRANSMIT

Gas Heater Components - CE 170 Pound Models (Drawing 1 of 2)

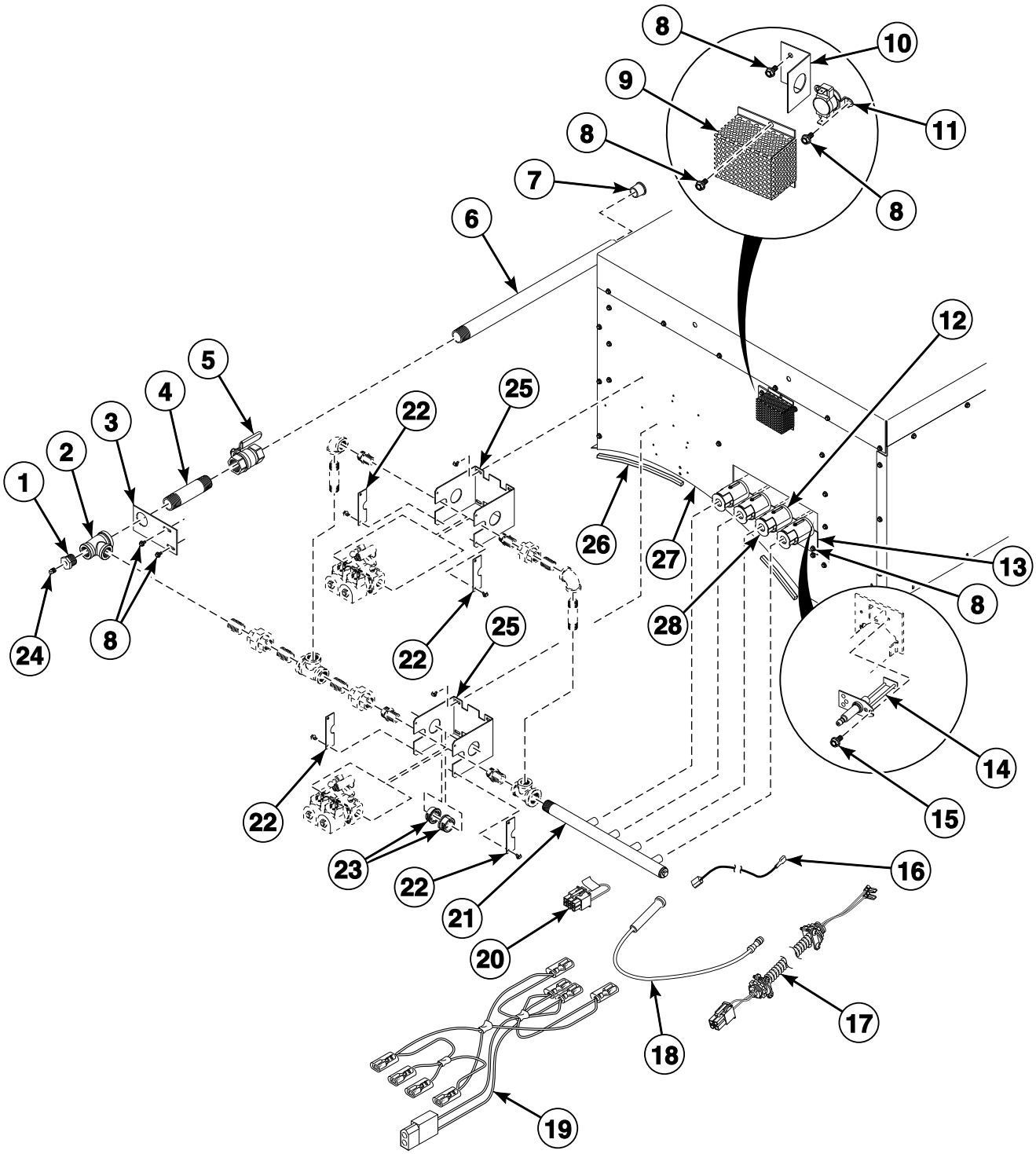

© Copyright, Alliance Laundry Systems LLC – DO NOT COPY or TRANSMIT

Gas Heater Components - CE 170 Pound Models (Drawing 1 of 2)

REF	PART NO.	DESCRIPTION	COMMENTS
	M414296	Heater Assembly	Natural Gas (N.G.); Includes items 1-28
	M414297	Heater Assembly	Liquid Petroleum Gas (L.P.); Includes items 1-28
1	M413021	Bushing	
2	N/A	Reducing Tee	
3	M412954	Pipe Bracket	2 required
4	M413023	Pipe Nipple	
5	M413017	Ball Valve	
6	N/A	Gas Inlet Pipe	
7	44087801	Pipe Cap	
8	430497	Screw	34 required
9	M414477	Thermostat Cover	
10	431078	Stove Limit Harness Bracket	
11	M413989	Manual Reset Thermostat	
12	N/A	Burner Shutter	3 required
13	M413099	Burner Opening Cover	
14	44328701P	Spark Electrode	
15	51782	Screw	2 required
16	M411061	ICM Return Lead	
17	M413041	Stove Limit Harness Assembly	
18	44061602P	High Temperature Ignition Lead	
19	44117801	Gas Valve Harness	
20	44115301	Stove Limit Bypass Jumper	
21	44390002	Spud Holder Weldment	
22	44117901	Pipe Keeper Bracket	4 required
23	M402542	Snap Bushing	2 required
24	N/A	Pipe Plug	
25	44117501	Gas Valve Bracket	2 required
26	M411505	Stove Gasket	2.66 feet required
	44333501	Stove Partition Gasket	3.5 feet required
27	M412016P	Stove Assembly	
28	M412025P	Burner	3 required

N/A = Part no longer available

© Copyright, Alliance Laundry Systems LLC – DO NOT COPY or TRANSMIT

Gas Heater Components - CE 170 Pound Models (Drawing 2 of 2)

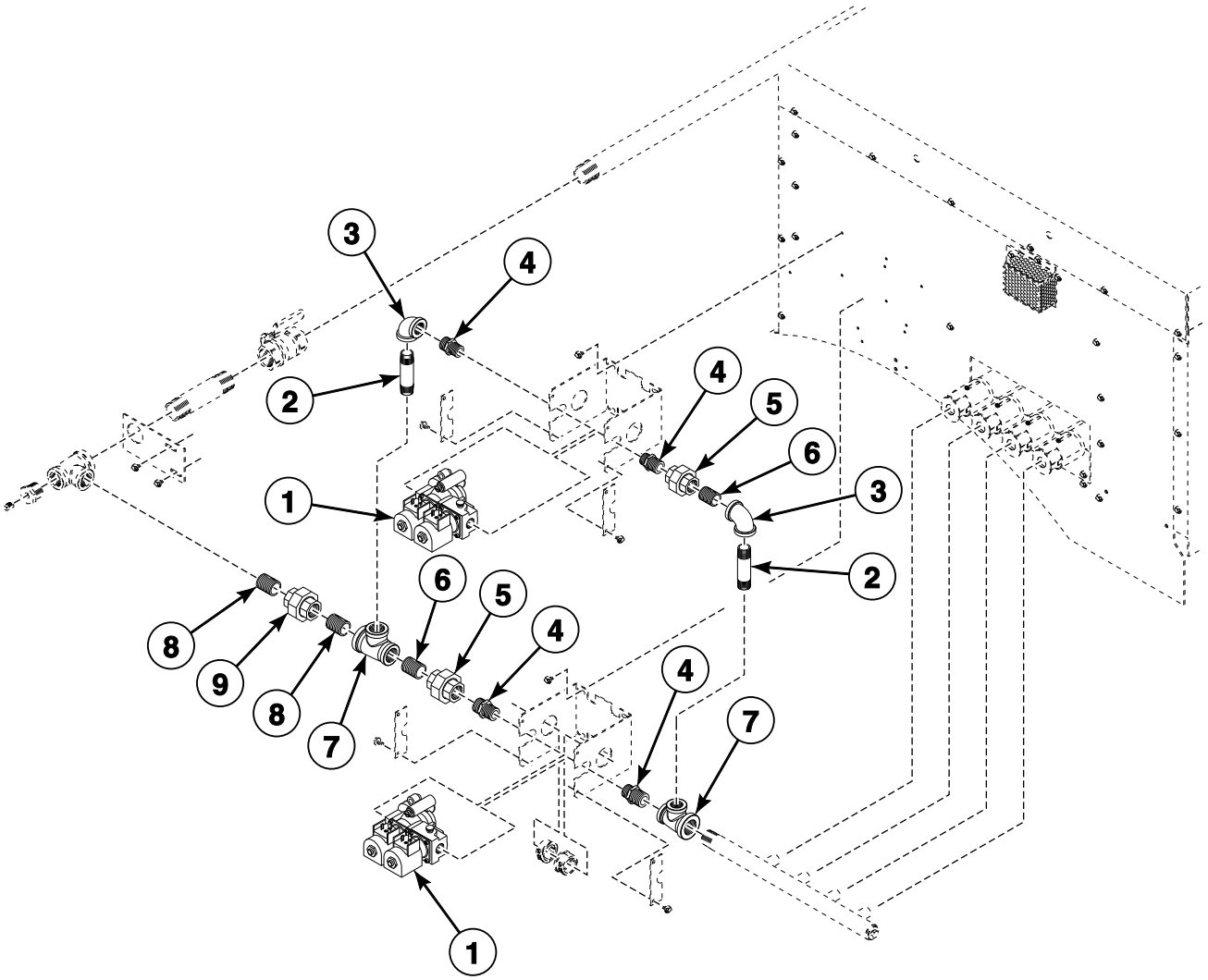

TMB2381P_70399801

© Copyright, Alliance Laundry Systems LLC – DO NOT COPY or TRANSMIT

Gas Heater Components - CE 170 Pound Models (Drawing 2 of 2)

REF	PART NO.	DESCRIPTION	COMMENTS
	M4900P3	N.G. Kit	Use to repair gas valve
	M4901P3	L.P. Kit	Use to repair gas valve
	60517	Valve Converted Label	Goes on gas valve after valve has been converted from one type of gas to another
1	M413332P	Gas Valve	Natural Gas (N.G.); 2 required
	M4909P3	Valve Replacement Kit	Liquid Petroleum Gas (L.P.); 2 required
2	901403	Pipe Nipple	2 required
3	70079601	Elbow	2 required
4	70131901	Adapter	4 required
5	H86000031	Union	2 required
6	431486	Pipe Nipple	2 required
7	44117401	Reducing Tee	2 required
8	N/A	Nipple	2 required
9	M411419	Pipe Union	2 required

N/A = Part no longer available

© Copyright, Alliance Laundry Systems LLC – DO NOT COPY or TRANSMIT

Burner Orifices

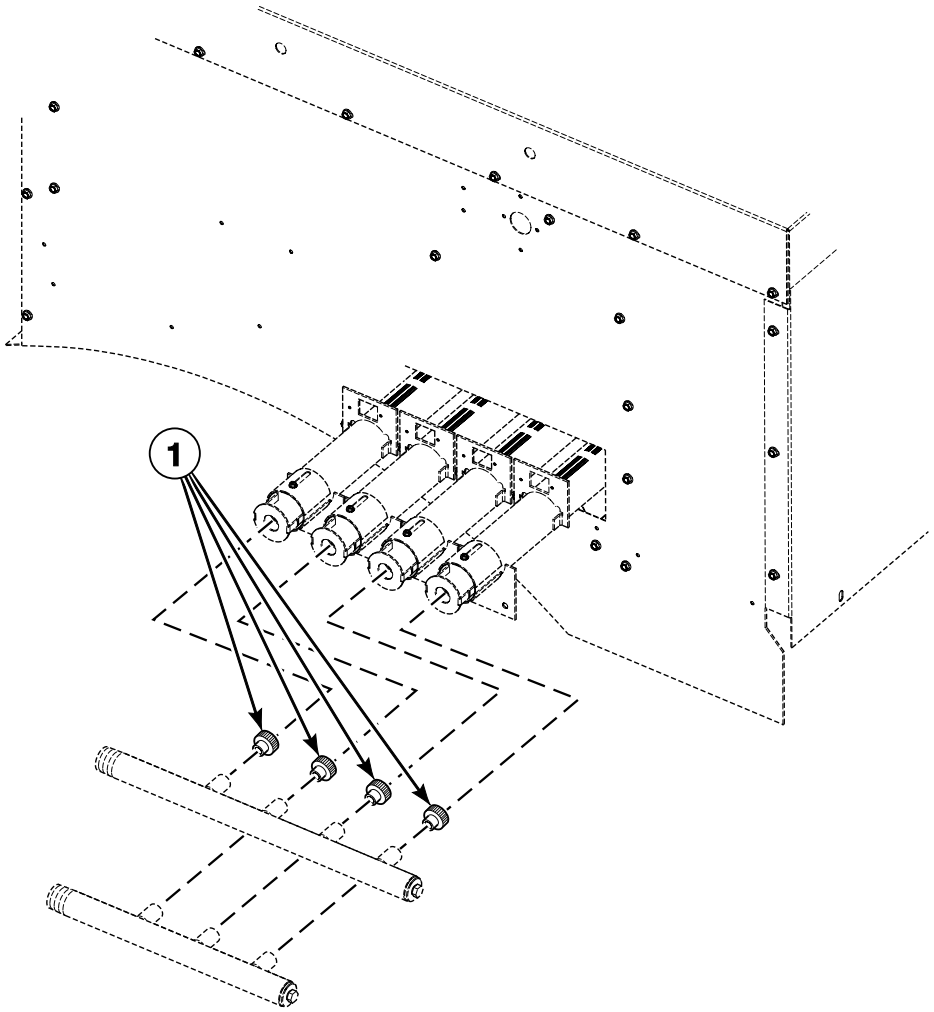

TMB2528P_70399801

© Copyright, Alliance Laundry Systems LLC – DO NOT COPY or TRANSMIT

Burner Orifices

REF	PART NO.	DESCRIPTION	COMMENTS
1	70684151	Burner Orifice	Natural Gas (N.G.); 0-2,000 feet; Drill no. 12 (4.8 mm); 3 required for 120 pound models; 4 required for 170 pound models
	70684149	Burner Orifice	N.G.; 2,001-4,000 feet; Drill no. 14 (4.6 mm); 3 required for 120 pound models; 4 required for 170 pound models
	70684147	Burner Orifice	N.G.; 4,001-6,000 feet; Drill no. 16 (4.5 mm); 3 required for 120 pound models; 4 required for 170 pound models
	70684146	Burner Orifice	N.G.; 6,001-8,000 feet; Drill no. 17 (4.4 mm); 3 required for 120 pound models; 4 required for 170 pound models
	70684143	Burner Orifice	N.G.; 8,001-10,000 feet; Drill no. 19 (4.2 mm); 3 required for 120 pound models; 4 required for 170 pound models
	70684124	Burner Orifice	Liquid Petroleum Gas (L.P.); 0-2,000 feet; Drill no. 33 (2.9 mm); 120 pound models; 3 required
	70684122	Burner Orifice	L.P.; 2,001-4,000 feet; Drill no. 35 (2.8 mm); 120 pound models; 3 required
	70684120	Burner Orifice	L.P.; 4,001-6,000 feet; Drill no. 36 (2.7 mm); 120 pound models; 3 required
	70684118	Burner Orifice	L.P.; 6,001-8,000 feet; Drill no. 38 (2.6 mm); 120 pound models; 3 required
	70684116	Burner Orifice	L.P.; 8,001-10,000 feet; Drill no. 40 (2.5 mm); 120 pound models; 3 required
	70684132	Burner Orifice	L.P.; 0-2,000 feet; Drill no. 29 (3.4 mm); 170 pound models; 4 required
	70684129	Burner Orifice	L.P.; 2,001-6,000 feet; Drill no. 30 (3.3 mm); 170 pound models; 4 required
	70684126	Burner Orifice	L.P.; 6,001-10,000 feet; Drill no. 31 (3.0 mm); 170 pound models; 4 required

© Copyright, Alliance Laundry Systems LLC – DO NOT COPY or TRANSMIT

Steam Heater Components - 120 Pound Models Through Serial No. 0412012320 Except B, C, I and L Models

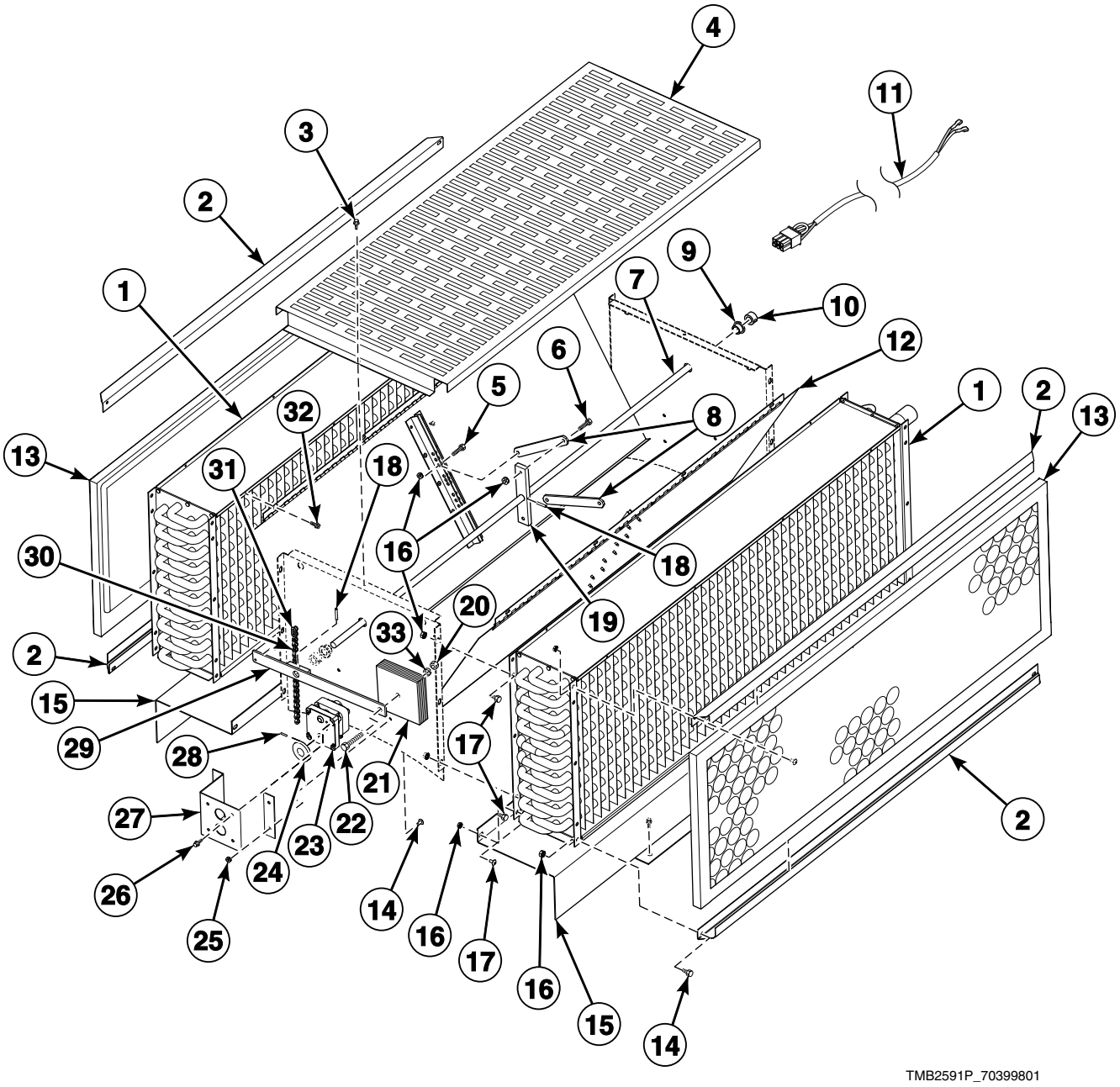

© Copyright, Alliance Laundry Systems LLC – DO NOT COPY or TRANSMIT

Steam Heater Components - 120 Pound Models Through Serial No. 0412012320 Except B, C, I and L Models

REF	PART NO.	DESCRIPTION	COMMENTS
	M414458	Steam Heater Assembly	60 Hertz; Includes items 1-33
	M414482	Steam Heater Assembly	50 Hertz; Includes items 1-33
1	H96382023P	Steam Coil	2 required
2	H96388087	Filter Channel	4 required
3	M405188	Screw	2 required
4	44018401	Steam Cover	
5	N/A	Screw	2 required
6	20253	Screw	2 required
7	H96388079	Damper Shaft	
8	N/A	Damper Link	2 required
9	M414459	Bushing	2 required
10	M414451	Shaft Collar	2 required
11	M413086	Damper Motor Harness Assembly	
12	H96387519	Damper	2 required
13	44172201	Filter	2 required; CE models
	H96382106	Steam Coil Filter	2 required; All other models
14	808210	Screw	2 required per filter channel; 4 required per hamper motor bracket
15	M411550	Steam Coil Support	2 required
16	29786	Nut	
17	70321501	Screw	
18	H88970256	Roll Pin	2 required
19	N/A	Damper Actuator	
20	70142	Nut	
21	M413331	Damper Counterweight	6 required
22	H88010574	Screw	
23	M412905P	Damper Motor	50 Hertz
	M413592P	Damper Motor	60 Hertz
24	H96388178	Drive Wheel	Damper
25	23951	Nut	2 required per filter channel; 4 required per damper motor bracket
26	61199	Screw	4 required
27	H96388145	Motor Bracket	
28	H88900683	Spring Pin	Damper
29	H96387501	Actuator Arm Assembly	Counterweight
30	H96388186	Drive Chain	
31	H96382072P	Master Link	2 required
32	D501086	Screw	8 required
33	M400013	Washer	

N/A = Part no longer available

© Copyright, Alliance Laundry Systems LLC – DO NOT COPY or TRANSMIT

Steam Heater Components - 120 Pound Models Starting Serial No. 0412012321 Except B, C, and I Models

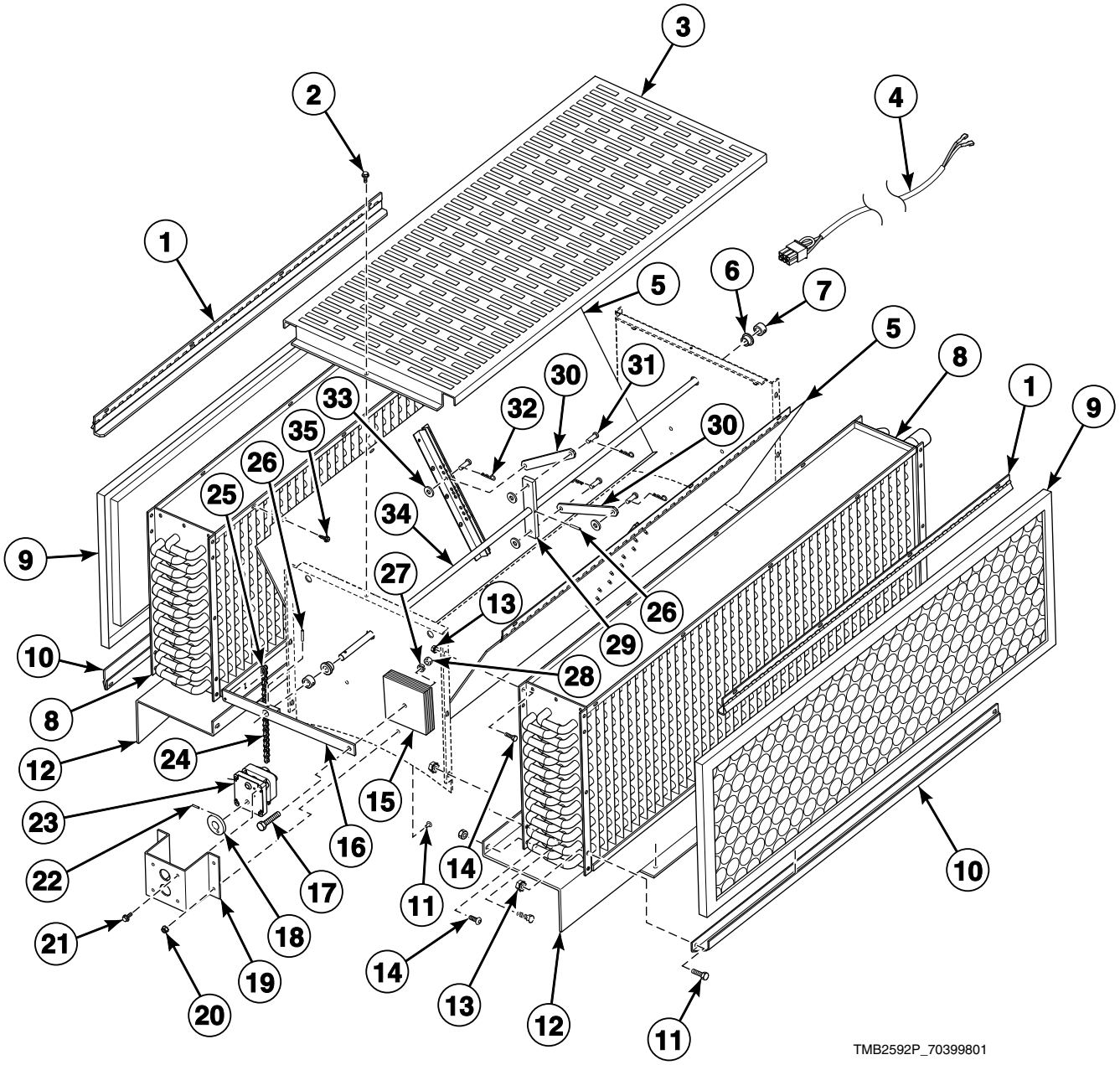

© Copyright, Alliance Laundry Systems LLC – DO NOT COPY or TRANSMIT

Steam Heater Components - 120 Pound Models Starting Serial No. 0412012321 Except B, C, and I Models

REF	PART NO.	DESCRIPTION	COMMENTS
	M414458	Steam Heater Assembly	60 Hertz; Includes items 1-35
	M414482	Steam Heater Assembly	50 Hertz; Includes items 1-35
	M414534	Damper Bracket	Thermal oil models; 4 required
1	44088101	Steam Filter Top Hinge Assembly	2 required
2	M405188	Screw	
3	44115101	Steam Cover	
4	M413086	Damper Motor Harness Assembly	
5	H96387519	Damper	2 required; Use M405750 Pop Rivet
6	M414459	Bushing	2 required
7	M414451	Shaft Collar	2 required
8	H96382023P	Steam Coil	All models except thermal oil models; 2 required; 902303 Steam Pressure Label by inlet connection
9	44172201	Filter	2 required; CE models
	H96382106	Steam Coil Filter	2 required; All other models
10	H96388087	Filter Channel	2 required; Upper
11	808210	Screw	2 required
12	M411550	Steam Coil Support	3 required
13	29786	Nut	3 required
14	70321501	Screw	3 required
15	M413331	Damper Counterweight	6 required
16	H96387501	Actuator Arm Assembly	
17	H88010574	Screw	
18	H96388178	Drive Wheel	Damper
19	H96388145	Motor Bracket	
20	23951	Nut	3 required
21	61199	Screw	
22	H88900683	Spring Pin	Damper
23	M413592P	Damper Motor	
24	H96388186	Drive Chain	
25	H96382072P	Master Link	2 required
26	H88970256	Roll Pin	2 required
27	M400013	Washer	
28	70142	Nut	
29	44096401	Steam Damper Actuator	
30	N/A	Damper Link	2 required
31	44091501	Clevis Pin	4 required
32	44091601	Hairpin Cotter	4 required
33	800465	Washer	4 required
34	H96388079	Damper Shaft	
35	D501086	Screw	

N/A = Part no longer available

© Copyright, Alliance Laundry Systems LLC – DO NOT COPY or TRANSMIT

Steam Heater Components - 120 Pound B, C and I Models

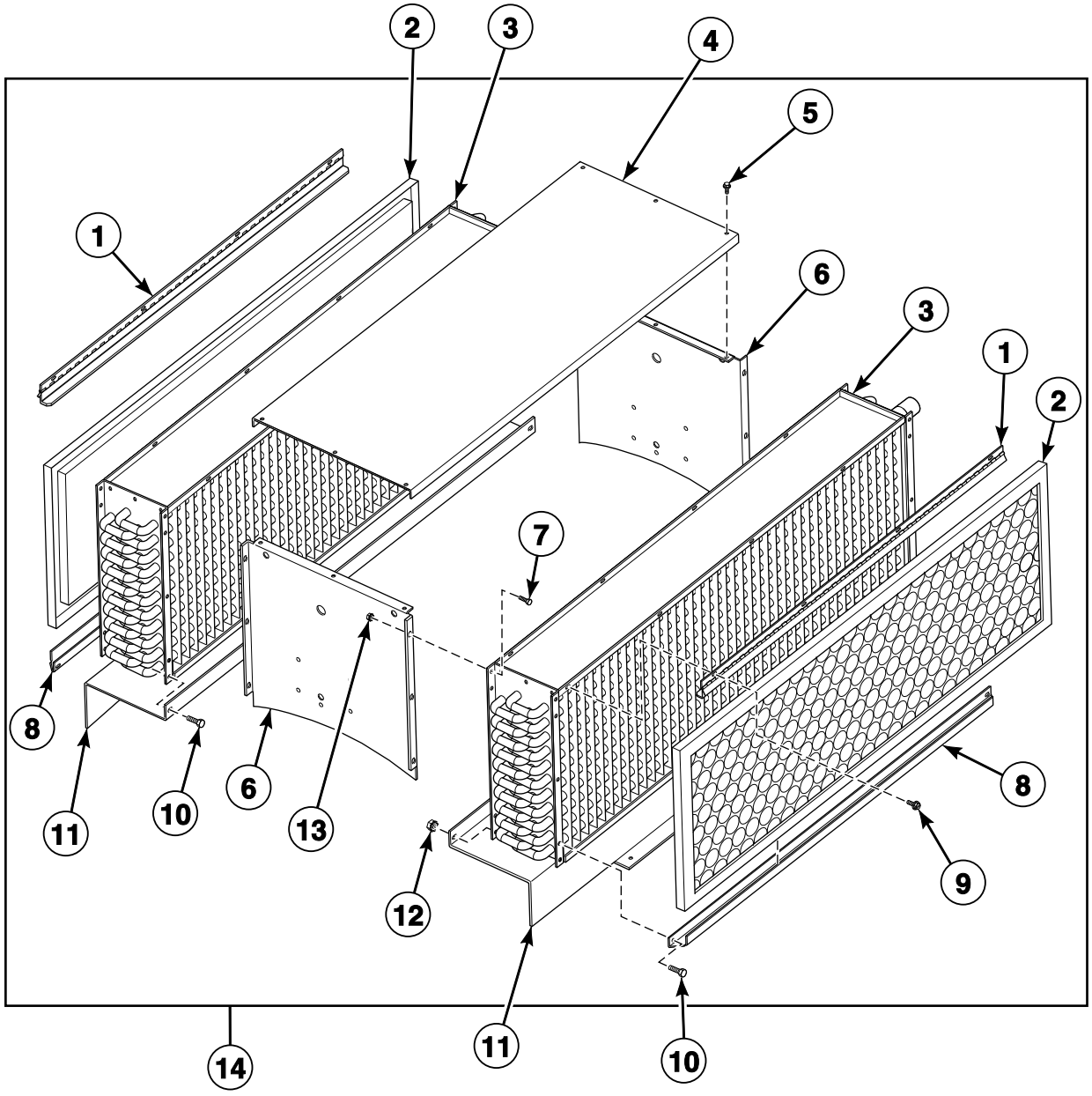

TMB2394P_70399801

© Copyright, Alliance Laundry Systems LLC – DO NOT COPY or TRANSMIT

Steam Heater Components - 120 Pound B, C and I Models

REF	PART NO.	DESCRIPTION	COMMENTS
	M414534	Damper Bracket	Thermal oil models; 4 required
1	44088101	Steam Filter Top Hinge Assembly	2 required
2	44172201	Filter	2 required; CE models
	H96382106	Steam Coil Filter	2 required; All other models
3	H96382023P	Steam Coil	All models except thermal oil models; 2 required; 902303 Steam Pressure Label by inlet connection
4	44114501	Steam Cover	
5	430497	Screw	6 required
6	44114901	Steam Coil Housing End	2 required
7	70321501	Screw	16 required
8	H96388087	Filter Channel	2 required; Upper
9	D501086	Screw	8 required
10	808210	Screw	4 required
11	M411550	Steam Coil Support	2 required
12	23951	Nut	4 required
13	29786	Nut	16 required
14	44114701P	Steam Heater Assembly	Includes items 1-13

© Copyright, Alliance Laundry Systems LLC – DO NOT COPY or TRANSMIT

Steam Heater Components - 170 Pound Models Through Serial No. 0412012320 Except B, C, I and L Models

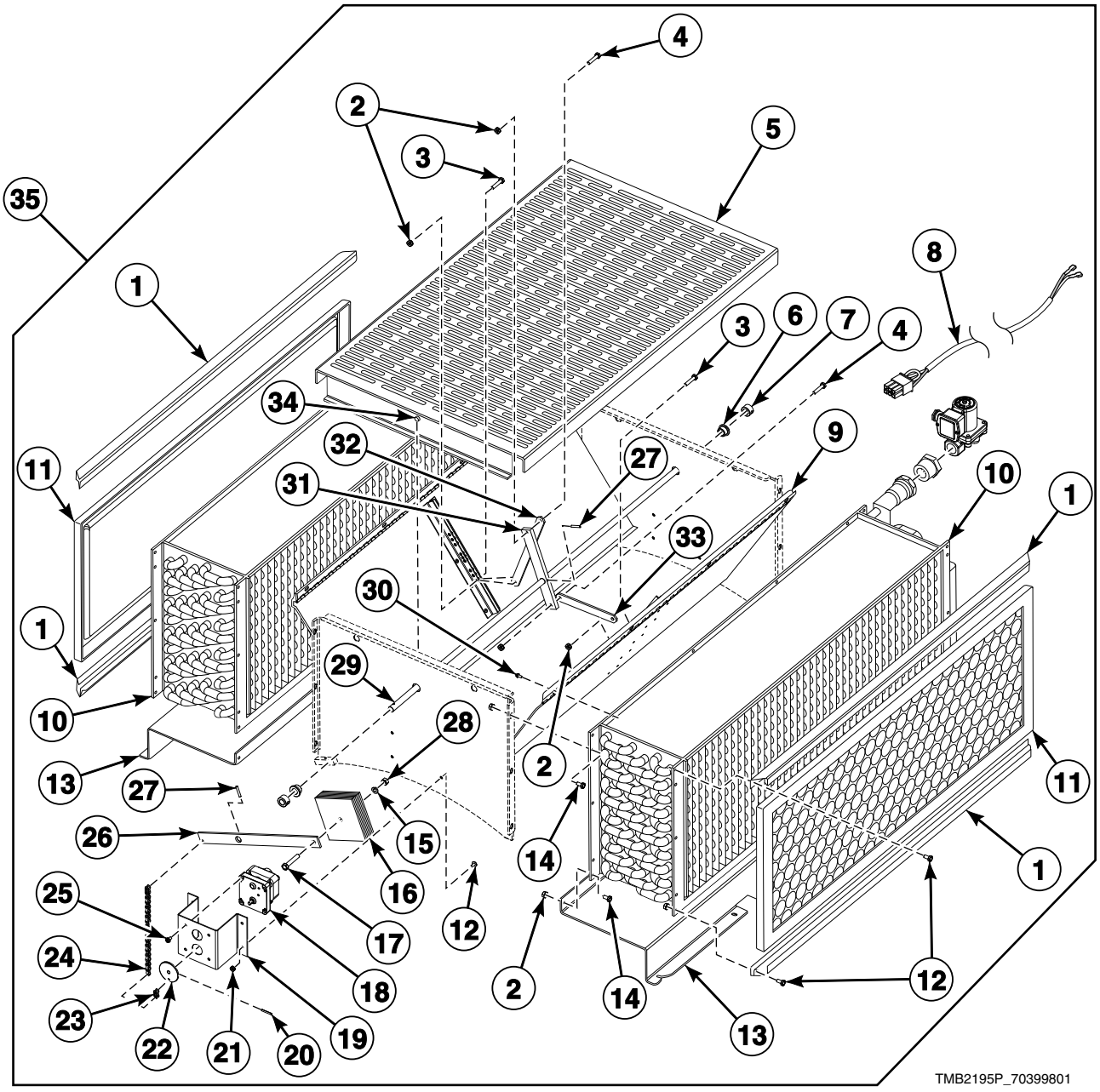

© Copyright, Alliance Laundry Systems LLC – DO NOT COPY or TRANSMIT

Steam Heater Components - 170 Pound Models Through Serial No. 0412012320 Except B, C, I and L Models

REF	PART NO.	DESCRIPTION	COMMENTS
1	44045101	Filter Channel	2 required
	44088101	Steam Filter Top Hinge Assembly	
2	29786	Nut	18 required
3	N/A	Screw	2 required
4	20253	Screw	2 required
5	44018501	Steam Coil Housing Cover	
6	M414459	Bushing	2 required
7	M414451	Shaft Collar	2 required
8	M413086	Damper Motor Harness Assembly	
9	H96367685	Damper Assembly	2 required
10	M409833P	Steam Coil	Left
	M409834P	Steam Coil	Right
11	44172101	Filter	2 required; CE models
	H96362264	Coil Filter	2 required; All other models
12	808210	Screw	2 required per filter channel; 4 required per damper motor bracket
13	M412201	Steam Coil Support	2 required
14	70321501	Screw	14 required
15	M400013	Washer	
16	M413331	Damper Counterweight	7 required
17	H88010574	Screw	
18	M412905P	Damper Motor	50 Hertz
	M413592P	Damper Motor	60 Hertz
19	H96388145	Motor Bracket	
20	H88900683	Spring Pin	Damper motor wheel
21	23951	Nut	2 required per filter channel; 4 required per damper motor bracket
22	H96388178	Drive Wheel	Damper
23	H96382072P	Master Link	2 required
24	H96388186	Drive Chain	
25	61199	Screw	4 required
26	H96387501	Actuator Arm Assembly	
27	H88970256	Roll Pin	2 required
28	70142	Nut	
29	N/A	Damper Shaft	
30	D501086	Screw	8 required
31	N/A	Actuator	
32	N/A	Damper Link	Left; 8.12
33	N/A	Damper Link	Right; 5.56
34	M405188	Screw	2 required
35	M414490P	Steam Heater Assembly	60 Hertz; Includes items 1-34
	M414485	Steam Heater Assembly	50 Hertz; Includes items 1-34

N/A = Part no longer available

© Copyright, Alliance Laundry Systems LLC – DO NOT COPY or TRANSMIT

Steam Heater Components - 170 Pound Models
Starting Serial No. 0412012321 Except B, C and I Models

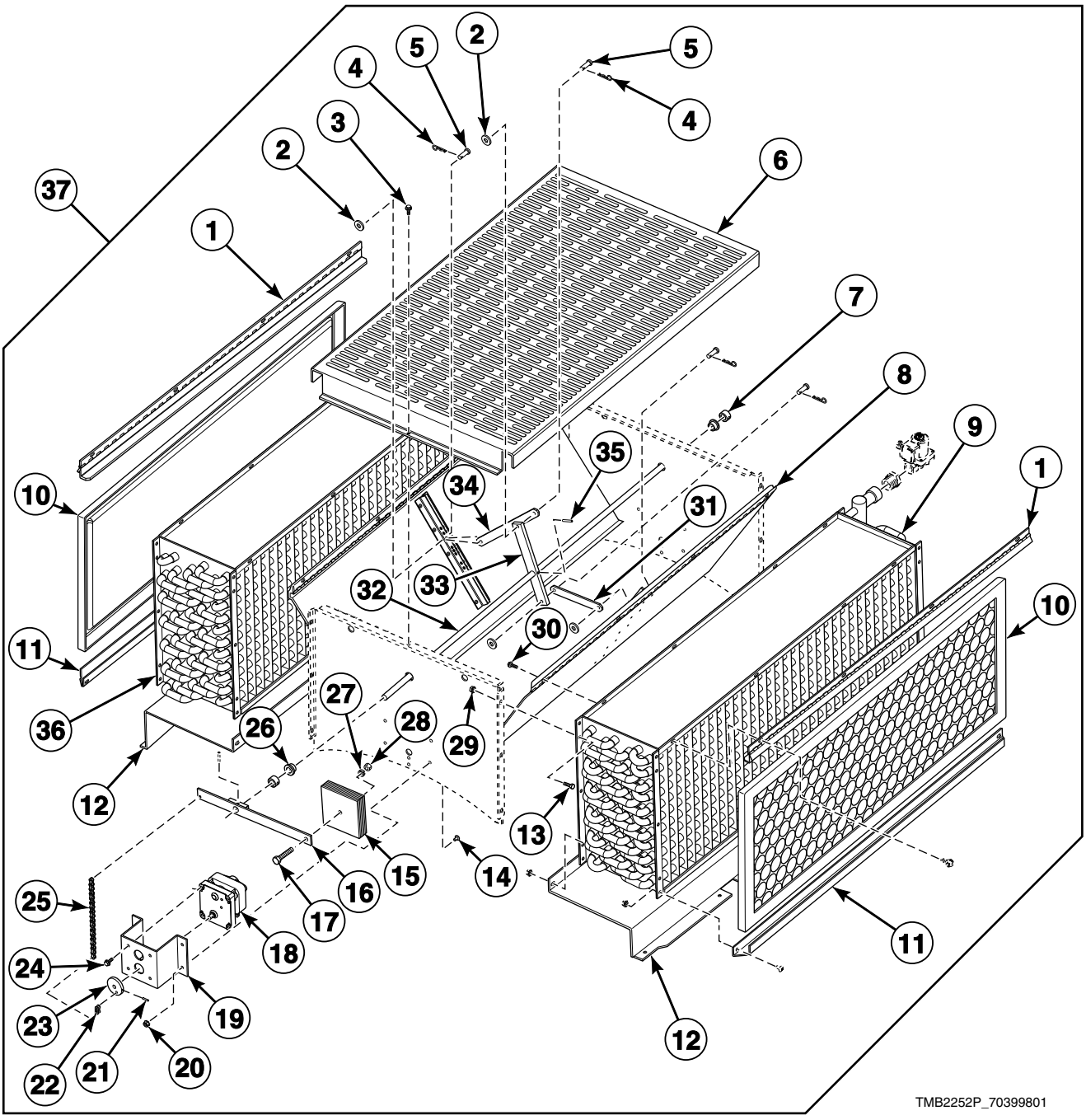

© Copyright, Alliance Laundry Systems LLC – DO NOT COPY or TRANSMIT

Steam Heater Components - 170 Pound Models
Starting Serial No. 0412012321 Except B, C and I Models

REF	PART NO.	DESCRIPTION	COMMENTS
	M414801	Damper Bracket	Thermal oil models; 4 required
1	44088101	Steam Filter Top Hinge Assembly	2 required
2	800465	Washer	4 required
3	M405188	Screw	2 required
4	44091601	Hairpin Cotter	4 required
5	44091501	Clevis Pin	4 required
6	44018501	Steam Coil Housing Cover	
	44115201	Steam Cover	
7	M414451	Shaft Collar	2 required
8	H96367685	Damper Assembly	2 required
9	M409834P	Steam Coil	All models except thermal oil models; Right; 902303 Steam Pressure Label by inlet connection
10	44172101	Filter	2 required; CE models
	H96362264	Coil Filter	2 required; All other models
11	44045101	Filter Channel	2 required
	44088101	Steam Filter Top Hinge Assembly	
12	M412201	Steam Coil Support	2 required
13	70321501	Screw	14 required
14	808210	Screw	8 required
15	M413331	Damper Counterweight	7 required
16	H96387501	Actuator Arm Assembly	
17	H88010574	Screw	
18	M413592P	Damper Motor	
19	H96388145	Motor Bracket	
20	23951	Nut	12 required
21	H88900683	Spring Pin	
22	H96382072P	Master Link	2 required
23	H96388178	Drive Wheel	
24	61199	Screw	4 required
25	H96388186	Drive Chain	
26	M414459	Bushing	2 required
27	M400013	Washer	
28	70142	Nut	
29	29786	Nut	14 required
30	D501086	Screw	16 required
31	N/A	Damper Link	Right
32	N/A	Damper Shaft	
33	44096501	Steam Damper Actuator	
34	N/A	Damper Link	
35	H88970256	Roll Pin	2 required
36	M409833P	Steam Coil	All models except thermal oil models; Left; 902303 Steam Pressure Label by inlet connection
37	M414490P	Steam Heater Assembly	60 Hertz; Includes items 1-36
	M414485	Steam Heater Assembly	50 Hertz; Includes items 1-36

N/A = Part no longer available

© Copyright, Alliance Laundry Systems LLC – DO NOT COPY or TRANSMIT

Steam Heater Components - 170 Pound B, C and I Models

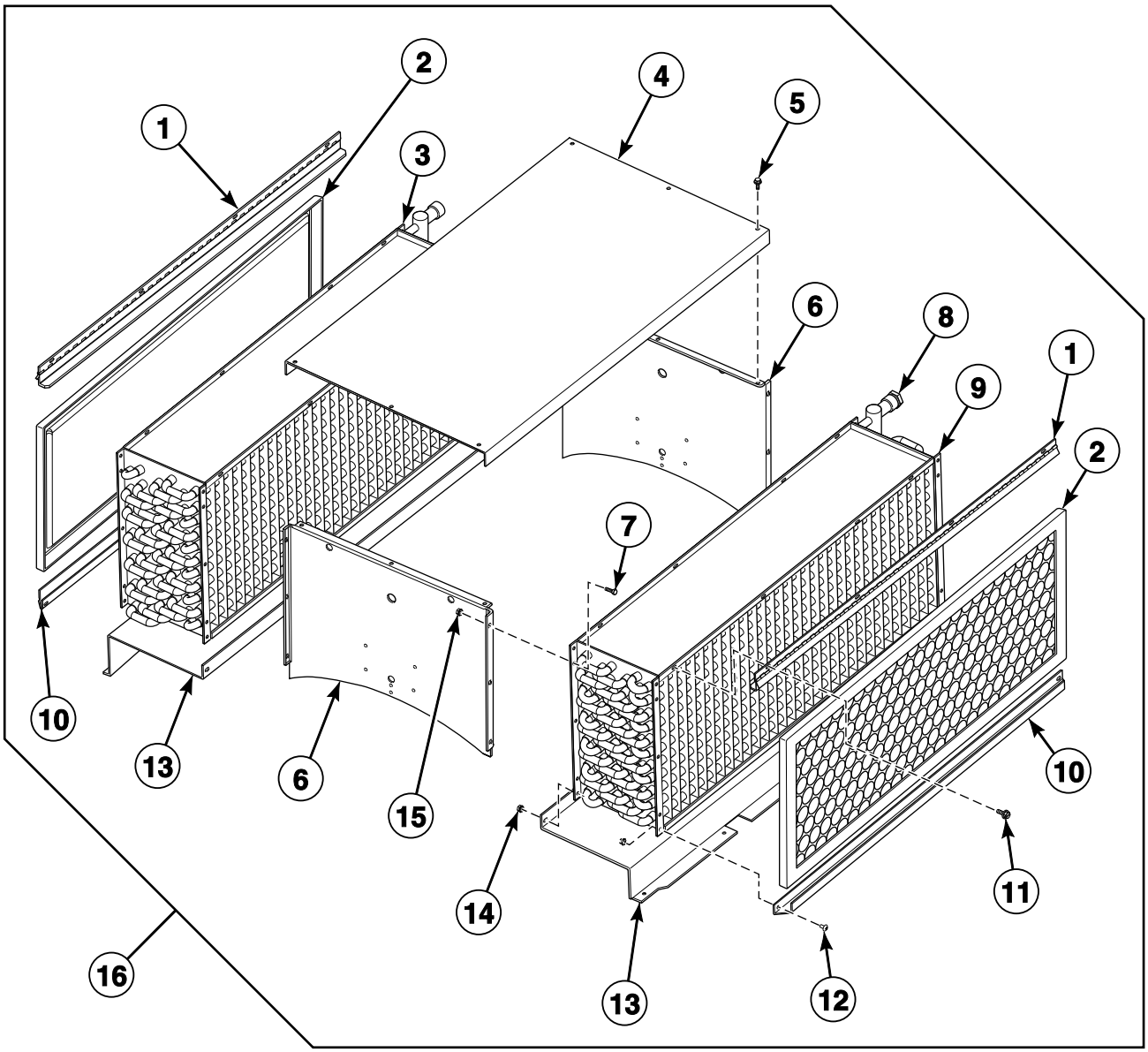

TMB2395P_70399801

© Copyright, Alliance Laundry Systems LLC – DO NOT COPY or TRANSMIT

Steam Heater Components - 170 Pound B, C and I Models

REF	PART NO.	DESCRIPTION	COMMENTS
	M414801	Damper Bracket	Thermal oil models; 4 required
1	44088101	Steam Filter Top Hinge Assembly	2 required
2	44172101	Filter	2 required; CE models
	H96362264	Coil Filter	2 required; All other models
3	M409833P	Steam Coil	All models except thermal oil models; Left; 902303 Steam Pressure Label by inlet connection
4	44114601	Steam Cover	
5	430497	Screw	6 required
6	44115001	Steam Coil Housing End	2 required
7	70321501	Screw	16 required
8	M409844	Bushing	2 required
9	M409834P	Steam Coil	All models except thermal oil models; Right; 902303 Steam Pressure Label by inlet connection
10	44045101	Filter Channel	2 required
11	D501086	Screw	8 required
12	808210	Screw	4 required
13	M412201	Steam Coil Support	2 required
14	23951	Nut	4 required
15	29786	Nut	16 required
16	44114801	Steam Heater Assembly	Includes items 1-15

© Copyright, Alliance Laundry Systems LLC – DO NOT COPY or TRANSMIT

Steam Solenoid Valve

All Steam Models Except Thermal Oil Models

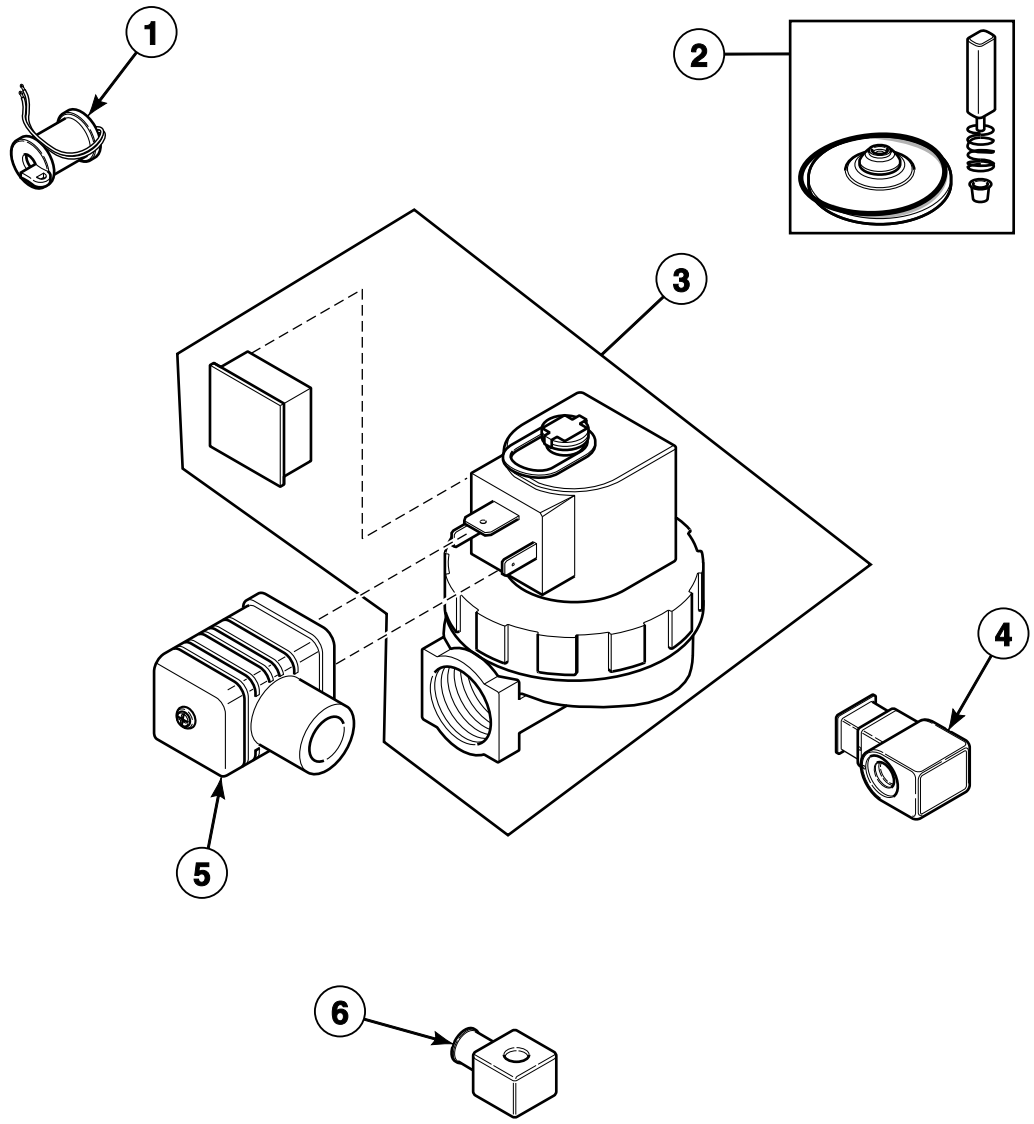

TMB2593P_70399801

© Copyright, Alliance Laundry Systems LLC – DO NOT COPY or TRANSMIT

Steam Solenoid Valve

REF	PART NO.	DESCRIPTION	COMMENTS
	F8379502	Valve Rebuild Kit	Use with F8322902 Steam Valve
	F8382301	DIN Valve Adapter Kit	Use with F8322902 Steam Valve
1	M412258	Steam Valve Coil	120 pound models; Used with 70351002P Steam Valve
	F8514801	Valve Coil	Use with F8322902 Steam Valve
2	M412259	Steam Valve Rebuild Kit	Models through 7/10/05
	70351021P	Steam Valve Rebuild Kit	Models starting 7/11/05
3	F8521701	Valve Kit	60 Hertz; Parker
	F8322902	Steam Valve	60 Hertz; Asco
	F8322903	Steam Valve	50 Hertz; Asco
4	70351012	Steam Solenoid	170 pound models; 50 Hertz; Used with 70351002P Steam Valve
5	70370301P	Solenoid Valve DIN Connector	
6	70351011P	Steam Solenoid	170 pound models; 60 Hertz; Used with 70351001P Steam Valve

© Copyright, Alliance Laundry Systems LLC – DO NOT COPY or TRANSMIT

Rotation Sensor - B, C and I Models

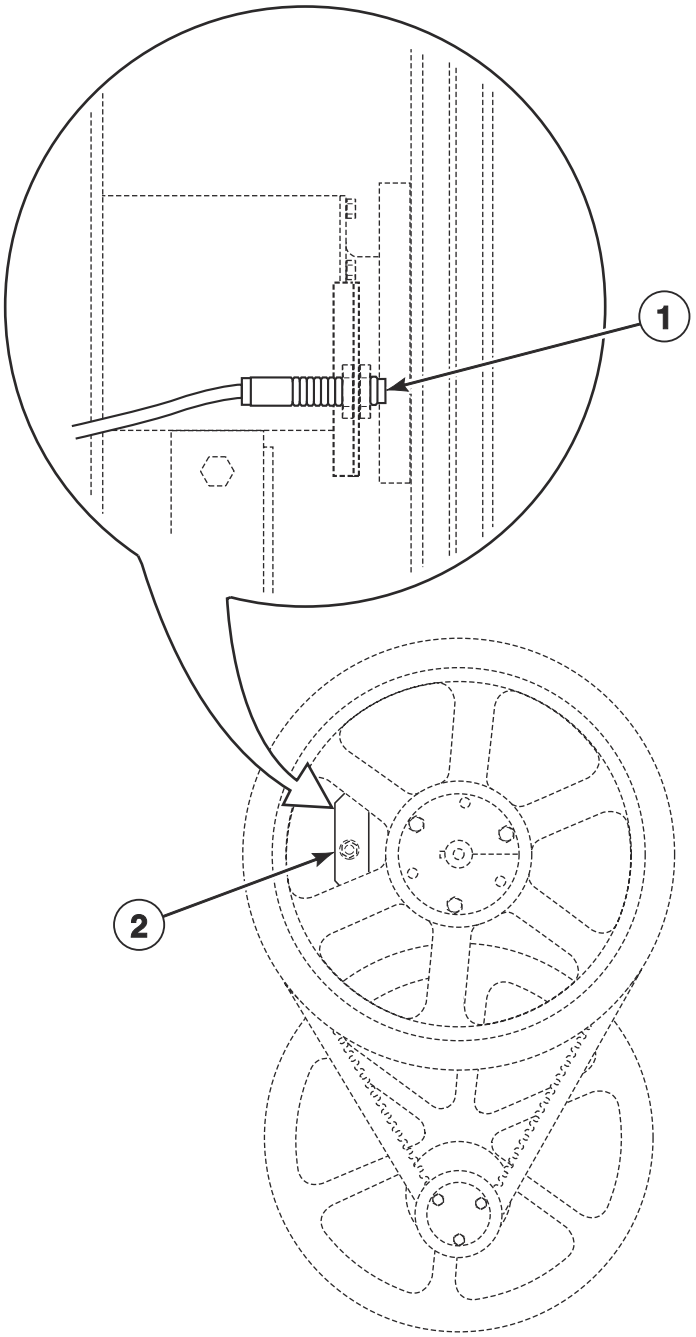

TMB2009P_70399801

© Copyright, Alliance Laundry Systems LLC – DO NOT COPY or TRANSMIT

Rotation Sensor - B, C and I Models

REF	PART NO.	DESCRIPTION	COMMENTS
1	7010P	Rotation Sensor Kit	Includes plug; B models through 10/21/07; C and I models
	70417401P	Rotation Sensor Assembly	Includes plug; B models; Models starting 10/22/07
2	44111101	Rotation Sensor Bracket	

© Copyright, Alliance Laundry Systems LLC – DO NOT COPY or TRANSMIT

Contactor Box Assembly (Drawing 1 of 2)

Non-CE Models
Models with R3, RD, RM, RQ, and RT Control Suffixes;
200 Volt/50 Hertz/3 Phase; 200-208/240 Volt/60 Hertz/3 Phase; 230-240 Volt/50 Hertz/3 Phase

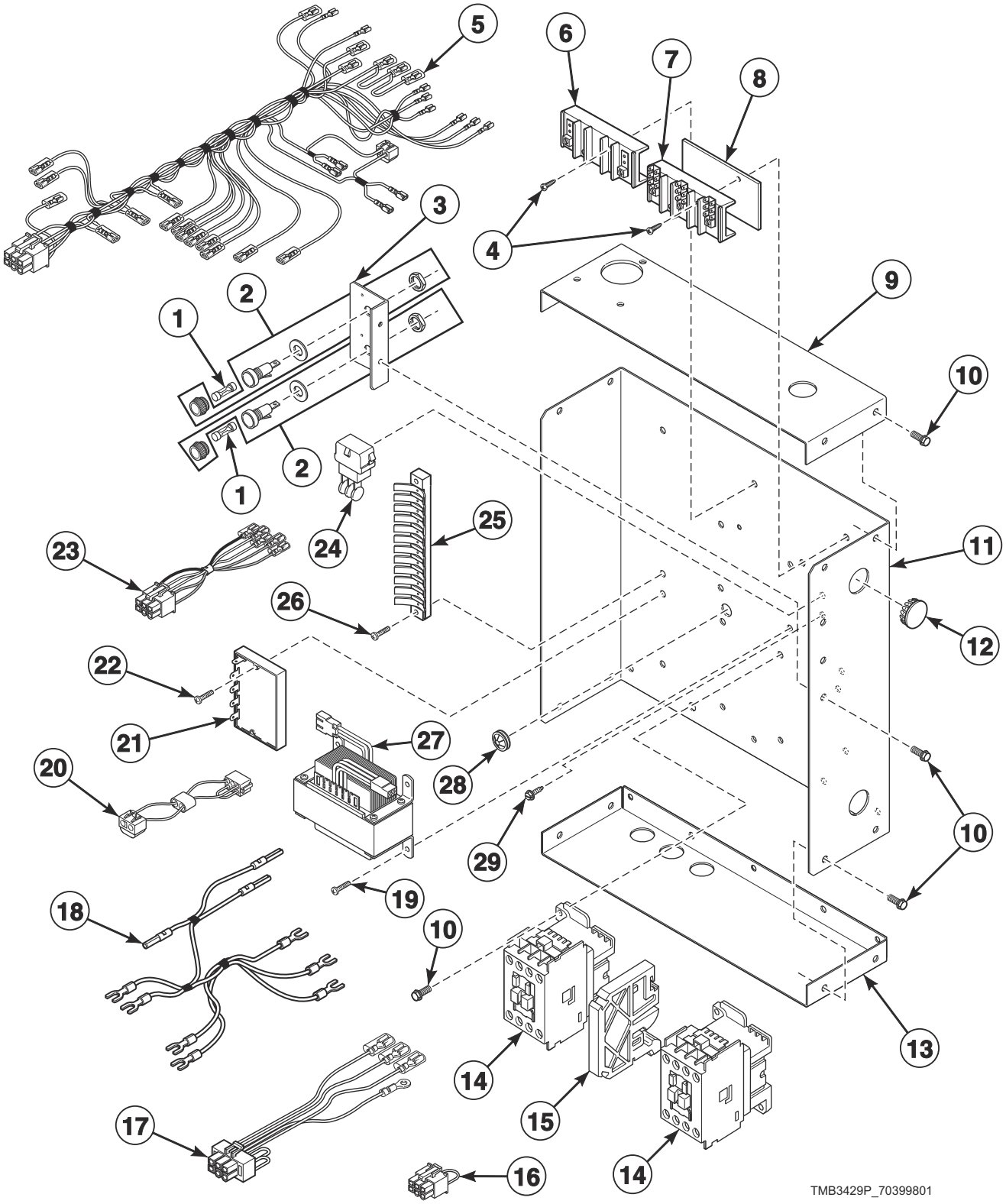

© Copyright, Alliance Laundry Systems LLC – DO NOT COPY or TRANSMIT

Contactor Box Assembly (Drawing 1 of 2)

REF	PART NO.	DESCRIPTION	COMMENTS
	M413760	Contactor Box Cover	
	44324001	Warning Label	Extended tumble; On contactor box cover
	M414276	Mount Bracket	Use to mount item 11 to machine
	M413614P	Fan Contactor	24 Volt; Through 4/14/09
	M413615P	Reversing Contactor	Forward and reverse with interlock; Through 4/14/09
1	M413118	Fuse	2 required; 250 Volt; 2 Amp
2	91024P	Fuse Receptacle	2 required; 250 Volt
3	M413575	Fuse Holder Bracket	
4	800930	Screw	6 required
5	M413684P	Contactor Box Harness Assembly	Reversing; 3 Phase
6	M405364	Terminal Block	2 pole
7	430642	Terminal Block	3 pole
8	M413862	Insulator	
9	M413757	Contactor Box End	Top
10	51780	Screw	21 required
11	44028401	Contactor Box Wrapper	
12	M400985	Plug	2 required; Snap in plug
13	M413758	Contactor Box End	Bottom
14	70323701P	Contactor	24 Volt; 3 required
15	F330186P	Interlock Contactor	Reversing
16	M413168	Bypass Harness Assembly	R3, RD, RM and RQ control suffixes
17	M413878	Network Capacitor Harness Assembly	R3, RD and RM control suffixes
18	M413624	Reversing Contactor Jumper Assembly	Upper; 3 Phase
19	M400044	Screw	4 required; Use with 4 of 23951 Nut to attach item 27
20	M413506	Jumper Harness Assembly	200-208 Volt
	M413507	Jumper Configuration Assembly	230-240 Volt
21	M412081	Reversing Timer	RT control suffix
22	N/A	Screw	2 required; RT control suffix
23	44008001	Reversing Timer Harness	RT control suffix
24	M413863	Network Capacitor Assembly	R3, RD and RM control suffixes
25	M413542	Terminal Strip	12 circuit
26	51778	Screw	2 required
27	M414228P	Transformer	Multitap
28	M411537	Bushing	
29	M402917	Screw	Ground

N/A = Part no longer available

© Copyright, Alliance Laundry Systems LLC – DO NOT COPY or TRANSMIT

Contactor Box Assembly (Drawing 2 of 2)

Non-CE Models
Models with R3, RD, RM, RQ and RT Control Suffixes;
380/400-415 Volt/50 Hertz/3 Phase; 440-480 Volt/60 Hertz/3 Phase

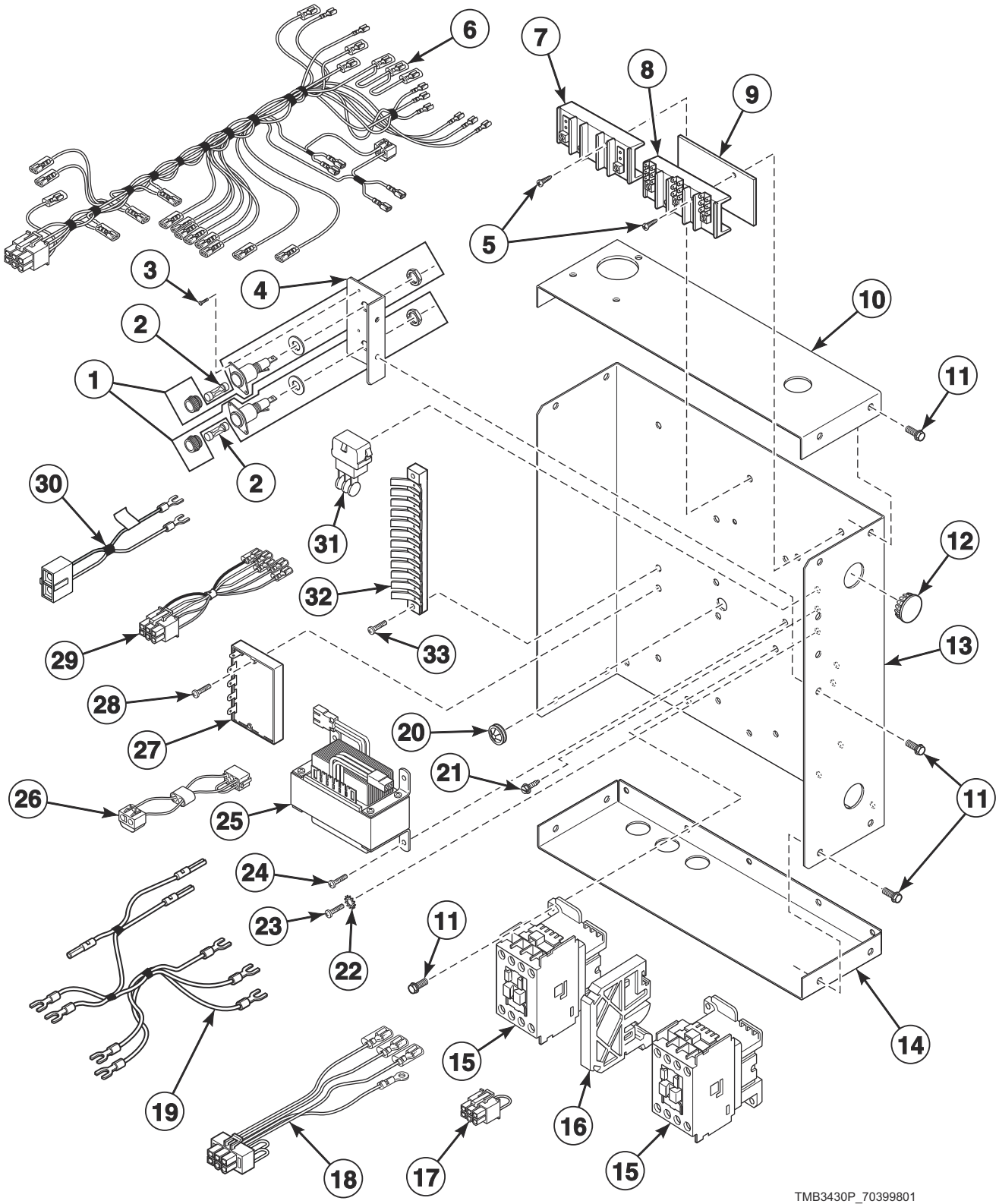

© Copyright, Alliance Laundry Systems LLC – DO NOT COPY or TRANSMIT

Contactor Box Assembly (Drawing 2 of 2)

REF	PART NO.	DESCRIPTION	COMMENTS
	M413760	Contactor Box Cover	
	44324001	Warning Label	Extended tumble; On contactor box cover
	M414276	Mount Bracket	Use to mount item 13 to machine
	M413614P	Fan Contactor	24 Volt
1	M413544P	Fuse Holder	2 required
2	44310001	Fuse	2 required; 0.5 Amp; 500 Volt
3	D501086	Screw	4 required
4	M413576	Fuse Holder Bracket	
5	800930	Screw	6 required
6	M413684P	Contactor Box Harness Assembly	Reversing; 3 Phase
7	M405364	Terminal Block	2 pole
8	430642	Terminal Block	3 pole
9	M413862	Insulator	
10	M413757	Contactor Box End	Top
11	51780	Screw	21 required
12	M400985	Plug	2 required
13	44028401	Contactor Box Wrapper	
14	M413758	Contactor Box End	Bottom
15	70323701P	Contactor	24 Volt; 3 required
16	F330186P	Interlock Contactor	Reversing
17	M413168	Bypass Harness Assembly	R3, RD, RM and RQ control suffixes
18	M413878	Network Capacitor Harness Assembly	R3, RD and RM control suffixes
19	M413624	Reversing Contactor Jumper Assembly	3 Phase; Upper
20	M411537	Bushing	
21	M402917	Screw	Ground
22	03815	Washer	2 required; Grounding
23	430497	Screw	R3, RD, RM and RQ control suffixes
24	M400044	Screw	4 required; Use with 4 of 23951 Nut to attach item 25
25	M414229P	Transformer	380, 400-415 and 460-480 Volt; Multitap
	44074401	Transformer	440 Volt; Dual; Secondary
26	M413508	Jumper Harness Assembly	380, 400-415 Volt/50 Hertz/3 Phase
	M413510	Jumper Configuration Assembly	460-480 Volt/60 Hertz/3 Phase
	M413509	Jumper Harness Assembly	415 Volt
27	M412081	Reversing Timer	24 Volt; RT control suffix
28	N/A	Screw	2 required; RT control suffix
29	44008001	Reversing Timer Harness	RT control suffix
30	44111401	Emergency Stop Harness	R3 control suffix
31	M413863	Network Capacitor Assembly	R3, RD and RM control suffixes
32	M413542	Terminal Strip	12 circuit
33	51778	Screw	2 required

N/A = Part no longer available

© Copyright, Alliance Laundry Systems LLC – DO NOT COPY or TRANSMIT

Junction Box Assembly

CE Models
Models with R3, RD, RM, RQ and RT Control Suffixes;
380, 400-415 Volt/50 Hertz/3 Phase

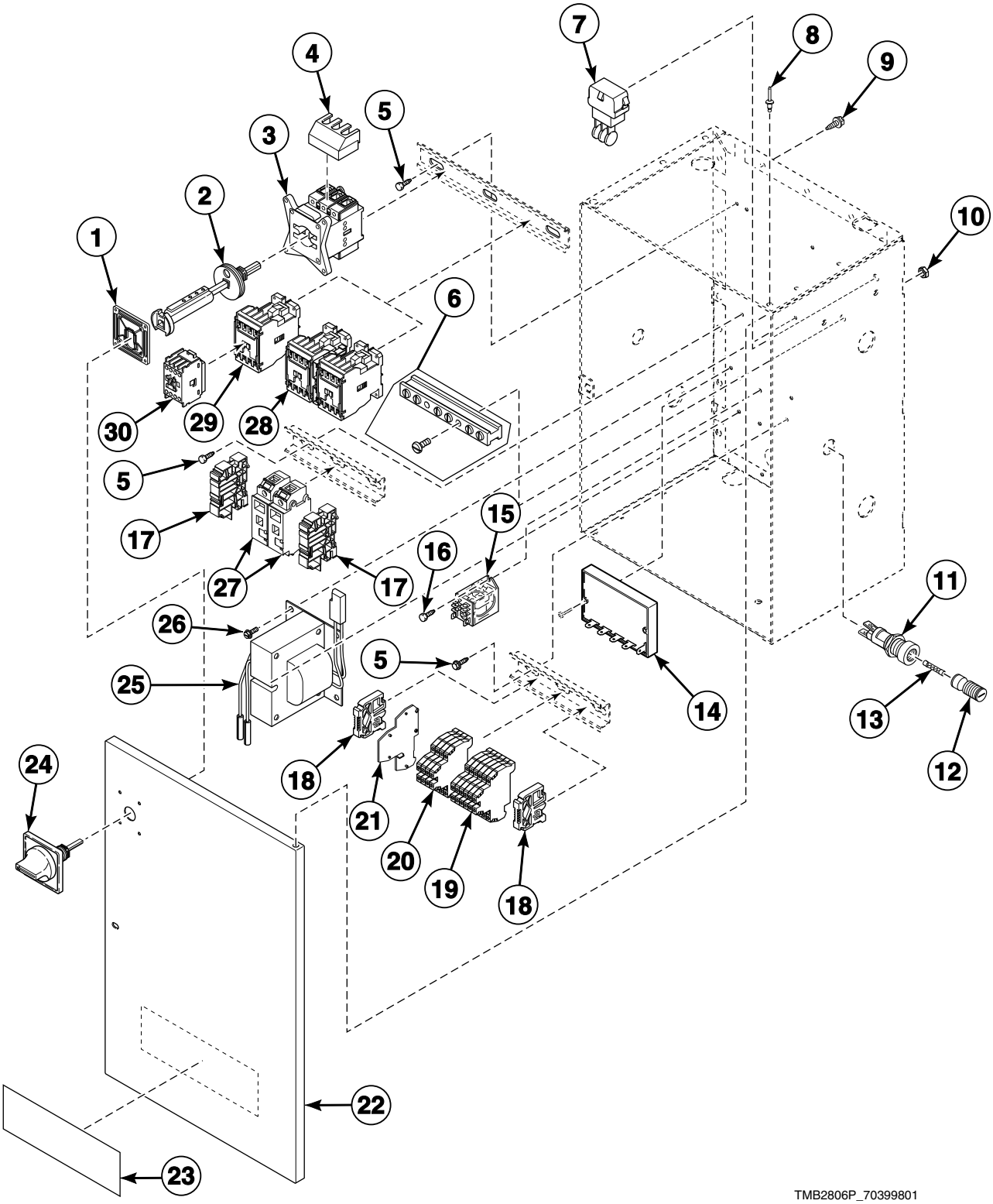

© Copyright, Alliance Laundry Systems LLC – DO NOT COPY or TRANSMIT

Junction Box Assembly

REF	PART NO.	DESCRIPTION	COMMENTS
1	M412368	Door Interlock	
2	M412370	Extension Handle	20 Amp
3	M412187P	Mounting Switch Base	20 Amp
4	M412366	Finger Guard	20 Amp
5	51780	Screw	6 required
6	M412656	Ground Buss Assembly	Includes 2 screws
7	M413863	Network Capacitor Assembly	R3, RD and RM control suffixes
8	M400713	Drive Rivet	2 required; To secure cover to junction box
9	430497	Screw	18 required; To secure junction box to backplane
10	M412688	Nut	2 required
11	D502591P	Fuse Holder Kit	Includes nut
12	D502811	Fuse Carrier	
13	D502592	Fuse	RT control suffix
	M413889	Fuse	R3, RD, RM and RQ control suffixes
14	M412081	Reversing Timer	RT control suffix; Use 2 of Q6516 Screw and 2 of 02788 Nut to attach
15	M412534	Relay	24 Volt; 2 required for RT control suffix
16	D501086	Screw	2 required for R3, RD and RM control suffixes; 3 required for RT control suffix
	M400071	Screw	2 required; RQ control suffix
17	M412615	End Stop	2 required; High voltage
18	70121001	End Stop	2 required
19	M412631	Terminal Block	6 required; Gray; 2 circuit
20	M412632	Terminal Block	4 required; Blue; 1 circuit
21	M412633	End Barrier	
22	M412650	Junction Box Cover	
23	44324001	Warning Label	Extended tumble; On contactor box cover
24	M412208	Handle	
25	M414229P	Transformer	Multitap; R3, RD and RM control suffixes
	M412412P	Transformer	RQ and RT control suffixes
26	808210	Screw	4 required; R3, RD and RM control suffixes; Use with 4 of 23951 Nut to attach item 25
	33562	Screw	4 required; RQ and RT control suffixes; Use with 4 of 23951 Nut to attach item 25
27	M412538	Terminal Block	2 required; Use 2 of M413621 Fuse for RM and RT control suffixes; Use M412996 Fuse for RQ control suffix
28	M412405P	Reversing Contactor	Cylinder drive motor
29	N/A	Auxiliary Contact Block	RT control suffix
30	70323701P	Contactor	Fan

N/A = Part no longer available

© Copyright, Alliance Laundry Systems LLC – DO NOT COPY or TRANSMIT

Junction Box Harnesses

CE Models
Models with R3, RD, RM, RQ and RT Control Suffixes;
380, 400-415 Volt/50 Hertz/3 Phase

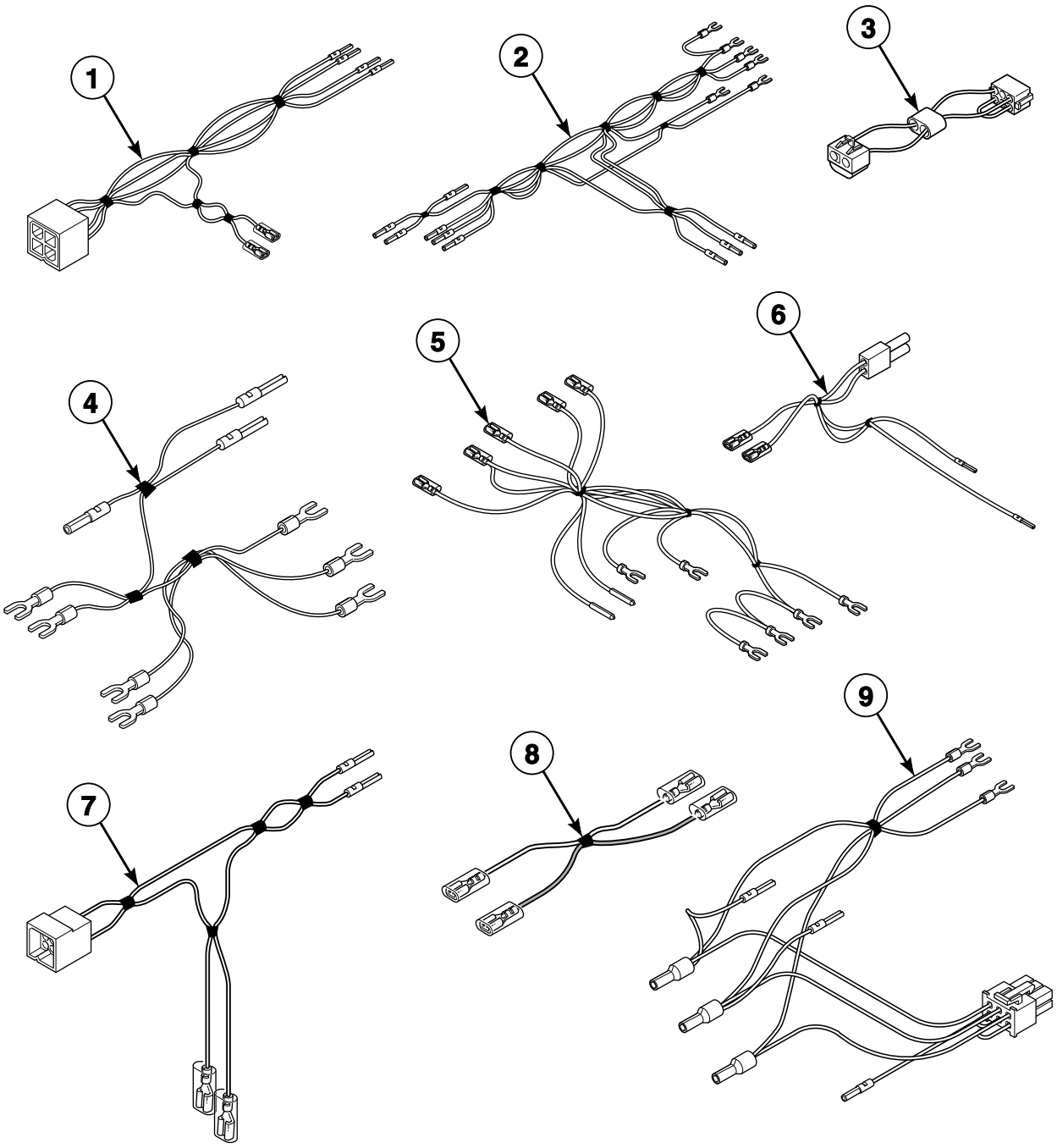

TMB2596P_70399801

© Copyright, Alliance Laundry Systems LLC – DO NOT COPY or TRANSMIT

Junction Box Harnesses

REF	PART NO.	DESCRIPTION	COMMENTS
1	M414028	Transformer Harness Assembly	Primary; R3, RD, RM and RT control suffixes
	M414029	Transformer Harness Assembly	RT control suffix; Secondary
2	M414224	Relay Harness Assembly	R3, RD, RM and RQ control suffixes
3	M413508	Jumper Harness Assembly	380 Volt
	M413509	Jumper Harness Assembly	415 Volt
4	M412928	Reversing Jumper Harness Assembly	2 required; Upper
	M412929	Reversing Jumper Harness Assembly	Lower
	M414034	Reversing Contactor Harness Assembly	R3, RD, RM and RQ control suffixes
5	N/A	Reversing Timer Harness Assembly	RT control suffix
6	M412641	Transformer Harness Assembly	RQ control suffix
7	44030501	Transformer Harness	HU, PU, SU, UU and XU models; RT control suffix; Secondary
8	44042801	Jumper Set Assembly	R3 and RD control suffixes
9	M414077	Jumper Wire	R3, RD and RM control suffixes

N/A = Part no longer available

© Copyright, Alliance Laundry Systems LLC – DO NOT COPY or TRANSMIT

Notes

© Copyright, Alliance Laundry Systems LLC – DO NOT COPY or TRANSMIT

Parts Index

A

Access Panel
44012702P 37

Access Panel Trim
70399403 37
70399404 37

Actuator Arm Assembly
H96387501 ..... 81, 83, 87, 89

Adapter
70131901 77

Adjustable Buzzer
D505447 ..... 23, 27

Airflow Switch Bracket
430370 69

Airflow Switch Harness Assembly
M413042P 69

Airflow Switch Vane
70502301 69

B

Ball Bearing
H87672374 55
M401375P 65
M414367 55
44104801 59

Ball Bearing Insert
H8768212H 59

Ball Valve
M413016 71
M413017 ..... 73, 75

Base Bracket
H96428693 ..... 57, 61, 67

Bearing Mounting
H96428008 53

Bearing Mounting Flangette
H8768302H 59

Bearing Retainer
M401370 65

Belt
H8753170H 61
H87532685 65
H87533014 55

Belt Adjustment Tube
H96428487 55

Belt Guard
M411222 47
M411223P 47
M414491P 47
M414492P 47

Belt Guard Cover
M414284 49

Belt Set
H87533816P 55

Blower Cover
H96358007 ..... 59, 63
M414237 65

Blower Motor Base Kit
H608P3 ..... 59, 61, 63

Blower Shaft
M412000 59

Bolt
H8830143H 51
44017901 43

Burner
M412025P 71, 73, 75
M414243 71

Burner Opening Cover
M413099 75

Burner Orifice
70684116 79
70684118 79
70684120 79
70684122 79
70684124 79
70684126 79
70684129 79
70684132 79
70684143 79
70684146 79
70684147 79
70684149 79
70684151 79

Bushing
H87529111P 57, 61, 63
H8752922HP 65
H8752985HP 55
M409844 91
M411537 ..... 23, 25, 45, 47, 49, 97, 99
M412917P 59, 65
M412995P 67
M413021 ..... 73, 75
M414459 ..... 81, 83, 87, 89
70346501 35

Buzzer Kit
M4860P3 19

Bypass Harness Assembly
M413168 ..... 97, 99

C

Cabinet Limit Harness
44022701 ..... 59, 63, 67
44108101P 59, 63, 67

Cabinet Limit Harness Assembly
M414261 ..... 59, 67

Cable Tie
M405829 47

Calibration Jumper
70084104P 13

Circuit Board Support
D501523 33
34896 15

Clevis Pin
44091501 ..... 83, 89

Clip
M400976 49
M400984 ..... 47, 49

N/A items do not appear in index.

© Copyright, Alliance Laundry Systems LLC – DO NOT COPY or TRANSMIT

Coil Filter
H96362264 ..... 87, 89, 91
Connector
M403862 63
Contact Base
F8538101 31
Contact Block
44018701 31
44018901 31
Contact Block Switch
F200233401P 31
Contact Switch
F8069501 31
Contactor
70323701P 97, 99, 101
Contactor Box Cover
M413760 ..... 97, 99
Contactor Box End
M413757 ..... 97, 99
M413758 ..... 97, 99
Contactor Box Harness Assembly
M413684P 97, 99
Contactor Box Wrapper
44028401 ..... 97, 99
Control
44063801P 33
Control Assembly
D512202P 25
Control Board
254/00070/00P 29
Control Box
44047201 ..... 23, 25
44047401 ..... 23, 25
Control Box Base
44065301 33
Control Box Cover
44047301 ..... 23, 25
44065201 33
Control Box Harness
44019901 23
44027001P 23
44101001 25
44102101P 25
44111601P 27
Control Box Housing
44065101 33
Control Box Top
44065401 33
Control Bracket
44099301 25
Control Cover
44013301* 15
44013302 15
44013303* 15
44013304 15
44013305* 15
44013306 ..... 15, 17
44013307* 17, 21
44013309* 17, 21
44040107* 27
44040108 27
44040109* 27
44040110 27
44040111* 27
44040112 27
44111701W 17
44111701* 29
44111703W 17
44111703* 29
44111704 29
44111705W 17
44111705* 29
44111717 29
44111719 29
Control Harness
44080201P 33
44100101P 19
44101101P 19
44157501P 33
Control Kit
70228401P 17
Control Mounting Bracket
44012801* 15, 17
44040201* 27
44040202 27
44099501W 17, 21
44099505 21
Control Panel Harness
44019301 17
44019401 13
44027201 17
44027301 13
44054001P 27
44058201P 29
44100401 25
44100501 25
44111201P 29
44111501P 27
Control Plate and Studs Assembly
44099201 19
Control Plate Assembly
44029501 13
44029601 17
44038601 29
44041101 27
Control Trim
44016401 ..... 15, 17, 21
44016402 ..... 15, 17, 21
Conversion Kit
M4577P3 71
Cotter Pin
02470 69
Cylinder and Trunnion Assembly
44054701 51
44054702 51
44054801 51
44054802 51
Cylinder Assembly
H96367545 51
H96427513 51
M409788 51
M409826 51
Cylinder Motor Harness Assembly
M413110 57

D

Damper
H96387519 ..... 81, 83

N/A items do not appear in index.

© Copyright, Alliance Laundry Systems LLC – DO NOT COPY or TRANSMIT

Damper Assembly
H96367685 ..... 87, 89
M409967 ..... 59, 63
Damper Bracket
M414534 ..... 83, 85
M414801 ..... 89, 91
Damper Counterweight
M413331 ..... 81, 83, 87, 89
Damper Motor
M412905P 81, 87
M413592P 81, 83, 87, 89
Damper Motor Harness Assembly
M413086 ..... 81, 83, 87
Damper Rod
M413401 49
Damper Shaft
H96388079 ..... 81, 83
Damper Vane
M413402 49
DIN Valve Adapter Kit
F8382301 93
Display Assembly
D512218P 19
Door Assembly
44028902P 39
44058102P 39
44112101 41
70407401P 39
Door Glass
44008401P 39, 41
44008402P 39
Door Glass Installation Tool
M4221P4 ..... 39, 41
Door Handle
44007901 39
44057702 39
44111901 41
Door Hinge
44075207B 39
70115902 41
Door Hinge Assembly
44075201* 39
44075210 39
Door Hinge Cam Assembly
44035102 39
Door Hinge Lug Assembly
44035001 ..... 35, 39, 41
44035002 39
Door Interlock
M412368 101
Door Latch
M401223 35
Door Ring
44007703 39
Door Ring and Handle Assembly
44112001 41
Door Ring Gasket
44008201P 39, 41
Door Seal Kit
70211902P 39, 41
Door Switch
44018201 35
Door Switch Cover
44001301 35
Door Switch Harness
44019601P 35
Door Switch Wire Channel
44001801 35
44001802 35
Drive Chain
H96388186 ..... 81, 83, 87, 89
Drive Rivet
M400713 ..... 15, 17, 21, 33, 101
Drive Wheel
H96388178 ..... 81, 83, 87, 89

E

Elbow
70079601 77
Electronic Control
44037801P 27
44051004 29
Emergency Stop Button Kit
F200233700P 31
Emergency Stop Harness
44030301 ..... 17, 21
44030302 15
44111401 ..... 29, 99
Emergency Stop Label
44012901 ..... 15, 17, 21, 31
Emergency Stop Pushbutton
F200233500 ..... 15, 17, 21, 31
Emergency Stop Reset Harness
44029401 15
44030201 ..... 17, 21
Emergency Stop Switch Harness Assembly
70083901 31
End Barrier
M412633 101
End Stop
M412615 101
70121001 101
Expansion Clip
70030501 ..... 13, 17, 19
Extension Handle
M412370 101

F

Fan
H96368469 65
Fan and Bushing Assembly
M414546 ..... 59, 63
Fan Bearing Bracket
M414235 65
Fan Contactor
M413614P 97, 99
Fan Motor
44046401P 61
44313501P 67
Fan Motor Harness
44022401 61
Fan Motor Harness Assembly
M413111 61

N/A items do not appear in index.

© Copyright, Alliance Laundry Systems LLC – DO NOT COPY or TRANSMIT

Felt Pad
M402144 47
Fill Hose
F200116 33
Filter
44172101 ..... 87, 89, 91
44172201 ..... 81, 83, 85
Filter Channel
H96388087 ..... 81, 83, 85
44045101 ..... 87, 89, 91
Finger Guard
M412366 101
Flange Bearing
44048301P 53
Front Access Panel
44012609W 37
44012611 37
44012612 37
44012709W 37
44012714 37
Front Panel
44012402 35
44012406W 35
44012502P 35
Front Panel Assembly
44078101*P 35
Front Panel Baffle Seal
70017301 47
Front Panel Harness Assembly
44063201P 31
Fuse
D502592 101
M413118 97
M413623 23
M413889 ..... 23, 25, 101
M414232 25
44310001 99
Fuse Carrier
D502811 ..... 23, 25, 101
Fuse Holder
M413544P 99
Fuse Holder Bracket
M413575 97
M413576 99
Fuse Holder Kit
D502591P 23, 25, 101
Fuse Receptacle
91024P 23, 25, 97

G

Gas Pipe
M411265 71
Gas Valve
M413332P 77
M413470P 71, 73
44166701 ..... 71, 73
44166702 ..... 71, 73
Gas Valve Bracket
M411259 ..... 71, 73
M413019 71
44117501 75
Gas Valve Coil
44042901P 71
Gas Valve Flange Gasket
M412158 71
Gas Valve Harness
44117801 75
44166901 73
Gas Valve Kit
M4883P3 ..... 71, 73
M4951P3 ..... 71, 73
M4952P3 ..... 71, 73
Graphic Overlay
44240501 29
Ground Buss Assembly
M412656 101

H

Hairpin Cotter
44091601 ..... 83, 89
Handle
M412208 101
Handle and Caps Assembly
44049901 43
44049902 43
44049903 43
44049904 43
Handle Bar
70399501B 39
Handle Bumper
70407203 43
70407204 43
Harness Strap
55881 35
Heater Assembly
M414296 75
M414297 75
High Temperature Ignition Lead
44061602P 71, 73, 75
44061605P 71, 73
High Voltage Suppression Cable
44239703 71
Hinge Cam Kit
M4772P3 ..... 39, 41
Hose
44073302 33
44073303 33
Hose Clamp
36801 33
Hose Fitting
44069101 33

I

ICM Return Lead
M411061 ..... 23, 25, 71, 73, 75
Idler Housing
M412612 65
Idler Housing Assembly
M412630 65
Idler Shaft
M414241 65
Ignition Control Harness Assembly
M413534P 23, 25

N/A items do not appear in index.

© Copyright, Alliance Laundry Systems LLC – DO NOT COPY or TRANSMIT

Ignition Control Kit
M4957P3 ..... 23, 25
44264801 ..... 23, 25
Indicator Light
70082201 ..... 13, 15
Insulation
M413538 ..... 47, 49
Insulator
M413862 ..... 97, 99
Interlock Contactor
F330186P 97, 99

J

Jackshaft Assembly
H96357751 55
Jumper Calibration Wire
70324605 19
Jumper Configuration Assembly
M413507 97
M413510 99
Jumper Harness Assembly
M413506 97
M413508 ..... 99, 103
M413509 ..... 99, 103
Jumper Set Assembly
44042801 103
Jumper Wire
M414077 103
Junction Box Cover
M412650 101

K

Key
H8752006H 57, 59
M400993 65
M401327 65
70155601 33
Kickplate
70117609 43
70117610 43
70117611 43
70117612 43
Knob
M410927 13
44020501 13

L

Label
70537101 35
Lever Arm Switch
44021701 69
Light
801432 33
Limit Thermostat
M411403 ..... 59, 63, 65
M411946 ..... 59, 65
Lint Panel
44012201WP 43
44012202 43
44012301WP 43
44012302P 43
Lint Panel Clip
44017801 43
Lint Panel Switch Bracket
44013401 45
Lint Panel Switch Cover
44026801 45
Lint Panel Switch Harness
44019701P 45
Lint Screen
44063602 47
44063603P 49
44077702P 47
44077703P 49
Lint Screen Clip
H96418413 47
Loading Spring
M400401 65
Lock, Key and Nut Kit
70733701 33
L.P. Conversion Kit
M4592P3 73
L.P. Gas Conversion Kit
M4973P3 71
M4974P3 73
L.P. Kit
M4901P3 77

M

Main Harness
44019501 ..... 23, 25
44027101 ..... 23, 25
Male Tab Terminal
00177 27
Manual Reset Thermostat
M413989 ..... 73, 75
Master Link
H96382072P 81, 83, 87, 89
Membrane Switch
M414368P 17
44037901P 27
Mixing Valve
36958P 33
Motor
44046301P 63
44046601P 67
44052901P 57
44053001P 57
Motor Adjustment Tube
H96428628 61
Motor Base
M413171 ..... 57, 61, 67
Motor Bracket
H96388145 ..... 81, 83, 87, 89
Mount Bracket
M414276 ..... 97, 99
Mounting Bracket
70080701 13
Mounting Insulation
H96418728 69

N/A items do not appear in index.

© Copyright, Alliance Laundry Systems LLC – DO NOT COPY or TRANSMIT

Mounting Switch Base
M412187P 101

N

Nameplate
44010401 37
44010601 37
44035801 37
70243901 37
70348501 37
70348601 37
Nameplate Overlay
M412963 37
44104501 37
44130401 37
44130501 37
70128901 ..... 13, 37
70410201 37
Network Capacitor Assembly
M413863 ..... 97, 99, 101
Network Capacitor Harness Assembly
M413878 ..... 97, 99
Nipple
H85101673 73
Nut
H88412093 ..... 55, 57, 61, 67
H88412101 ..... 51, 53, 55, 57, 61, 67
M400977 ..... 15, 17, 21, 37
M400979 69
M412334 51
M412688 101
M414215 ..... 39, 41
02788 35
20274 ..... 47, 53, 55, 57, 59, 61, 63, 67
23951 ..... 39, 41, 47, 49, 81, 83, 85, 87, 89, 91
24205 19
29786 ..... 35, 39, 41, 67, 81, 83, 85, 87, 89, 91
29787 ..... 19, 27, 29
44087101 43
70030401 ..... 35, 47
70054 ..... 13, 17, 19, 27, 39, 43, 47, 49, 59, 63
70142 ..... 57, 59, 61, 63, 67, 81, 83, 87, 89
N.G. Kit
M4900P3 77

O

Overlay
259/00005/00 29
44130001 17
70114502 13
70128401 17
70128601 17
70130501 17
70130701 17
70135301 17
70362202 19
70362402 19
70362502 19

P

Panel Locator
56079 19
Pipe Bracket
M411498 71
M412954 75
Pipe Cap
44087801 75
Pipe Keeper Bracket
44117901 75
Pipe Nipple
M411417 ..... 71, 73
M411418 71
M413023 ..... 73, 75
431486 77
901403 77
Pipe Union
M411419 ..... 71, 73, 77
Plug
M400985 ..... 59, 97, 99
Pop Rivet
430725 45
44166601 35
70126301 ..... 39, 43
70126401 43
Porcelain Touch-Up Paint
122P4P 35
215P4P 35
370P4P 35
Pushbutton
44018801 31
Pushbutton Switch
M413431 ..... 15, 17, 21
70413301 45
Push-to-Start Switch
801434W 33

R

Reducing Tee
44117401 77
Relay
M412534 ..... 15, 101
Relay Harness Assembly
M414224 103
Relay/Buzzer Bracket
44041701 27
Retaining Ring
H88602263 55
H88603477 55
Reversing Contactor
M412405P 101
M413615P 97
Reversing Contactor Harness Assembly
M414034 103
Reversing Contactor Jumper Assembly
M413624 ..... 97, 99
Reversing Jumper Harness Assembly
M412928 103
M412929 103

N/A items do not appear in index.

© Copyright, Alliance Laundry Systems LLC – DO NOT COPY or TRANSMIT

Reversing Timer
M412081 ..... 97, 99, 101
Reversing Timer Harness
44008001 ..... 97, 99
Rocker Switch
M413270 13
44099601 19
70455101 19
70461301 19
Rod End
44048501 ..... 55, 57, 61, 67
Roll Pin
H88970256 ..... 81, 83, 87, 89
Roller Catch
H87020202 ..... 43, 49
Roller Catch Mounting Bracket
44014001 43
Rotation Sensor Assembly
70417401P 95
Rotation Sensor Bracket
44111101 95
Rotation Sensor Kit
7009P 27, 29
7010P 27, 29, 95

S

Screw
D501086 ..... 43, 81, 83, 85, 87, 89, 91, 99, 101
D501524 25
F430116 ..... 47, 59, 61, 63, 65
H88001565 ..... 55, 57, 61
H8800901H 59, 63
H88010038 67
H88010574 ..... 81, 83, 87, 89
H88012034 53
H88213996 53
M400044 ..... 39, 41, 49, 97, 99
M400056 ..... 57, 59, 61, 63, 67
M400063 ..... 55, 57
M400071 101
M400072 35
M400661 ..... 39, 41
M401938 69
M402574 35
M402797 15
M402917 ..... 97, 99
M405188 ..... 81, 83, 87, 89
M411072 ..... 47, 49
M411143 ..... 23, 25
M411165 53
M413528 67
20253 ..... 81, 87
22688 ..... 55, 57, 59, 61, 67
33562 101
430497 ..... 15, 21, 23, 25, 33, 45, 47, 49, 59, 63, 69, 71, 73, 75, 85, 91, 99, 101
430757 43
431287 35
44023301 ..... 35, 39, 41
44041301 13
44048901 59
44079301 ..... 59, 61
44161501 67
51778 ..... 97, 99
51780 ..... 23, 25, 33, 97, 99, 101
51782 ..... 71, 73, 75
61199 ..... 39, 41, 43, 47, 49, 59, 63, 81, 83, 87, 89
70033504 ..... 35, 39, 41
70118801 ..... 23, 25
70126201 39
70182601 35
70187202 65
70321501 ..... 81, 83, 85, 87, 89, 91
70409801 39
800930 ..... 13, 15, 17, 19, 21, 97, 99
808210 ..... 81, 83, 85, 87, 89, 91, 101
Security Cover Kit
M4795P3W 13, 15, 17, 19, 21
Sensor Cable Harness
44319902P 47, 49
Sensor Harness Assembly
44082701P 33
Sensor Wire
M414287 23
Shaft Collar
M414451 ..... 81, 83, 87, 89
Sheave
H8752026H 55, 57
H87520284 59
H87520334 ..... 55, 57, 61
H87520466 ..... 55, 57
H8752060H 65, 67
H8752065H 65, 67
H8752251H 55
Snap Bushing
M400770 ..... 23, 25
M402542 75
70178701 ..... 23, 25, 33
Solenoid Valve DIN Connector
70370301P 93
Spacer
M401402 ..... 51, 53
Spark Electrode
44328701P 71, 73, 75
Spark Igniter
M410905P 71
Spray Paint
286P4 35
297P4 35
298P4P 35
381P4 35
382P4 35
Spring Pin
H88900683 ..... 81, 83, 87, 89
Spud Holder Weldment
44390001 71
44390002 ..... 73, 75
Start Switch
70108501 13
Steam Coil
H96382023P 81, 83, 85
M409833P 87, 89, 91
M409834P 87, 89, 91
Steam Coil Filter
H96382106 ..... 81, 83, 85
Steam Coil Housing Cover
44018501 ..... 87, 89
Steam Coil Housing End
44114901 85
44115001 91

N/A items do not appear in index.

© Copyright, Alliance Laundry Systems LLC – DO NOT COPY or TRANSMIT

Steam Coil Support
M411550 ..... 81, 83, 85
M412201 ..... 87, 89, 91
Steam Cover
44018401 81
44114501 85
44114601 91
44115101 83
44115201 89
Steam Damper Actuator
44096401 83
44096501 89
Steam Filter Top Hinge Assembly
44088101 ..... 83, 85, 87, 89, 91
Steam Heater Assembly
M414458 ..... 81, 83
M414482 ..... 81, 83
M414485 ..... 87, 89
M414490P 87, 89
44114701P 85
44114801 91
Steam Solenoid
70351011P 93
70351012 93
Steam Valve
F8322902 93
F8322903 93
Steam Valve Coil
M412258 93
Steam Valve Rebuild Kit
M412259 93
70351021P 93
Step Pulley and Bearing Kit
M4696P3 55
Stove Assembly
M411097 71
M412016P 73, 75
Stove Gasket
M411505 ..... 71, 73, 75
Stove Limit Bypass Jumper
44115301 75
Stove Limit Harness Assembly
M413041 ..... 73, 75
M413104P 71
Stove Limit Harness Bracket
431078 ..... 71, 73, 75
Stove Limit Thermostat
M411404 ..... 71, 73
431177 73
Stove Partition Gasket
44333501 ..... 71, 73, 75
Street Elbow
M411264 71
Switch Plate
M413236 ..... 13, 19

T

Temperature Kit
70475001P 13
Temperature Knob
44104601 ..... 13, 19
Temperature Selector Switch
D511711 19
Temperature Selector Switch Bracket
70391701 19
Temperature Sensor Assembly
B12308601 ..... 47, 49
Terminal Block
M405364 ..... 97, 99
M412538 101
M412631 101
M412632 101
430642 ..... 97, 99
Terminal Strip
M413542 ..... 97, 99
Thermistor
M414704 ..... 47, 49
44064701 ..... 33, 47
Thermistor Bracket Assembly
44051301 ..... 47, 49
Thermostat
H8900530H 59, 63, 65
M413988 ..... 71, 73
Thermostat Cover
M414477 ..... 71, 73, 75
Thermostat Module
431347P 15
Timer
M412079P 13
70131701P 13
70131801P 13
Timer Knob
70082101 13
Top Access Panel Gusset
44028201* 47
44028202* 47
44028301* 49
44028302* 49
Transformer
M412412P 101
M414228P 97
M414229P 99, 101
44074401 99
Transformer Harness
44030501 103
Transformer Harness Assembly
M412641 103
M414028 103
M414029 103
Trunnion Assembly
44055501 51
44240801 51

U

Union
H86000031 77
USB IR Interface Kit
203346 ..... 17, 19

V

Valve Coil
F8514801 93
Valve Converted Label
60517 77

N/A items do not appear in index.

© Copyright, Alliance Laundry Systems LLC – DO NOT COPY or TRANSMIT

Valve Kit
F8521701 93
Valve Rebuild Kit
F8379502 93
Valve Replacement Kit
M4904P3 71
M4909P3 77
Vent Elbow
H87494019 47
Vent Pipe
M411185 47
M411187 47

W

Warning Label
44324001 ..... 97, 99, 101
Washer
M400013 ..... 57, 59, 61, 63, 67, 81, 83, 87, 89
M400014 ..... 55, 57, 59, 61, 63, 65, 67
M400015 53
M400080 ..... 57, 59, 61, 63, 65, 67
M400081 ..... 55, 59, 61
M405535 43
03815 ..... 13, 15, 17, 19, 21, 99
56552 ..... 59, 61, 63
70261401 ..... 51, 53, 55, 57, 61, 67
70409301 39
800465 ..... 35, 39, 41, 83, 89

N/A items do not appear in index.

© Copyright, Alliance Laundry Systems LLC – DO NOT COPY or TRANSMIT

Notes

© Copyright, Alliance Laundry Systems LLC – DO NOT COPY or TRANSMIT