Drying Tumblers

50 Pound Capacity

Models Through Serial No. 0904002963

Refer to Page 5 for Model Numbers

Parts

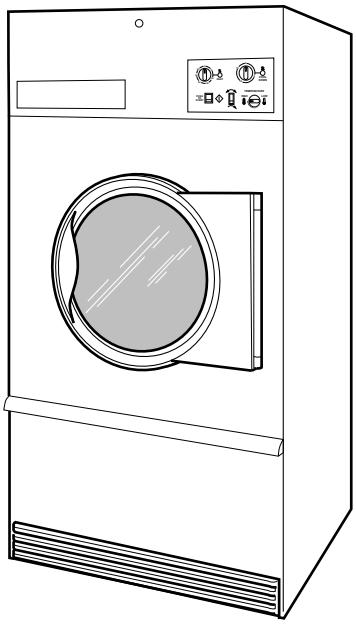

TMB795C_70409101

Alliance™ Laundry Systems

www.alliancelaundry.com

Part No. 70409101R22
July 2025

Table of Contents

Title	Page
Parts Ordering Information	3
Serial Plate Location	3
Model Identification	5
Product Overview - Heat Source and Voltage	6
Product Overview - Control Suffixes (Drawing 1 of 3)	8
Product Overview - Control Suffixes (Drawing 2 of 3)	10
Product Overview - Control Suffixes (Drawing 3 of 3)	12
Control Box	14
Fire Suppression System Control Box	16
Electromechanical Coin Drop	18
Coin Meter	20
Single Drop Controls	22
Manual Dual Timer Controls (Drawing 1 of 2)	24
Manual Dual Timer Controls (Drawing 2 of 2)	26
Dual Digital Timer Controls	28
DMP Control	30
DX4 Electronic Control	32
OPL Microprocessor Controls	34
Coin Drop Components for MDC Models	36
Central Pay and Card Reader MDC Models	38
Optional Card Reader Mountings for MDC Models	40
Coin Drops	42
Coin Drop Kits	44
Coin Drop Components for NetMaster Models	46
Card Reader NetMaster Models	48
Network Connection for NetMaster Models	50
Emergency Stop Button - CE Models	52
Cabinet Front Components (Drawing 1 of 2)	54
Cabinet Front Components (Drawing 2 of 2)	56
Cabinet Panels and Nameplates (Drawing 1 of 2)	58
Cabinet Panels and Nameplates (Drawing 2 of 2)	60
Front Panel Assemblies (Drawing 1 of 3)	62
Front Panel Assemblies (Drawing 2 of 3)	64
Front Panel Assemblies (Drawing 3 of 3)	66
Lint Panel Switch Assembly - Models Through Serial No. 020802177	68
Lint Panel Switch Assembly - Models Starting Serial No. 020802178	70
Lower Cabinet Front Components	72
Cabinet Limit and Thermistor Assembly	74
Cabinet Components	76
Door and Hinge Components (Drawing 1 of 2)	78
Door and Hinge Components (Drawing 2 of 2)	80

© Copyright 2025, Alliance Laundry Systems LLC

All rights reserved. No part of the contents of this book may be reproduced or transmitted in any form or by any means without the expressed written consent of the publisher.

Cylinder and Trunnion Components 82
Trunnion Housing Components 84
Cylinder, Trunnion and Bearing Assemblies and Kits 86
Trunnion and Bearing Assemblies 88
Reversing Cylinder Drive Motor and Components 90
Drive Components for Reversing Models 92
Drive Components for Nonreversing Models 94
Idler Housing Assembly for Reversing Models 96
Idler Housing Assembly for Nonreversing Models 98
Idler Assembly for Nonreversing Models 100
Fan Components 102
Fan Motors 104
Gas Heater Components (Drawing 1 of 2) 106
Gas Heater Components (Drawing 2 of 2) 108
Burner Orifices for Non-CE Models 110
Gas Heater Components - Rear View 112
Electric Heater Components for Non-CE Models 114
Electric Heater Components for CE Models 116
Airflow Switch Assembly 118
Steam Heater and Valve 120
Rotation Sensor 122
Duct and Damper Assembly 124
Rear Panel Assembly 126
Contactor Box Assembly Harnesses (Drawing 1 of 3) 128
Contactor Box Assembly Harnesses (Drawing 2 of 3) 130
Contactor Box Assembly Harnesses (Drawing 3 of 3) 132
Contactor Box Assembly (Drawing 1 of 21) 134
Contactor Box Assembly (Drawing 2 of 21) 136
Contactor Box Assembly (Drawing 3 of 21) 138
Contactor Box Assembly (Drawing 4 of 21) 140
Contactor Box Assembly (Drawing 5 of 21) 142
Contactor Box Assembly (Drawing 6 of 21) 144
Contactor Box Assembly (Drawing 7 of 21) 146
Contactor Box Assembly (Drawing 8 of 21) 148
Contactor Box Assembly (Drawing 9 of 21) 150
Contactor Box Assembly (Drawing 10 of 21) 152
Contactor Box Assembly (Drawing 11 of 21) 154
Contactor Box Assembly (Drawing 12 of 21) 156
Contactor Box Assembly (Drawing 13 of 21) 158
Contactor Box Assembly (Drawing 14 of 21) 160
Contactor Box Assembly (Drawing 15 of 21) 162
Contactor Box Assembly (Drawing 16 of 21) 164
Contactor Box Assembly (Drawing 17 of 21) 166
Contactor Box Assembly (Drawing 18 of 21) 168
Contactor Box Assembly (Drawing 19 of 21) 170
Contactor Box Assembly (Drawing 20 of 21) 172
Contactor Box Assembly (Drawing 21 of 21) 174
Parts Index 177

© Copyright, Alliance Laundry Systems LLC – DO NOT COPY or TRANSMIT

Parts Ordering Information

If literature or replacement parts are required, contact the source from whom the machine was purchased or contact Alliance Laundry Systems at (920) 748-3950 for the name and address of the nearest authorized parts distributor.

For technical assistance, call the number listed below:

(920) 748-3121 Ripon, Wisconsin

Serial Plate Location

When calling or writing about your product, be sure to mention model and serial numbers. Model and serial numbers are located on serial plate(s) as shown.

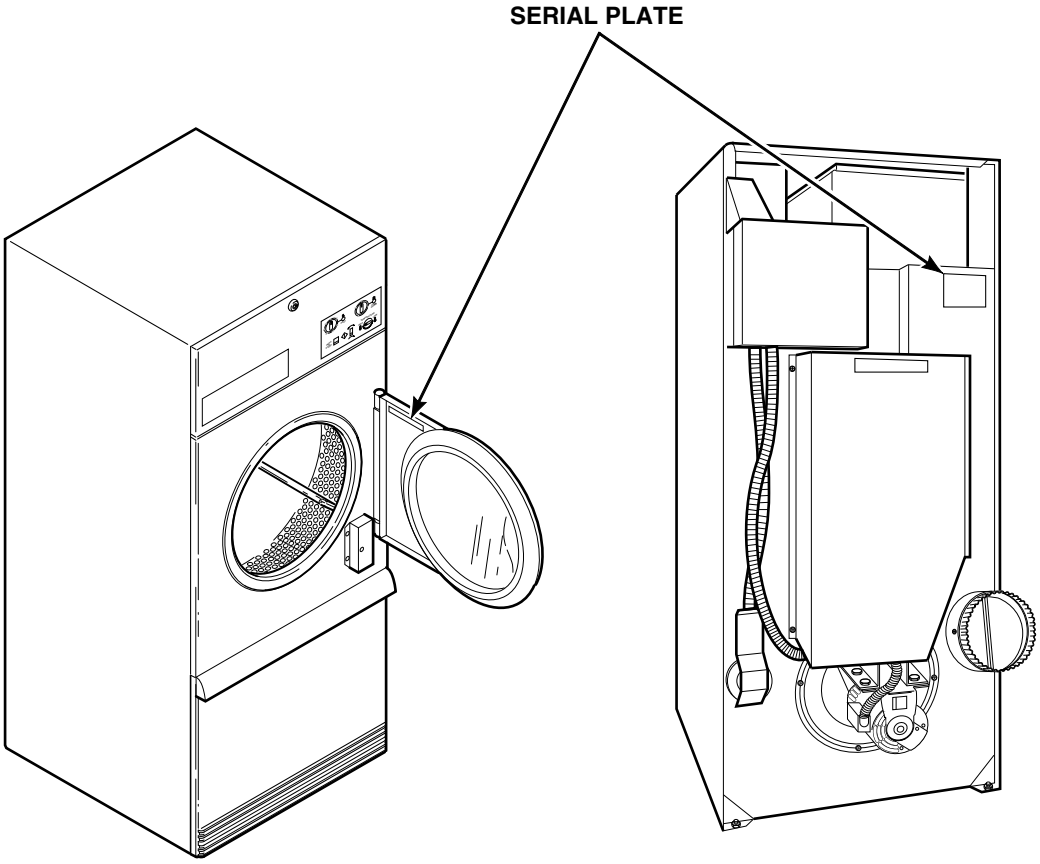

TMB803N_70409101

© Copyright, Alliance Laundry Systems LLC – DO NOT COPY or TRANSMIT

Notes

© Copyright, Alliance Laundry Systems LLC – DO NOT COPY or TRANSMIT

Model Identification

Information in this manual is applicable to these tumbler models:

BA050L
BA050N
BT050D
BT050E
BT050L
BT050N
BT050S
BT050T
BU050E
BU050L
BU050N
BU050S
BU050T
CA050L
CA050N
CT050E
CT050L
CT050N
CT050S
CT050T
CU050E
CU050L
CU050N
CU050S
CU050T
GA050L
GA050N
GT050E
GT050L
GT050N
GT050S
GT050T
GU050E
GU050L
GU050N
GU050S
GU050T
HA050L
HA050N
HT050D
HT050E
HT050L
HT050N
HT050S
HT050T
HU050E
HU050L
HU050N
HU050S
HU050T
IT050E
IT050L
IT050N
IT050S
IT050T
KA050L
KA050N
KT050E
KT050L
KT050N
KT050S
KT050T
KU050E
KU050L
KU050N
KU050S
KU050T
LA050L
LA050N
LT050E
LT050L
LT050N
LT050S
LT050T
LU050E
LU050L
LU050N
LU050S
LU050T
PA050L
PA050N
PT050E
PT050L
PT050N
PT050S
PT050T
PU050E
PU050L
PU050N
PU050S
PU050T
SA050L
SA050N
ST050D
ST050E
ST050L
ST050N
ST050S
ST050T
SU050E
SU050L
SU050N
SU050S
SU050T
UA050L
UA050N
UT050E
UT050L
UT050N
UT050S
UT050T
UU050E
UU050L
UU050N
UU050S
UU050T
YT050E
YT050L
YT050N
YT050S
YT050T
NT050L_SERIAL_THROUGH_0904
NT050N_SERIAL_THROUGH_0904

Control Suffixes (7th and 8th characters):

3O - DX4 OPL
3V - DX4 vended
3X - DX4 prep for coin
BC - basic electronic, coin
BL - basic electronic, central pay
BU - basic electronic, prep card-open
BX - basic electronic, prep for coin
BY - basic electronic, prep for card
CD - rotary coin drop
CX - prep for coin drop
CY - prep for card
DO - DMP OPL
DV - DMP vended
DX - DMP prep for coin
MT - manual timer
NC - NetMaster coin
NR - NetMaster card
NX - NetMaster, prep for coin
NY - NetMaster, prep for card
OM - OPL Micro
QT - dual digital timer
R3 - reversing DX4 OPL
RD - reversing DMP OPL
RM - reversing OPL Micro
RQ - reversing dual digital timer
RT - reversing manual timer
SD - single drop
SX - single drop, prep for coin
ZC - NetMaster network, coin
ZR - NetMaster network, card
ZX - NetMaster network, prep for coin
ZY - NetMaster network, prep for card

© Copyright, Alliance Laundry Systems LLC – DO NOT COPY or TRANSMIT

Product Overview - Heat Source and Voltage

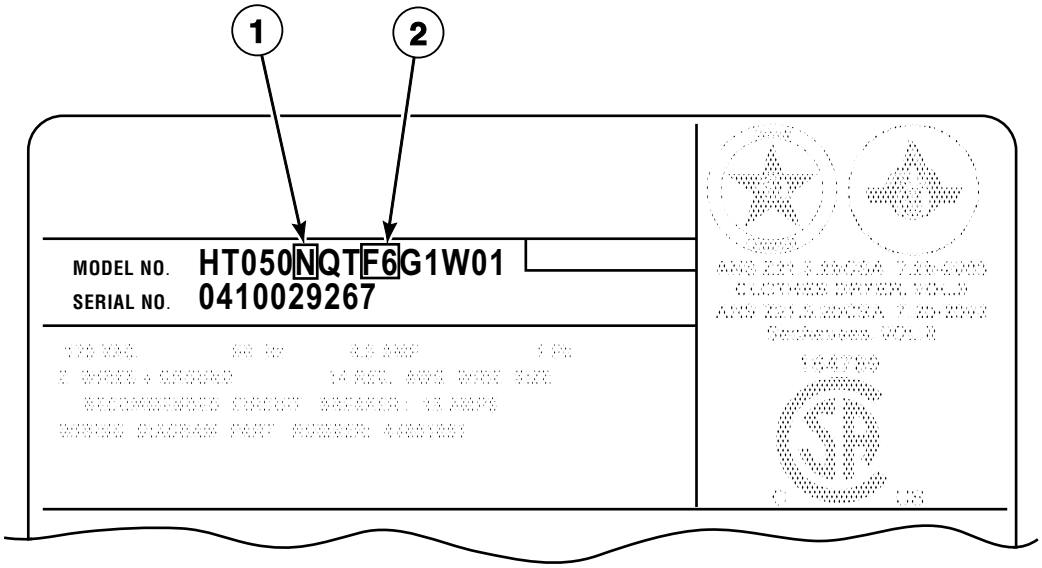

TMB2730P_70409101

© Copyright, Alliance Laundry Systems LLC – DO NOT COPY or TRANSMIT

Product Overview - Heat Source and Voltage

REF	PART NO.	DESCRIPTION	COMMENTS
1	-	Heat Source	D: Liquid Petroleum Gas (L.P.) E: Electric L: Liquid Petroleum Gas (L.P.) N: Natural Gas (N.G.) S: Steam T: Thermal Oil
2	-	Voltage	B1: 120 Volt/60 Hertz/1 Phase F3: 200-208 or 240 Volt/60 Hertz/1 Phase F4: 200 Volt/50 Hertz/3 Phase F5: 200-208 Volt/60 Hertz/3 Phase F6: 200-208 or 240 Volt/60 Hertz/3 Phase J1: 230 Volt/50 Hertz/1 Phase J2: 230-240 Volt/50 Hertz/1 Phase J3: 240 Volt/50 Hertz/1 Phase J5: 230 Volt/50 Hertz/3 Phase J6: 230-240 Volt/50 Hertz/3 Phase J7: 240 Volt/50 Hertz/3 Phase J8: 240 Volt/60 Hertz/3 Phase M1: 380 Volt/50 Hertz/3 Phase M2: 380 or 400-415 Volt/50 Hertz/3 Phase M3: 380 Volt/60 Hertz/3 Phase N1: 400-415 Volt/50 Hertz/3 Phase P1: 440 Volt/60 Hertz/3 Phase Q1: 460-480 Volt/60 Hertz/3 Phase Q2: 480 Volt/60 Hertz/3 Phase

© Copyright, Alliance Laundry Systems LLC – DO NOT COPY or TRANSMIT

Product Overview - Control Suffixes (Drawing 1 of 3)

All Models Except G and K Models

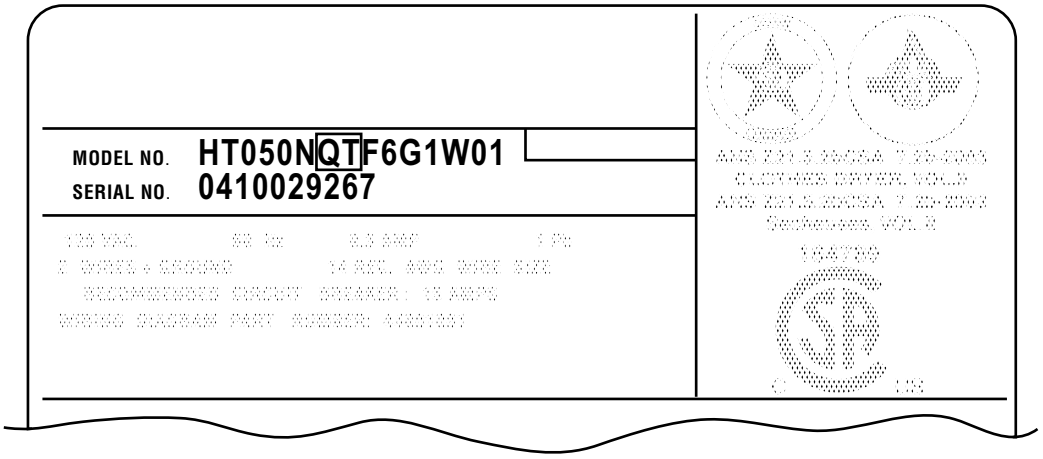

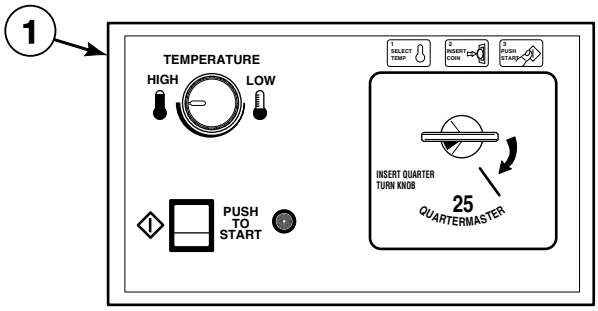

CD, CX and CY Control Suffixes

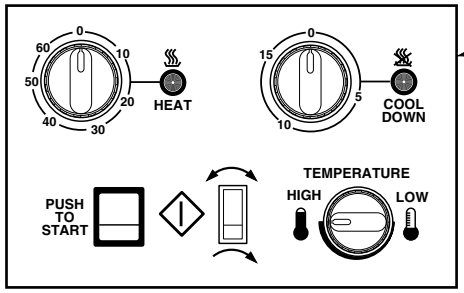

MT and RT Control Suffixes

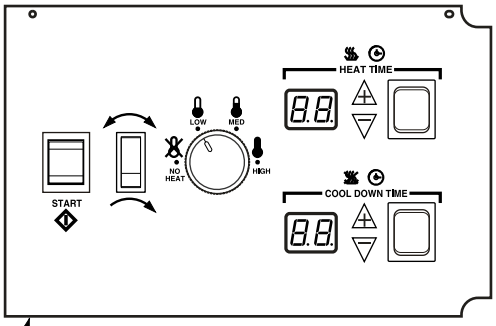

QT and RQ Control Suffixes

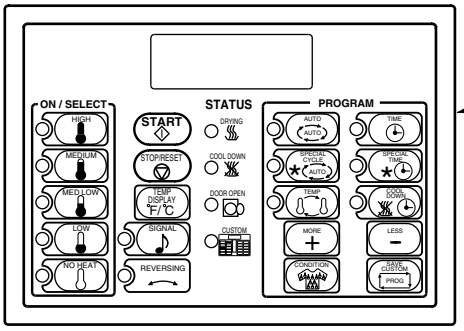

OM and RM Control Suffixes

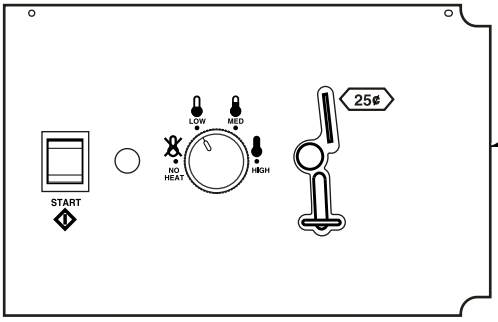

SD and SX Control Suffixes

TMB2725P_70409101

© Copyright, Alliance Laundry Systems LLC – DO NOT COPY or TRANSMIT

Product Overview - Control Suffixes (Drawing 1 of 3)

REF	PART NO.	DESCRIPTION	COMMENTS
1	-	Control - Nonreversing	CD: rotary coin drop CX: prep for coin CY: prep for card
2	-	Control - Nonreversing	MT: manual timer
	-	Control - Reversing	RT: reversing manual timer
3	-	Control - Nonreversing	OM: OPL micro
	-	Control - Reversing	RM: reversing OPL micro
4	-	Control - Nonreversing	SD: single drop SX: single drop, prep for coin
5	-	Control - Nonreversing	QT: dual digital timer
	-	Control - Reversing	RQ: reversing dual digital timer

NOTE: Coin models have the following control suffixes: CD, CX, SD and SX.

NOTE: OPL models have the following control suffixes: CY, MT, OM, QT, RM, RQ and RT.

© Copyright, Alliance Laundry Systems LLC – DO NOT COPY or TRANSMIT

Product Overview - Control Suffixes (Drawing 2 of 3)

All Models Except G and K Models

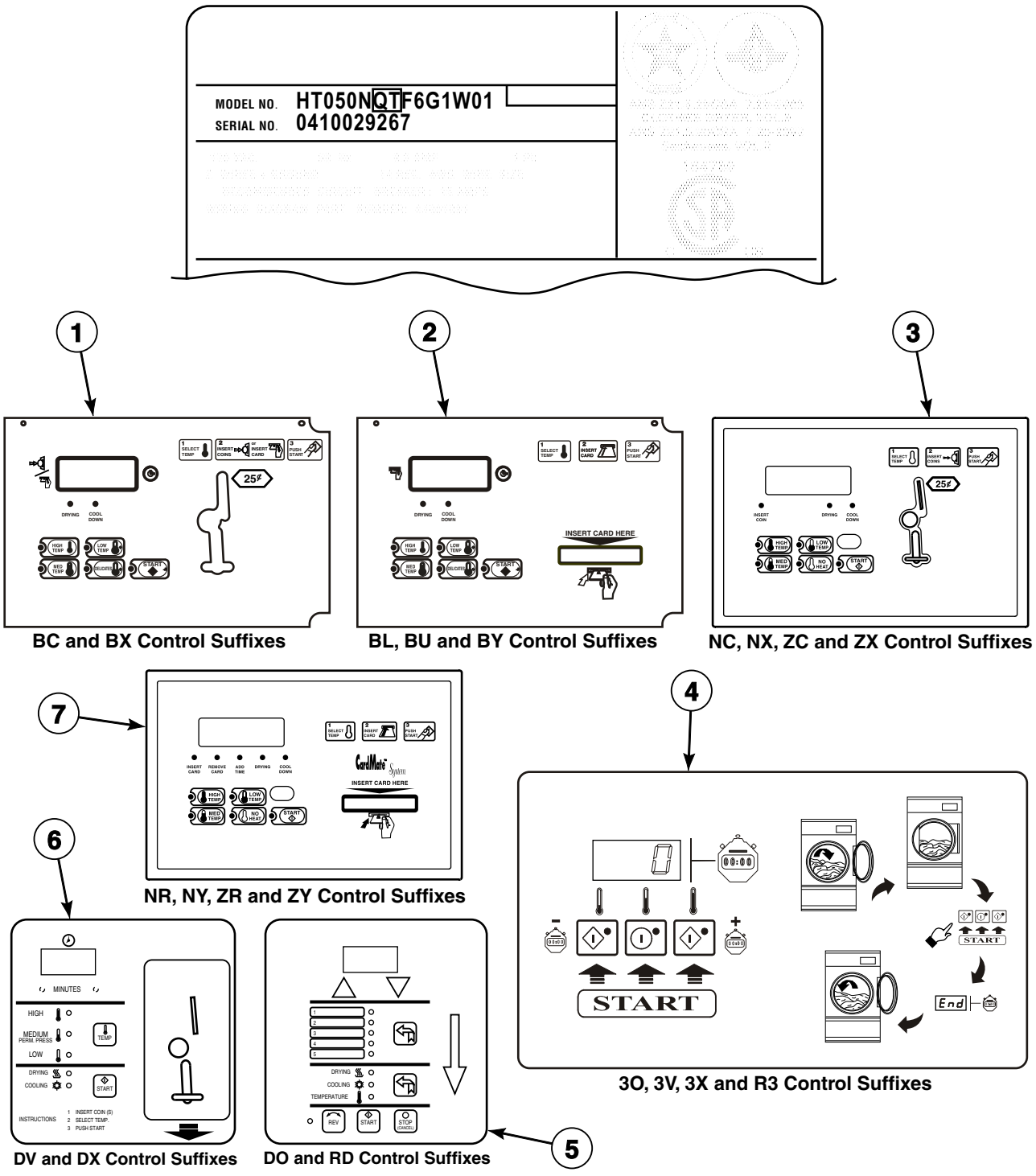

TMB2727P_70409101

© Copyright, Alliance Laundry Systems LLC – DO NOT COPY or TRANSMIT

Product Overview - Control Suffixes (Drawing 2 of 3)

REF	PART NO.	DESCRIPTION	COMMENTS
1	-	Control - Nonreversing	BC: basic electronic, coin BX: basic electronic, prep for coin
2	-	Control - Nonreversing	BL: basic electronic, central pay BU: basic electronic, prep card-open BY: basic electronic, prep for card
3	-	Control - Nonreversing	NC: NetMaster coin NX: NetMaster prep for coin ZC: NetMaster network, coin ZX: NetMaster network, prep for coin
4	-	Control - Nonreversing	3O: DX4 OPL 3V: DX4 vended 3X: DX4 prep for coin
	-	Control - Reversing	R3: reversing DX4 OPL
5	-	Control - Nonreversing	DO: DMP OPL
	-	Control - Reversing	RD: reversing DMP OPL
6	-	Control - Nonreversing	DV: DMP vended DX: DMP prep for coin
7	-	Control - Nonreversing	NR: NetMaster card NY: NetMaster prep for card ZR: NetMaster network, card ZY: NetMaster network, prep for card

NOTE: Coin models have the following control suffixes: 3V, 3X, BC, BX, DV, DX, NC, NX, ZC and ZX.

NOTE: OPL models have the following control suffixes: 3O, BL, BU, BY, DO, NR, NY, R3, RD, ZR and ZY.

© Copyright, Alliance Laundry Systems LLC – DO NOT COPY or TRANSMIT

Product Overview - Control Suffixes (Drawing 3 of 3)

G and K Models

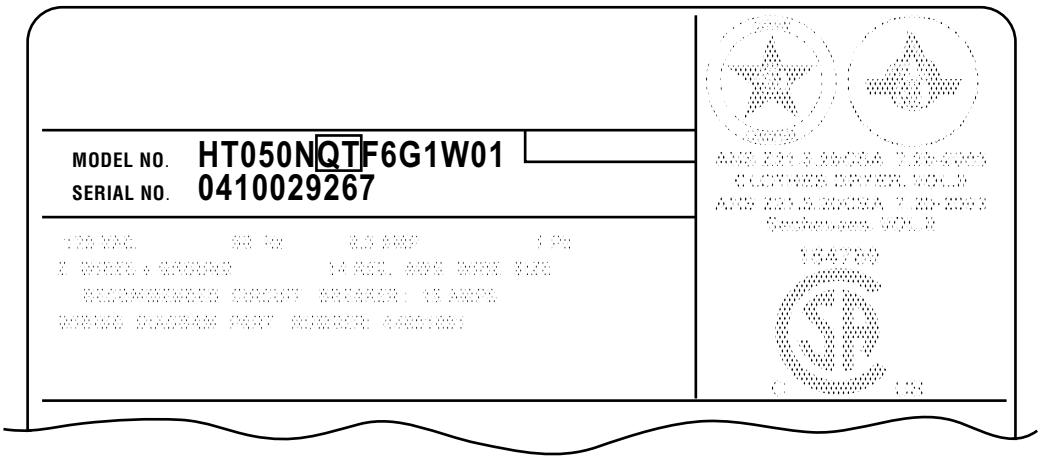

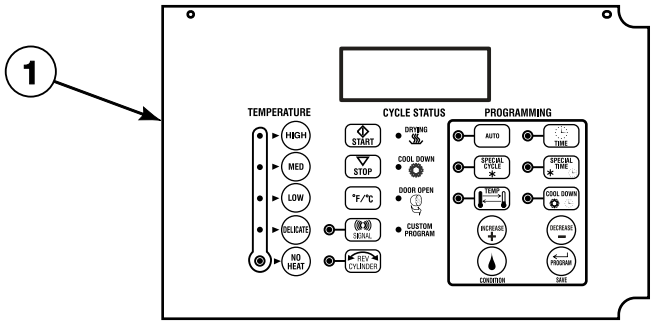

OM and RM Control Suffixes

TMB2726P_70409101

© Copyright, Alliance Laundry Systems LLC – DO NOT COPY or TRANSMIT

Product Overview - Control Suffixes (Drawing 3 of 3)

REF	PART NO.	DESCRIPTION	COMMENTS
1	-	Control - Nonreversing	OM: OPL micro
	-	Control - Reversing	RM: reversing OPL micro

NOTE: OPL models have the following control suffixes: OM and RM.

© Copyright, Alliance Laundry Systems LLC – DO NOT COPY or TRANSMIT

Control Box

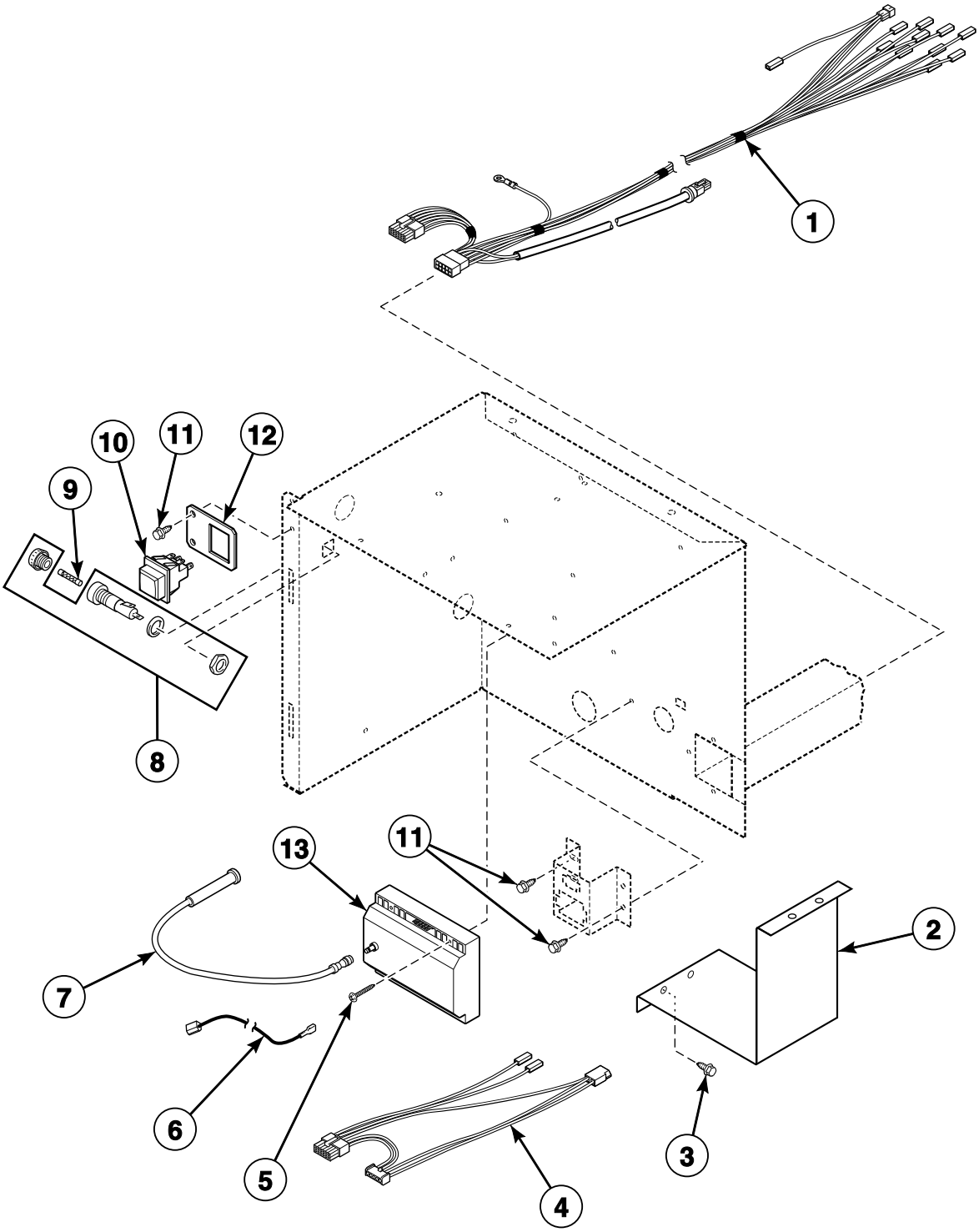

TMB1256P_70409101

© Copyright, Alliance Laundry Systems LLC – DO NOT COPY or TRANSMIT

Control Box

REF	PART NO.	DESCRIPTION	COMMENTS
	203346	USB IR Interface Kit	
1	44006301P	Main Harness	Non-CE models
	44006401P	Main Harness	CE models; Models with CD, CX, CY, MT and RT control suffixes through Serial No. 0602002257
	44098701	Main Harness	CE models; Models with 3O, 3V, BC, BL, BU, BX, BY, DO, NC, NR, NX, NY, OM, QT, RD, RM, RQ, SD, SX, ZC, ZR, ZX and ZY control suffixes starting Serial No. 0602002258
2	N/A	Ignition Control Shield	All models except B, C, I and N models; NC, NR, NX, NY, ZC, ZR, ZX and ZY control suffixes
3	51780	Screw	All models except B, C, I and N models; 4 required
4	M413678P	Control Box Harness Assembly	Non-CE and non-Australian gas models
	M413679	Control Box Harness Assembly	Non-CE and non-Australian steam models; Bypass
	M413680	Control Box Harness Assembly	Non-CE and non-Australian electric models
	M413824	Control Box Harness Assembly	Australian models
	M413993	Control Box Harness Assembly	CE gas models
	44045601	Control Box Harness	CE electric models
	M413168	Bypass Harness Assembly	CE steam models
5	70069901	Screw	Gas models; 2 required
	M411143	Screw	Australian models; 2 required
6	M411061	ICM Return Lead	Australian models; Use with M410904P Instant Electronic Ignition Control
7	44061603	High Temperature Lead	Non-Australian models; Use with 70367301P or 70367401P Ignition Control
	44061604	High Temperature Lead	Australian models; Use with M410904P Instant Electronic Ignition Control
	44239703	High Voltage Suppression Cable	Use with 70483201P or 70458601P Ignition Control
8	91024P	Fuse Receptacle	Non-CE models
9	M414232	Fuse	Non-CE models; 3.5 Amp
10	M413431	Pushbutton Switch	CE gas models; Reset
11	430497	Screw	
12	44005101	Lighted Switch Bracket	CE gas models
13	M4954P3	Ignition Control Kit	Australian gas models through Serial No. 0107002063; MT and RT control suffixes
	M4955P3	Ignition Control Kit	Australian gas models through Serial No. 0107002063; OM and RM control suffixes
	M4956P3	Ignition Control Kit	Australian gas models starting Serial No. 0107002064
	44264701	Ignition Control Kit	CE gas models
	44264601	Ignition Control Kit	Non-CE and non-Australian gas models except BT050D, HT050D and ST050D
	M4982P3	Ignition Control Kit	Models BT050D, HT050D and ST050D

N/A = Part no longer available

© Copyright, Alliance Laundry Systems LLC – DO NOT COPY or TRANSMIT

Fire Suppression System Control Box

B, C and I Models Starting Serial No. 0609000375 and All G, H, K, S and U Models
Models with a F, K, L, T or U in the 11th character (ST050NRTF6K1W01)

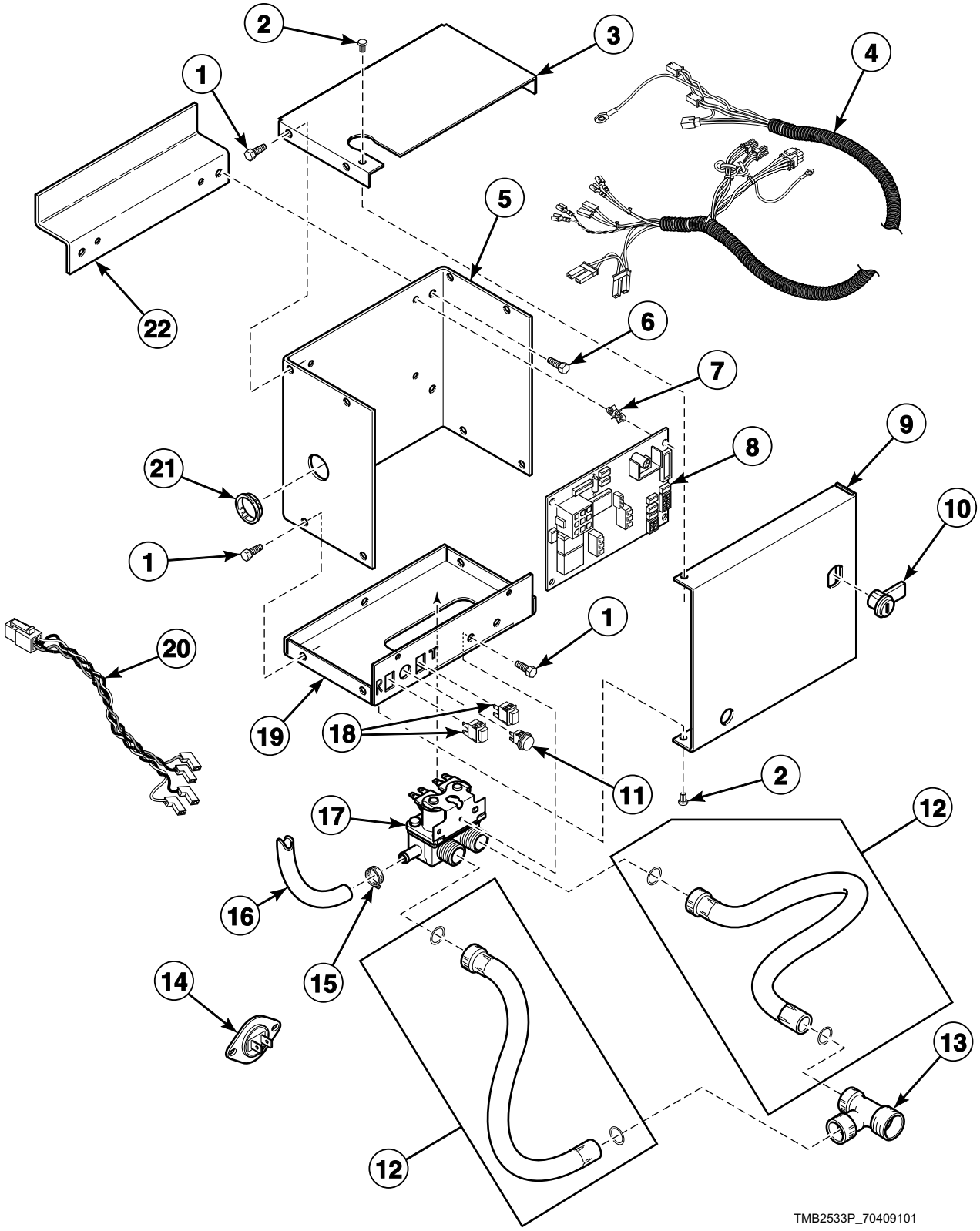

© Copyright, Alliance Laundry Systems LLC – DO NOT COPY or TRANSMIT

Fire Suppression System Control Box

REF	PART NO.	DESCRIPTION	COMMENTS
1	430497	Screw	
2	M400713	Drive Rivet	
3	44065401	Control Box Top	
4	44076901P	Control Harness	
5	44065101	Control Box Housing	
6	51780	Screw	
7	D501523	Circuit Board Support	4 required
8	44063801P	Control	
9	44065201	Control Box Cover	
10	70733701	Lock, Key and Nut Kit	RL001 key code; Optional if same key is to be used for control lock
	70155601	Key	RL001
11	801432	Light	
12	F200116	Fill Hose	2 required
13	44069101	Hose Fitting	
14	44064701	Thermistor	2 required
15	36801	Hose Clamp	
16	44073301	Hose	39 inches; Outlet hose
17	36958P	Mixing Valve	
18	801434W	Push-to-Start Switch	2 required
19	44065301	Control Box Base	
20	44068701	Sensor Harness Assembly	
21	70178701	Snap Bushing	
22	44065901	Bracket	For mounting fire suppression system box to machine

© Copyright, Alliance Laundry Systems LLC – DO NOT COPY or TRANSMIT

Electromechanical Coin Drop

C, H, P and S Models Except Models HT050D and ST050D and Thermal Oil Models
Models with CD, CX and CY Control Suffixes

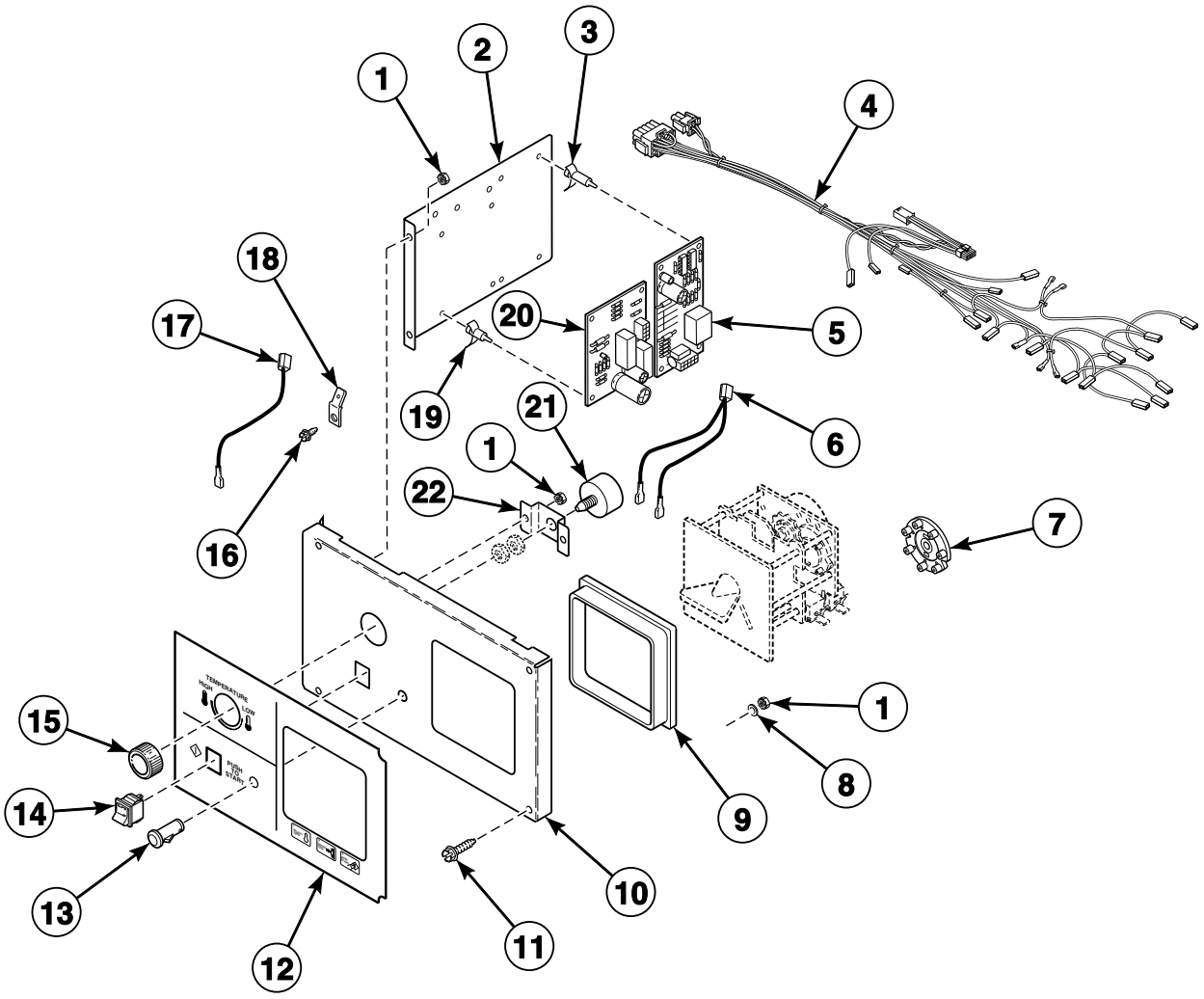

TMB2534P_70409101

© Copyright, Alliance Laundry Systems LLC – DO NOT COPY or TRANSMIT

Electromechanical Coin Drop

REF	PART NO.	DESCRIPTION	COMMENTS
1	70054	Nut	7 required
2	44018601	Temperature Control Bracket	
3	34896	Circuit Board Support	4 required
4	44005501P	Control Panel Harness	Non-CE models
	44006601	Control Panel Harness	CE electric models
	44025801	Control Panel Harness	CE gas and steam models
5	431347P	Thermostat Module	
6	70084104P	Calibration Jumper	
7	M409532	Cam Package	Timing cams; Includes 9 cams
8	M405535	Washer	3 required
9	70061701	Rotary Drop Shroud	
10	70175804	Control Plate Assembly	
11	70069901	Screw	2 required
12	70113501	Overlay	C and S models; Text and icon
	70131001	Overlay	S models; Icon
	70114301	Overlay	H models; Text and icon
	70134801	Overlay	H models; Icon
	70183501	Overlay	P models; Text and icon
13	70082201	Indicator Light	
14	70108501	Start Switch	
15	44020501	Knob	P and S models; Temperature
	44020502	Knob	H models; Temperature
	44020503	Temperature Knob	C models; Temperature
16	430497	Screw	
17	M412645	Jumper Wire Assembly	Ground wire
18	00177	Male Tab Terminal	
19	70178801	Circuit Board Support	4 required
20	70175301P	Timer Control Assembly	
21	70475001P	Temperature Kit	Potentiometer
22	70080701	Mounting Bracket	

© Copyright, Alliance Laundry Systems LLC – DO NOT COPY or TRANSMIT

Coin Meter

C, H, P and S Models Except Models HT050D and ST050D and Thermal Oil Models
Models with CD, CX and CY Control Suffixes

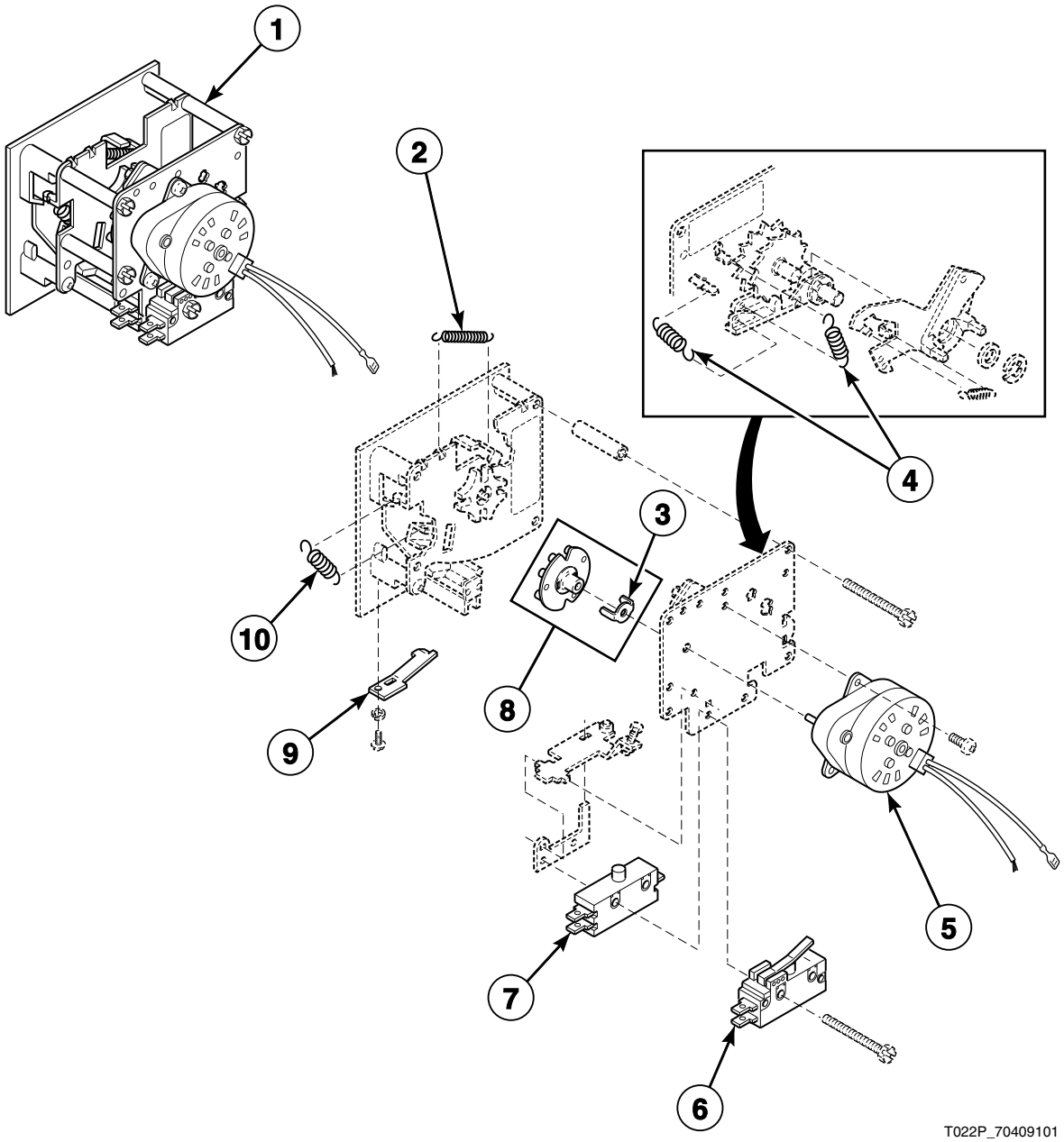

© Copyright, Alliance Laundry Systems LLC – DO NOT COPY or TRANSMIT

Coin Meter

REF	PART NO.	DESCRIPTION	COMMENTS
1	N/A	Coin Meter	Australia; .20/5 minutes; CD control suffix
	70112501P	Coin Meter	Australia; 1.00/15 minutes; CD control suffix
	70112701P	Coin Meter	USA; $.25/10 minutes; CD control suffix
	70137301P	Coin Meter	Standard; 118-1; 60 Hertz; CD control suffix
	70137401P	Coin Meter	Standard; 118-5; 60 Hertz; CD control suffix
	70151301	Coin Meter	South Africa; .20/10 minutes; CD control suffix
	N/A	Coin Meter	England; 20 pence; CD control suffix
	N/A	Coin Meter	Denmark; 1 krone; CD control suffix
	M412546	Coin Meter	Standard; 118-1; 50 Hertz; CD control suffix
	N/A	Coin Meter	Standard; 118-5/10; 50 Hertz; CD control suffix
	70262401	Coin Meter	Euro; .20; CD control suffix
	N/A	Coin Meter	Euro; .50; CD control suffix
2	M405138B	Return Spring	
3	M400754	Coin Meter Drive	
4	M402455	Coil Spring	
5	70218201	Timer Motor	60 Hertz
	70218301	Timer Motor	50 Hertz
6	M400947	Switch	Heat; Switch “B”
7	N/A	Single Throw Switch	Run; Switch “A”
8	M400732P	Timing Cam	10 pin; 6 minute
	M400733P	Timing Cam	12 pin; 5 minute
	M400734P	Timing Cam	2 pin; 30 minute
	M400735P	Timing Cam	3 pin; 20 minute
	M400736P	Timing Cam	4 pin; 15 minute
	M400737P	Timing Cam	5 pin; 12 minute
	M400738P	Timing Cam	6 pin; 10 minute
	M400739P	Timing Cam	7 pin; 8.5 minute
	M400740P	Timing Cam	8 pin; 7.5 minute
	M400741P	Timing Cam	9 pin; 6.6 minute
9	M406297	Coin Retainer Spring	
10	M405138A	Coin Carrier Spring	

N/A = Part no longer available

© Copyright, Alliance Laundry Systems LLC – DO NOT COPY or TRANSMIT

Single Drop Controls

C, H, I and S Models Except Models HT050D and ST050D
Models with SD and SX Control Suffixes

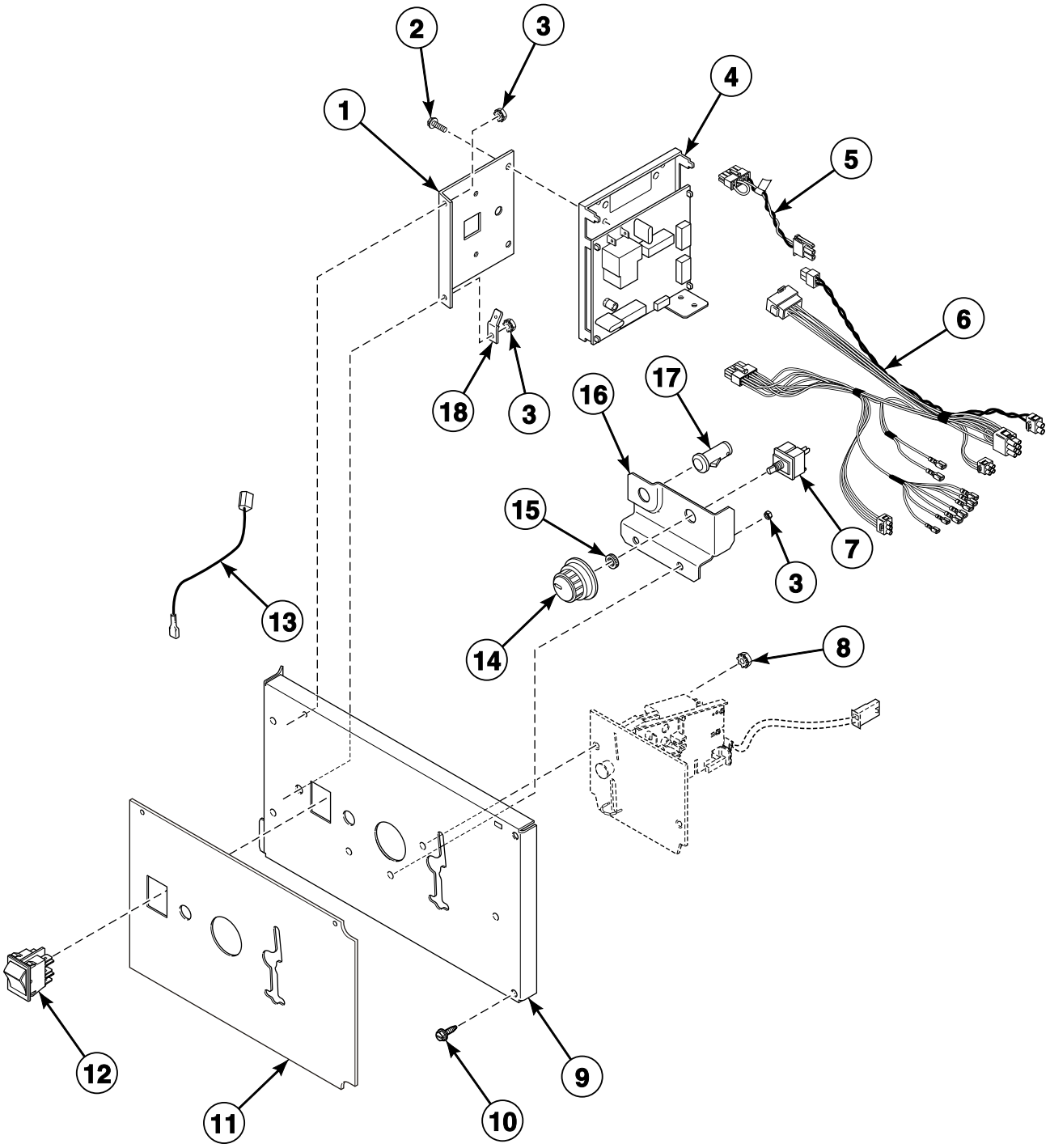

TMB2391P_70409101

© Copyright, Alliance Laundry Systems LLC – DO NOT COPY or TRANSMIT

Single Drop Controls

REF	PART NO.	DESCRIPTION	COMMENTS
1	70357901	Control Chassis Mounting Bracket	
2	D501524	Screw	
3	70054	Nut	
4	D513139P	Control Assembly	
5	70324604	Jumper Calibration Wire	
6	44099901P	Control Panel Harness	Non-CE models
	44100201P	Control Panel Harness	CE models
7	D511711	Temperature Selector Switch	
8	29786	Nut	
9	70363401	Control Door Assembly	
10	70069901	Screw	
11	70362901	Overlay	C, I and S models
	70363001	Overlay	H models
12	70455101	Rocker Switch	Start switch
13	M412645	Jumper Wire Assembly	
14	44104601	Temperature Knob	
15	24205	Nut	
16	70350201	Temperature Selector Bracket	
17	801431	Light	
18	00177	Male Tab Terminal	

© Copyright, Alliance Laundry Systems LLC – DO NOT COPY or TRANSMIT

Manual Dual Timer Controls (Drawing 1 of 2)

B, C, H, P, S, U and Y Models Except Models BT050D, HT050D and ST050D;
GT and GU Models Through Serial No. 0110002231
Models with MT and RT Control Suffixes

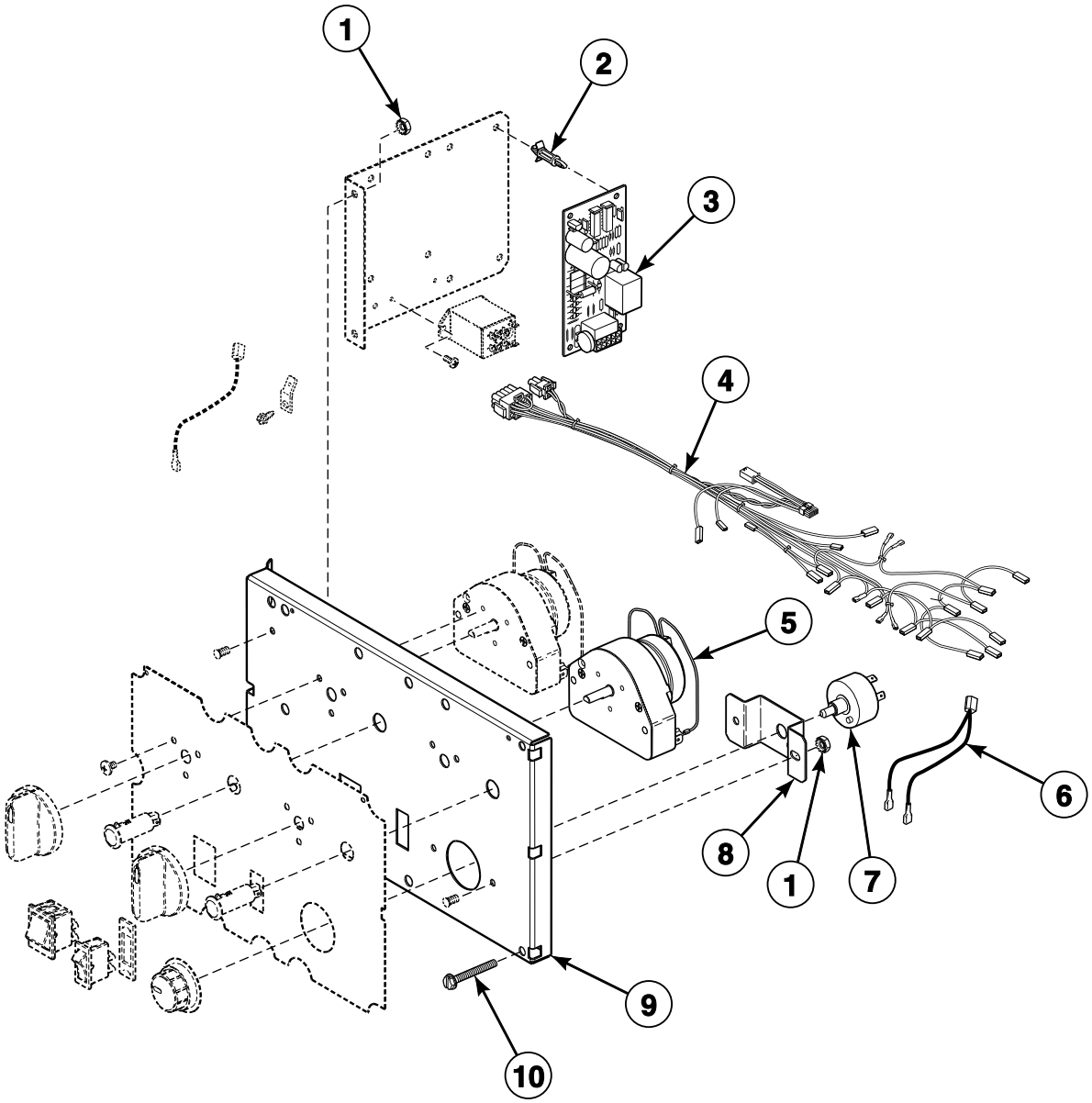

TMB1290P_70409101

© Copyright, Alliance Laundry Systems LLC – DO NOT COPY or TRANSMIT

Manual Dual Timer Controls (Drawing 1 of 2)

REF	PART NO.	DESCRIPTION	COMMENTS
	M4799P3	Control Conversion Kit	B and C non-CE electric and gas models with MT control suffix
1	70054	Nut	4 required
2	34896	Circuit Board Support	4 required
3	431347P	Thermostat Module	
4	44005601P	Control Panel Harness	Non-CE models; Nonreversing
	44005701P	Control Panel Harness	Non-CE models; Reversing
	44006701	Control Panel Harness	CE electric models; Nonreversing
	44006801	Control Panel Harness	CE electric models; Reversing
	44025601	Control Panel Harness	CE gas and steam models; Nonreversing
	44025701	Control Panel Harness	CE gas and steam models; Reversing
5	70131701P	Timer	Heat; 50 and 60 Hertz
6	70084104P	Calibration Jumper	
7	70475001P	Temperature Kit	Potentiometer; 10-25000 ohms resistance
8	70080701	Mounting Bracket	
9	70175803	Control Plate Assembly	Includes self-clinching studs
10	70069901	Screw	2 required

© Copyright, Alliance Laundry Systems LLC – DO NOT COPY or TRANSMIT

Manual Dual Timer Controls (Drawing 2 of 2)

B, C, H, P, S, U and Y Models Except Models BT050D, HT050D and ST050D;
GT and GU Models Through Serial No. 0110002231
Models with MT and RT Control Suffixes

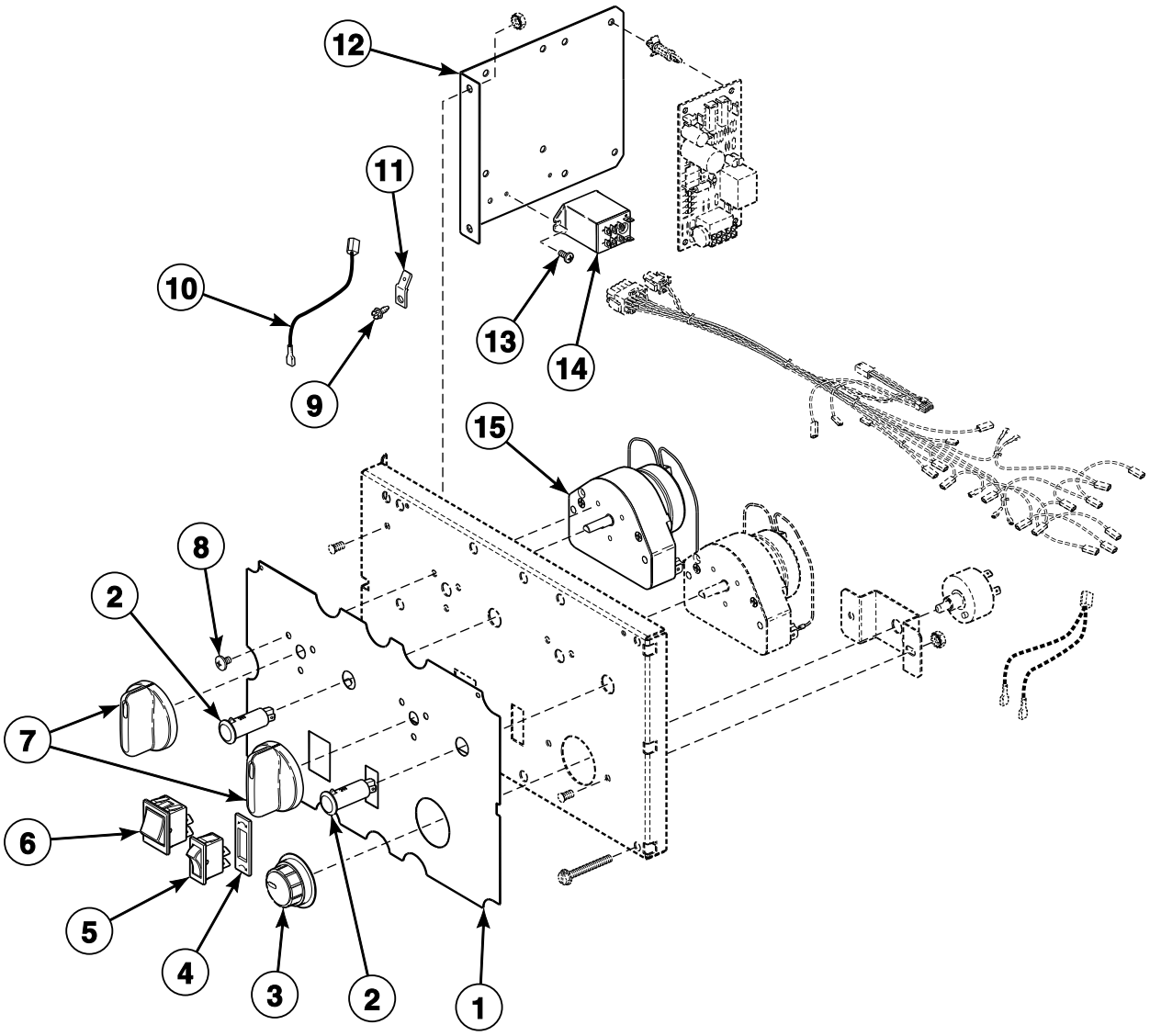

TMB1537P_70409101

© Copyright, Alliance Laundry Systems LLC – DO NOT COPY or TRANSMIT

Manual Dual Timer Controls (Drawing 2 of 2)

REF	PART NO.	DESCRIPTION	COMMENTS
1	70114501	Overlay	B, C, S, U and Y models; Nonreversing
	70114502	Overlay	B, C, S, U and Y models; Reversing
	N/A	Overlay	G models; Nonreversing
	70129202	Overlay	G models; Reversing
	70245901	Overlay	P models; Nonreversing
	N/A	Overlay	P models; Reversing
	70246001	Overlay	H models; Nonreversing
	N/A	Overlay	H models; Reversing
	70246101	Overlay	H models; Nonreversing; Icon
	N/A	Overlay	H models; Reversing; Icon
	70134901	Overlay	S and U models; Nonreversing; Icon
	N/A	Overlay	S and U models; Reversing; Icon
2	70082201	Indicator Light	
3	44020501	Knob	P, S, U and Y models; Temperature
	44020502	Knob	G and H models; Temperature
	44020503	Temperature Knob	B and C models; Temperature
4	M413236	Switch Plate	Reversing
5	M413270	Rocker Switch	Reversing
6	70108501	Start Switch	Push to start
7	70082101	Timer Knob	P, S, U and Y models
	M410927	Knob	G and H models
	M400773	Knob	B and C models
8	M411052	Screw	3 required per timer
9	430497	Screw	
10	M412645	Jumper Wire Assembly	Ground wire
11	00177	Male Tab Terminal	
12	44018601	Temperature Control Bracket	
13	M402797	Screw	Non-CE models; 2 required
14	M412534	Relay	Non-CE models
15	70131801P	Timer	Cooling; 60 Hertz; 15 minute
	M412079P	Timer	Cooling; 50 Hertz; 15 minute

N/A = Part no longer available

© Copyright, Alliance Laundry Systems LLC – DO NOT COPY or TRANSMIT

Dual Digital Timer Controls

C, H, I, S, U and Y Models
Models with QT and RQ Control Suffixes

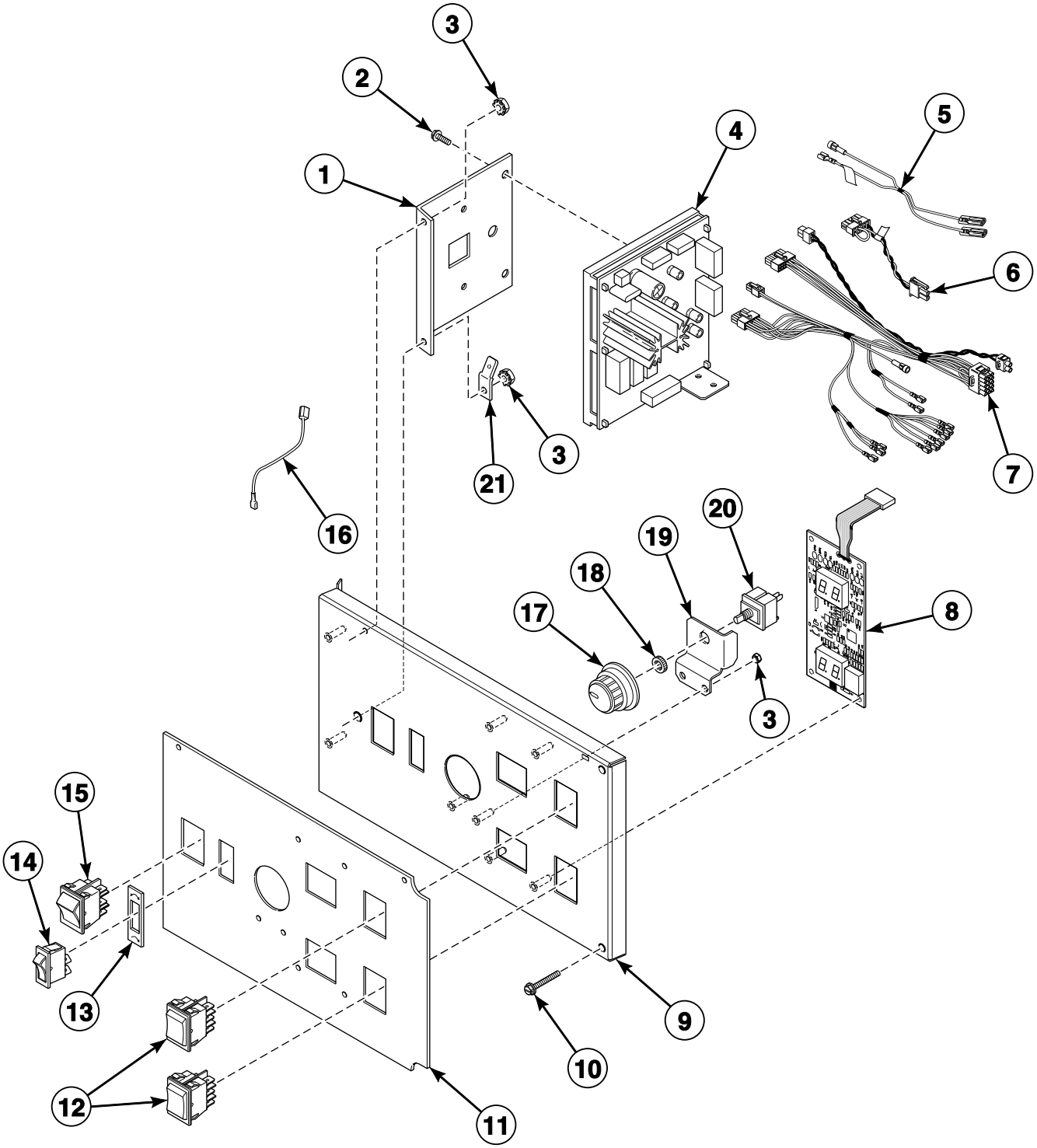

TMB2390P_70409101

© Copyright, Alliance Laundry Systems LLC – DO NOT COPY or TRANSMIT

Dual Digital Timer Controls

REF	PART NO.	DESCRIPTION	COMMENTS
1	70357901	Control Chassis Mounting Bracket	
2	D501524	Screw	
3	70054	Nut	
4	D512202P	Control Assembly	
5	44100101P	Control Harness	Reversing; Use in addition to item 7
6	70324604	Jumper Calibration Wire	
7	44100001P	Control Harness	Non-CE models
	44100301P	Control Panel Harness	CE models
8	D512218P	Display Assembly	
9	70360601	Control Plate Assembly	
10	70069901	Screw	
11	70362201	Overlay	C, I, S, U and Y models; Nonreversing
	70362202	Overlay	C, I, S, U and Y models; Reversing
	70362501	Overlay	H models; Nonreversing
	70362502	Overlay	H models; Reversing
12	70461301	Rocker Switch	
13	M413236	Switch Plate	Reversing
14	44099601	Rocker Switch	Reversing
15	70455101	Rocker Switch	Start switch
16	M412645	Jumper Wire Assembly	Ground wire
17	44104601	Temperature Knob	
18	24205	Nut	
19	70391701	Temperature Selector Switch Bracket	
20	D511711	Temperature Selector Switch	
21	00177	Male Tab Terminal	

© Copyright, Alliance Laundry Systems LLC – DO NOT COPY or TRANSMIT

DMP Control

C and I Models
Models with DO, DV, DX and RD Control Suffixes

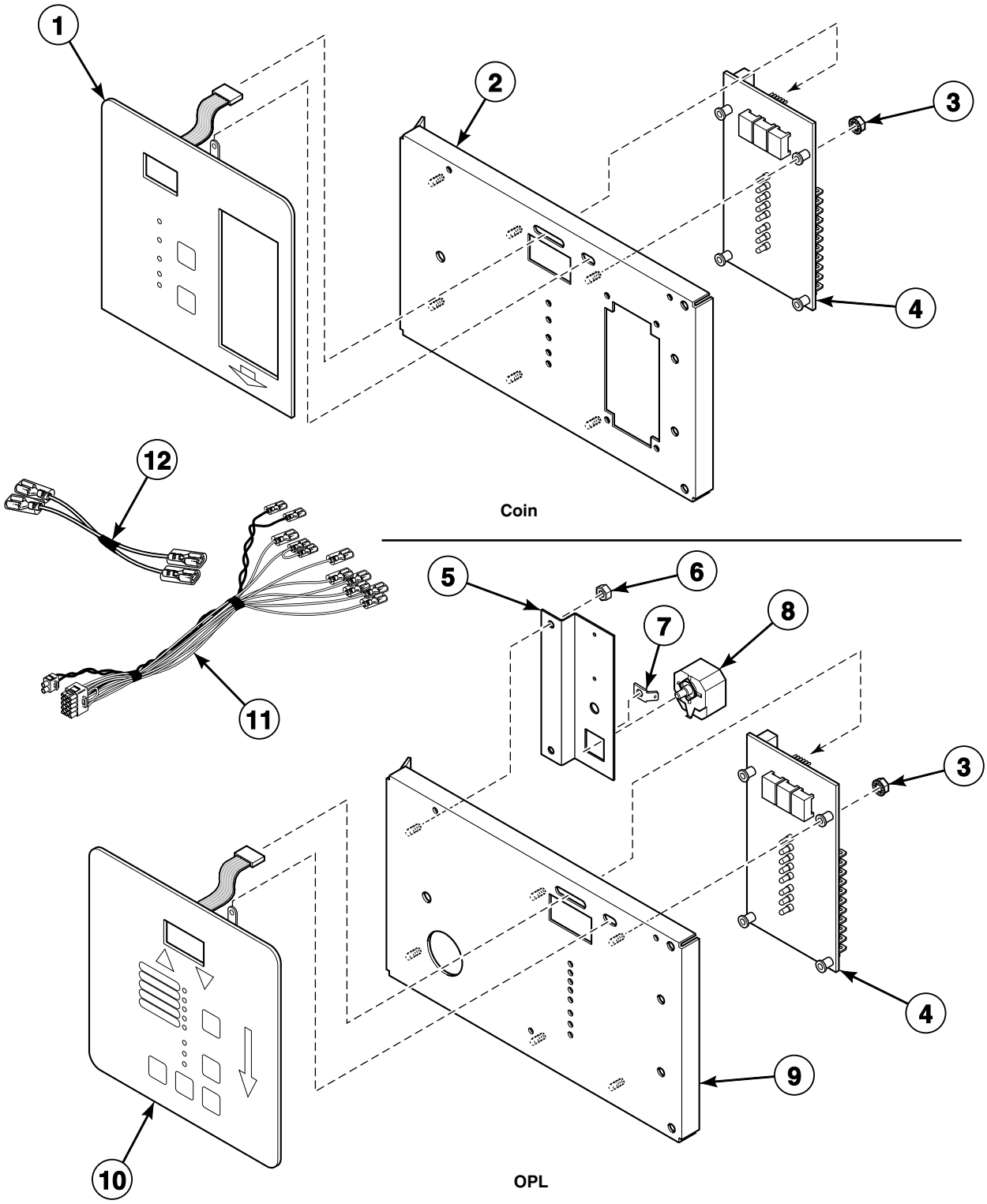

TMB2547P_70409101

© Copyright, Alliance Laundry Systems LLC – DO NOT COPY or TRANSMIT

DMP Control

REF	PART NO.	DESCRIPTION	COMMENTS
	M4797P3	Control Conversion Kit	C models; DV and DX control suffixes
1	44039402P	Membrane Switch	Coin
2	44041001	Control Plate Assembly	Coin; Includes studs
3	29787	Nut	
4	44037801P	Electronic Control	
5	44041701	Relay/Buzzer Bracket	
6	70054	Nut	
7	00177	Male Tab Terminal	
8	D505447	Adjustable Buzzer	
9	44040901	Control Plate Assembly	OPL; Includes studs
10	44037901P	Membrane Switch	OPL
11	44040301	Control Panel Harness Assembly	Non-CE models; Nonreversing
	44042601	Control Panel Harness	Non-CE models; Reversing
	44043201P	Control Panel Harness	CE models; Coin
12	44042701	Jumper Set Assembly	Coin; Use in addition to 44040301 Control Panel Harness Assembly or 44042601 Control Panel Harness
	44042801	Jumper Set Assembly	OPL; Buzzer; Use in addition to 44040301 Control Panel Harness Assembly or 44042601 Control Panel Harness

© Copyright, Alliance Laundry Systems LLC – DO NOT COPY or TRANSMIT

DX4 Electronic Control

B and I Models
Models with 3O, 3V, 3X and R3 Control Suffixes

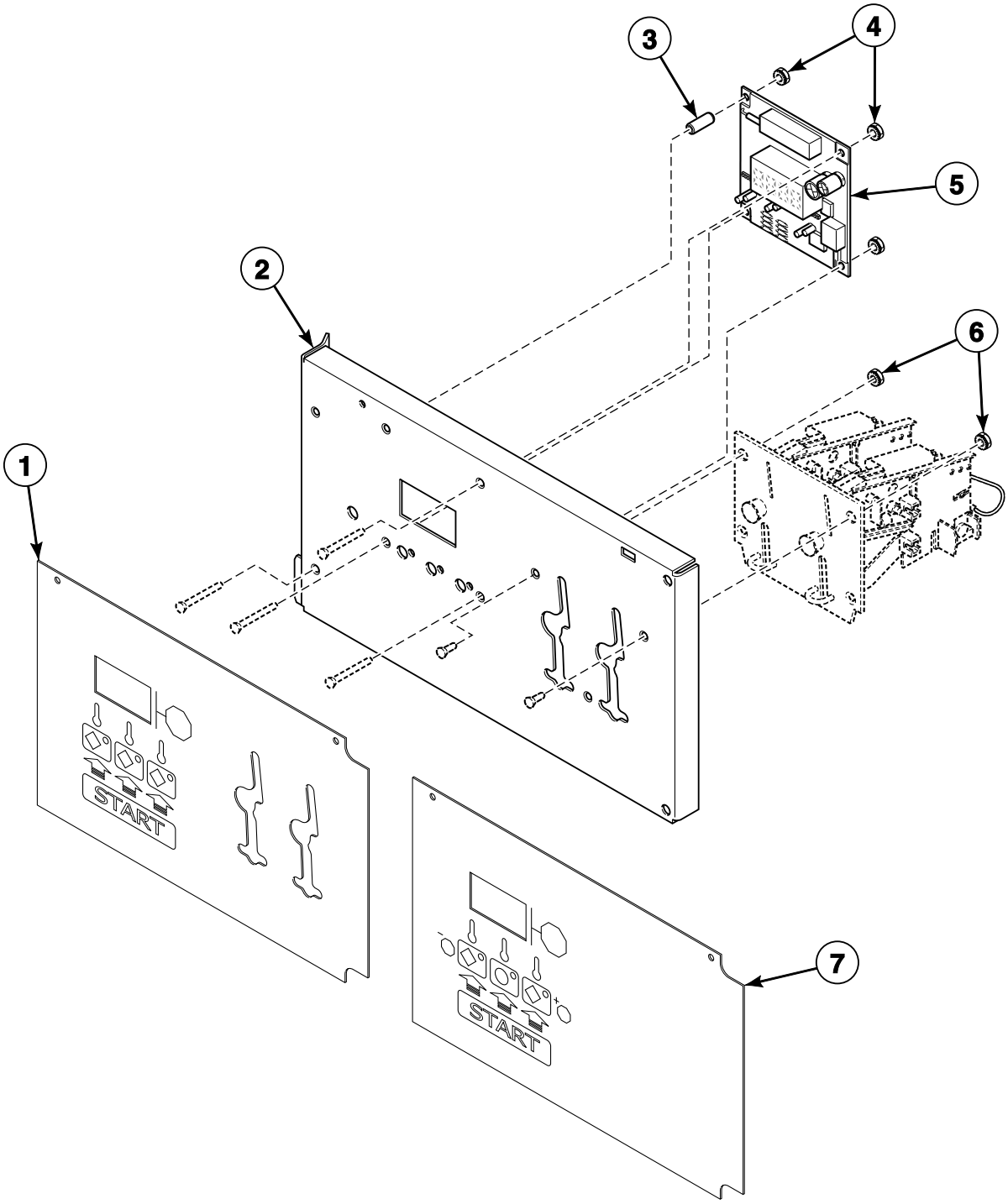

TMB2400P_70409101

© Copyright, Alliance Laundry Systems LLC – DO NOT COPY or TRANSMIT

DX4 Electronic Control

REF	PART NO.	DESCRIPTION	COMMENTS
	44051401	Control Panel Harness	CE models; Models through 7/10/2005
	N/A	Control Panel Harness	CE models; Models starting 7/11/2005
	44052601	Control Panel Harness	Non-CE models; Models through 7/10/2005
	44098601	Control Panel Harness	Non-CE models; Models starting 7/11/2005
1	44050502	Graphic Overlay	Dual; Coin (shown)
	44050501	Graphic Overlay	Single; Coin
	259/00005/00	Overlay	PRO HC control replacement; Refer to Parts Information Insert 8-18-251 for list of machine serial numbers
2	44050701P	Control Plate Kit	Includes studs
3	44050601	Sleeve	4 required
4	29787	Nut	
5	70462305P	Control Assembly	3O control suffix
	70462306P	Control Assembly	R3 control suffix
	70462365P	Control Assembly	3V and 3X control suffixes
	254/00070/00P	Control Board	PRO HC control replacement; Refer to Parts Information Insert 8-18-251 for list of machine serial numbers
6	29786	Nut	2 required
7	44240501	Graphic Overlay	OPL

N/A = Part no longer available

© Copyright, Alliance Laundry Systems LLC – DO NOT COPY or TRANSMIT

OPL Microprocessor Controls

G, H, K, L, P, S and U Models
Models with OM and RM Control Suffixes

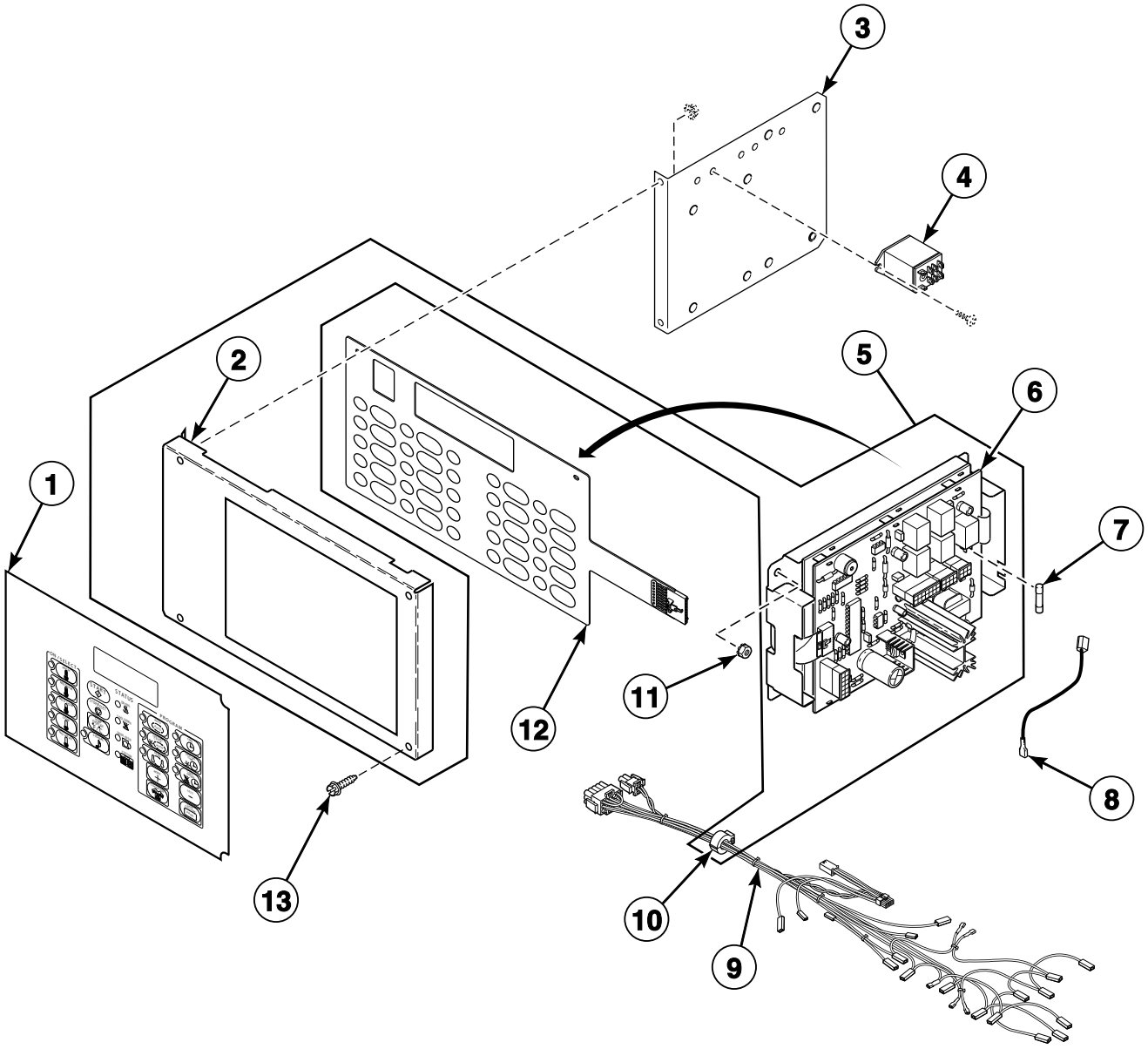

TMB3267P_70409101

© Copyright, Alliance Laundry Systems LLC – DO NOT COPY or TRANSMIT

OPL Microprocessor Controls

REF	PART NO.	DESCRIPTION	COMMENTS
1	70115801	Overlay	L, S and U models; Nonreversing; Text and icon
	70128401	Overlay	L, S and U models; Reversing; Text and icon
	70128701	Overlay	H models; Nonreversing; Text and icon
	70128601	Overlay	H models; Reversing; Text and icon
	70130301	Overlay	P models; Nonreversing; Text and icon
	70135301	Overlay	P models; Reversing; Text and icon
	44130002	Overlay	G models starting Serial No. 0707008006; K models; Nonreversing; Text and icon
	44130001	Overlay	G models starting Serial No. 0707008006; K models; Reversing; Text and icon
	70130401	Overlay	GT and GU models through Serial No. 0110002231; S and U models; Nonreversing; Icon
	70130501	Overlay	GT and GU models through Serial No. 0110002231; S and U models; Reversing; Icon
	70130601	Overlay	H models; Nonreversing; Icon
	70130701	Overlay	H models; Reversing; Icon
2	70175805	Control Plate Assembly	
3	44018601	Temperature Control Bracket	
4	M412534	Relay	
5	44013601P	Control Assembly	Does not include overlay or control panel harness
6	70228401P	Control Kit	With tape
7	70406501	Fuse	
8	M412645	Jumper Wire Assembly	Ground wire
9	44016701P	Control Panel Harness	Non-CE models; Nonreversing
	44016702	Control Panel Harness	Non-CE models; Reversing
	44017001	Control Panel Harness	CE models; Nonreversing
	44017002	Control Panel Harness	CE models; Reversing
10	M413930P	Ferrite Core Assembly	
11	70054	Nut	4 required
12	M414368P	Membrane Switch	
13	70069901	Screw	2 required

© Copyright, Alliance Laundry Systems LLC – DO NOT COPY or TRANSMIT

Coin Drop Components for MDC Models

G, H, L, P and S Models
Models with BC, BL and BX Control Suffixes

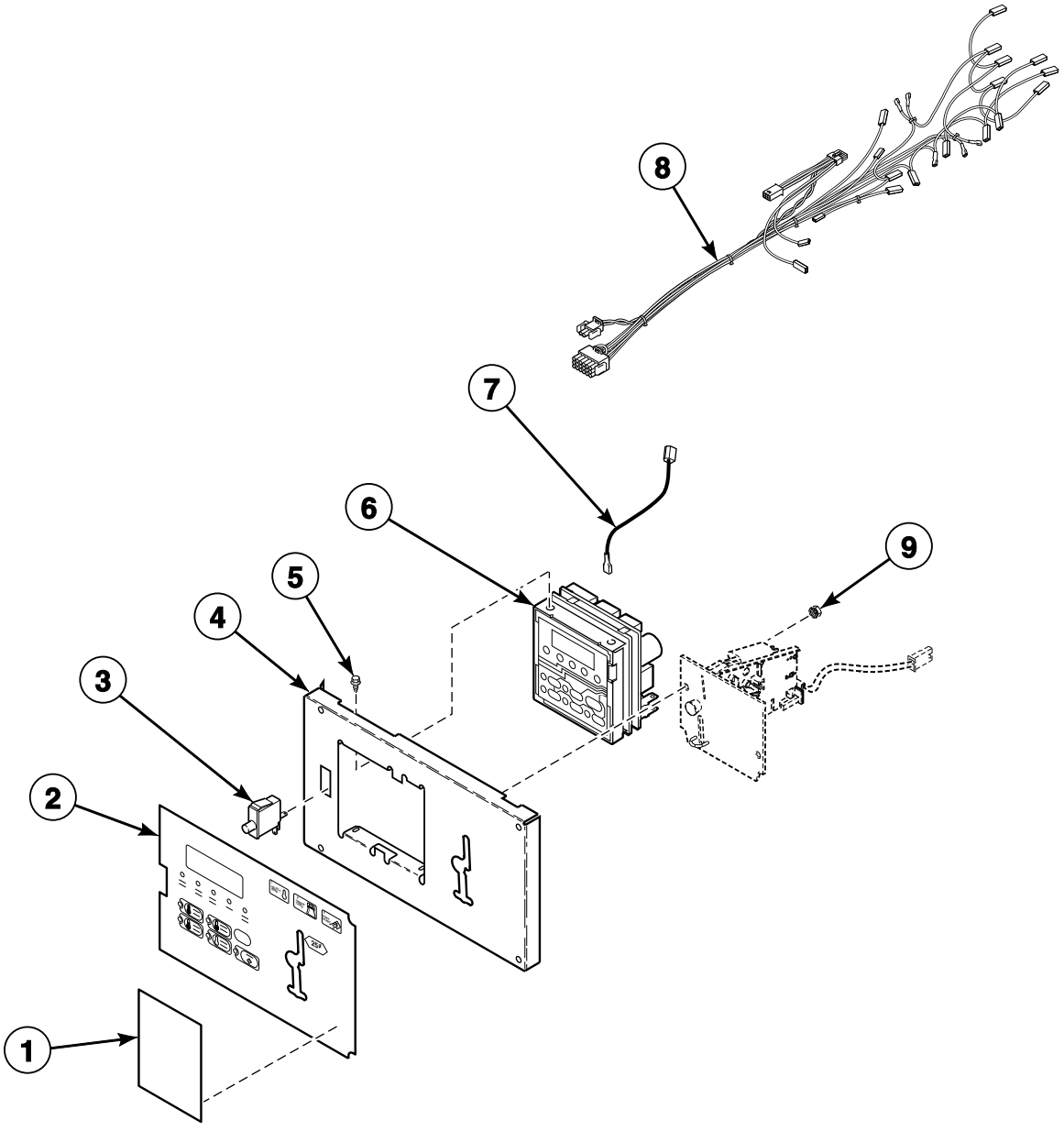

TMB2548P_70409101

© Copyright, Alliance Laundry Systems LLC – DO NOT COPY or TRANSMIT

Coin Drop Components for MDC Models

REF	PART NO.	DESCRIPTION	COMMENTS
1	39564	Nameplate	S models with BL** control suffix; Cover
	70246301	Coin Cover Overlay	L models with BL** control suffix; Cover
	70286701	Overlay	P models with BL** control suffix; Cover
	70275401	Overlay	H models with BL** control suffix; Cover
2	70257701	Overlay	L and S models with BC, BL** and BX control suffixes; Text; Single drop
	70129501	Overlay	P models with BC* and BX* control suffixes; Single drop
	70129601	Overlay	P models with BC* and BX* control suffixes; Dual drop
	70321001	Overlay	P models with BC* and BX* control suffixes; World drop
	70259001	Overlay	P models with BC* and BX* control suffixes
	70261001	Overlay	L and S models with BC, BL** and BX control suffixes; Icon; Single drop
	70257702	Overlay	L and S models with BC and BX control suffixes; Dual drop
	70261002	Overlay	L and S models with BC and BX control suffixes; Dual drop
	70258001	Overlay	H models with BC, BL** and BX control suffixes; Text; Single drop
	70261201	Overlay	H models with BC, BL** and BX control suffixes; Icon; Single drop
	70258002	Overlay	H models with BC and BX control suffixes; Dual drop
	70261202	Overlay	H models with BC and BX control suffixes; Icon; Dual drop
	70411701	Overlay	G models with BC and BX control suffixes; Text; Single drop
	70411702	Overlay	G models with BC and BX control suffixes; Text; Dual drop
3	70413301	Pushbutton Switch	
4	70291001P	Control Plate Kit	
5	D501524	Screw	4 required for mounting control
6	D511867P	Control Assembly	
7	M412645	Jumper Wire Assembly	Ground wire
8	44010801P	Control Panel Harness	Non-CE models
	44010901	Control Panel Harness	CE models
9	29786	Nut	3 required

*** NOTE: P models with BC or BX control suffixes require an overlay and coin drop overlay.**

**** NOTE: BL control suffix requires an overlay and overlay cover specific to model.**

© Copyright, Alliance Laundry Systems LLC – DO NOT COPY or TRANSMIT

Central Pay and Card Reader MDC Models

G, H, K, L, N, P and S Models
Models with BG, BL, BU and BY Control Suffixes

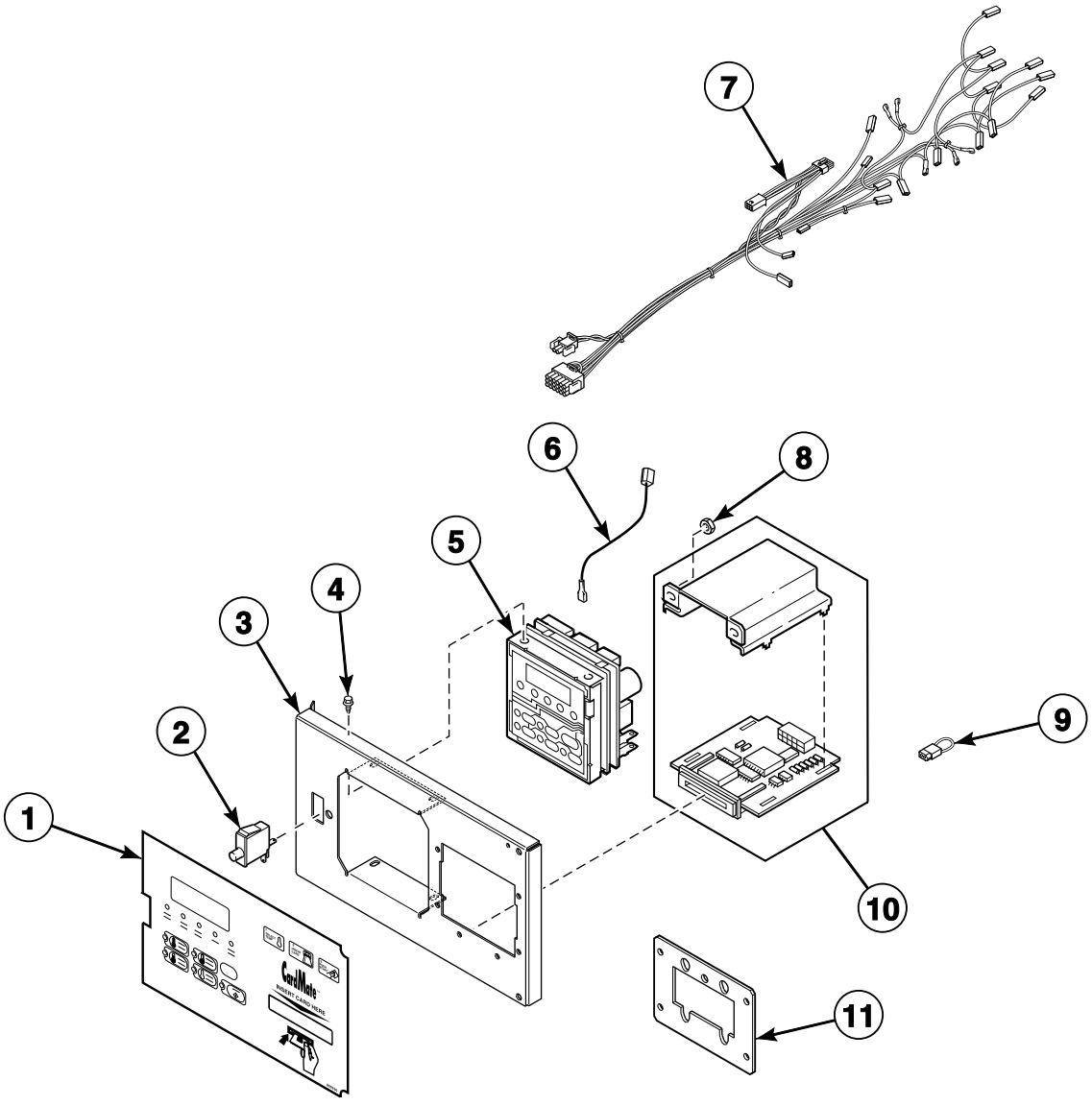

TMB2456P_70409101

© Copyright, Alliance Laundry Systems LLC – DO NOT COPY or TRANSMIT

Central Pay and Card Reader MDC Models

REF	PART NO.	DESCRIPTION	COMMENTS
1	70266701	Overlay	L and S models with BY control suffix; Text
	N/A	Overlay	L and S models with BY control suffix; Icon
	70257703	Overlay	L and S models except model ST050D with BU control suffix; Text
	70261003	Overlay	L and S models except model ST050D with BU control suffix; Icon
	70259001	Overlay	P models with BL* control suffix
	70266801	Overlay	H models with BY control suffix; Text
	70258003	Overlay	H models except model HT050D with BU control suffix; Text
	70411703	Overlay	G and K models with BG control suffix; Text
2	70413301	Pushbutton Switch	
3	N/A	Control Plate Assembly	BY control suffix
	70497201	Control Plate Assembly	H, N, P and S models except models HT050D and ST050D with BU control suffix
	70291001P	Control Plate Kit	H, L, P and S models with BL control suffix
4	D501524	Screw	
5	D511867P	Control Assembly	
6	M412645	Jumper Wire Assembly	Ground wire
7	44010801P	Control Panel Harness	Non-CE models
	44010901	Control Panel Harness	CE models
8	70054	Nut	
9	N/A	Bypass Jumper Wire	
10	D510068P	Card Reader and Bracket Assembly	
11	70208801	Mounting Plate	H, N, P and S models except models HT050D and ST050D with BU control suffix

N/A = Part no longer available

*** NOTE: BL control suffix requires an overlay and overlay cover specific to model.**

© Copyright, Alliance Laundry Systems LLC – DO NOT COPY or TRANSMIT

Optional Card Reader Mountings for MDC Models

H, L, N, P and S Models Starting Serial No. 0408000120
Models with BY Control Suffix

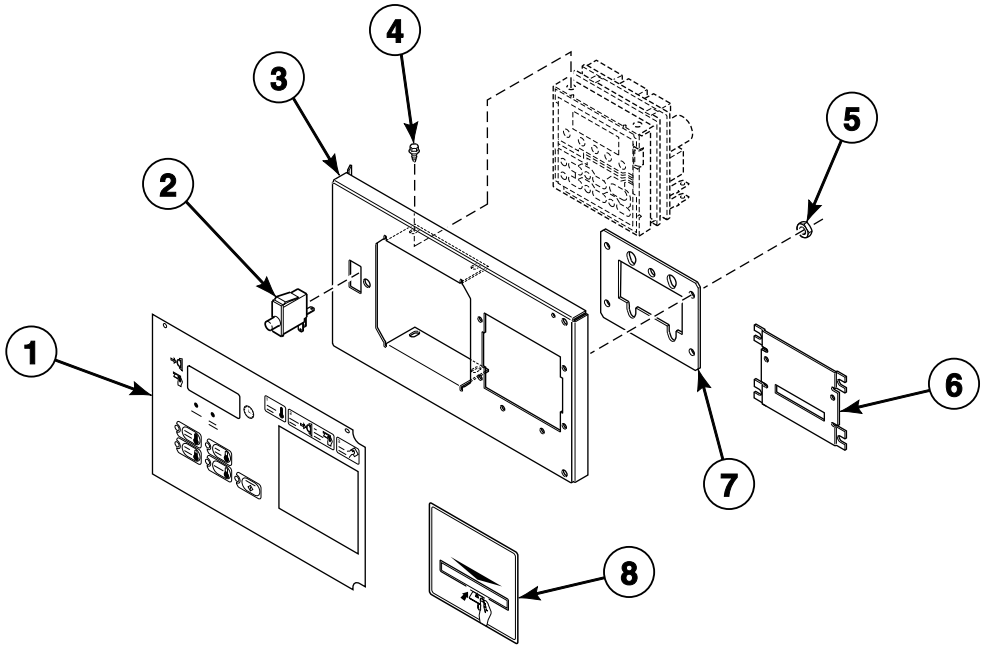

TMB1827B_70409101

© Copyright, Alliance Laundry Systems LLC – DO NOT COPY or TRANSMIT

Optional Card Reader Mountings for MDC Models

REF	PART NO.	DESCRIPTION	COMMENTS
1	70257703	Overlay	S models; Text and icon
	70258003	Overlay	H models; Text and icon
	70304401	Overlay	N models; Text and icon
2	70413301	Pushbutton Switch	
3	70497201	Control Plate Assembly	
4	D501524	Screw	4 required
5	70054	Nut	4 required
6	44089501	Slot Card Plate Assembly	Included in literature packet
7	70208801	Mounting Plate	
8	70334201	Card Reader Overlay	Black; Included in literature packet
	70334301	Card Reader Overlay	Gray; Included in literature packet

© Copyright, Alliance Laundry Systems LLC – DO NOT COPY or TRANSMIT

Coin Drops

All Models Except U Models with All Control Suffixes Except CD, CX and CY

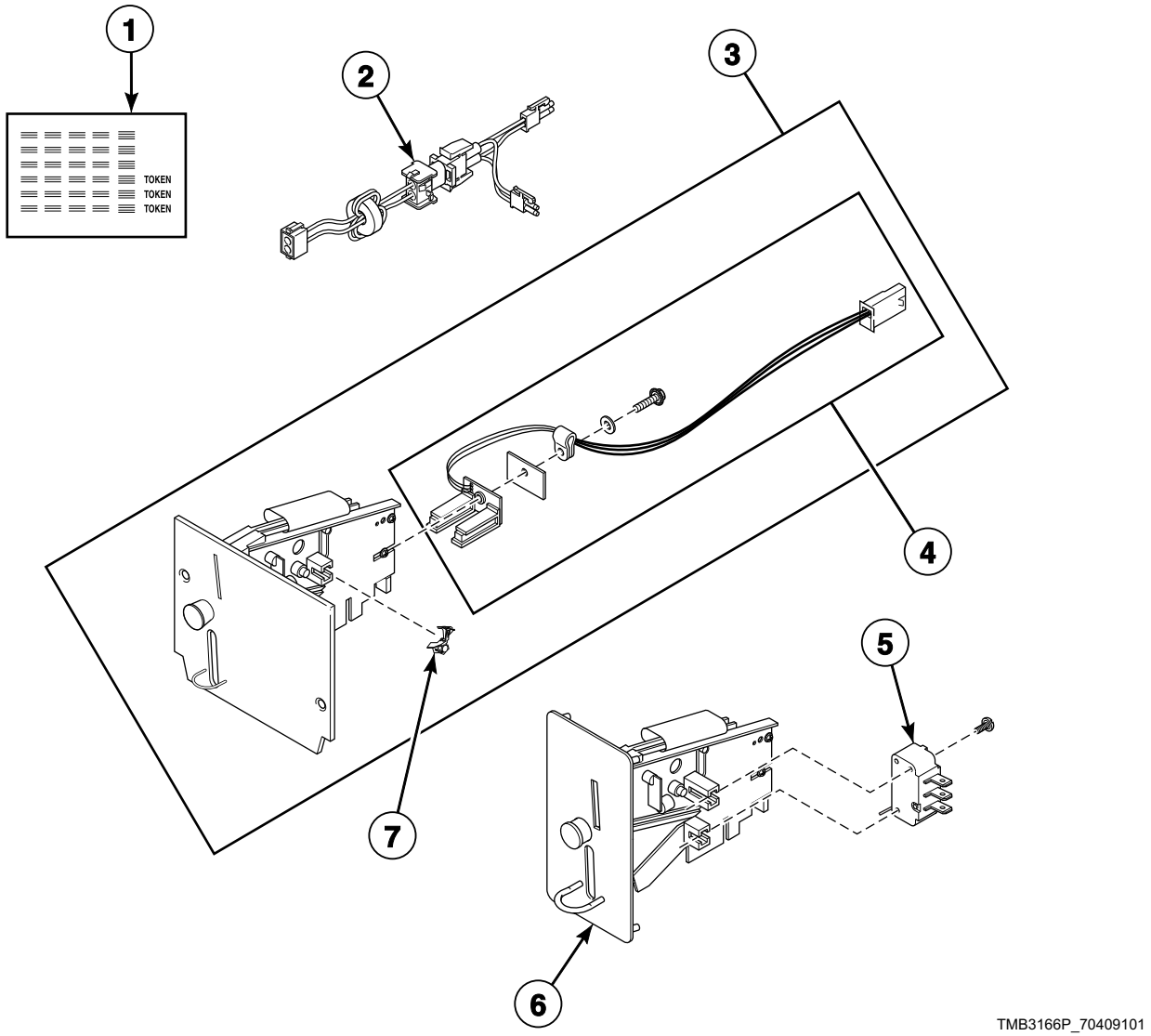

© Copyright, Alliance Laundry Systems LLC – DO NOT COPY or TRANSMIT

Coin Drops

REF	PART NO.	DESCRIPTION	COMMENTS
1	38725	Coin Identification Paper	
2	44065801	Electronic Coin Drop Harness	Included in CK502 Electronic Coin Drop Kit
3	70294103P	Electronic Coin Drop Assembly	United Kingdom (default) and Europe
	70294104	Electronic Coin Drop Assembly	Euro (default), Denmark and Norway
	CK099	Electronic Coin Drop Kit	Australian (default), New Zealand, Hong Kong, South Korea and Malaysia
	70513306	Electronic Coin Drop Assembly	Mexico (default), Ecuador and USA dollar
	70513311	Electronic Coin Drop Assembly	Malaysia (default), China, Russia and Singapore
	70294107	Electronic Coin Drop Assembly	Lithuania (default), Latvia and Europe
	70441601P	Coin Drop	USA; $.25; Single
	70256402P	Coin Drop	USA; $.25 and $1.00; Dual
	70429001	Coin Drop	B models; USA
	38475	Coin Drop Assembly	Japan; 100 yen
	38519	Coin Drop Assembly	Japan; 100 and 500 yen
	38467	Coin Drop Assembly	Australia; .20 and 1.00
	CK097	Coin Drop Kit	Token; Jeton; CE models
	210195	Coin Drop Assembly	Euro; .20 and 1.00
	210196	Coin Drop Assembly	Euro; .50 and 1.00
	70283102	Coin Drop Assembly	Euro; .20 and .50
	70294111	Electronic Coin Drop Assembly	Euro; .10, .20, .50, 1.00 and 2.00
	38462P	Coin Drop Assembly	Token; 118-1
	38463	Coin Drop Assembly	Token; 118-5
	38464P	Coin Drop Assembly	Canada; .25
	70441602	Coin Drop Assembly	Canada; .25 and 1.00
	38472	Coin Drop Assembly	England; 20 pence and 1 pound
	38521	Coin Drop Assembly	Korea; 100 and 500 won
	N/A	Coin Drop Assembly	New Zealand; .20 and 1.00
	38963P	Coin Drop	Token 118-16 not available; Replacement for 38963P Coin Drop only
	39157	Coin Drop Assembly	Israel; Shekel
	CK077	Coin Drop Kit	Taiwan; 10 NT
	70281102	Coin Drop Assembly	Taiwan; Dual drop
	N/A	Coin Drop Assembly	5 and 10 krone
4	200674P	Opto Coupler	
5	70286101P	Coin Drop Switch	B, C and I models
6	44039701P	Coin Drop Assembly	USA; $.25; DO, DV, DX and RD control suffixes
	44039702	Coin Drop Assembly	Mexico; 2 peso; DO, DV, DX and RD control suffixes
	44039703	Coin Drop Assembly	Token; .880; DO, DV, DX and RD control suffixes
	44039704	Coin Drop Assembly	Japan; 100 yen; DO, DV, DX and RD control suffixes
	44039705	Coin Drop Assembly	England; 20 pence; DO, DV, DX and RD control suffixes
	44039706	Coin Drop Assembly	Token; .800; DO, DV, DX and RD control suffixes
	44039707	Coin Drop Assembly	England; 50 pence; DO, DV, DX and RD control suffixes
7	201595P	Wire Guard	

N/A = Part no longer available

© Copyright, Alliance Laundry Systems LLC – DO NOT COPY or TRANSMIT

Coin Drop Kits

All Models Except U Models with All Control Suffixes Except CD, CX and CY

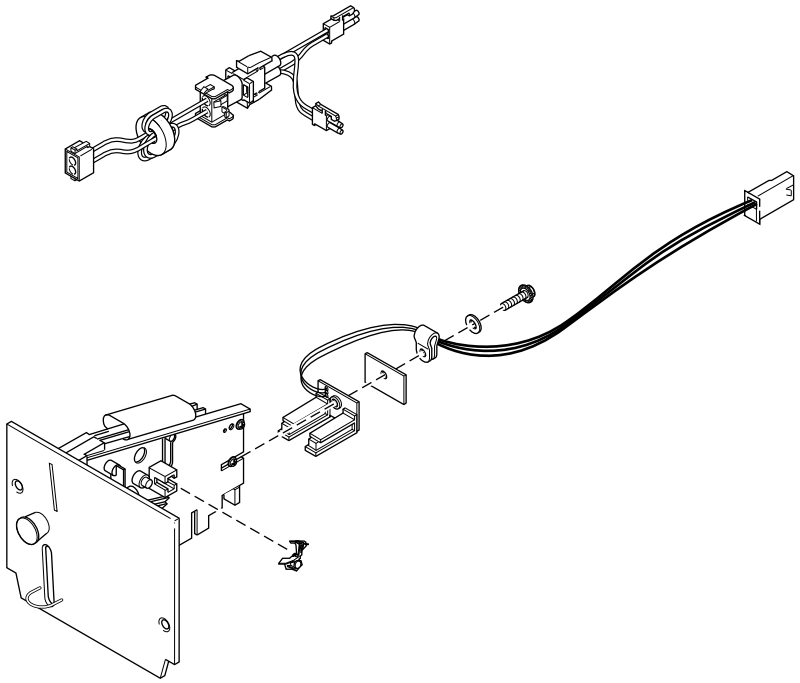

TMB2738PA_70409101

© Copyright, Alliance Laundry Systems LLC – DO NOT COPY or TRANSMIT

Coin Drop Kits

REF	PART NO.	DESCRIPTION	COMMENTS
	CK502	Electronic Coin Drop Kit	Includes 44065801 Electronic Coin Drop Harness and wiring diagram supplement
	CK115	Electronic Coin Drop Kit	USA and Canada; In addition to this kit, order CK502 Electronic Coin Drop Kit
	CK113	Electronic Coin Drop Kit	Japan and Taiwan; In addition to this kit, order CK502 Electronic Coin Drop Kit
	CK099	Electronic Coin Drop Kit	Australia (default), New Zealand, Hong Kong, South Korea and Malaysia; In addition to this kit, order CK502 Electronic Coin Drop Kit
	CK100	Electronic Coin Drop Kit	United Kingdom (default), and Europe; In addition to this kit, order CK502 Electronic Coin Drop Kit
	CK101	Electronic Coin Drop Kit	Euro (default), Denmark and Norway; In addition to this kit, order CK502 Electronic Coin Drop Kit
	CK103	Electronic Coin Drop Kit	Lithuania (default), Latvia and Europe; In addition to this kit, order CK502 Electronic Coin Drop Kit
	CK125	Electronic Coin Drop Kit	South Africa; In addition to this kit, order CK502 Electronic Coin Drop Kit
	CK109	Electronic Coin Drop Kit	Euro; In addition to this kit, order CK502 Electronic Coin Drop Kit
	CK116	Electronic Coin Drop Kit	Malaysia (default), China and Singapore; In addition to this kit, order CK502 Electronic Coin Drop Kit
	CK117	Electronic Coin Drop Kit	Russia; In addition to this kit, order CK502 Electronic Coin Drop Kit
	CK118	Electronic Coin Drop Kit	Philippine; In addition to this kit, order CK502 Electronic Coin Drop Kit

© Copyright, Alliance Laundry Systems LLC – DO NOT COPY or TRANSMIT

Coin Drop Components for NetMaster Models

H, L, P and S Models Except HT050D and ST050D
Models with NC, NX, ZC and ZX Control Suffixes

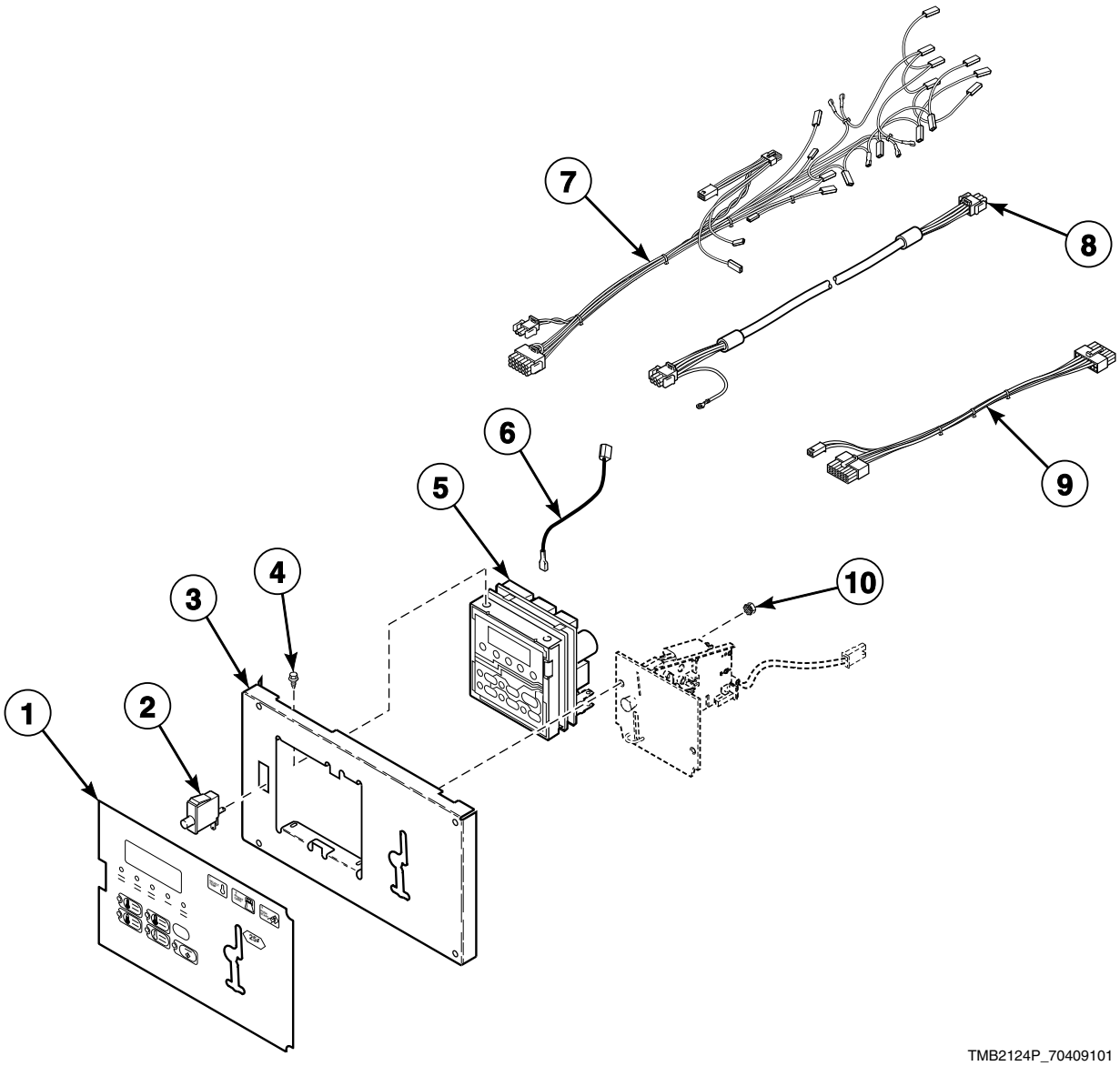

© Copyright, Alliance Laundry Systems LLC – DO NOT COPY or TRANSMIT

Coin Drop Components for NetMaster Models

REF	PART NO.	DESCRIPTION	COMMENTS
	70291001P	Control Plate Kit	Includes items 3, 10 and 70292801 Washer
1	70184301	Overlay	S models; Single drop
	70184302	Overlay	S models; Dual drop
	70239601	Overlay	H models; Single drop
	70239602	Overlay	H models; Dual drop
	70129501	Overlay	P models; Single drop
2	70413301	Pushbutton Switch	
3	70175807	Control Plate Assembly	
4	D501524	Screw	4 required for mounting control
5	D505905P	Control Kit	
6	M412645	Jumper Wire Assembly	Ground wire
7	44010801P	Control Panel Harness	H, P and S non-CE models
	44010901	Control Panel Harness	H, P and S CE models
8	M414875P	Communication Cable	Models HT050L, HT050N, SA050L, SA050N, ST050E, ST050L, ST050N, ST050S and ST050T; ZC and ZX control suffixes
9	800217	Network Wire Harness Assembly	Models HT050L, HT050N, SA050L, SA050N, ST050E, ST050L, ST050N, ST050S and ST050T; ZC and ZX control suffixes
10	29786	Nut	2 required

© Copyright, Alliance Laundry Systems LLC – DO NOT COPY or TRANSMIT

Card Reader NetMaster Models

H, L, P and S Models Except HT050D and ST050D
Models with NR, NY, ZR and ZY Control Suffixes

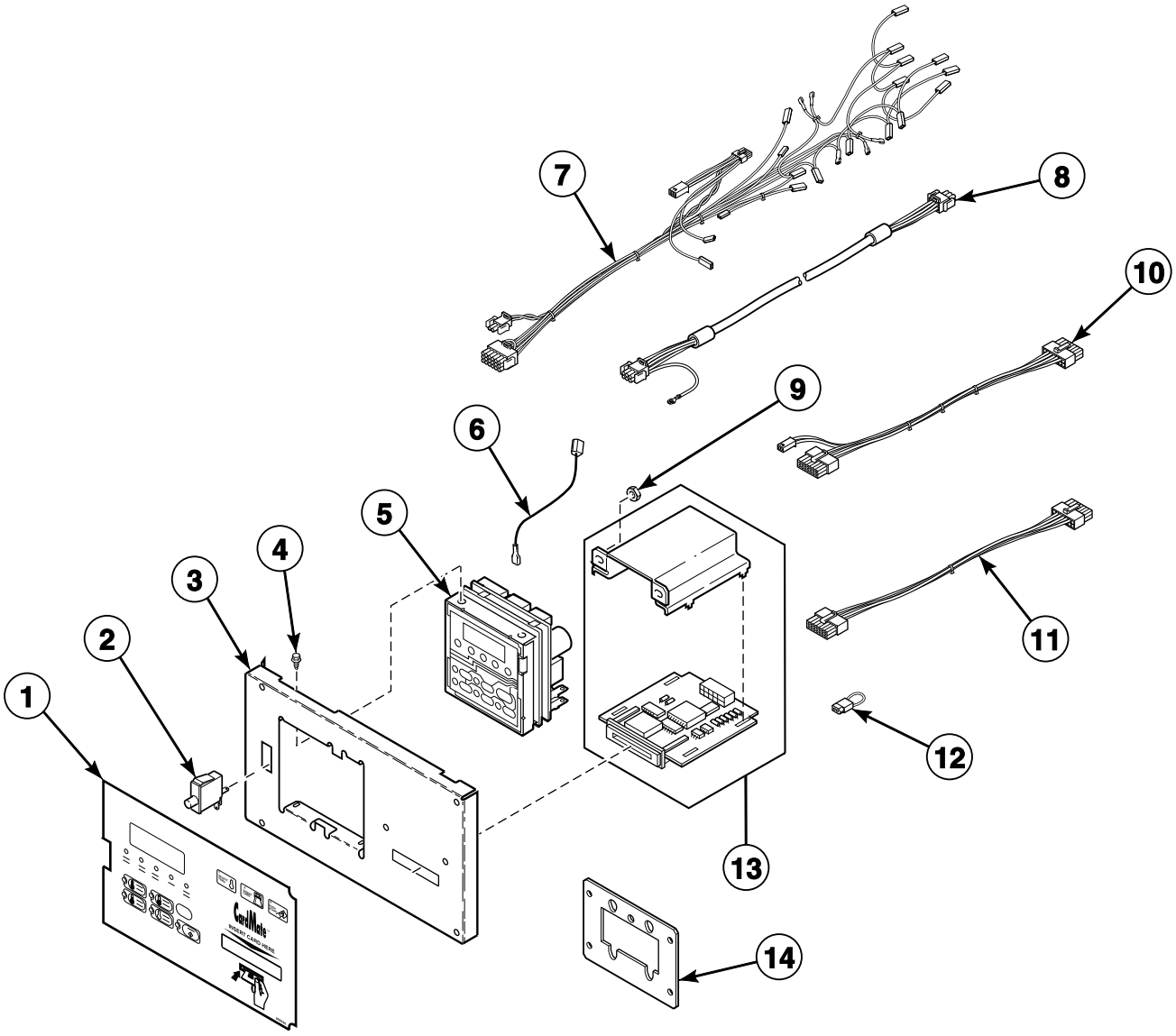

© Copyright, Alliance Laundry Systems LLC – DO NOT COPY or TRANSMIT

Card Reader NetMaster Models

REF	PART NO.	DESCRIPTION	COMMENTS
1	N/A	Overlay	ST and SU models; NY control suffix
	70184401	Overlay	S models; NR and ZR control suffixes
	N/A	Overlay	H models; NR and ZR control suffixes
	N/A	Overlay	HT and HU models; NY control suffix
2	70413301	Pushbutton Switch	
3	N/A	Control Plate Assembly	NR and ZR control suffixes
	70497201	Control Plate Assembly	Non-Australian models; NY control suffix
4	D501524	Screw	4 required
5	D505905P	Control Kit	Includes tape
6	M412645	Jumper Wire Assembly	Ground wire
7	44010801P	Control Panel Harness	H, L, P and S non-CE models
	44010901	Control Panel Harness	H, P and S CE models
8	M414875P	Communication Cable	Models HT050L, HT050N, SA050L, SA050N, ST050E, ST050L, ST050N, ST050S and ST050T; ZR control suffix
9	70054	Nut	2 required for models with NR and ZR control suffixes; 4 required for non-Australian models with NY control suffix
10	800217	Network Wire Harness Assembly	Models HT050L, HT050N, SA050L, SA050N, ST050E, ST050L, ST050N, ST050S and ST050T; ZR control suffix
11	70206601	Card Reader Network Harness Assembly	Models HT050L, HT050N, SA050L, SA050N, ST050E, ST050L, ST050N, ST050S and ST050T; ZR control suffix
	70211801	Card Reader Harness Assembly	NR control suffix
12	N/A	Bypass Jumper Wire	
13	D510068P	Card Reader and Bracket Assembly	NR and ZR control suffixes
14	70208801	Mounting Plate	Non-Australian models; NY control suffix

N/A = Part no longer available

© Copyright, Alliance Laundry Systems LLC – DO NOT COPY or TRANSMIT

Network Connection for NetMaster Models

Models HT050L, HT050N, SA050L, SA050N, ST050E, ST050L, ST050N, ST050S and ST050T
Models with ZC, ZR, ZX and ZY Control Suffixes

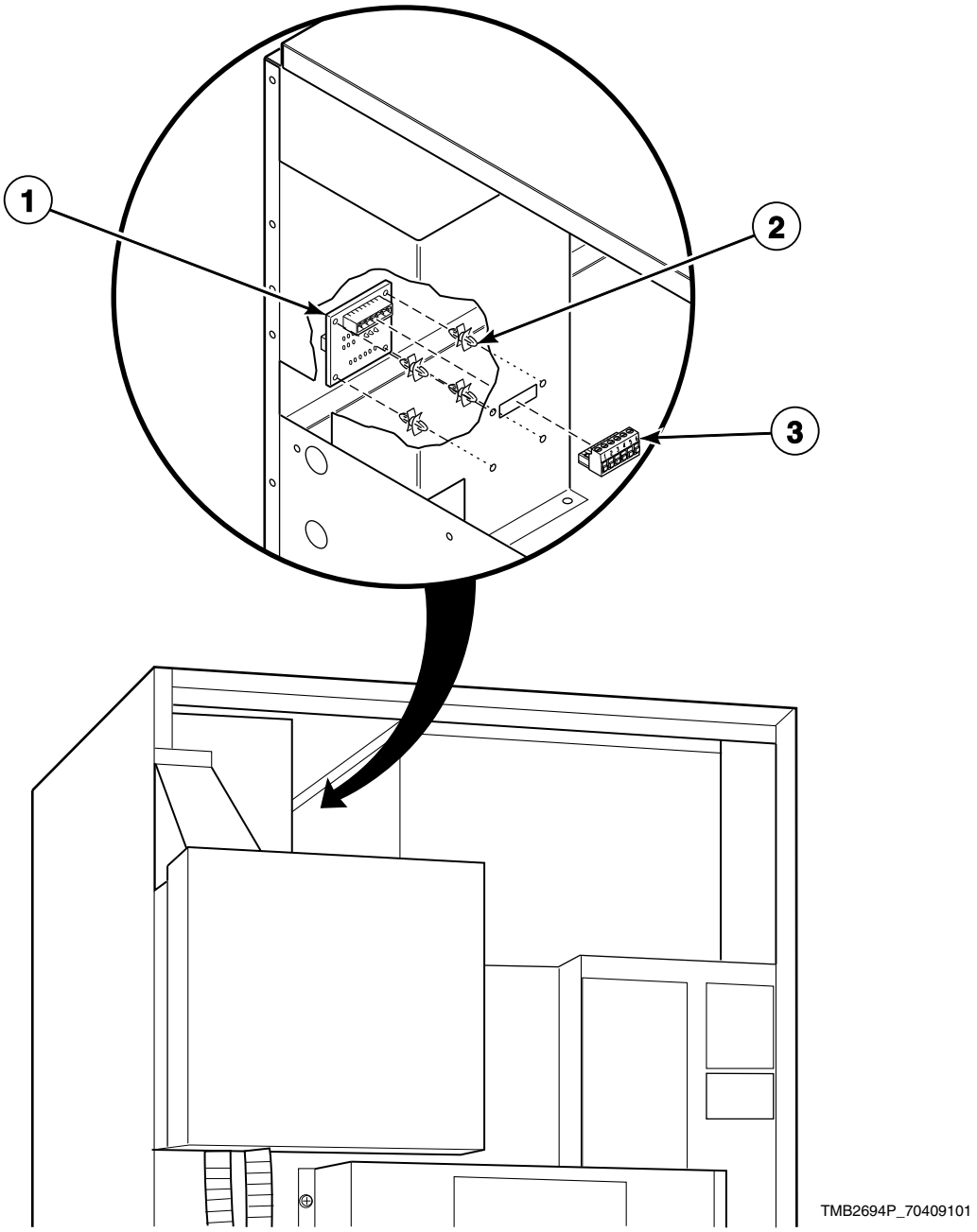

© Copyright, Alliance Laundry Systems LLC – DO NOT COPY or TRANSMIT

Network Connection for NetMaster Models

REF	PART NO.	DESCRIPTION	COMMENTS
	210016P	Network Board Assembly	ZC, ZR and ZX control suffixes
	210157P	Network Board	For desktop PC
	210165	Network Cable	For laptop PC
	210097	Communication Board	
1	210095P	Communication Board	
2	210098	PC Board Standoff	4 required
3	210099	Communication Connector	

© Copyright, Alliance Laundry Systems LLC – DO NOT COPY or TRANSMIT

Emergency Stop Button - CE Models

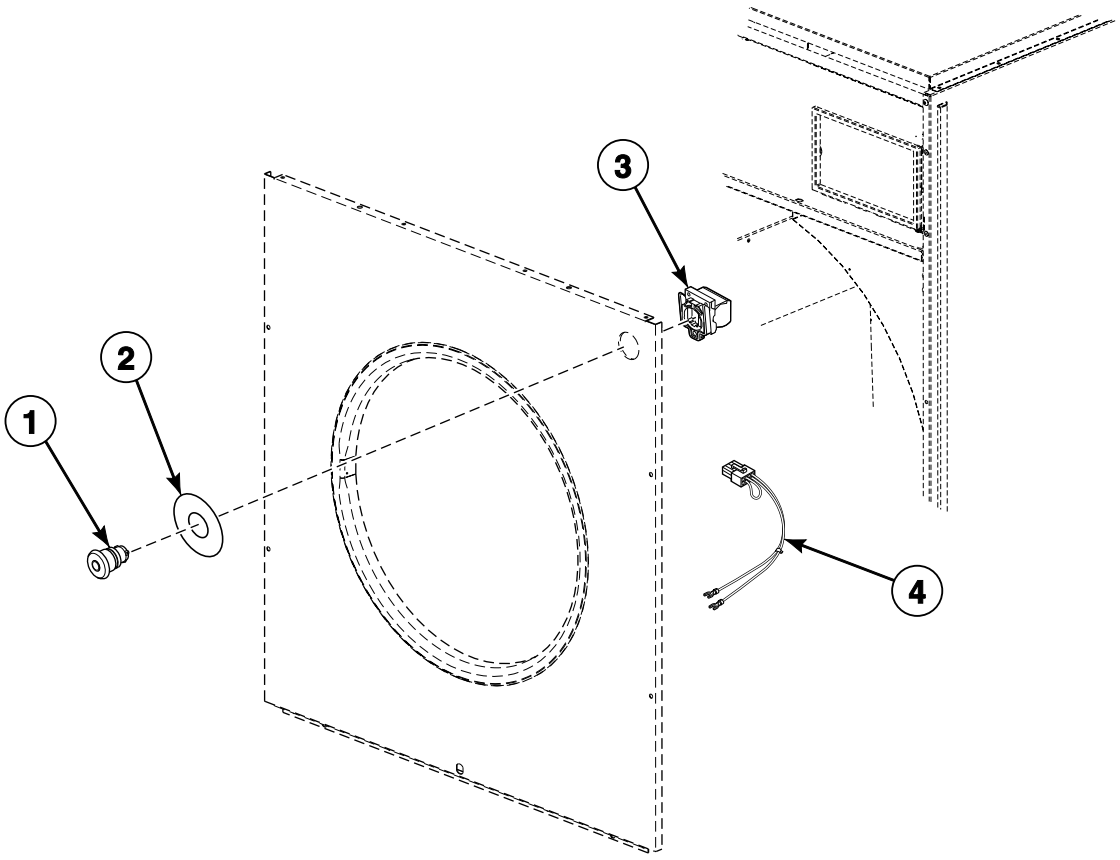

TMB2386P_70409101

© Copyright, Alliance Laundry Systems LLC – DO NOT COPY or TRANSMIT

Emergency Stop Button - CE Models

REF	PART NO.	DESCRIPTION	COMMENTS
	F200233700P	Emergency Stop Button Kit	To switch from old style button to new style button
1	44018801	Pushbutton	Models through 9/30/07
	F200233500	Emergency Stop Pushbutton	Models starting 10/1/07
2	44012901	Emergency Stop Label	
3	44018701	Contact Block	Models through 9/30/07
	44018901	Contact Block	Models through 9/30/07; Order in addition to 44018701 Contact Block on models with 3O and R3 control suffixes
	F200233401P	Contact Block Switch	Models starting 10/1/07 through 8/17/14
	F8069501	Contact Switch	Models starting 8/18/14
	F8538101	Contact Base	Models starting 8/18/14
4	70083901	Emergency Stop Switch Harness Assembly	G models starting Serial No. 0707008006; K models; H, S and U models starting Serial No. 0308001308; B models starting Serial No. 0704000046
	44063201P	Front Panel Harness Assembly	B models; Models starting Serial No. 0704000046
	N/A	Emergency Stop Harness	B models; Models starting Serial No. 0704000046

N/A = Part no longer available

© Copyright, Alliance Laundry Systems LLC – DO NOT COPY or TRANSMIT

Cabinet Front Components (Drawing 1 of 2)

All Models Through Serial No. 0308001307; B and I Models Starting Serial No. 0308001308 Through Serial No. 0703023529; C, L, P and Y Models Starting Serial No. 0308001308; G Models Through Serial No. 0110002231 and Starting Again Serial No. 0707008006 Through Serial No. 0708020563; K Models Through Serial No. 0708020563

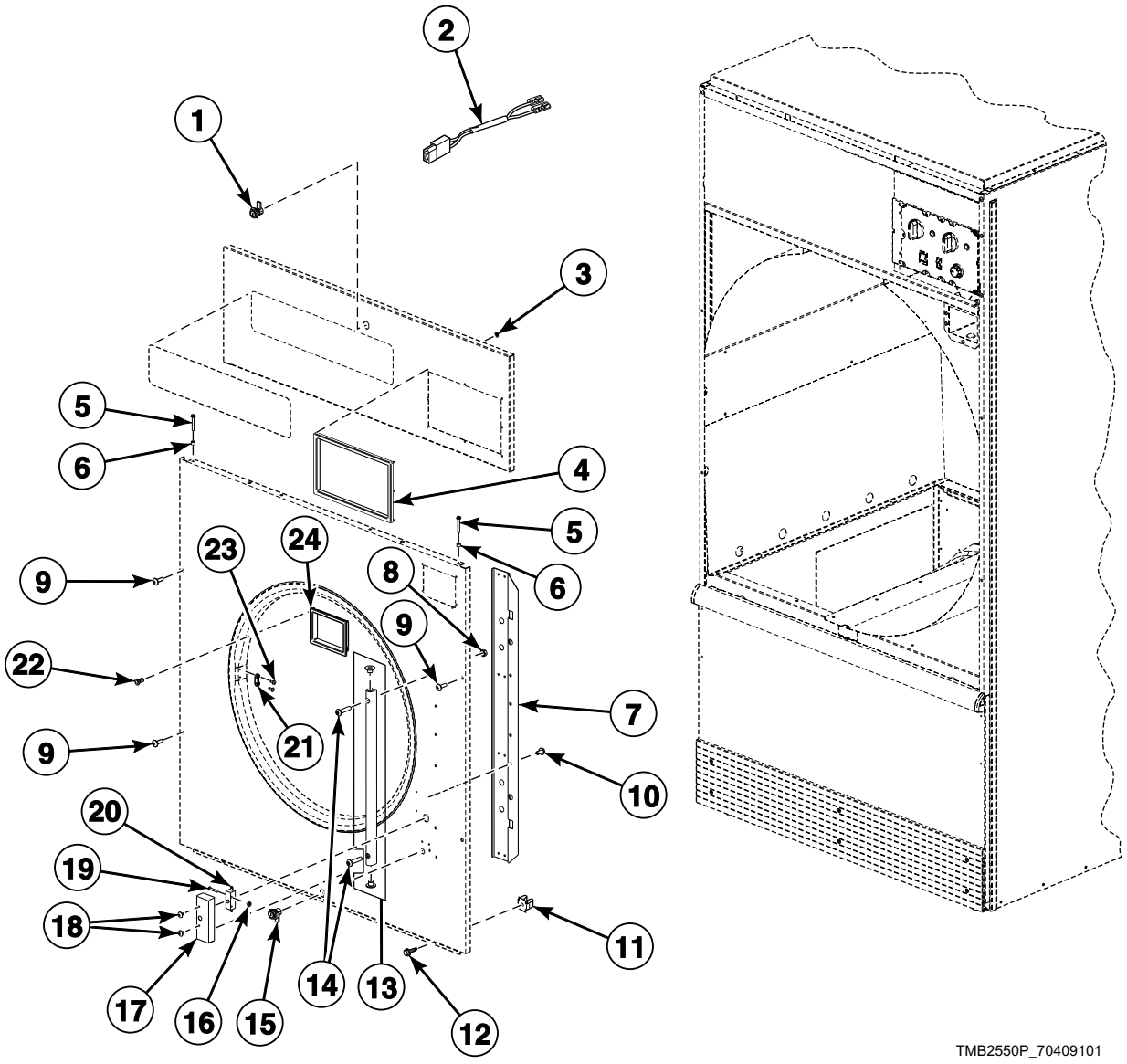

© Copyright, Alliance Laundry Systems LLC – DO NOT COPY or TRANSMIT

Cabinet Front Components (Drawing 1 of 2)

REF	PART NO.	DESCRIPTION	COMMENTS
	M4379P4	Tumbler Dolly Kit	
1	70733701	Lock, Key and Nut Kit	Control panel; RL001 key code; Optional if same key is to be used for control lock
	70155601	Key	RL001
2	44023001	Coin Vault Switch Harness	BC, BX, NC, NX, ZC and ZX control suffixes
3	M400977	Nut	Push; 8 required
4	70529402	Control Trim	H models
	44016401	Control Trim	All other models
5	70275801	Screw	
6	56079	Panel Locator	
7	44001801	Door Switch Wire Channel	Models through Serial No. 020802178
8	29786	Nut	
9	70033502	Screw	
	70182601	Screw	For stainless steel panel
10	44023301	Screw	
11	70030501	Expansion Clip	Upper and lower front panel attachment
12	M411072	Screw	6 required; For front panel
13	44035001	Door Hinge Lug Assembly	
14	70033504	Screw	
15	70733701	Lock, Key and Nut Kit	Lint panel; RL001 key code; Optional if same key is to be used for control lock
	70155601	Key	RL001
	70722301	Lock, Key and Nut Kit	Lint panel; RL002 key code; Standard coin and card models
	70155602	Key	RL002
16	02788	Nut	
17	44001301	Door Switch Cover	
18	431287	Screw	
19	M402574	Screw	
20	44018201	Door Switch	
21	M401223	Door Latch	
22	M400972	Shadow Box Clip	6 required for item 24
23	M400003	Pop Rivet	
24	70117501	Coin Vault Trim	H models
	70117502	Coin Vault Trim	B, C, G, I, K, L, P and S models

© Copyright, Alliance Laundry Systems LLC – DO NOT COPY or TRANSMIT

Cabinet Front Components (Drawing 2 of 2)

H, N, S and U Models Starting Serial No. 0308001308; B and I Models Starting Serial No. 0704000046;
G and K Models Starting Serial No. 0709000027

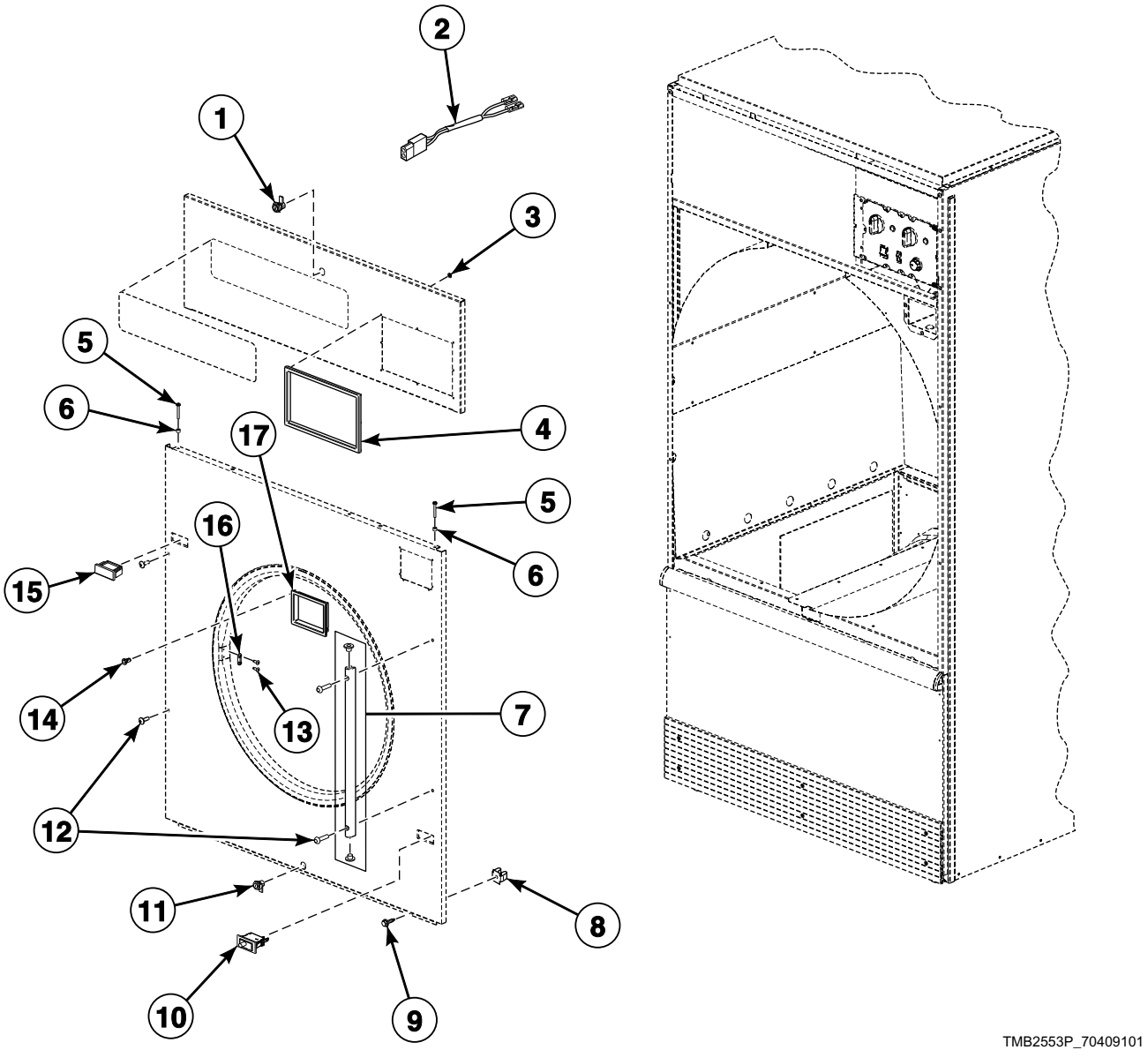

TMB2553P_70409101

© Copyright, Alliance Laundry Systems LLC – DO NOT COPY or TRANSMIT

Cabinet Front Components (Drawing 2 of 2)

REF	PART NO.	DESCRIPTION	COMMENTS
	M4379P4	Tumbler Dolly Kit	
1	70733701	Lock, Key and Nut Kit	RL001 key code; Control panel; Optional if same key is to be used for control lock
	70155601	Key	RL001
2	44023001	Coin Vault Switch Harness	BC, BX, NC, NX, ZC and ZX control suffixes
3	M400977	Nut	8 required per control trim
4	70529402	Control Trim	H models
	44016401	Control Trim	G, K, S and U models
5	70275801	Screw	4 required
6	56079	Panel Locator	2 required
7	44035001	Door Hinge Lug Assembly	
8	70030501	Expansion Clip	
9	M411072	Screw	4 required; Front panel; Bottom
10	70413301	Pushbutton Switch	Door switch
11	70733701	Lock, Key and Nut Kit	RL001 key code; Lint panel; Optional if same key is to be used for control lock
	70155601	Key	RL001
	70722301	Lock, Key and Nut Kit	RL002 key code; Lint panel; Standard coin and card models
	70155602	Key	RL002
12	70033502	Screw	4 required for painted panels; 2 required for stainless steel panels in addition to 2 of 70182601 Screw
	70182601	Screw	2 required for stainless steel panels in addition to 2 of 70033502 Screw
13	M400003	Pop Rivet	2 per door latch; 1/8 inch
14	M400972	Shadow Box Clip	6 required
15	44057801W	Switch Hole Plug	White
	44057801Q	Switch Hole Plug	Bisque
	44057801B	Switch Hole Plug	Black; For stainless steel and turquoise models
16	M401223	Door Latch	2 required
17	70117501	Coin Vault Trim	H models; Gray
	70117502	Coin Vault Trim	G, K, S and U models; Black

© Copyright, Alliance Laundry Systems LLC – DO NOT COPY or TRANSMIT

Cabinet Panels and Nameplates (Drawing 1 of 2)

All Models Through Serial No. 0308001307; B and I Models Starting Serial No. 0308001308 Through Serial No. 0703023529; C, L, P and Y Models Starting Serial No. 0308001308; G Models Through Serial No. 0110002231 and Starting Again Serial No. 0707008006 Through Serial No. 0708020563; K Models Through Serial No. 0708020563

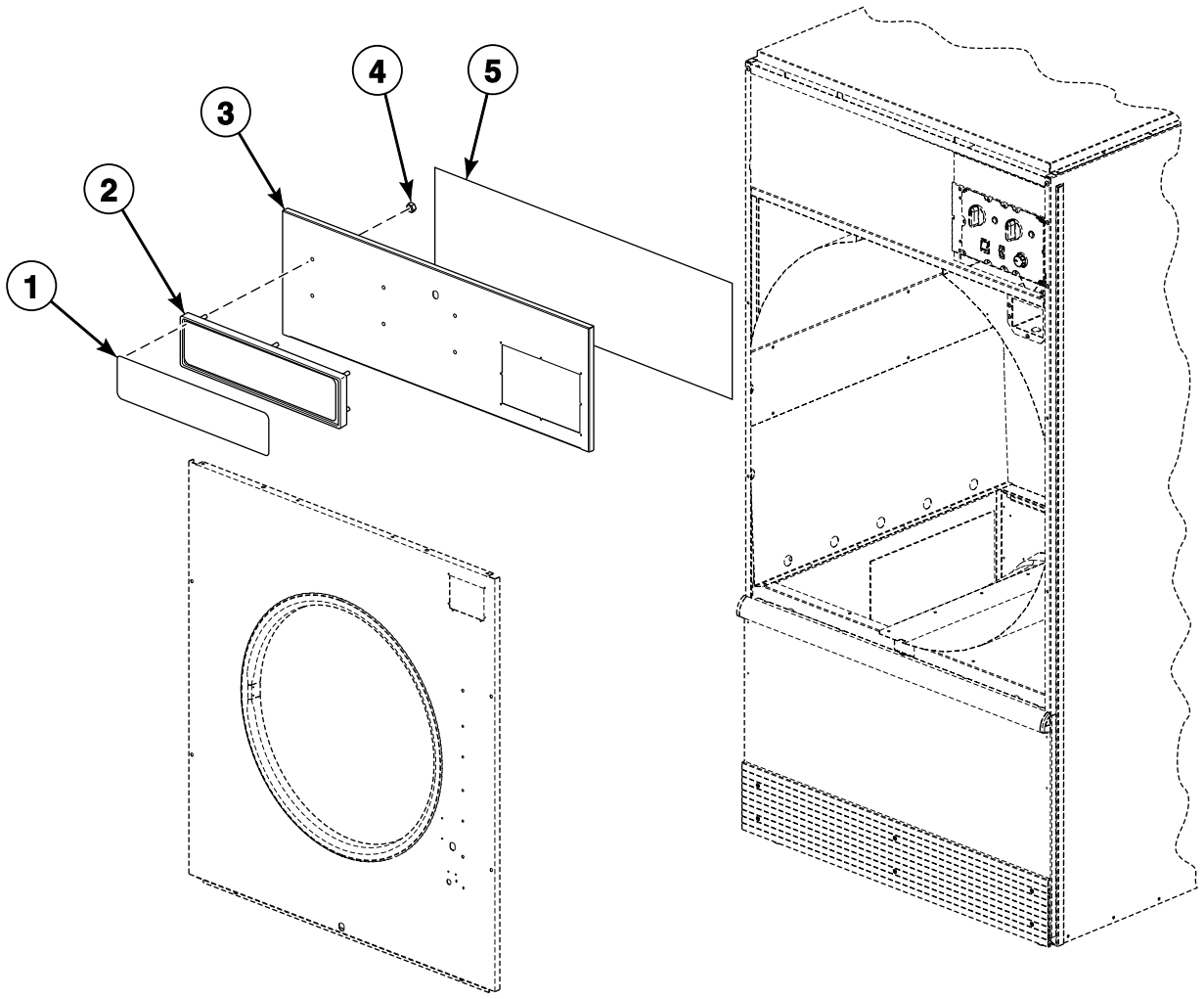

TMB2551P_70409101

© Copyright, Alliance Laundry Systems LLC – DO NOT COPY or TRANSMIT

Cabinet Panels and Nameplates (Drawing 1 of 2)

REF	PART NO.	DESCRIPTION	COMMENTS
1	44010401	Nameplate	H models
	44010601	Nameplate	S models
	M412963	Nameplate Overlay	U models
	70128901	Nameplate Overlay	P models
	70243901	Nameplate	L models
	44104501	Nameplate Overlay	Y models
	44062901	Nameplate	C models
	44046801	Nameplate	B and I models
	44130301	Nameplate Overlay	K models
	70410201	Nameplate Overlay	G models; Models starting Serial No. 0707008006
2	70117401	Nameplate Bezel	L and P models
3	44000121WP	Control Panel	H, P, S and U models
	44000118P	Control Panel	H, P, S and U models; Stainless steel
	44000119*	Control Panel	GT and GU models; Models through Serial No. 0110002231
	N/A	Control Panel	GT and GU models; Models through Serial No. 0110002231; Stainless steel
	44000117BP	Control Panel	L models
	N/A	Control Panel	Y models
	N/A	Control Panel	Y models; Stainless steel
	44040015W	Control Panel	B, C and I models; 3O, 3V, 3X, CD, MT, R3 and RT control suffixes; Manual
	44040002	Control Panel	B, C and I models; 3O, 3V, 3X, CD, MT, R3 and RT control suffixes; Manual; Stainless steel
	44040003*	Control Panel	B, C and I models; DO, DV and RD control suffixes; Electronic
	44040004	Control Panel	B, C and I models; DO, DV and RD control suffixes; Electronic; Stainless steel
	44040005*	Control Panel	G models starting Serial No. 0707008006; K models
	44040013	Control Panel	G models starting Serial No. 0707008006; K models; Stainless steel
4	M400977	Nut	L and P models
5	44020601	Insulation	Used inside access panel

*** Add Letter To Designate Color. L - Almond P - Turquoise Q - Bisque W - White**

N/A = Part no longer available

© Copyright, Alliance Laundry Systems LLC – DO NOT COPY or TRANSMIT

Cabinet Panels and Nameplates (Drawing 2 of 2)

H, N, S and U Models Starting Serial No. 0308001308;
B and I Models Starting Serial No. 0704000046;
G and K Models Starting Serial No. 0709000027

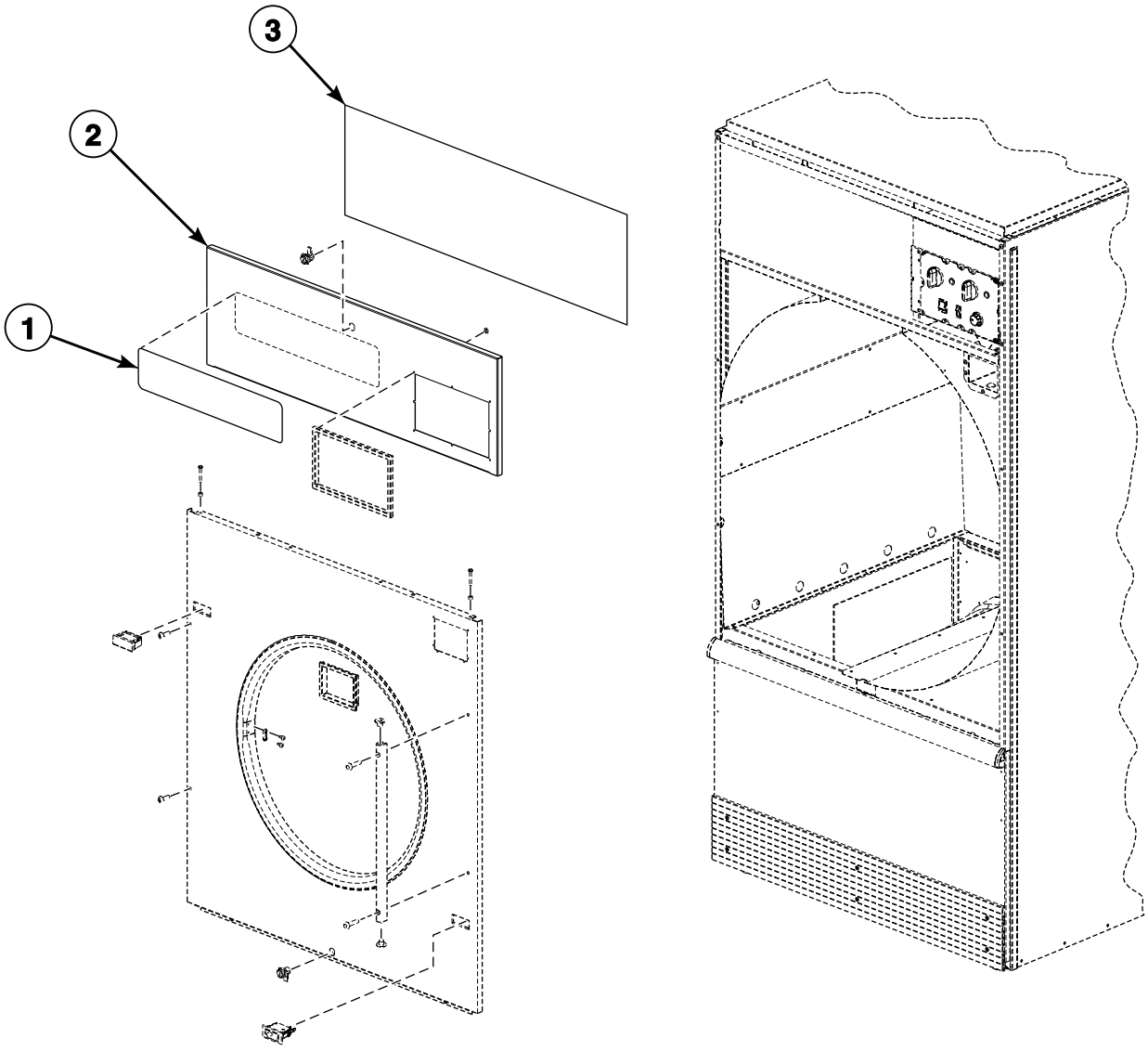

TMB2554P_70409101

© Copyright, Alliance Laundry Systems LLC – DO NOT COPY or TRANSMIT

Cabinet Panels and Nameplates (Drawing 2 of 2)

REF	PART NO.	DESCRIPTION	COMMENTS
1	44010401	Nameplate	H models
	44010601	Nameplate	S models
	M412963	Nameplate Overlay	U models
	44035801	Nameplate	N models
	44046801	Nameplate	B and I models
	70410201	Nameplate Overlay	G models
	44130301	Nameplate Overlay	K models
2	44040015W	Control Panel	B and I models; 3O, 3V, 3X, CD, MT, R3 and RT control suffixes; Manual
	44040002	Control Panel	B and I models; 3O, 3V, 3X, CD, MT, R3 and RT control suffixes; Manual; Stainless steel
	44040003*	Control Panel	B and I models; DO, DV and RD control suffixes; Electronic
	44040004	Control Panel	B and I models; DO, DV and RD control suffixes; Electronic; Stainless steel
	44000121WP	Control Panel	All other models
	44000118P	Control Panel	All other models; Stainless steel
3	44020601	Insulation	Used inside access panel

*** Add Letter To Designate Color. L - Almond Q - Bisque W - White**

N/A = Part no longer available

NOTE: All front panel assemblies include M401223 Door Latch and 2 of M400003 Pop Rivet

© Copyright, Alliance Laundry Systems LLC – DO NOT COPY or TRANSMIT

Front Panel Assemblies (Drawing 1 of 3)

All Models Through Serial No. 0308001307; B and I Models Starting Serial No. 0308001308 Through Serial No. 0703023529; C, L, P and Y Models Starting Serial No. 0308001308; G Models Through Serial No. 0110002231 and Starting Again Serial No. 0707008006 Through Serial No. 0708020563; K Models Through Serial No. 0708020563

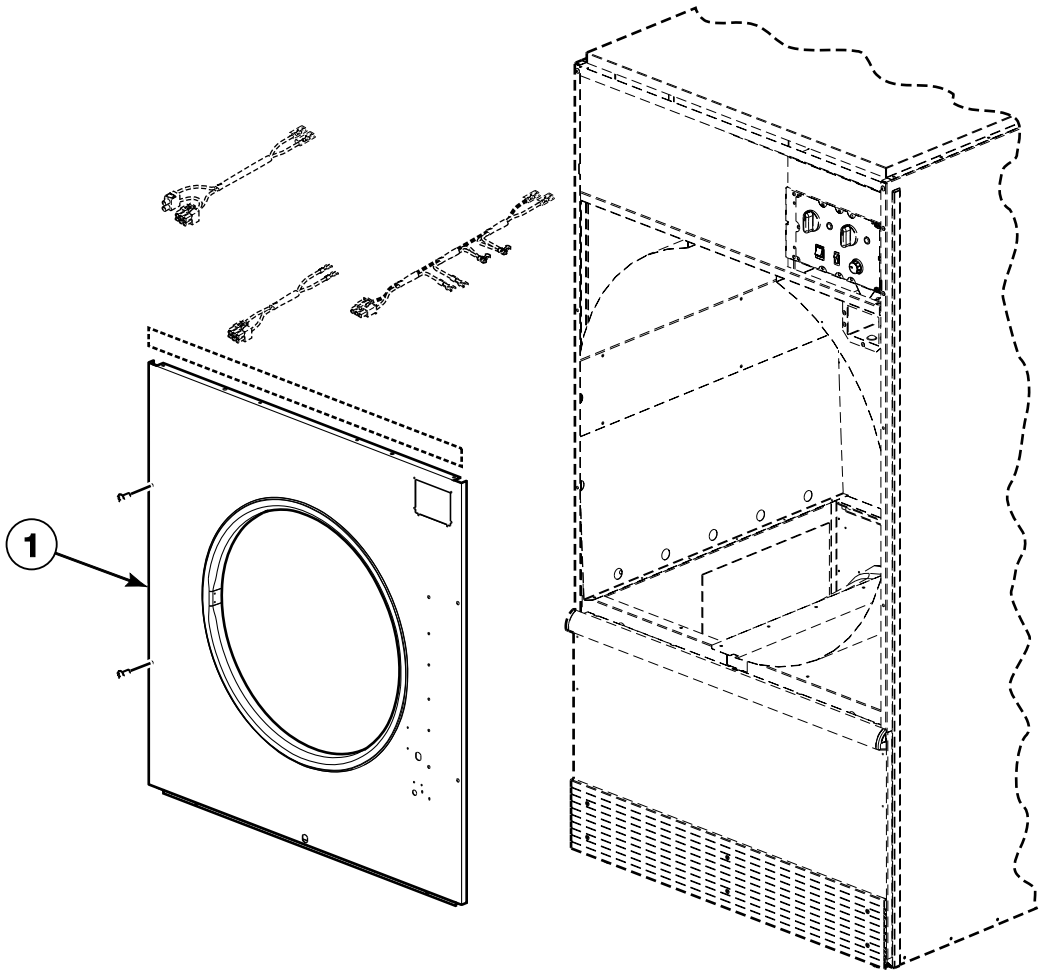

TMB2552PA_70409101

© Copyright, Alliance Laundry Systems LLC – DO NOT COPY or TRANSMIT

Front Panel Assemblies (Drawing 1 of 3)

REF	PART NO.	DESCRIPTION	COMMENTS
1	44077801*P	Front Panel Assembly	BC, BX, CD, CX, DV, NC, NX, SD, SX, ZC and ZX control suffixes through Serial No. 0308001307
	44077802P	Front Panel Assembly	BC, BX, CD, CX, DV, NC, NX, SD, SX, ZC and ZX control suffixes through Serial No. 0308001307; Stainless steel
	N/A	Front Panel Assembly	BL, BU, BY, CY, DV, NR, NY, ZR and ZY control suffixes through Serial No. 0308001307
	N/A	Front Panel Assembly	BL, BU, BY, CY, DV, NR, NY, ZR and ZY control suffixes through Serial No. 0308001307; Stainless steel
	44077805*P	Front Panel Assembly	Non-CE models; Models through Serial No. 0308001307; DO, MT, OM, QT, RD, RM, RQ and RT control suffixes
	44077806P	Front Panel Assembly	Non-CE models; Models through Serial No. 0308001307; DO, MT, OM, QT, RD, RM, RQ and RT control suffixes; Stainless steel
	44077811*P	Front Panel Assembly	CE models; Models through Serial No. 0308001307; DO, MT, OM, QT, RD, RM, RQ and RT control suffixes
	44077812	Front Panel Assembly	CE models; Models through Serial No. 0308001307; DO, MT, OM, QT, RD, RM, RQ and RT control suffixes; Stainless steel
	44077909*	Front Panel Assembly	B, C, I, L and P models starting Serial No. 0308001308; GT and GU models through Serial No. 0110002231; BC, BX, CD, CX, DV, NC, NX, SD, SX, ZC and ZX control suffixes
	44077910	Front Panel Assembly	B, C, I, L and P models starting Serial No. 0308001308; GT and GU models through Serial No. 0110002231; BC, BX, CD, CX, DV, NC, NX, SD, SX, ZC and ZX control suffixes; Stainless steel
	44077911*	Front Panel Assembly	B, C, I, L, P and Y models starting Serial No. 0308001308; GT and GU models through Serial No. 0110002231; BL, BU, BY, CY, DV, NR, NY, ZR, and ZY control suffixes
	44077912	Front Panel Assembly	B, C, I, L, P and Y models starting Serial No. 0308001308; GT and GU models through Serial No. 0110002231; BL, BU, BY, CY, DV, NR, NY, ZR, and ZY control suffixes; Stainless steel
	44077913*P	Front Panel Assembly	B, C, I, L, P and Y non-CE models starting Serial No. 0308001308; GA and GT models through Serial No. 0110002231 and starting again Serial No. 0707008006; KA and KT models; DO, MT, OM, QT, R3, RD, RM, RQ and RT control suffixes
	44077914	Front Panel Assembly	B, C, I, L, P and Y non-CE models starting Serial No. 0308001308; GA and GT models through Serial No. 0110002231 and starting again Serial No. 0707008006; KA and KT models; DO, MT, OM, QT, R3, RD, RM, RQ and RT control suffixes; Stainless steel
	44077915*P	Front Panel Assembly	B, C, L and P CE models starting Serial No. 0308001308; GU models through Serial No. 0110002231 and starting again Serial No. 0707008006; KU models; DO, MT, OM, QT, R3, RD, RM, RQ and RT control suffixes
	44077916	Front Panel Assembly	B, C, L and P CE models starting Serial No. 0308001308; GU models through Serial No. 0110002231 and starting again Serial No. 0707008006; KU models; DO, MT, OM, QT, R3, RD, RM, RQ and RT control suffixes; Stainless steel

*** Add Letter To Designate Color. L - Almond P - Turquoise Q - Bisque W - White**

N/A = Part no longer available

NOTE: All front panel assemblies include M401223 Door Latch and 2 of M400003 Pop Rivet

© Copyright, Alliance Laundry Systems LLC – DO NOT COPY or TRANSMIT

Front Panel Assemblies (Drawing 2 of 3)

All Models Through Serial No. 0308001307; B and I Models Starting Serial No. 0308001308 Through Serial No. 0703023529; C, L, P and Y Models Starting Serial No. 0308001308; G Models Through Serial No. 0110002231 and Starting Again Serial No. 0707008006 Through Serial No. 0708020563; K Models Through Serial No. 0708020563

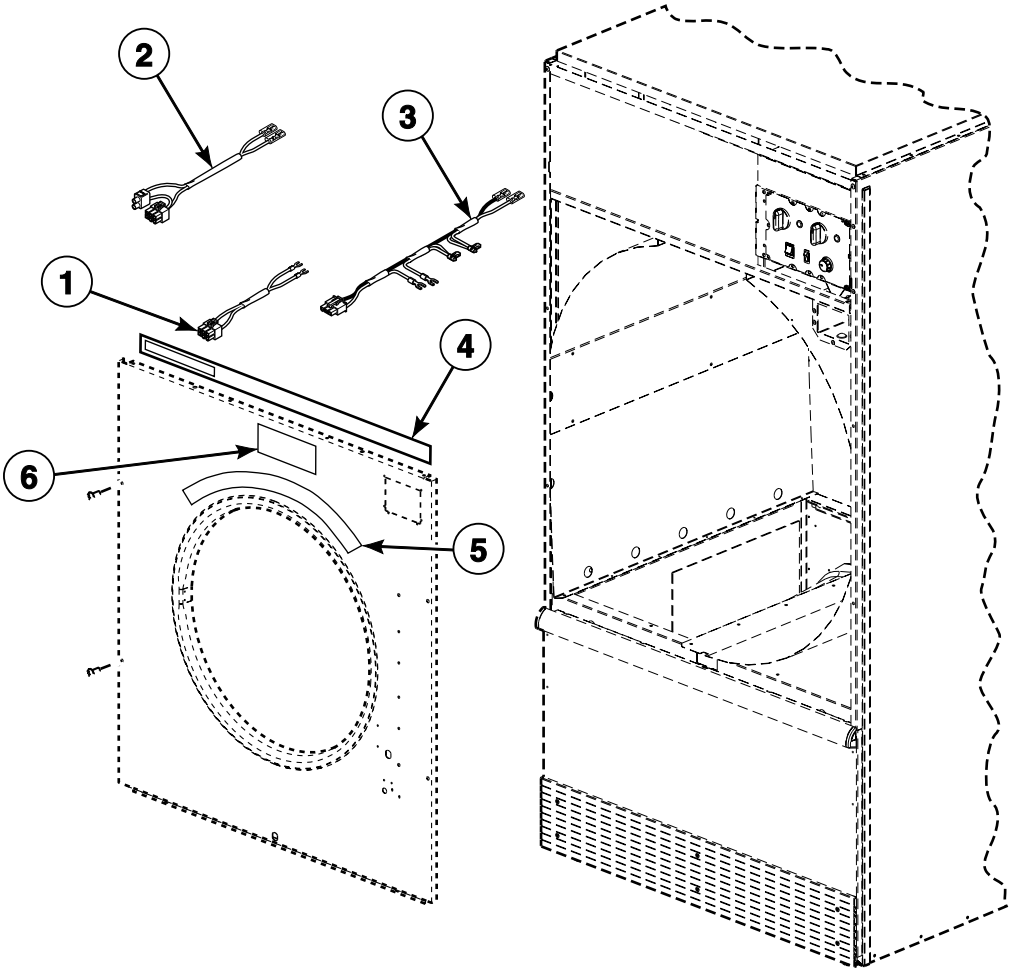

TMB2808P_70409101

© Copyright, Alliance Laundry Systems LLC – DO NOT COPY or TRANSMIT

Front Panel Assemblies (Drawing 2 of 3)

REF	PART NO.	DESCRIPTION	COMMENTS
1	70083901	Emergency Stop Switch Harness Assembly	Use with item 2
2	44063201P	Front Panel Harness Assembly	H, L, P, S and U CE models; GU models through Serial No. 0110002231; Use with item 1
3	44006901	Front Panel Harness	H, L, N, P, S, U and Y non-CE models; GT models through Serial No. 0110002231
	44007001P	Front Panel Harness	Non-coin; H, L, P, S and U CE models; GU models through Serial No. 0110002231
	44047801	Front Panel Harness Assembly	B, C and I non-CE models; DO, MT, RD and RT control suffixes; Models without emergency stop
	44063101P	Front Panel Harness Assembly	H, L, N, P, S, U and Y non-CE models; GT models through Serial No. 0110002231; Models without emergency stop
	44047901	Front Panel Harness Assembly	B and C CE models; DO, MT, RD and RT control suffixes
4	70399402	Access Panel Trim	G models starting Serial No. 0707008006; K models; Mounts over front panel assembly and control panel
5	70534301	Warning Label	
6	70537101	Label	G and K models

© Copyright, Alliance Laundry Systems LLC – DO NOT COPY or TRANSMIT

Front Panel Assemblies (Drawing 3 of 3)

H, N, S and U Models Starting Serial No. 0308001308;
B and I Models Starting Serial No. 0704000046;
G and K Models Starting Serial No. 0709000027

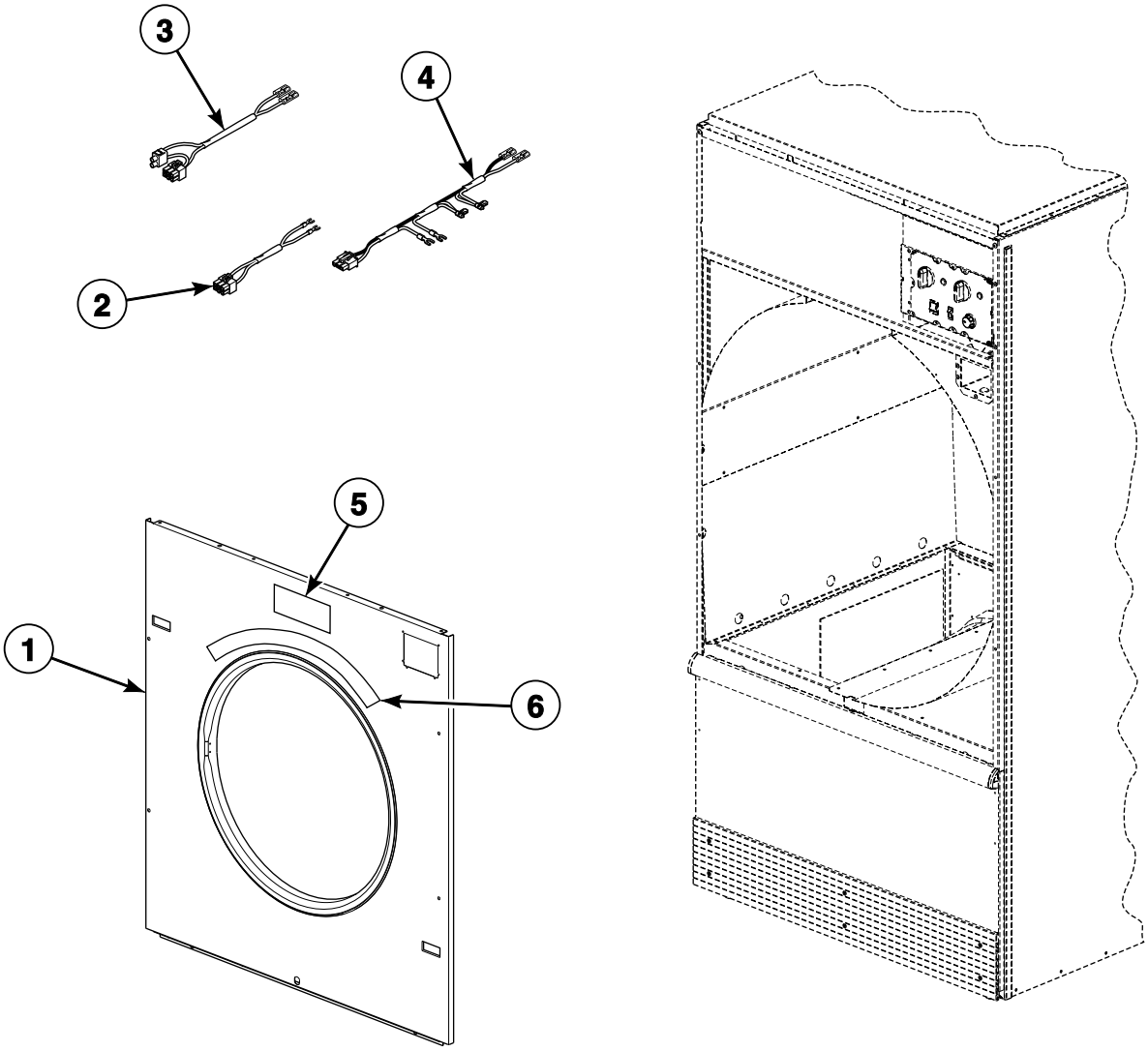

TMB2809P_70409101

© Copyright, Alliance Laundry Systems LLC – DO NOT COPY or TRANSMIT

Front Panel Assemblies (Drawing 3 of 3)

REF	PART NO.	DESCRIPTION	COMMENTS
1	44077901*P	Front Panel Assembly	BC, BX, CD, CX, NC, NX, SD, SX, ZC and ZX control suffixes
	44052521	Front Panel	BC, BX, CD, CX, NC, NX, SD, SX, ZC and ZX control suffixes; Stainless steel
	44077903*P	Front Panel Assembly	BL, BU, BY, CY, NR, NY, ZR and ZY control suffixes
	44077904P	Front Panel Assembly	BL, BU, BY, CY, NR, NY, ZR and ZY control suffixes; Stainless steel
	44077905*P	Front Panel Assembly	Non-CE models; MT, OM, QT, RM, RQ and RT control suffixes
	44077906P	Front Panel Assembly	Non-CE models; MT, OM, QT, RM, RQ and RT control suffixes; Stainless steel
	44077907*P	Front Panel Assembly	CE models; 3O, MT, OM, QT, R3, RM, RQ and RT control suffixes
	44077908P	Front Panel Assembly	CE models; 3O, MT, OM, QT, R3, RM, RQ and RT control suffixes; Stainless steel
2	70083901	Emergency Stop Switch Harness Assembly	Use with item 3
3	44063201P	Front Panel Harness Assembly	Use with item 2
4	44063101P	Front Panel Harness Assembly	Models without emergency stop
5	70537101	Label	G and K models
6	70534301	Warning Label	

*** Add Letter To Designate Color. L - Almond P - Turquoise Q - Bisque W - White**

NOTE: All front panel assemblies include M401223 Door Latch and 2 of M400003 Pop Rivet

© Copyright, Alliance Laundry Systems LLC – DO NOT COPY or TRANSMIT

Lint Panel Switch Assembly - Models Through Serial No. 020802177

All models except B, C, GA, I, K, LA and Thermal Oil models

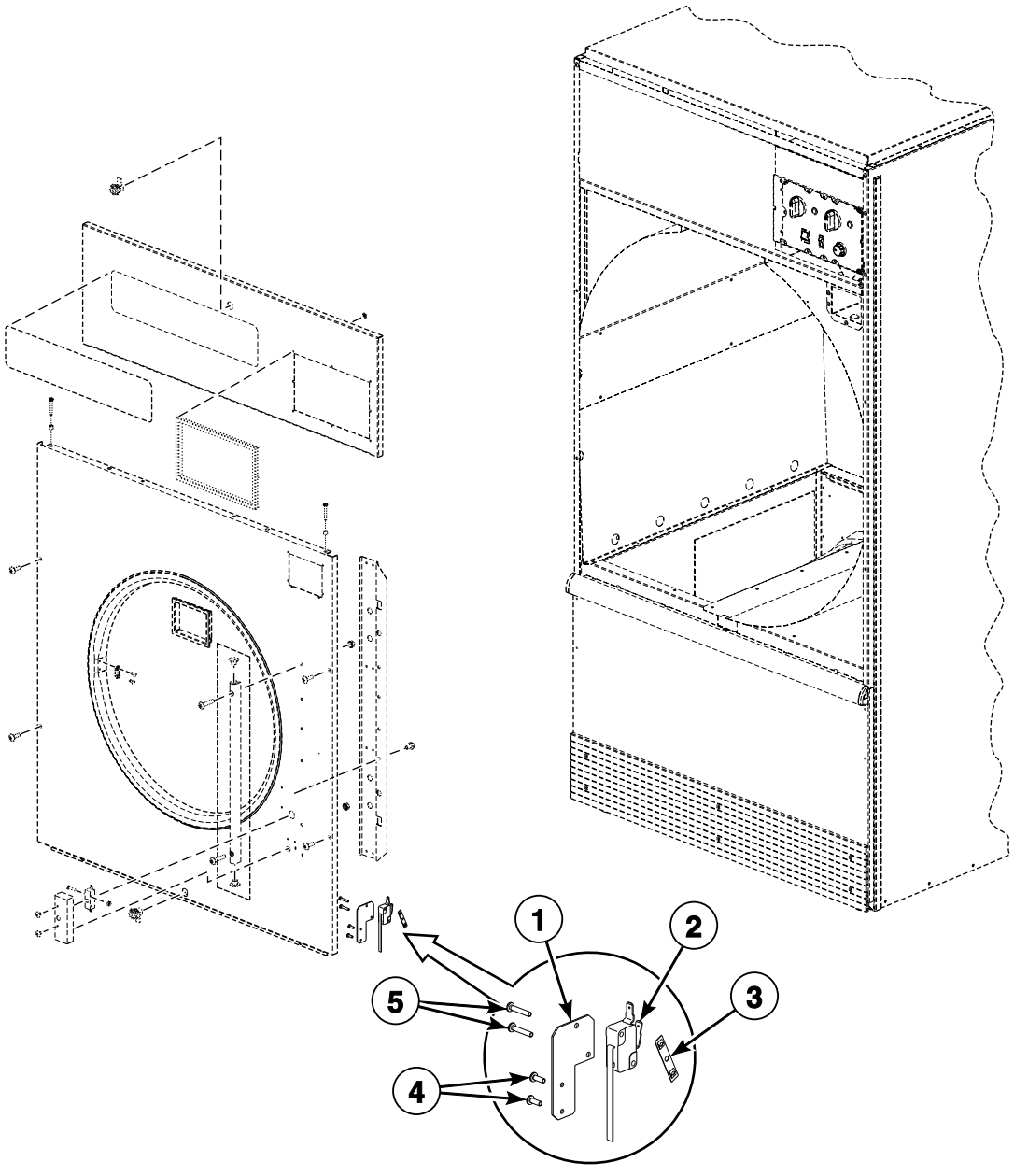

TMB2125P_70409101

© Copyright, Alliance Laundry Systems LLC – DO NOT COPY or TRANSMIT

Lint Panel Switch Assembly - Models Through Serial No. 020802177

REF	PART NO.	DESCRIPTION	COMMENTS
1	44011501	Lint Panel Switch Bracket	
2	44011601	Lever Arm Switch	
3	M400979	Nut	
4	51782	Screw	
5	M401938	Screw	

© Copyright, Alliance Laundry Systems LLC – DO NOT COPY or TRANSMIT

Lint Panel Switch Assembly - Models Starting Serial No. 020802178

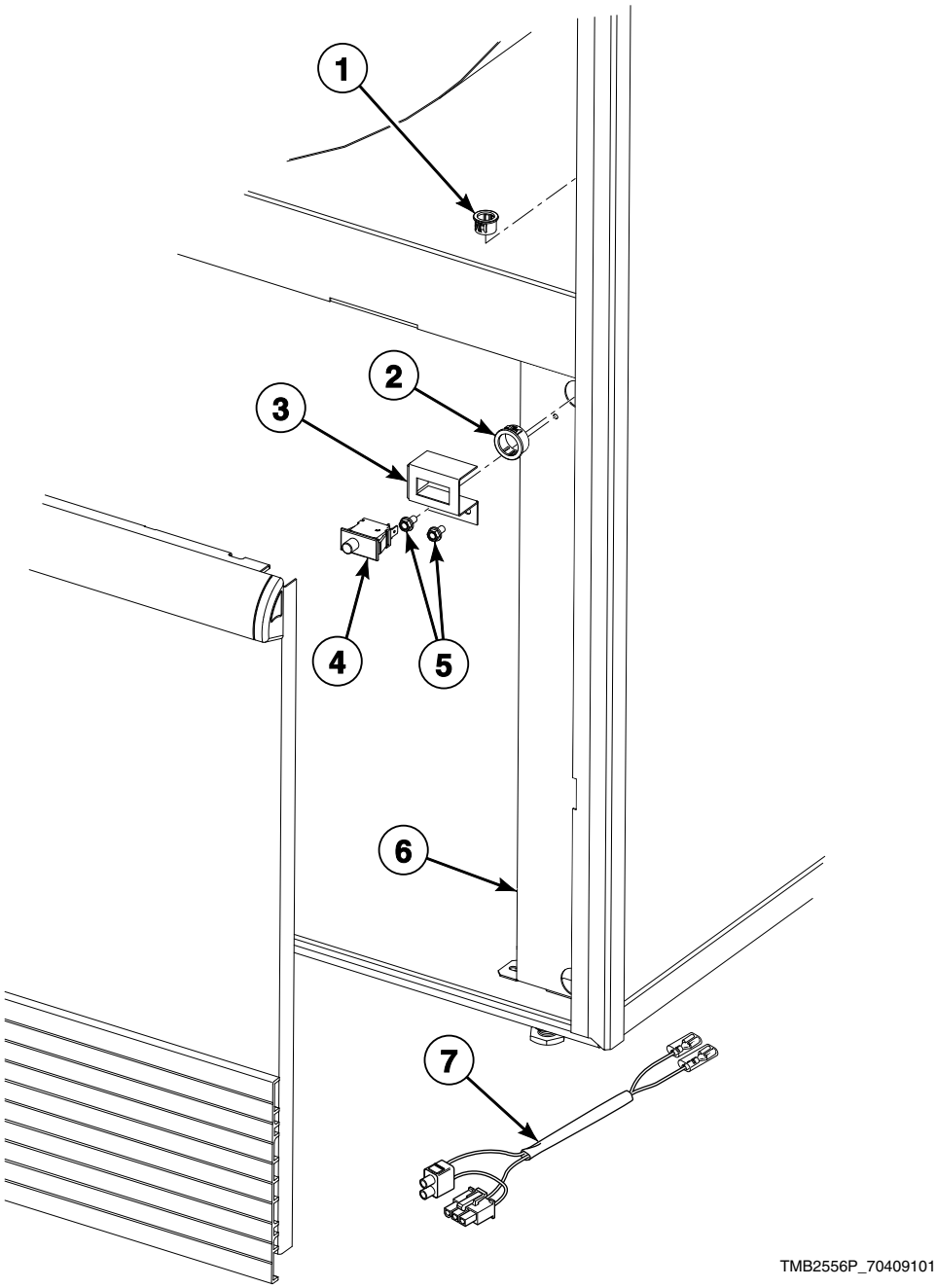

© Copyright, Alliance Laundry Systems LLC – DO NOT COPY or TRANSMIT

Lint Panel Switch Assembly - Models Starting Serial No. 020802178

REF	PART NO.	DESCRIPTION	COMMENTS
1	M411826	Snap Bushing	
2	M400770	Snap Bushing	
3	44118601	Lint Panel Switch Bracket	
4	70413301	Pushbutton Switch	
5	430497	Screw	
6	44001201	Front Pillar	
7	44048101P	Lint Panel Harness Assembly	

© Copyright, Alliance Laundry Systems LLC – DO NOT COPY or TRANSMIT

Lower Cabinet Front Components

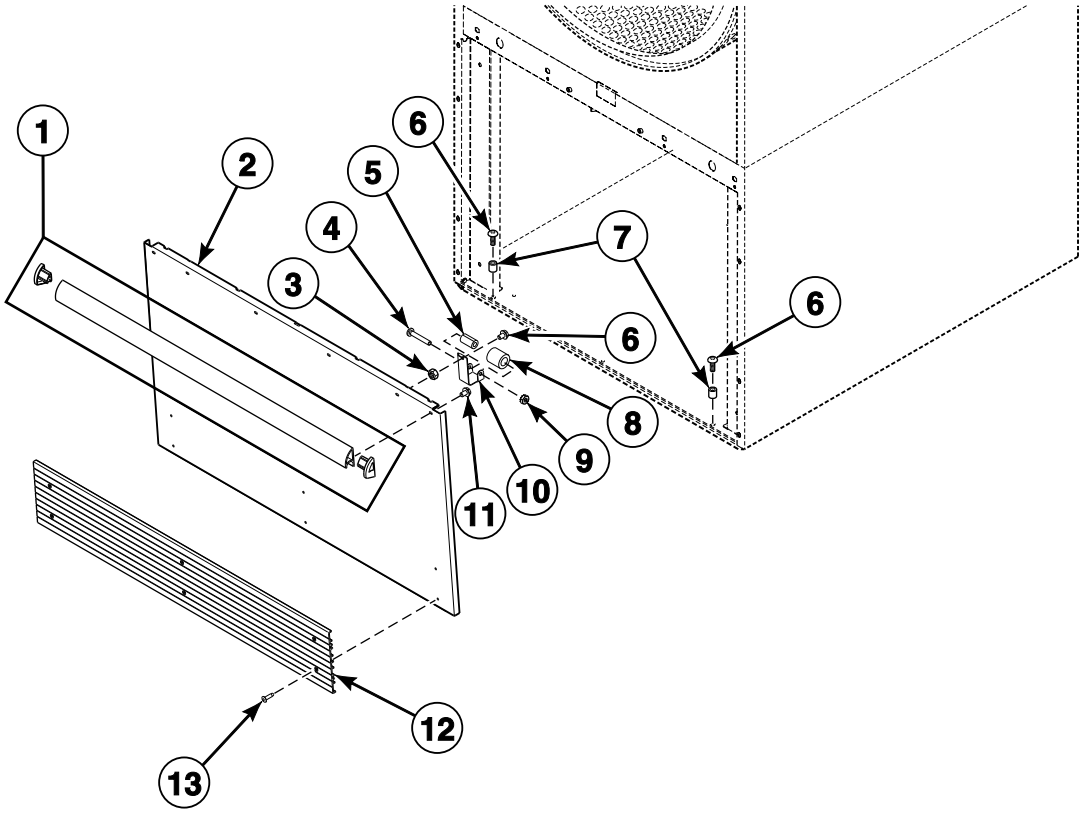

TMB2057P_70409101

© Copyright, Alliance Laundry Systems LLC – DO NOT COPY or TRANSMIT

Lower Cabinet Front Components

REF	PART NO.	DESCRIPTION	COMMENTS
	70114001	Clean Lint Compartment Sticker	Lint compartment must be cleaned daily
	70404001	Roller Bracket Assembly	Includes items 4, 5 and 8-10
1	70154405P	Handle and Caps Assembly	B, C, I, L, P, S, U and Y models; Black; Includes endcaps
	70154406	Handle and Caps Assembly	GT and GU models through Serial No. 0110002231; H and N models; Gray; Includes endcaps
	70407202	Handle Bumper	G models starting Serial No. 0707008006; K models; Black and blue; Does not include endcaps
2	44000001*P	Lint Panel	
	44000002P	Lint Panel	Stainless steel
3	51236	Nut	
4	70072801	Screw	
5	70030201	Roller Catch Spacer	
6	70132301	Screw	
7	56079	Panel Locator	
8	70297601	Roller Catch Wheel	
9	23951	Nut	
10	70030301	Roller Catch Arm	
11	430757	Screw	4 required
12	70117607	Kickplate	B, C, I, K, L, P, S, U and Y models; G models starting Serial No. 0707008006; Black
	70117608	Kickplate	GT and GU models through Serial No. 0110002231; H and N models; Gray
13	70126301	Pop Rivet	B, C, I, K, L, P, S, U and Y models; G models starting Serial No. 0707008006; Black; 6 required
	70126401	Pop Rivet	GT and GU models through Serial No. 0110002231; H and N models; Gray; 6 required

*** Add Letter To Designate Color. L - Almond Q - Bisque W - White**

© Copyright, Alliance Laundry Systems LLC – DO NOT COPY or TRANSMIT

Cabinet Limit and Thermistor Assembly

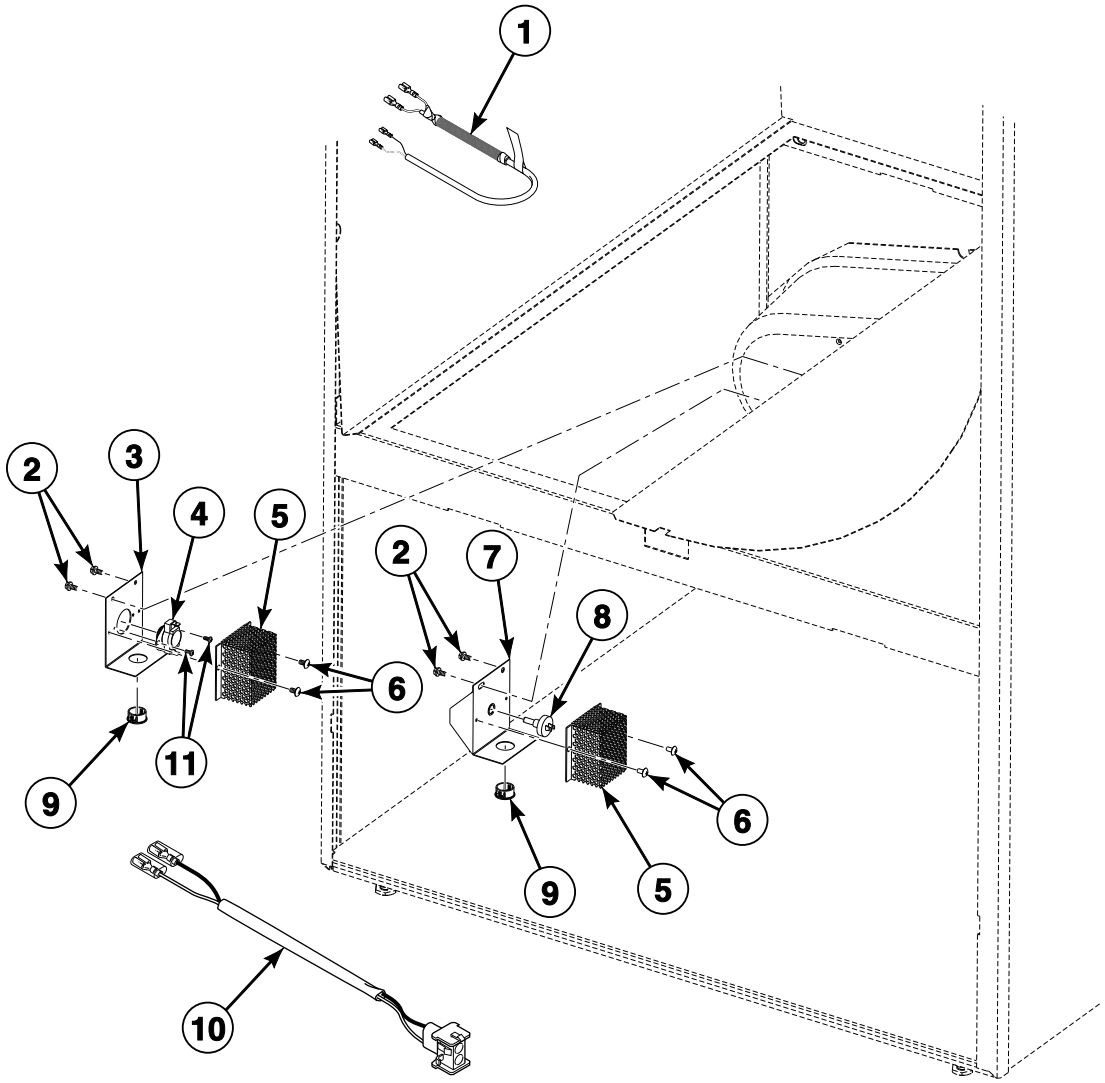

TMB2557P_70409101

© Copyright, Alliance Laundry Systems LLC – DO NOT COPY or TRANSMIT

Cabinet Limit and Thermistor Assembly

REF	PART NO.	DESCRIPTION	COMMENTS
1	M412670	Cabinet Limit Harness Assembly	GU electric and gas models through Serial No. 0110002231; C, H, L, P, S and U CE electric and gas models
	M413693P	Cabinet Limit Harness Assembly	C, H, K, L, N, P, S, U and Y non-CE electric and gas models; GA and GT electric and gas models through Serial No. 0110002231 and starting again Serial No. 0707008006
2	430497	Screw	Electric and gas models
3	M400838	Thermodisc Bracket	Electric and gas models
4	M411813	Limit Thermostat	Electric models
	M410542	Limit Thermostat	Non-CE and non-Australian gas models
	M411941	Manual Reset Thermostat	CE and Australian gas models
	N/A	Cabinet Limit Assembly	Steam models
5	M414477	Thermostat Cover	Electric and gas models
6	M400664	Screw	Electric and gas models
7	44051201	Thermistor Bracket Assembly	
8	M414704	Thermistor	
	B12308601	Temperature Sensor Assembly	PRO HC control replacement; Refer to Parts Information Insert 8-18-251 for list of machine serial numbers
9	M400770	Snap Bushing	Electric and gas models
10	44319901P	Thermistor Cable	
11	M402797	Screw	Electric and gas models

N/A = Part no longer available

© Copyright, Alliance Laundry Systems LLC – DO NOT COPY or TRANSMIT

Cabinet Components

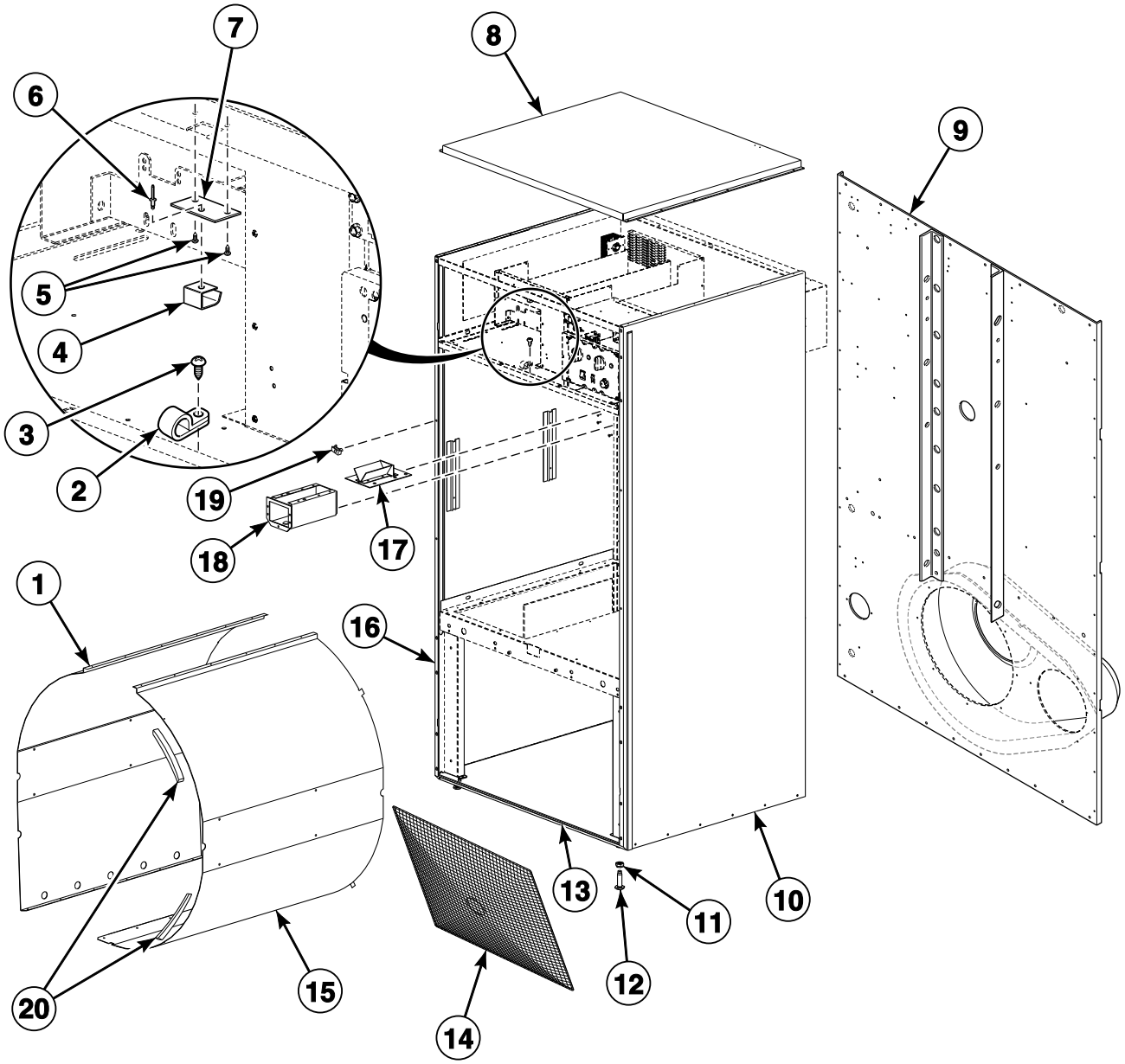

TMB2558P_70409101

© Copyright, Alliance Laundry Systems LLC – DO NOT COPY or TRANSMIT

Cabinet Components

REF	PART NO.	DESCRIPTION	COMMENTS
	298P4P	Spray Paint	White
	297P4	Spray Paint	Almond
	381P4	Spray Paint	Bisque
	382P4	Spray Paint	Cream
	286P4	Spray Paint	Blue
	122P4P	Porcelain Touch-Up Paint	White
	215P4P	Porcelain Touch-Up Paint	Almond
	370P4P	Porcelain Touch-Up Paint	Bisque
	70058501	Pop Rivet	Use with items 10 and 16
	430497	Screw	Use with items 10 and 16
1	44005201	Baffle	Left
2	M404550	Cable Screw Clamp	H, N, S and U models; Models starting Serial No. 0308001308
3	430497	Screw	H, N, S and U models; Models starting Serial No. 0308001308
4	431318	Control Door Latch	
5	431287	Screw	
6	M400003	Pop Rivet	
7	44003201	Latch Mounting Bracket	
8	M414719P	Top Cover Pan	Electric and gas models
	M414759	Top Cover	Steam models except B, C and I models
	M414760	Top Cover	B, C and I steam models
9	N/A	Rear Panel Assembly	
10	44004702*	Side Panel	Models through Serial No. 0308001307; Right
	44056701*	Side Panel	Models starting Serial No. 0308001308; Right
11	21899	Nut	Right
12	70247701	Screw	Leveling leg
13	44000601P	Bottom Pan	
14	44063601	Lint Screen	
15	44004901	Baffle	Right
	44065501	Baffle	Right; Models equipped with fire suppression system
16	44004802*	Side Panel	Models through Serial No. 0308001307; Left
	44056801*	Side Panel and Bracket Assembly	Models starting Serial No. 0308001308; Left
17	70296401	Coin Chute Assembly	Wide; Includes 6 of 70058502 Pop Rivet
18	70180101	Coin Vault Assembly	Includes 5 of 70058502 Pop Rivet
19	70030401	Nut	U-clip
20	70015701	Baffle Gasket	

*** Add Letter To Designate Color. Q - Bisque W - White**

N/A = Part no longer available

© Copyright, Alliance Laundry Systems LLC – DO NOT COPY or TRANSMIT

Door and Hinge Components (Drawing 1 of 2)

H, S and U Models Through Serial No. 0308001307;
L, N, P and Y Models; B, C and I Models Through Serial No. 0703023529;
G Models Through Serial No. 0110002231 and Starting Again Serial No. 0707008006 Through Serial No. 0708020563;
K Models Through Serial No. 0708020563

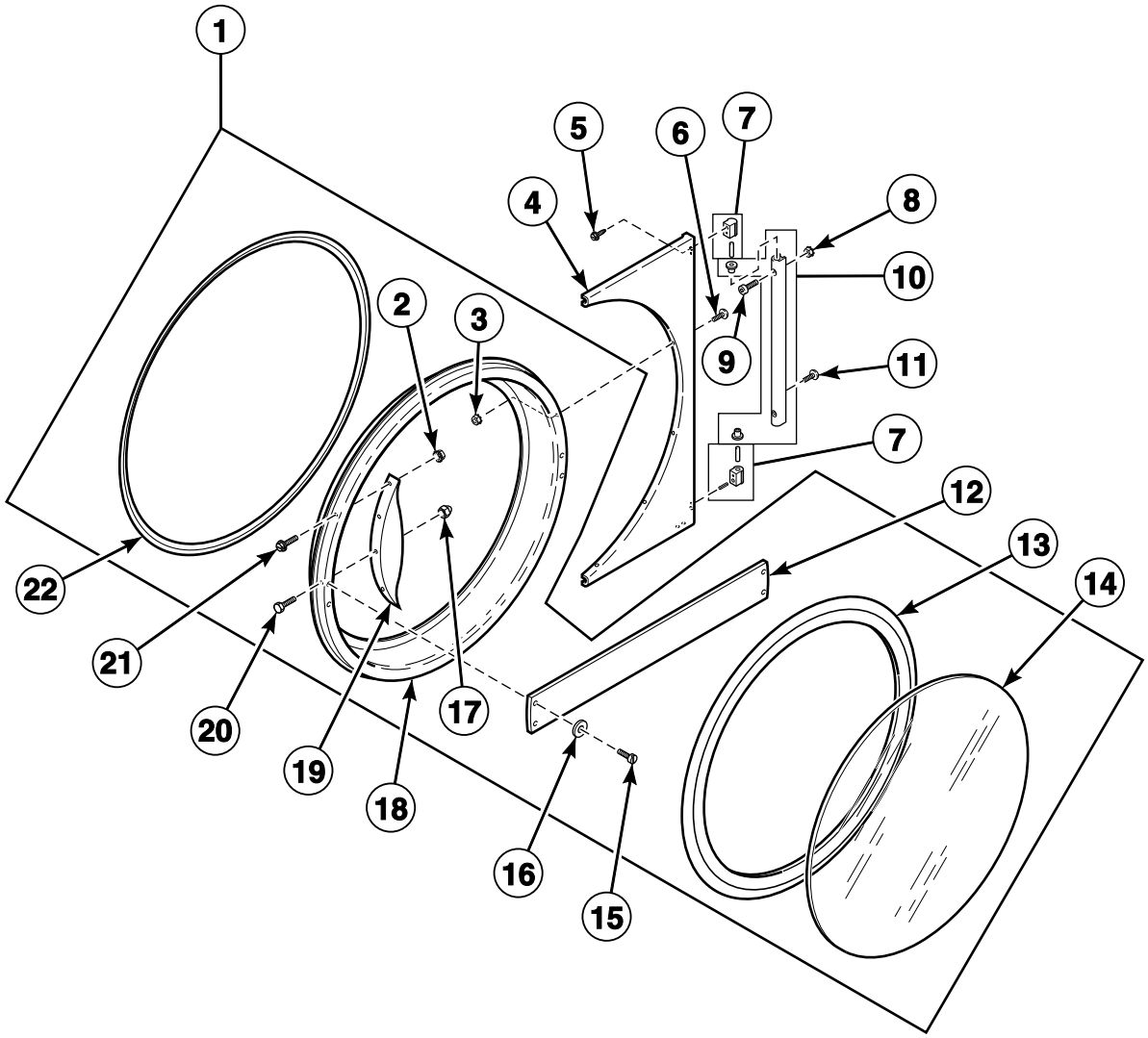

TMB2631P_70409101

© Copyright, Alliance Laundry Systems LLC – DO NOT COPY or TRANSMIT

Door and Hinge Components (Drawing 1 of 2)

REF	PART NO.	DESCRIPTION	COMMENTS
	M4221P4	Door Glass Installation Tool	
1	70212300	Door Assembly	S and U models; Excludes hinge
	44058001P	Door Assembly	H models; Excludes hinge
	70176503	Door Assembly	L models; Excludes hinge
	70212200	Door Assembly	N, P and Y models; GT and GU models through Serial No. 0110002231; Excludes hinge
	44046701	Door Assembly	B, C and I models; Excludes hinge
	70408901P	Door Assembly	G models starting Serial No. 0707008006; K models; Excludes hinge
2	44071201	Nut	H, S and U models; 4 required
3	23951	Nut	6 required
4	70115903B	Door Hinge	G models starting Serial No. 0707008006; K models; Black
	70115903W	Door Hinge	All other models
	70115902	Door Hinge	All other models; Stainless steel
5	70442101	Screw	3 required, 2 in top cam and 1 in bottom cam
6	M400044	Screw	6 required
7	70436202	Door Hinge Cam Assembly	G models starting Serial No. 0707008006; K models
	M4772P3	Hinge Cam Kit	All other models
8	29786	Nut	2 required
9	70409801	Screw	G models starting Serial No. 0707008006; K models; 2 required
	70033504	Screw	All other models; 2 required
10	44035002	Door Hinge Lug Assembly	G models starting Serial No. 0707008006; K models; Includes bushings
	44035001	Door Hinge Lug Assembly	All other models; Includes bushings
11	44023301	Screw	4 required
12	70399502B	Handle Bar	G models starting Serial No. 0707008006; K models
13	70211901P	Door Glass Seal Kit	
14	70133601P	Door Glass	H models
	M400784P	Door Glass	All other models
15	70126301	Pop Rivet	G models starting Serial No. 0707008006; K models; 4 required
16	70409301	Washer	G models starting Serial No. 0707008006; K models; 2 required
17	M414215	Nut	
18	44043501	Door Ring and Handle Assembly	B, C and I models; Includes straight-edged door handle
	70543901	Door Ring Assembly	H, S and U models
	70505703	Door Ring Assembly	N, P and Y models; GT and GU models through Serial No. 0110002231
	70505707B	Door Ring	G models starting Serial No. 0707008006; K models
19	430117	Door Handle	L models
	44057701	Door Handle	H models; Order 70133501P Replacement Door Handle Kit
	44007902P	Door Handle	S and U models
	M400133	Door Handle	N, P and Y models; GT and GU models through Serial No. 0110002231
20	M400661	Screw	Door strike
21	61199	Screw	All models except B, C, I and L models
	430756	Screw	L models; 2 required
	M402585	Screw	L models; 1 required
	M409385	Screw	P models; GT and GU models through Serial No. 0110002231; 2 required
22	70296801	Door Ring Gasket	Notched

*** Add Letter To Designate Color. L - Almond Q - Bisque W - White**

© Copyright, Alliance Laundry Systems LLC – DO NOT COPY or TRANSMIT

Door and Hinge Components (Drawing 2 of 2)

H, L, N, P, S and U Models Starting Serial No. 0308001308;
B and I Models Starting Serial No. 0704000046;
G and K Models Starting Serial No. 0709000027

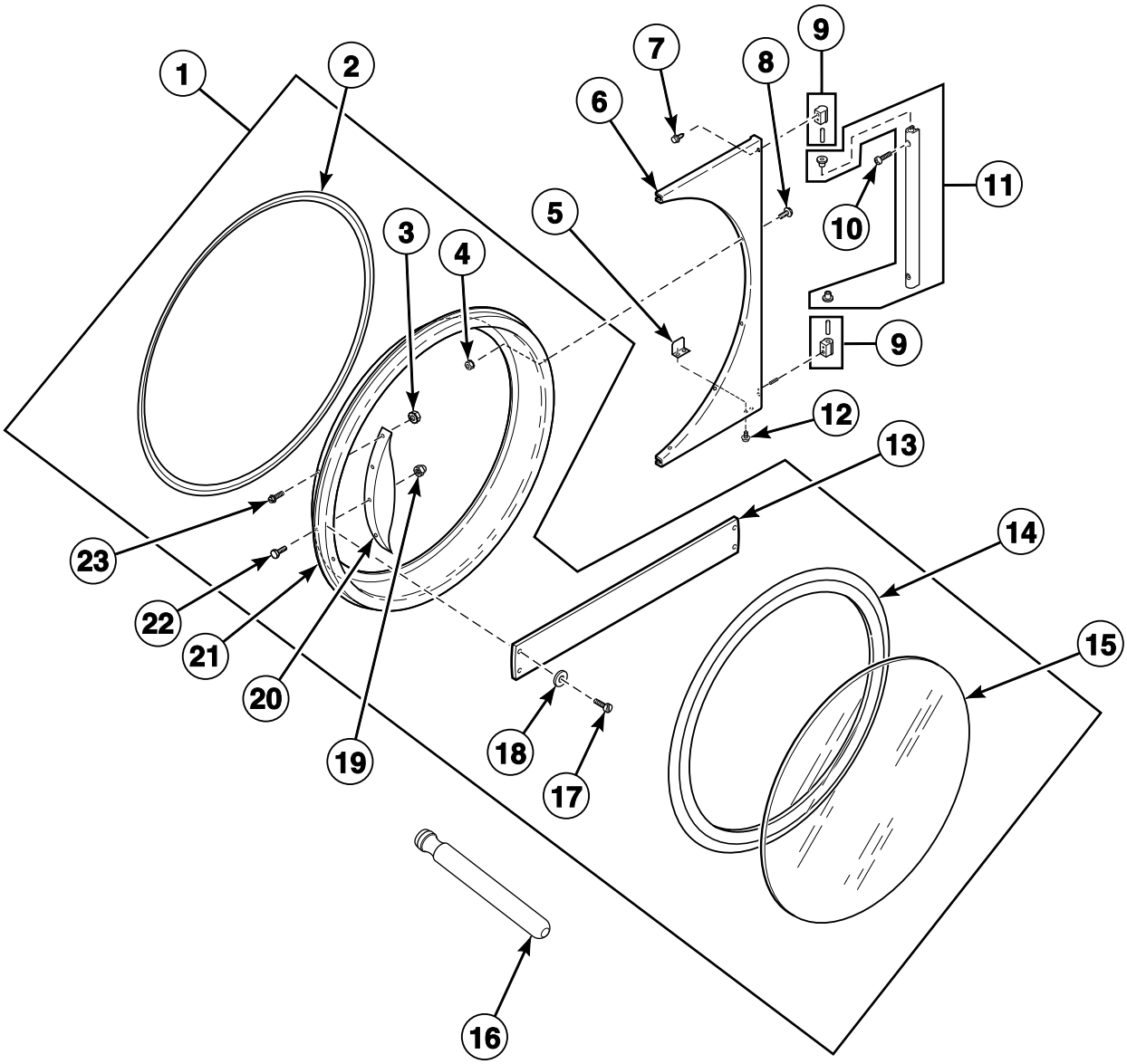

TMB2695P_70409101

© Copyright, Alliance Laundry Systems LLC – DO NOT COPY or TRANSMIT

Door and Hinge Components (Drawing 2 of 2)

REF	PART NO.	DESCRIPTION	COMMENTS
1	44086801P	Door Assembly	N models
	44058102P	Door Assembly	H models
	44028902P	Door Assembly	S and U models
	44112101	Door Assembly	B and I models
	70407401P	Door Assembly	G and K models
2	44008201P	Door Ring Gasket	
3	44071201	Nut	H, S and U models; 4 required
4	23951	Nut	6 required
5	70215001P	Door Switch Actuator Kit	
6	44075208B	Door Hinge Assembly	G and K models
	44075203*	Door Hinge Assembly	All other models
	44075204	Door Hinge Assembly	All other models; Stainless steel
7	70442101	Screw	3 required
8	M400044	Screw	6 required
9	44035102	Door Hinge Cam Assembly	G and K models; Upper
	70436202	Door Hinge Cam Assembly	G and K models
	M4772P3	Hinge Cam Kit	All other models
10	70409801	Screw	G and K models; 2 required
	70033502	Screw	All other models; 2 required
11	44035002	Door Hinge Lug Assembly	G and K models
	44035001	Door Hinge Lug Assembly	All other models; Includes bushings
12	70058501	Pop Rivet	2 required
13	70399501B	Handle Bar	G and K models
14	70211902P	Door Seal Kit	
15	44008402P	Door Glass	H models
	44008401P	Door Glass	All other models
16	M4221P4	Door Glass Installation Tool	
17	70126301	Pop Rivet	G and K models; 4 required
18	70409301	Washer	G and K models; 2 required
19	M414215	Nut	
20	44057702	Door Handle	H and N models
	44007901	Door Handle	S and U models
21	44028902P	Door Assembly	H, L, P, S and U models
	44112001	Door Ring and Handle Assembly	B and I models
	44007703B	Door Ring	G and K models
22	M400661	Screw	Door strike
23	61199	Screw	H, N, S and U models; 4 required

*** Add Letter To Designate Color. L - Almond Q - Bisque W - White**

N/A = Part no longer available

© Copyright, Alliance Laundry Systems LLC – DO NOT COPY or TRANSMIT

Cylinder and Trunnion Components

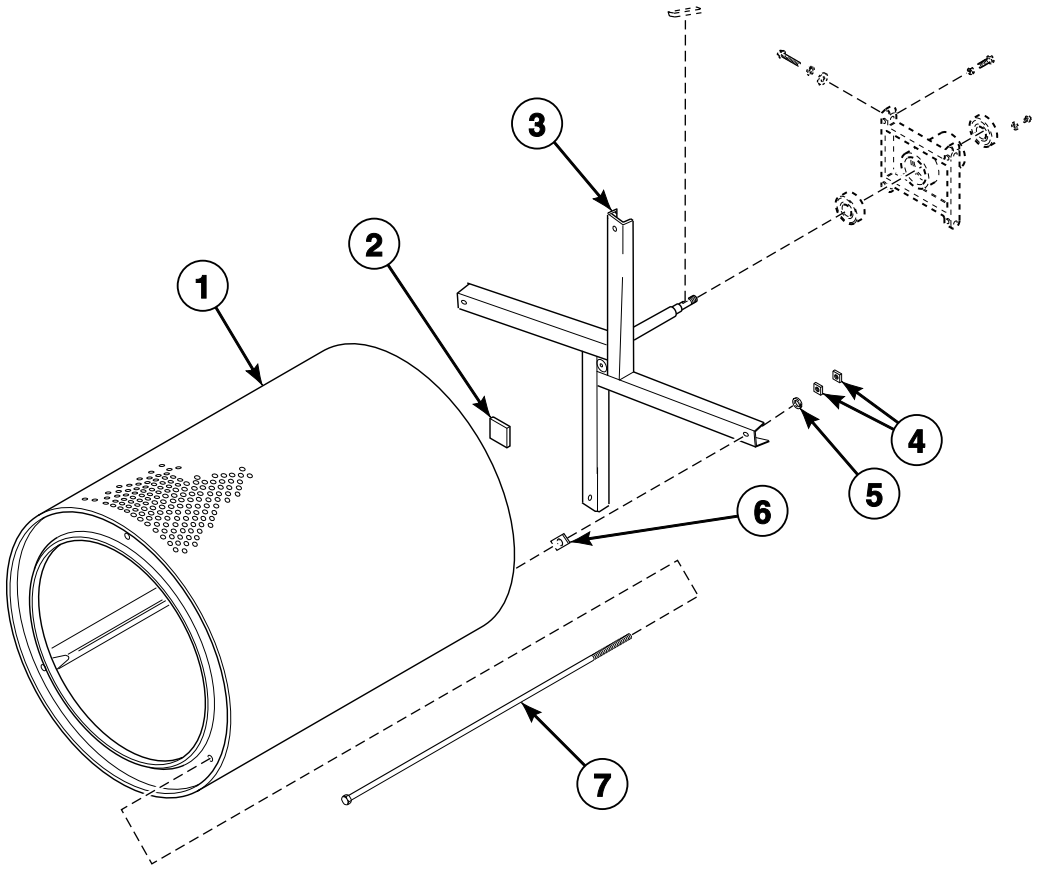

TMB2123P_70409101

© Copyright, Alliance Laundry Systems LLC – DO NOT COPY or TRANSMIT

Cylinder and Trunnion Components

REF	PART NO.	DESCRIPTION	COMMENTS
1	M400439P	Cylinder	Galvanized; B, C, H, I, L, N, P, S, U and Y models through Serial No. 0308001307; GT and GU models through Serial No. 0110002231
	M400440P	Cylinder	Stainless steel; B, C, H, I, L, N, P, S, U and Y models through Serial No. 0308001307; GT and GU models through Serial No. 0110002231
	44057001P	Cylinder Kit	Galvanized; B, C, H, I, L, N, P, S, U and Y models starting Serial No. 0308001308
	44057101P	Cylinder Kit	Stainless steel; B, C, H, I, L, N, P, S, U and Y models starting Serial No. 0308001308
	44130802	Cylinder Assembly	G models starting Serial No. 0707008006; K models
	44089001	Cylinder Assembly	Stainless steel; U models with the 11th character of R
2	M402144	Felt Pad	
3	M413833P	Trunnion Assembly	Spider; Nonreversing; Includes nut; Models through Serial No. 030101089
	44036801P	Trunnion Assembly	Spider; Nonreversing; Includes nuts; Models starting Serial No. 0301001090
	M413834P	Trunnion Assembly	Spider; Reversing; Models starting Serial No. 0308001307
4	M401930	Nut	Nonreversing; 2 required per rod; Models through Serial No. 0308001308
	M404993	Nut	Reversing; 1 required per rod; Nonreversing; Models starting Serial No. 0308001308
5	M400013	Washer	Nonreversing; Models through Serial No. 0308001308
	M400015	Washer	Reversing and nonreversing; Models starting Serial No. 0308001308
6	M401402	Spacer	Adjustment between cylinder and trunnion
7	N/A	Rib Rod	Nonreversing; Models through Serial No. 0308001308
	M401411	Rib Rod	Reversing and nonreversing; Models starting Serial No. 0308001308

N/A = Part no longer available

NOTE: Assemblies and kits are listed in *Cylinder Kits* section and *Trunnion and Bearing Assemblies and Kits* sections.

© Copyright, Alliance Laundry Systems LLC – DO NOT COPY or TRANSMIT

Trunnion Housing Components

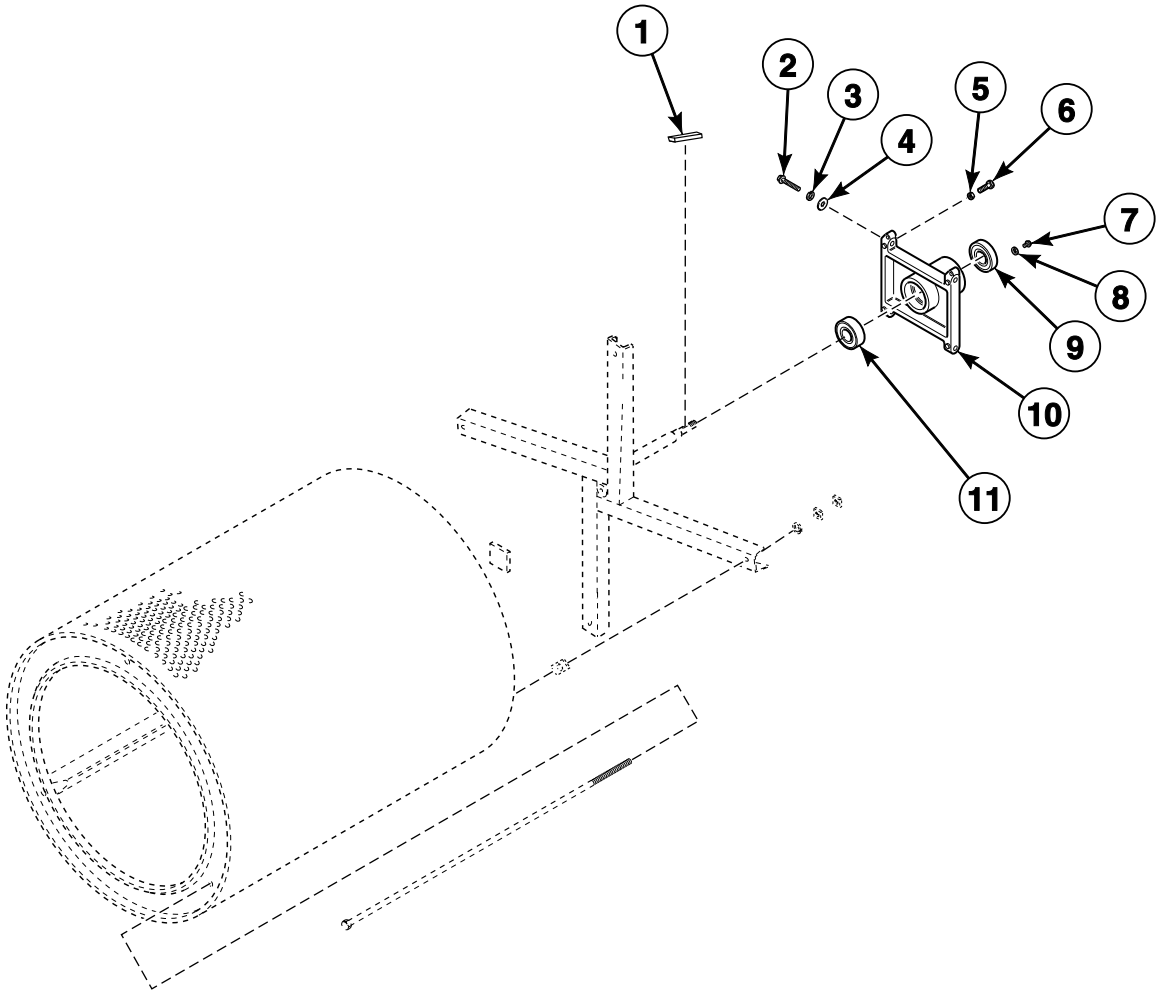

TMB2123PA_70409101

© Copyright, Alliance Laundry Systems LLC – DO NOT COPY or TRANSMIT

Trunnion Housing Components

REF	PART NO.	DESCRIPTION	COMMENTS
1	M400008	Key	Half moon; Nonreversing
	M405232	Key	Straight; Reversing
2	M400063	Screw	4 required
3	M400015	Washer	4 required
4	70261401	Washer	4 required
5	M400026	Nut	4 required
6	M400650	Bolt	2 required
7	70187201	Screw	4 required
8	20103	Washer	4 required
9	M413921P	Ball Bearing	Models through Serial No. 0301001090
	F100136P	Bearing	Models starting Serial No. 0301001090
10	M413826P	Trunnion Housing	Models starting Serial No. 0301001090
11	M413922P	Ball Bearing	Models through Serial No. 0301001090
	44041901P	Ball Bearing	Models starting Serial No. 0301001090

© Copyright, Alliance Laundry Systems LLC – DO NOT COPY or TRANSMIT

Cylinder, Trunnion and Bearing Assemblies and Kits

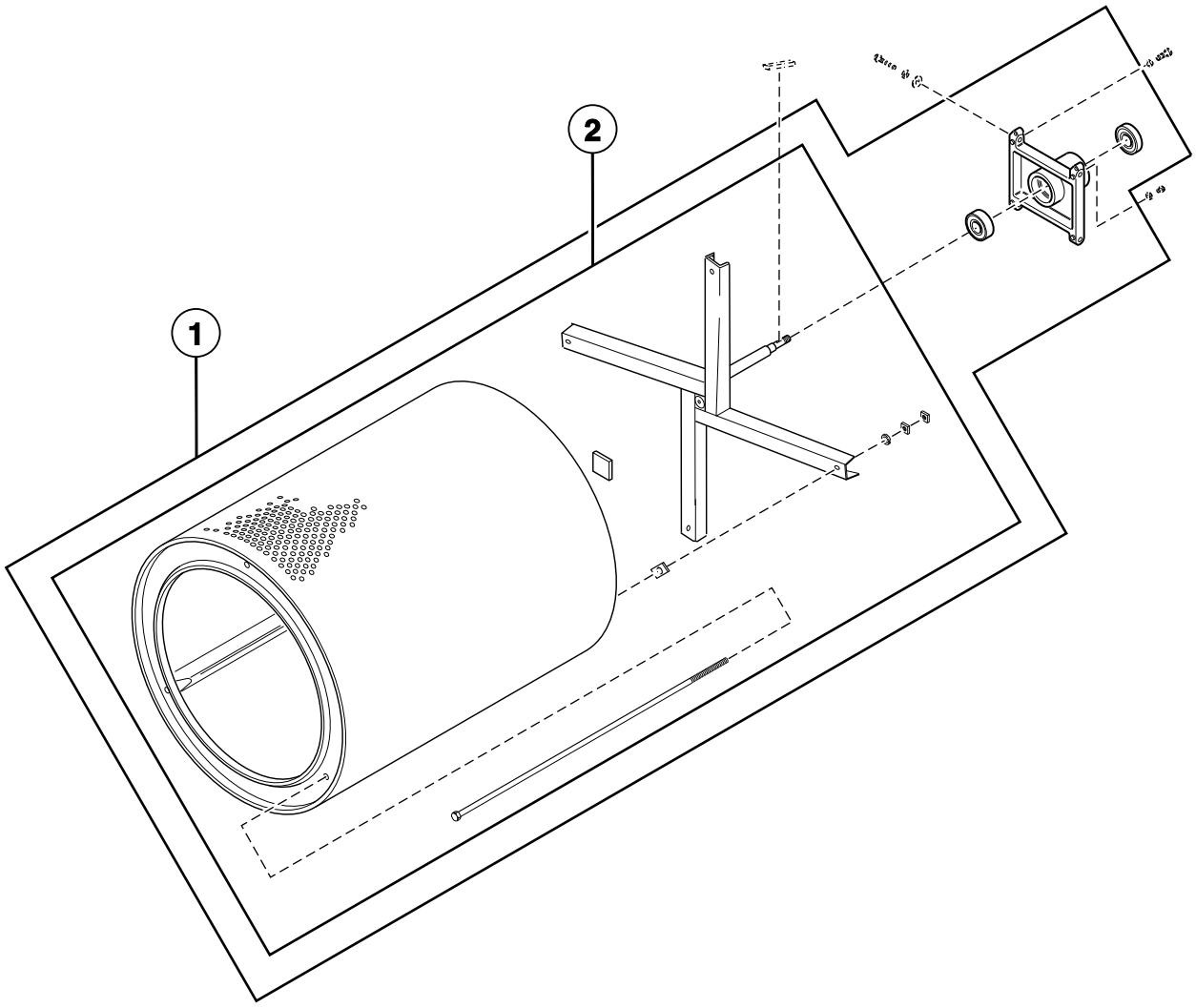

TMB2122PB_70409101

© Copyright, Alliance Laundry Systems LLC – DO NOT COPY or TRANSMIT

Cylinder, Trunnion and Bearing Assemblies and Kits

REF	PART NO.	DESCRIPTION	COMMENTS
1	M4819P3	Cylinder, Trunnion and Bearing Housing Kit	Galvanized; Nonreversing; Retrofit through Serial No. 0308001307; Replacement for B, C, I, L, N and P models starting Serial No. 0308001308
	M4820P3	Cylinder, Trunnion and Bearing Housing Kit	Stainless steel; Nonreversing; Retrofit through Serial No. 0308001307; Replacement for B, C, I, L, N and P models starting Serial No. 0308001308
	M4821P3	Cylinder, Trunnion and Bearing Housing Kit	Galvanized; Reversing; Retrofit through Serial No. 0308001307; Replacement for B, C, I, L, N and P models starting Serial No. 0308001308
	N/A	Cylinder, Trunnion and Bearing Housing Kit	Stainless steel; Reversing; Retrofit through Serial No. 0308001307; Replacement for B, C, I, L, N and P models starting Serial No. 0308001308
2	44057401P	Cylinder and Trunnion Assembly	Galvanized; Nonreversing; H, S and U models starting Serial No. 0308001308; B and I models starting Serial No. 0704000046
	44057402P	Cylinder and Trunnion Assembly	Stainless steel; Nonreversing; H, S and U models starting Serial No. 0308001308; B and I models starting Serial No. 0704000046
	44057403	Cylinder and Trunnion Assembly	Galvanized; Reversing; H, S and U models starting Serial No. 0308001308; B and I models starting Serial No. 0704000046
	44057404	Cylinder and Trunnion Assembly	Stainless steel; Reversing; H, S and U models starting Serial No. 0308001308; B and I models starting Serial No. 0704000046
	44037101	Cylinder and Trunnion Assembly	Galvanized; Reversing; H, S and U models starting Serial No. 0301001089 through 0308001307; L, N and P models starting Serial No. 0301001089
	44037201	Cylinder and Trunnion Assembly	Stainless steel; Reversing; H, S and U models starting Serial No. 0301001089 through 0308001307; L, N and P models starting Serial No. 0301001089
	44068901P	Cylinder and Trunnion Assembly	Galvanized; Nonreversing; H, S and U models starting Serial No. 0301001089 through 0308001307; L, N and P models starting Serial No. 0301001089
	44069001	Cylinder and Trunnion Assembly	Stainless steel; Nonreversing; H, S and U models starting Serial No. 0301001089 through 0308001307; L, N and P models starting Serial No. 0301001089
	44089101	Cylinder and Trunnion Assembly	Stainless steel; U models with the 11th character of R
	44131001	Cylinder and Trunnion Assembly	Reversing; G models starting Serial No. 0707008006 through Serial No. 0708020563; K models through Serial No. 0708020563
	44131002	Cylinder and Trunnion Assembly	Reversing; G and K models starting Serial No. 0709000027
	44131102	Cylinder and Trunnion Assembly	Nonreversing; G and K models

N/A = Part no longer available

NOTE: Individual components are listed in *Cylinder and Trunnion Components* section.

© Copyright, Alliance Laundry Systems LLC – DO NOT COPY or TRANSMIT

Trunnion and Bearing Assemblies

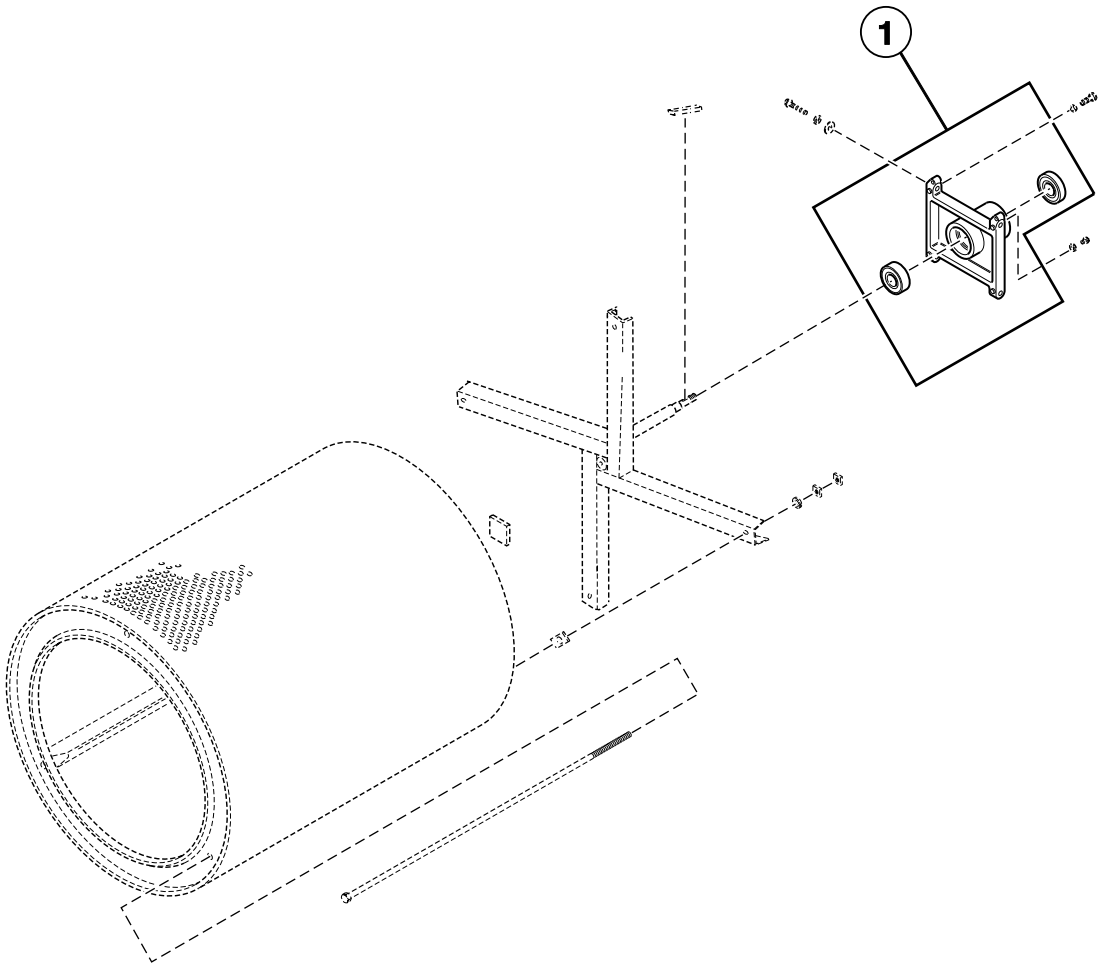

TMB2122PA_70409101

© Copyright, Alliance Laundry Systems LLC – DO NOT COPY or TRANSMIT

Trunnion and Bearing Assemblies

REF	PART NO.	DESCRIPTION	COMMENTS
	M4638P3	Trunnion and Bearing Assembly	Nonreversing; Models through Serial No. 0301001089
	M4639P3	Trunnion and Bearing Assembly	Reversing; Models through Serial No. 0301001089
	M4642P3	Housing and Trunnion Assembly	Includes bearing; Nonreversing; Models through Serial No. 0301001089
	M4643P3	Housing and Trunnion Assembly	Includes bearing; Reversing; Models through Serial No. 0301001089
	M4640P3	Trunnion and Bearing Assembly	Nonreversing; Models starting Serial No. 0301001090
	M4641P3	Trunnion and Bearing Assembly	Reversing; Models starting Serial No. 0301001090
	M4644P3	Housing and Trunnion Assembly	Includes bearing; Nonreversing; Models starting Serial No. 0301001090
	M4645P3	Housing and Trunnion Assembly	Includes bearing; Reversing; Models starting Serial No. 0301001090
1	44375001P	Trunnion Assembly	Includes bearing; Models starting Serial No. 0308001308

NOTE: Individual components are listed in *Cylinder and Trunnion Components* section.

© Copyright, Alliance Laundry Systems LLC – DO NOT COPY or TRANSMIT

Reversing Cylinder Drive Motor and Components

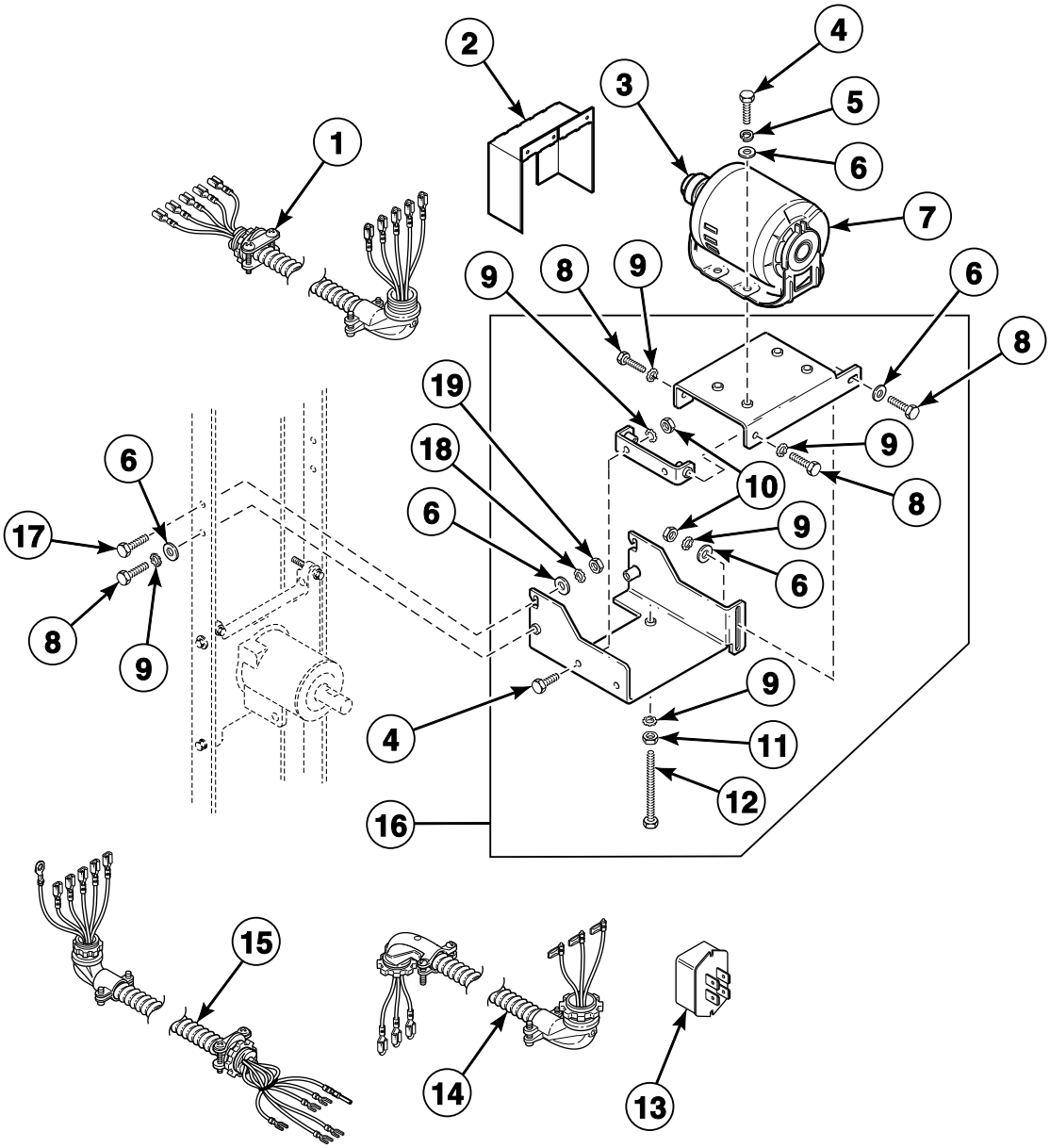

TMB3167P_70409101

© Copyright, Alliance Laundry Systems LLC – DO NOT COPY or TRANSMIT

Reversing Cylinder Drive Motor and Components

REF	PART NO.	DESCRIPTION	COMMENTS
1	M413687	Cylinder Motor Harness Assembly	Non-CE models; 1 Phase
2	M413541	Belt Guard	Upper
3	M414565	Pulley	60 Hertz
	M414567	Pulley	50 Hertz
4	M400057	Screw	6 required
5	M400013	Washer	4 required
6	M400080	Washer	8 required
7	M412519	Motor	Gas and steam models with: 200-208 or 240 Volt/60 Hertz/3 Phase, 460-480 Volt/60 Hertz/3 Phase, 200 Volt/50 Hertz/3 Phase, 230 or 240 Volt/50 Hertz/3 Phase and 380 or 400-415 Volt/50 Hertz/3 Phase; Electric models with: 200-208 Volt/60 Hertz/3 Phase, 240 Volt/50 or 60 Hertz/3 Phase, 480 Volt/60 Hertz/3 Phase, 200 Volt/50 Hertz/3 Phase, 380 Volt/50 Hertz/3 Phase and 400-415/50 Hertz/3 Phase
	M412520P	Motor Kit	Gas and steam models with: 230-240 Volt/50 Hertz/1 Phase; Electric models with: 240 Volt/50 Hertz/1 Phase
8	M400056	Screw	5 required
9	02834	Washer	8 required
10	70142	Nut	3 required
11	02428	Nut	
12	M413565	Screw	
13	M414563	Motor Switch	1 Phase
14	M413688	Cylinder Motor Harness Assembly	Non-CE models; 3 Phase
15	M412745	Cylinder Motor Harness	CE models; 1 Phase
	M412573	Cylinder Motor Harness Assembly	CE models; 3 Phase
16	M413617	Motor Mount Assembly	Includes items 4, 6, 8-12, 18 and 19
17	22688	Screw	2 required
18	M403958	Washer	2 required
19	20274	Nut	2 required

© Copyright, Alliance Laundry Systems LLC – DO NOT COPY or TRANSMIT

Drive Components for Reversing Models

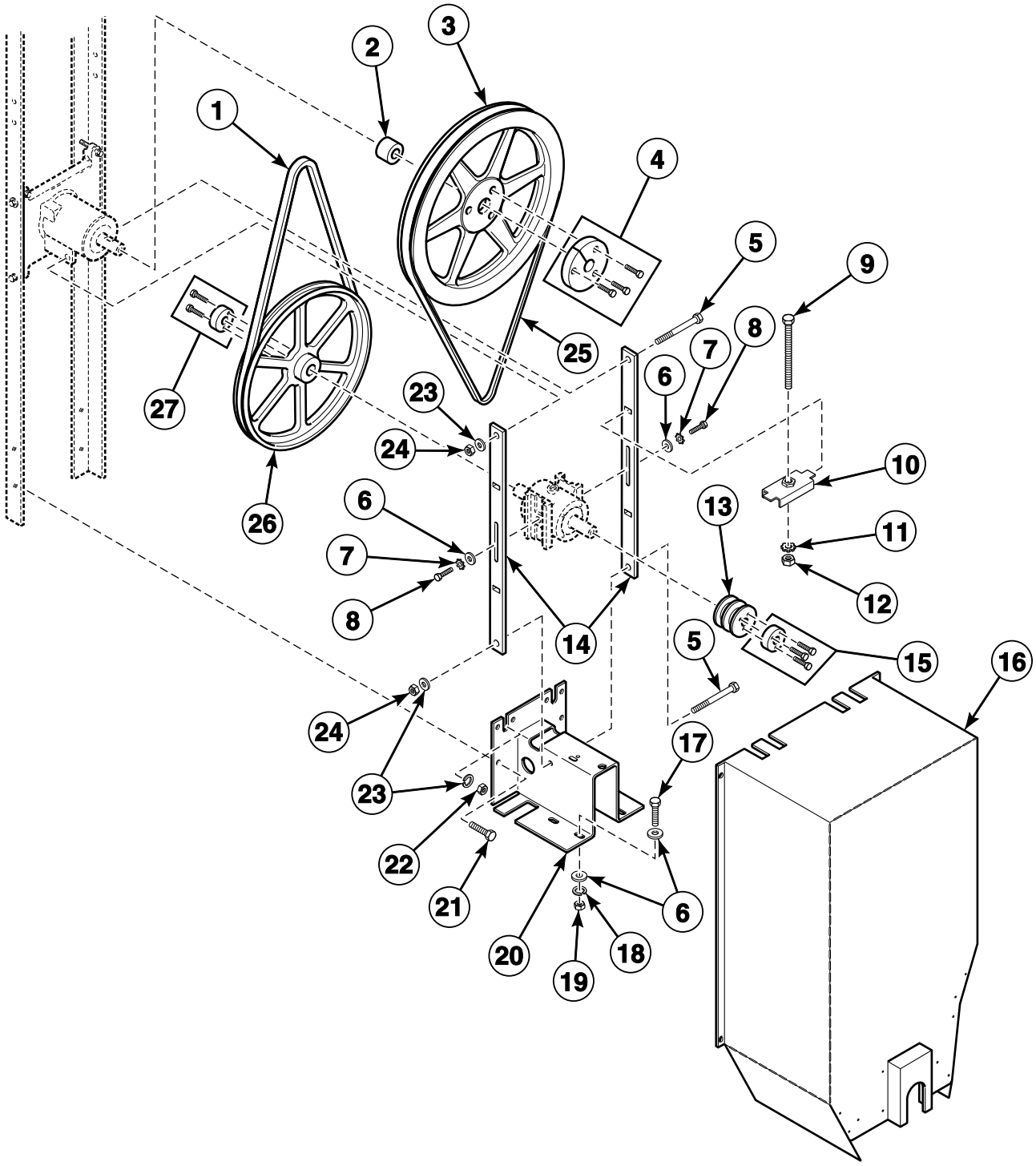

© Copyright, Alliance Laundry Systems LLC – DO NOT COPY or TRANSMIT

Drive Components for Reversing Models

REF	PART NO.	DESCRIPTION	COMMENTS
1	M412981	Belt	Drive
2	44024001	Spacer	
3	M412916	Double V Sheave	
4	M412086P	Bushing	Includes M400013 Washer, 44048902 Screw and 44079203 Screw
5	M400061	Screw	
6	M400080	Washer	
7	M403958	Washer	2 required
8	F430116	Screw	
9	M412627	Screw	
10	M414405	Tension Plate Assembly	
11	M412188	Washer	
12	H88412101	Nut	
13	M412884	Pulley	
14	M412476	Guide Rail	
15	M412917P	Bushing	Includes 56552 Washer, 44048901 Screw and 44079301 Screw
16	44132402	Belt Guard Assembly	
17	M400057	Screw	
18	M400013	Washer	4 required
19	02428	Nut	4 required
20	M411483	Motor Bracket	Models through Serial No. 0707001384
	44117201	Motor Bracket	Models starting Serial No. 0707001385
21	M401393	Bolt	2 required
22	20274	Nut	
23	M400014	Washer	
24	M400026	Nut	2 required
25	M412090	Belt	2 required; Cylinder
26	M412931	Single V Sheave	
27	M412885P	Bushing	Includes 03189 Washer and 44079201 Screw

© Copyright, Alliance Laundry Systems LLC – DO NOT COPY or TRANSMIT

Drive Components for Nonreversing Models

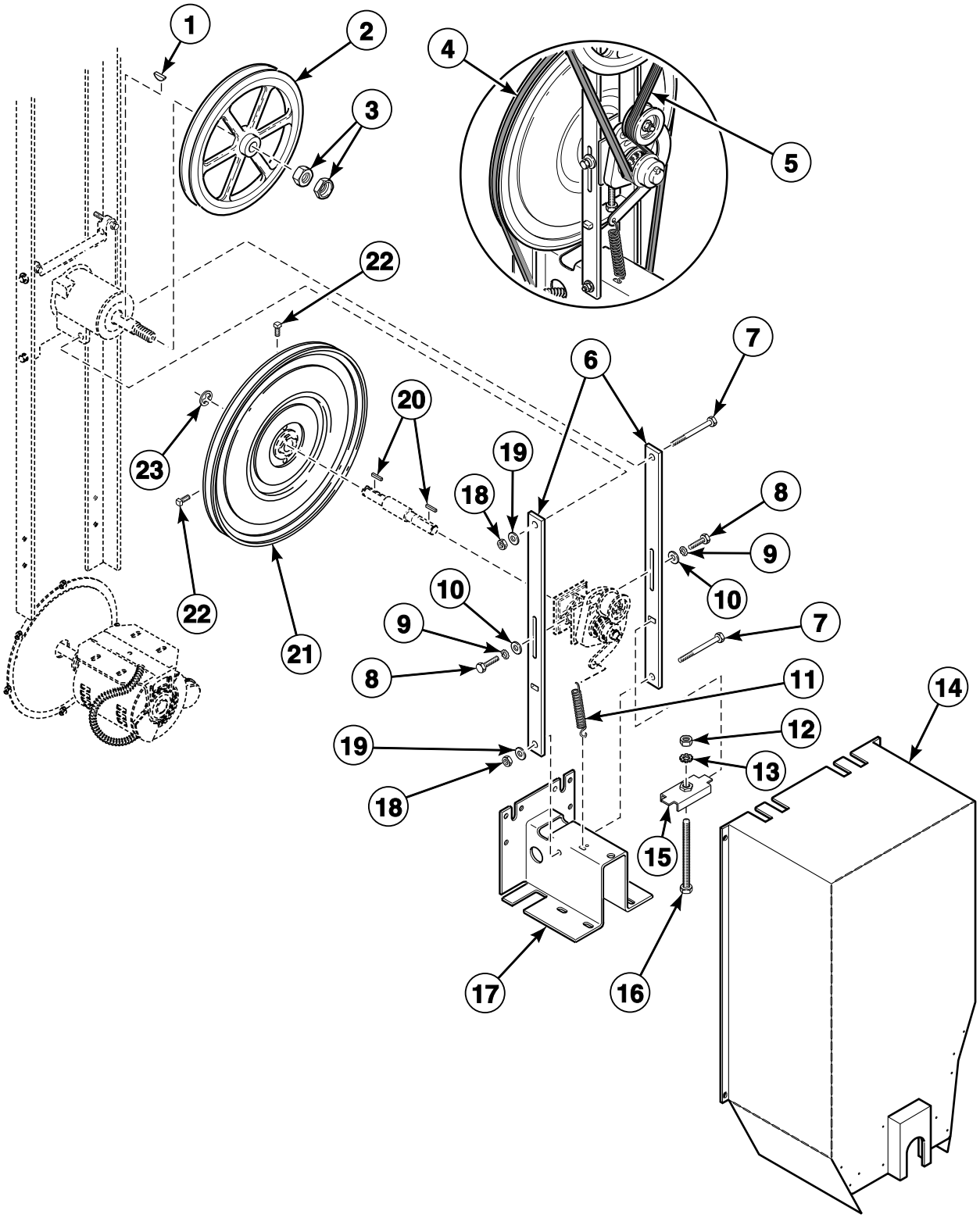

TMB2560P_70409101

© Copyright, Alliance Laundry Systems LLC – DO NOT COPY or TRANSMIT

Drive Components for Nonreversing Models

REF	PART NO.	DESCRIPTION	COMMENTS
1	M400008	Key	
2	M412156	Micro V Sheave	
3	M400033	Nut	
4	M401182P	Belt	
5	M411425P	Micro V Belt	
6	M412476	Guide Rail	
7	M400061	Screw	
8	F430116	Screw	
9	M403958	Washer	
10	M400080	Washer	
11	M412120	Extension Spring	
12	H88412101	Nut	
13	M412188	Washer	
14	44132401	Belt Guard Assembly	Use 51780 Screw for mounting
15	M414405	Tension Plate Assembly	
16	M412627	Screw	
17	M411483	Motor Bracket	Models through Serial No. 0707001384
	44117201	Motor Bracket	Models starting Serial No. 0707001385
18	M400026	Nut	
19	M400014	Washer	
20	M401327	Key	
21	44086901P	Sheave Kit	Includes item 20 and 2 of item 22
22	M400065	Screw	
23	M400399	Ring	

NOTE: On nonreversing models, there is only one motor that functions as the drive motor and fan motor. Refer to *Fan Motors* section for motor part numbers.

© Copyright, Alliance Laundry Systems LLC – DO NOT COPY or TRANSMIT

Idler Housing Assembly for Reversing Models

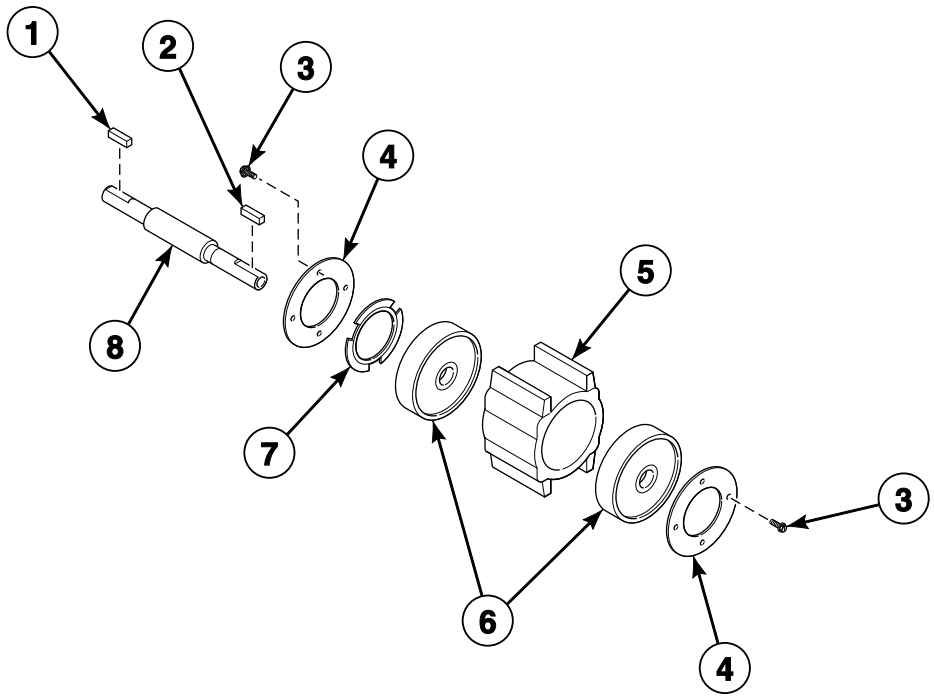

TMB2160P_70409101

© Copyright, Alliance Laundry Systems LLC – DO NOT COPY or TRANSMIT

Idler Housing Assembly for Reversing Models

REF	PART NO.	DESCRIPTION	COMMENTS
	917P3	Idler Housing Kit	Includes items 1-4, 7 and M412476 Guide Rail, M412630 Idler Housing Assembly and 614P3 Idler Assembly Components Kit
1	M401327	Key	
2	M400993	Key	
3	70187201	Screw	8 required
4	M401370	Bearing Retainer	
5	M412612	Idler Housing	
6	M401375P	Ball Bearing	
7	M400401	Loading Spring	
8	M414241	Idler Shaft	

© Copyright, Alliance Laundry Systems LLC – DO NOT COPY or TRANSMIT

Idler Housing Assembly for Nonreversing Models

Models Through 12/3/07

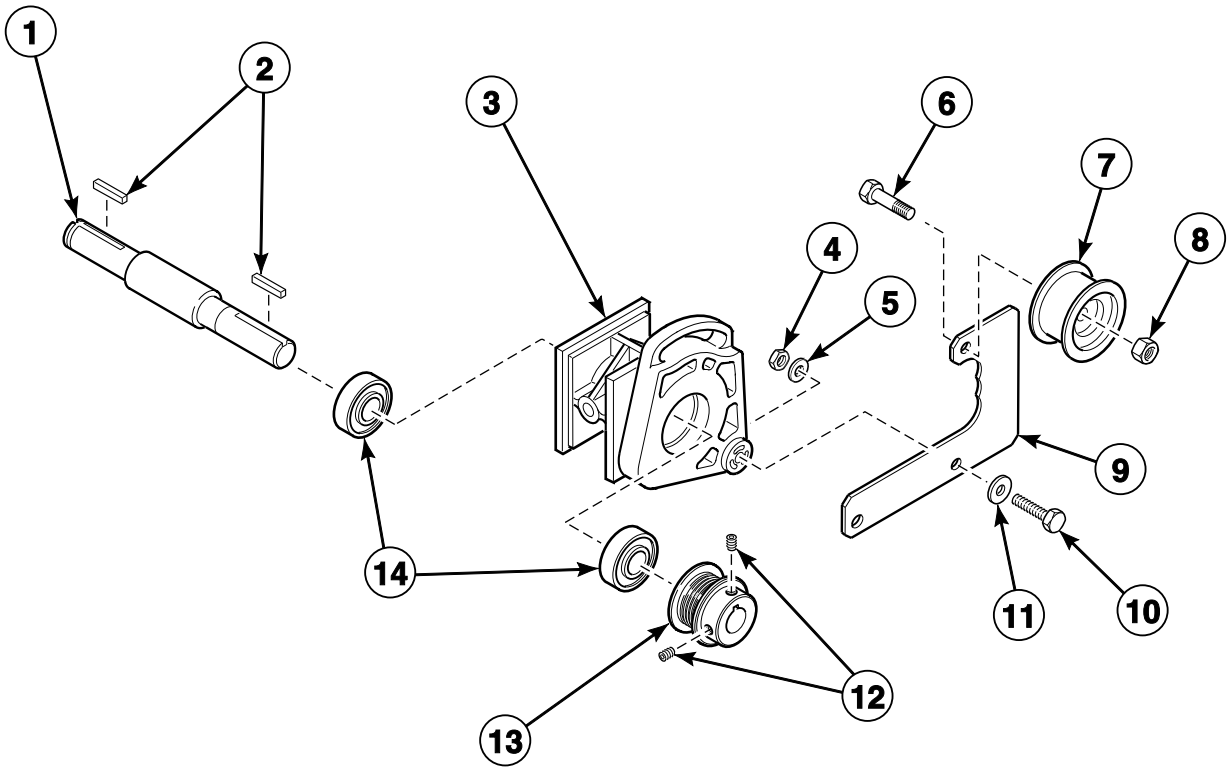

TMB1530P_70409101

© Copyright, Alliance Laundry Systems LLC – DO NOT COPY or TRANSMIT

Idler Housing Assembly for Nonreversing Models

REF	PART NO.	DESCRIPTION	COMMENTS
1	M412223P	Idler Shaft	
2	M401327	Key	2 required
3	943P3P	Idler Housing Kit	Idler with shaft
4	52566	Nut	
5	M405535	Washer	
6	430648	Screw	
7	430619	Drum Idler Wheel Assembly	
8	56156	Nut	
9	M414320P	Idler Arm Kit	Includes 3 of item 11
10	M412119	Bolt	
11	430782	Washer	
12	M400077	Screw	
13	M411466P	Micro V Pulley	
14	70448701	Support Bearing	

© Copyright, Alliance Laundry Systems LLC – DO NOT COPY or TRANSMIT

Idler Assembly for Nonreversing Models

Models Starting 12/4/07

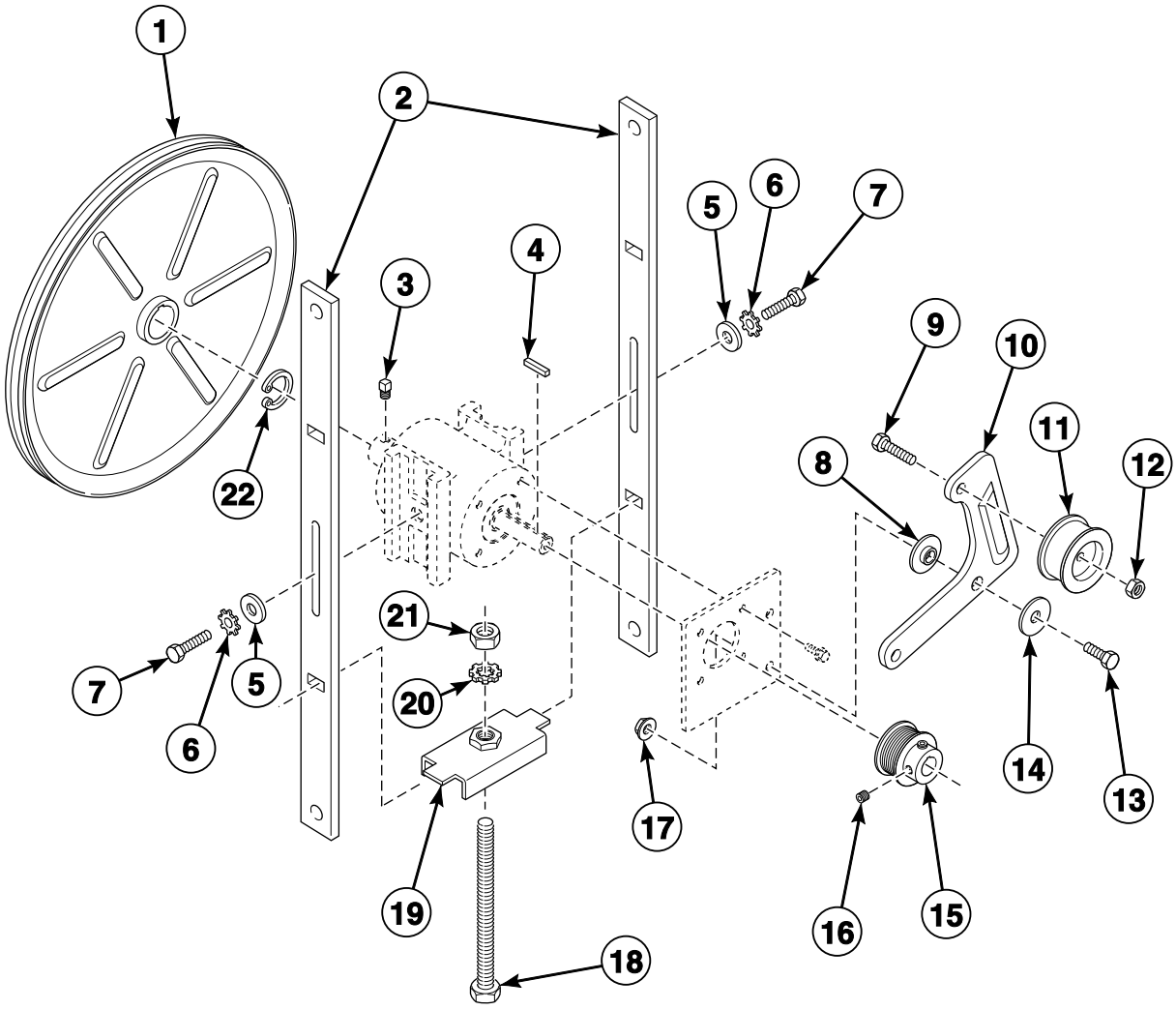

TMB2791P_70409101

© Copyright, Alliance Laundry Systems LLC – DO NOT COPY or TRANSMIT

Idler Assembly for Nonreversing Models

REF	PART NO.	DESCRIPTION	COMMENTS
	942P3P	Idler/Belt Assembly Kit	Use to replace whole assembly
	943P3P	Idler Housing Kit	
1	44086901P	Sheave Kit	
2	M412476	Guide Rail	2 required
3	M400065	Screw	2 required
4	M401327	Key	2 required
5	M400080	Washer	2 required
6	M403958	Washer	2 required
7	F430116	Screw	2 required
8	70265901	Washer	
9	430648	Screw	
10	M414320P	Idler Arm Kit	Models through 12/12/07
	44102701	Idler Arm	Models starting 12/12/07
11	430619	Drum Idler Wheel Assembly	
12	56156	Nut	
13	M400056	Screw	
14	70270301	Washer	
15	M411466P	Micro V Pulley	
16	M400077	Screw	2 required
17	44087201	Nut	
18	M412627	Screw	
19	M414405	Tension Plate Assembly	
20	M412188	Washer	
21	H88412101	Nut	
22	M400399	Ring	

© Copyright, Alliance Laundry Systems LLC – DO NOT COPY or TRANSMIT

Fan Components

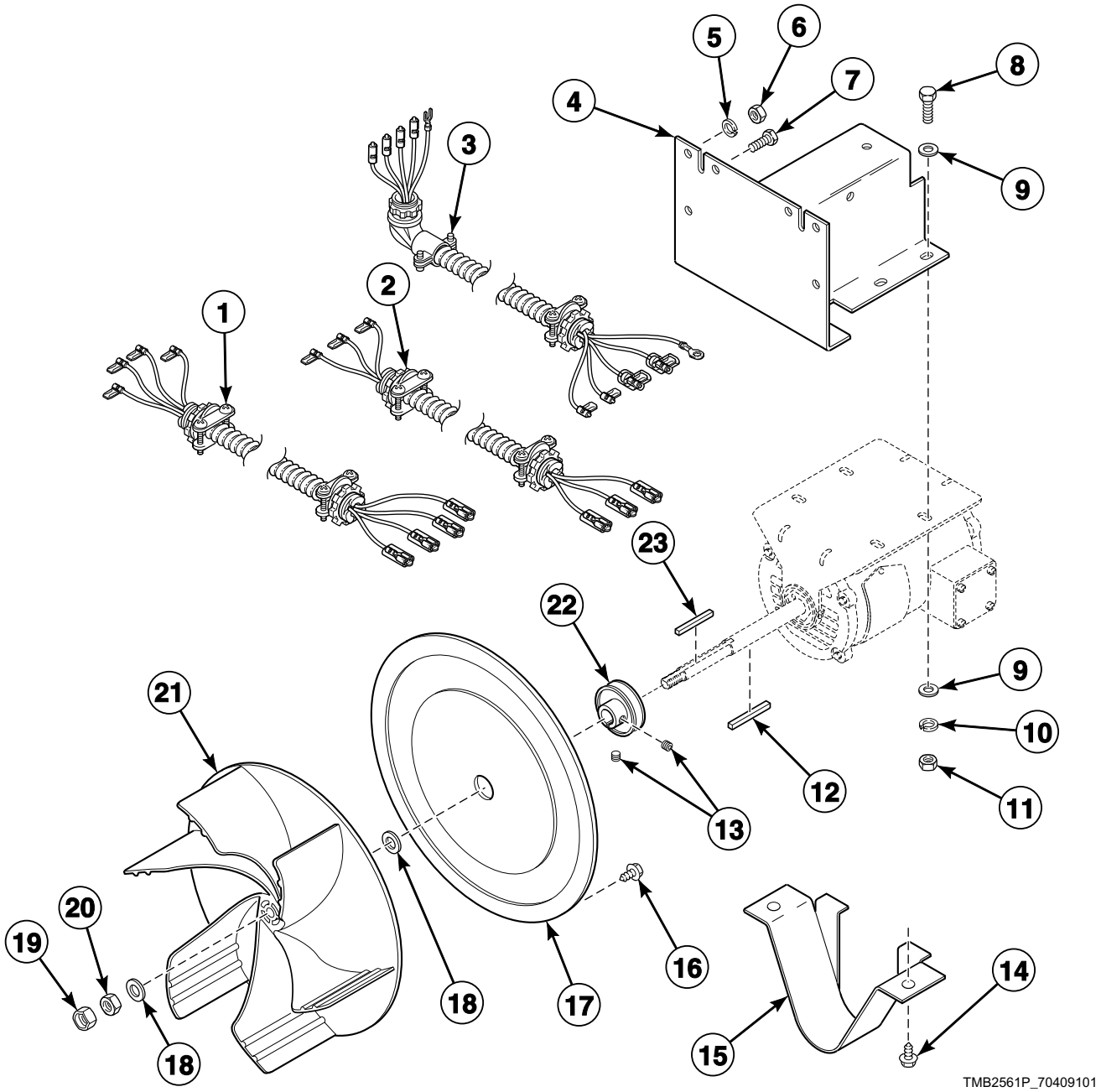

© Copyright, Alliance Laundry Systems LLC – DO NOT COPY or TRANSMIT

Fan Components

REF	PART NO.	DESCRIPTION	COMMENTS
	M4426P3	Motor Hardware Kit	Includes items 12, 18-20 and 23
	M4525P3P	Resilient Ring Kit	2 per package
1	44006101P	Fan Motor Harness	Non-CE models; 120 Volt/60 Hertz/1 Phase and 230 or 240 Volt/50 Hertz/1 Phase
	44006201P	Fan Motor Harness	Non-CE models; Gas and steam: 208-240 Volt/60 Hertz/1 Phase; Electric: 200-208 Volt/60 Hertz/3 Phase, 240 Volt/ 60 Hertz/3 Phase and 240 Volt/50 Hertz/3 Phase
2	M413686	Fan Motor Harness Assembly	Non-CE models; Gas and steam: 200 Volt/50 Hertz/3 Phase and 380 Volt/50 Hertz/3 Phase; Electric: 480 Volt/60 Hertz/3 Phase
3	M413281	Fan Motor Harness Assembly	CE models; 1 Phase
4	M411483	Motor Bracket	Models through Serial No. 0707001384
	44117201	Motor Bracket	Models starting Serial No. 0707001385
5	M400014	Washer	
6	20274	Nut	
7	M401393	Bolt	2 required
8	M400057	Screw	
9	M400080	Washer	
10	M400013	Washer	
11	02428	Nut	
12	44132301	Key	Nonreversing; All models: 120 Volt/60 Hertz/1 Phase or 200-208 or 240 Volt/60 Hertz/1 Phase; Electric models: 200-208 Volt/60 Hertz/3 Phase or 240 Volt/60 Hertz/3 Phase
	M400993	Key	All other voltages
13	M400077	Screw	Supplied with pulley
14	430497	Screw	
15	M413008	Belt Guard	
16	M410059	Screw	7 required
17	M401362	Cover Plate	
18	M400991	Washer	
19	M400034	Nut	
20	M400022	Nut	
21	M4936P3	Fan Kit	Includes key
22	M414564	Pulley	60 Hertz; Nonreversing
	M414566	Pulley	50 Hertz; Nonreversing
23	M400994P	Key and Instruction Kit	

© Copyright, Alliance Laundry Systems LLC – DO NOT COPY or TRANSMIT

Fan Motors

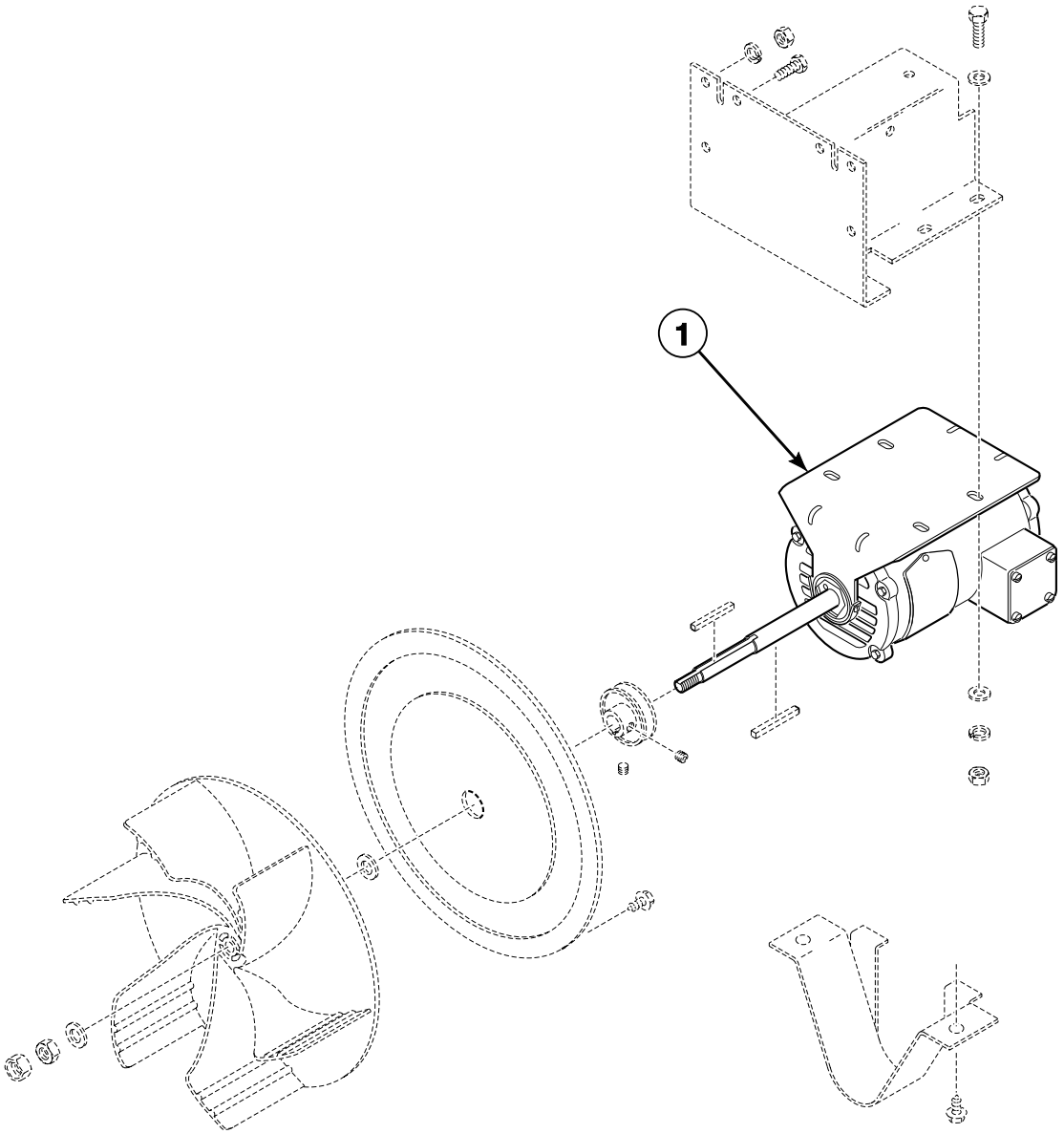

TMB2099P_70409101

© Copyright, Alliance Laundry Systems LLC – DO NOT COPY or TRANSMIT

Fan Motors

REF	PART NO.	DESCRIPTION	COMMENTS
1	44045801P	Motor	Use 44132301 Key for pulley and M400994 Key for fan; Use 70211501 Motor Capacitor; Nonreversing; Gas and steam models with: 120 Volt/60 Hertz/1 Phase and 200-208 or 240 Volt/60 Hertz/1 Phase; Electric models with: 200-208 Volt/60 Hertz/3 Phase and 240 Volt/60 Hertz/3 Phase
	44046101P	Motor	1/2 horsepower; Nonreversing; Gas and steam models with: 200-208 or 240 Volt/60 Hertz/3 Phase, 460-480 Volt/60 Hertz/3 Phase, 200 Volt/50 Hertz/3 Phase, 230-240 Volt/50 Hertz/3 Phase and 380 or 400-415 Volt/50 Hertz/3 Phase; Electric models with: 480 Volt/60 Hertz/3 Phase, 200 Volt/50 Hertz/3 Phase, 380 Volt/50 Hertz/3 Phase and 400-415 Volt/50 Hertz/3 Phase
	44048701P	Motor	Use M410300 Motor Capacitor; Nonreversing; Gas and steam models with: 230-240 Volt/50 Hertz/1 Phase; Electric models with: 240 Volt/50 Hertz/1 or 3 Phase
	44046001P	Fan Motor	1/3 horsepower; Reversing; Gas and steam models with: 200-208 or 240 Volt/50 or 60 Hertz/3 Phase, 460-480 Volt/50 or 60 Hertz/3 Phase, 200 Volt/50 or 60 Hertz/3 Phase, 230-240 Volt/50 Hertz/3 Phase and 380 or 400-415 Volt/50 or 60 Hertz/3 Phase; Electric models with: 480 Volt/50 or 60 Hertz/3 Phase, 380 Volt/50 or 60 Hertz/3 Phase and 400-415 Volt/50 or 60 Hertz/3 Phase
	44045901P	Fan Motor	Use M410301 Motor Capacitor; Reversing; Gas and steam models with: 230-240 Volt/50 Hertz/1 Phase; Electric models with: 240 Volt/50 Hertz/1 or 3 Phase and 200 Volt/50 Hertz/3 Phase
	44045701P	Motor	Use M410296 Motor Capacitor; Reversing; Electric models with: 200-208 Volt/60 Hertz/3 Phase and 240 Volt/60 Hertz/3 Phase

NOTE: Nonreversing motors listed above function as the fan motor and the drive motor.

© Copyright, Alliance Laundry Systems LLC – DO NOT COPY or TRANSMIT

Gas Heater Components (Drawing 1 of 2)

Non-CE and Non-Australian Models Through Serial No. 0208002194;
CE and Australian Models Starting Serial No. 0208002195

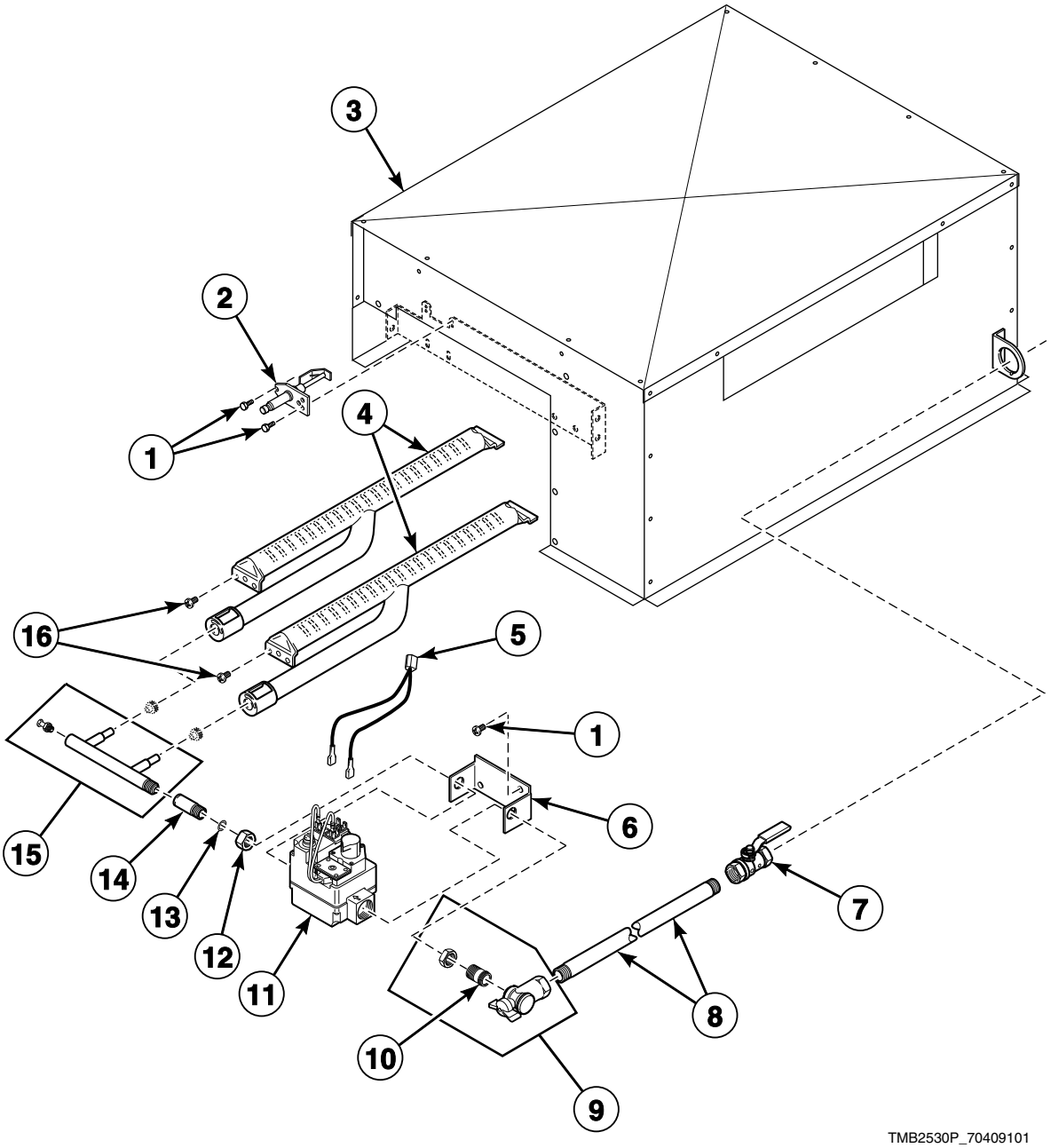

© Copyright, Alliance Laundry Systems LLC – DO NOT COPY or TRANSMIT

Gas Heater Components (Drawing 1 of 2)

REF	PART NO.	DESCRIPTION	COMMENTS
	M4542P3	L.P. Conversion Kit	Natural Gas (N.G.) to Liquid Petroleum Gas (L.P.); CE and Australian models
	M4379P3	L.P. Conversion Kit	N.G. to L.P.; Non-CE and non-Australian models
	M414503	Insulation	Used with item 3
1	430497	Screw	2 required
2	44328701P	Spark Electrode	Non-Australian models
	M410905P	Spark Igniter	Australian models
3	M414795	Stove Assembly	Includes item 4
4	M410541P	Burner Assembly	2 required
5	M412997	Harness Assembly	Non-CE and non-Australian models
	M413650	Gas Valve Harness Assembly	CE and Australian models
6	M406814	Gas Valve Bracket	
7	M412562P	Gas Shut-Off Valve	CE models
8	M400749	Pipe	
9	M4983P3	Shut-Off Valve Kit	
10	44092201	Tailpiece	1/2 inch NPT; Models starting Serial No. 05040000256
	44092202	Tailpiece	1/2 inch BPT; Models starting Serial No. 05040000256
11	M410907P	Gas Valve	N.G.; Australian models
	M410908	Gas Valve	L.P.; Australian models
	M413332P	Gas Valve	N.G.; CE models
	M4909P3	Valve Replacement Kit	L.P.; CE models
	44138701P	Gas Valve Kit	L.P.; 50 Hertz; Non-CE models
	M4897P3	L.P. Gas Valve Kit	L.P.; 60 Hertz; Non-CE models
	44154501P	Gas Valve	N.G.; Non-CE models
	44042901P	Gas Valve Coil	60 Hertz; 24 Volt; Non-CE and non-Australian models
12	M401548	Nut	
13	M400605	Anti-Torque Ring	
14	M413395	Manifold Pipe Assembly	CE models
	44040501	Manifold Pipe	B, C and I non-CE and non-Australian models
	M406681	Manifold Pipe Assembly	All other models
15	M410546	Spud Holder Assembly	
16	70240301	Screw	4 required

NOTE: For CE gas and orifice information, refer to Installation Manual.

© Copyright, Alliance Laundry Systems LLC – DO NOT COPY or TRANSMIT

Gas Heater Components (Drawing 2 of 2)

Non-CE and Non-Australian Models Starting Serial No. 0208002195

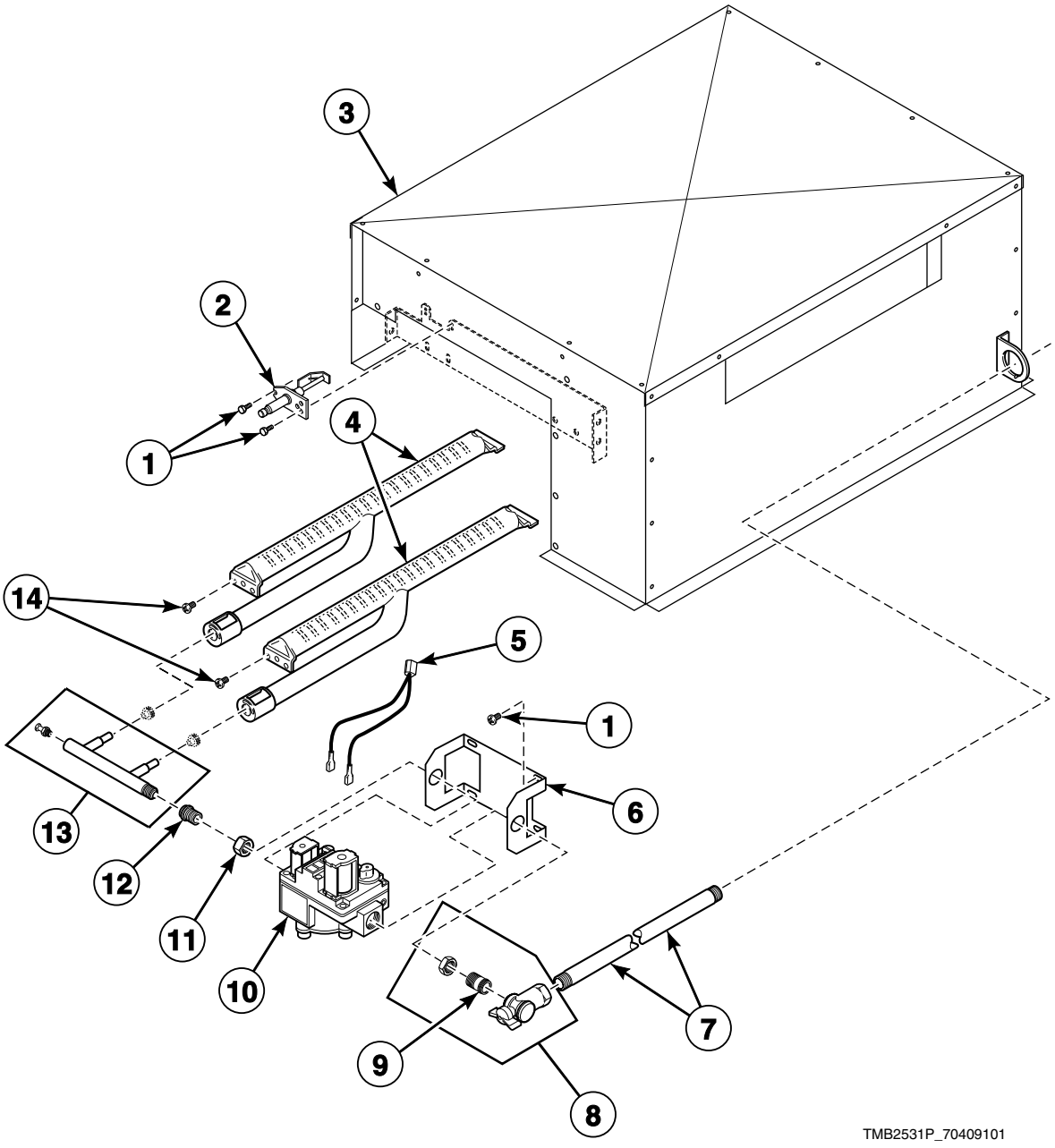

© Copyright, Alliance Laundry Systems LLC – DO NOT COPY or TRANSMIT

Gas Heater Components (Drawing 2 of 2)

REF	PART NO.	DESCRIPTION	COMMENTS
	M4379P3	L.P. Conversion Kit	Natural Gas (N.G.) to Liquid Petroleum Gas (L.P.)
	M414503	Insulation	Used with item 3
1	430497	Screw	2 required
2	44328701P	Spark Electrode	
3	M414795	Stove Assembly	Includes item 4
4	M410541P	Burner Assembly	2 required
5	M412997	Harness Assembly	
6	44040401	Gas Valve Bracket	
7	M400749	Pipe	
8	M4983P3	Shut-Off Valve Kit	
9	44092201	Tailpiece	1/2 inch NPT; Models starting Serial No. 0504000256
	44092202	Tailpiece	1/2 inch BPT; Models starting Serial No. 0504000256
10	44154501P	Gas Valve	N.G.
	44154502P	Gas Valve	L.P.
11	M401548	Nut	
12	44040501	Manifold Pipe	
13	M410546	Spud Holder Assembly	
14	70240301	Screw	4 required

© Copyright, Alliance Laundry Systems LLC – DO NOT COPY or TRANSMIT

Burner Orifices for Non-CE Models

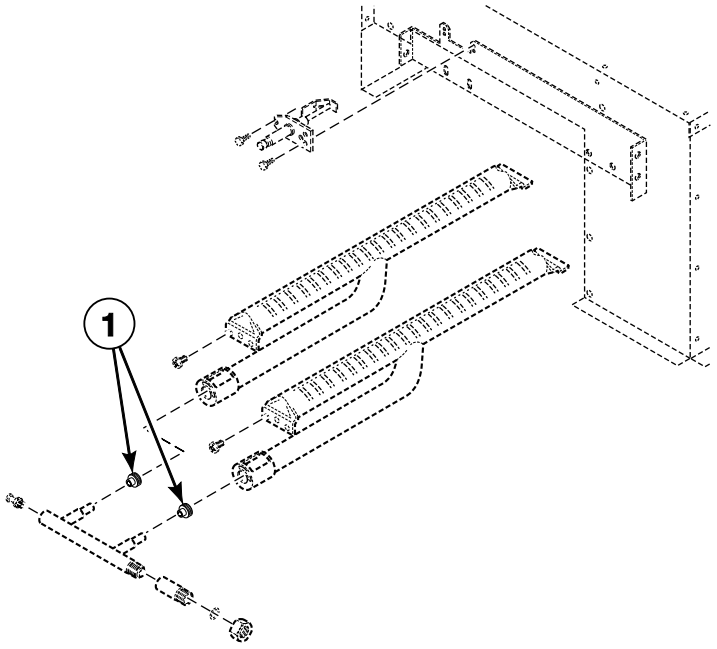

TMB2532P_70409101

© Copyright, Alliance Laundry Systems LLC – DO NOT COPY or TRANSMIT

Burner Orifices for Non-CE Models

REF	PART NO.	DESCRIPTION	COMMENTS
1	70684100	Burner Orifice	Blank
	70684112	Burner Orifice	Liquid Petroleum Gas (L.P.); Drill no. 43 (2.3 mm); 0-2,000 feet; 2 required
	70684110	Burner Orifice	L.P.; Drill no. 44 (2.2 mm); 2,001-4,000 feet; 2 required
	70684109	Burner Orifice	L.P.; Drill no. 45 (2.1 mm); 4,001-6,000 feet; 2 required
	70684107	Burner Orifice	L.P.; Drill no. 47 (2.0 mm); 6,001-8,000 feet; 2 required
	70684106	Burner Orifice	L.P.; Drill no. 48 (1.9 mm); 8,001-10,000 feet; 2 required
	70684136	Burner Orifice	Natural Gas (N.G.); Drill no. 26 (3.7 mm); 0-2,000 feet; 2 required
	70684134	Burner Orifice	N.G.; Drill no. 28 (3.6 mm); 2,001-4,000 feet; 2 required
	70684132	Burner Orifice	N.G.; Drill no. 29 (3.4 mm); 4,001-6,000 feet; 2 required
	70684129	Burner Orifice	N.G.; Drill no. 30 (3.3 mm); 6,001-10,000 feet; 2 required

NOTE: For CE gas and orifice information, refer to Installation Manual.

© Copyright, Alliance Laundry Systems LLC – DO NOT COPY or TRANSMIT

Gas Heater Components - Rear View

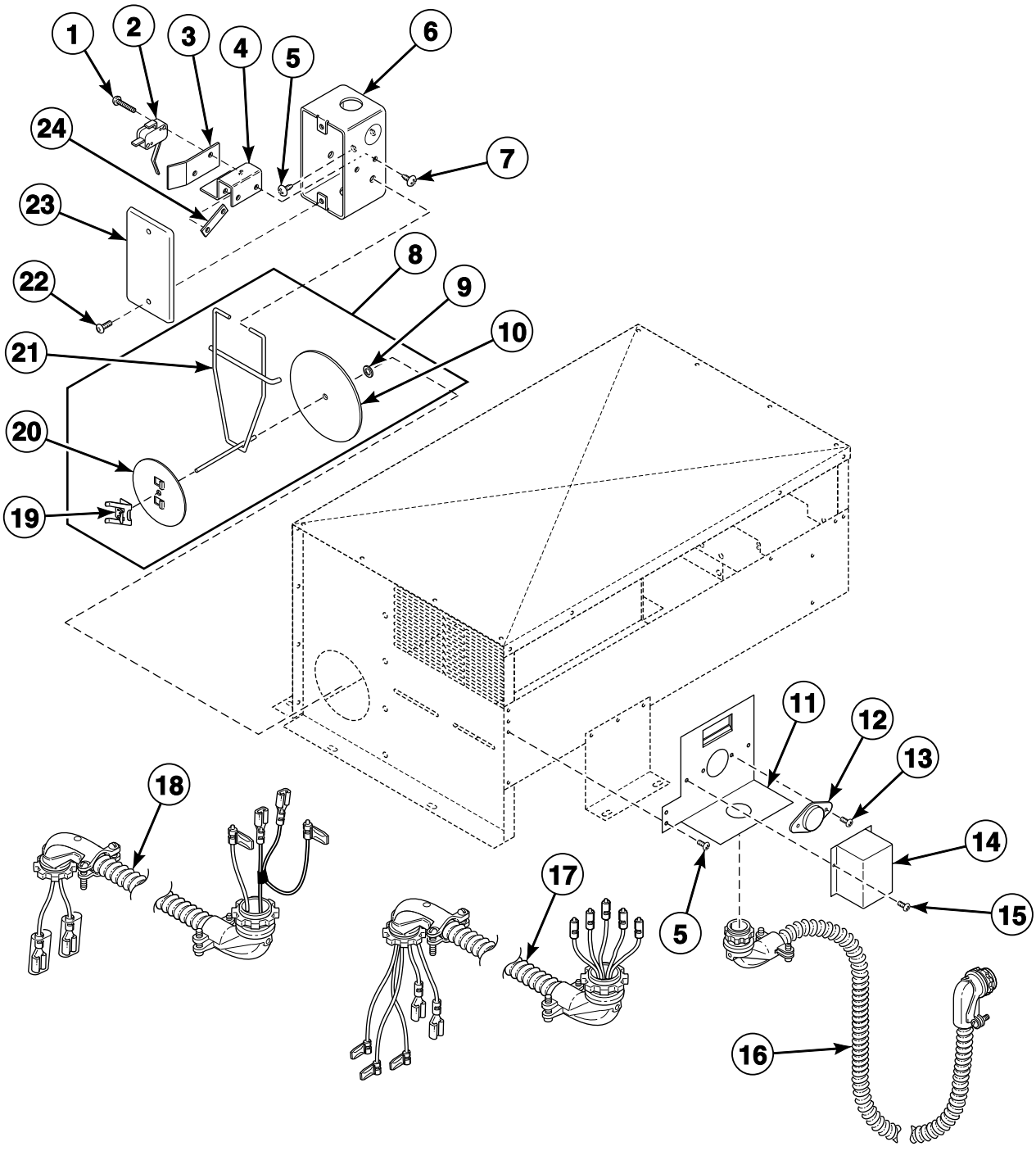

© Copyright, Alliance Laundry Systems LLC – DO NOT COPY or TRANSMIT

Gas Heater Components - Rear View

REF	PART NO.	DESCRIPTION	COMMENTS
1	M401938	Screw	
2	M400944	Airflow Switch	Non-CE models
	M412423	Actuator Switch	CE models
3	M400712	Airflow Switch Insulator Barrier	
4	M409202	Airflow Switch Bracket	
5	430497	Screw	2 required
6	M403235	Airflow Switch Handy Box	
7	M400664	Screw	
8	M400541	Vane Assembly	
9	M400977	Nut	
10	M400253	Vane	
11	M402798	Thermostat Bracket	
12	M409433	Limit Thermostat	Non-Australian models
	M411938	Manual Reset Thermostat	Australian models
13	M402797	Screw	2 required
14	M414477	Thermostat Cover	
15	M400664	Screw	2 required
16	M412609	Stove Limit Harness Assembly	
17	M412635	Harness Assembly	Airflow switch; CE models
18	M413690	Harness Assembly	Airflow switch; Non-CE models
19	M400976	Clip	
20	M400822	Counterweight	
21	M400753	Airflow Switch Vane Lever	
22	M400072	Screw	2 required
23	J1075621	Electric Box Cover	
24	M400979	Nut	

© Copyright, Alliance Laundry Systems LLC – DO NOT COPY or TRANSMIT

Electric Heater Components for Non-CE Models

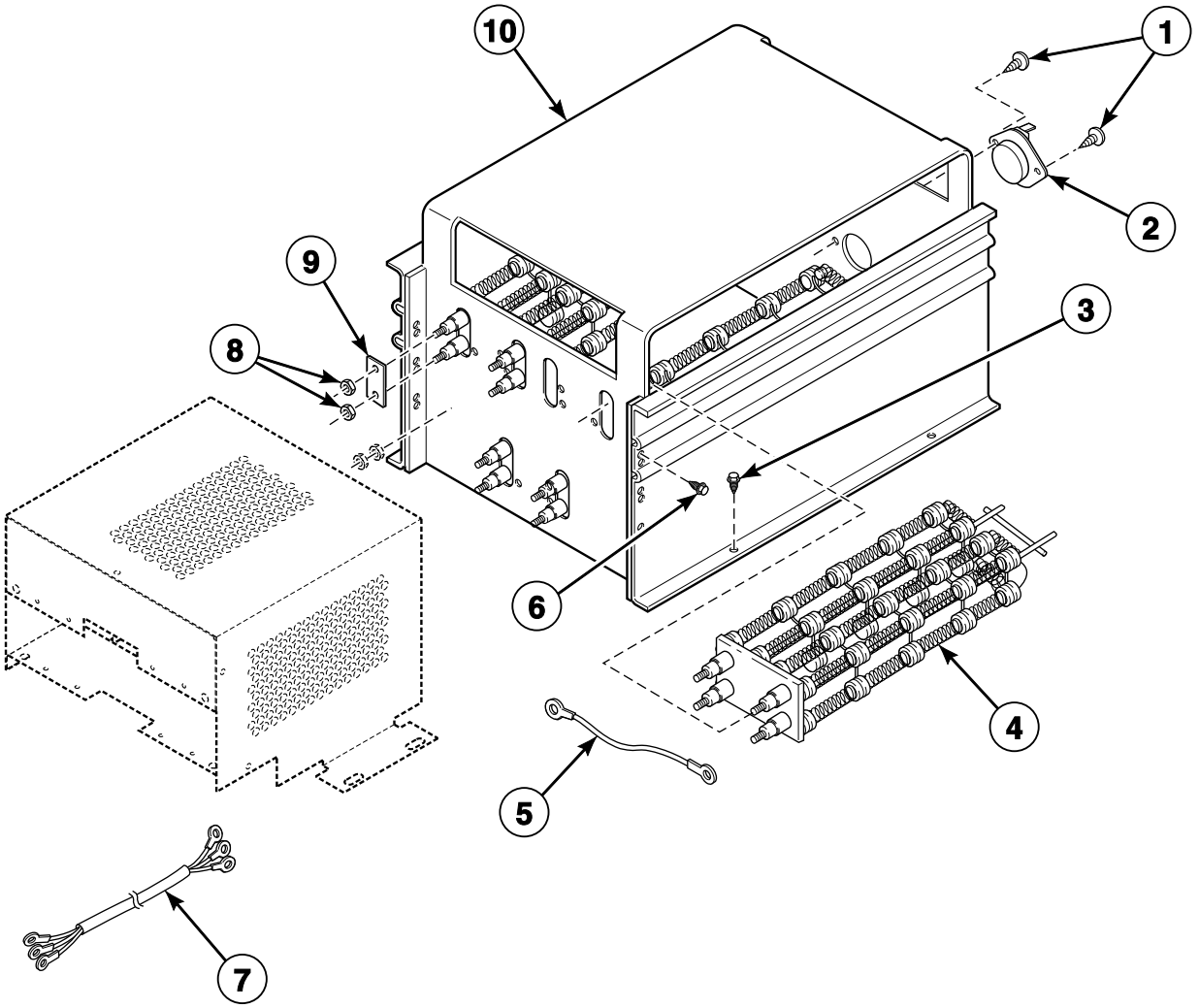

TMB1249P_70409101

© Copyright, Alliance Laundry Systems LLC – DO NOT COPY or TRANSMIT

Electric Heater Components for Non-CE Models

REF	PART NO.	DESCRIPTION	COMMENTS
1	33562	Screw	
2	M410220	Limit Thermostat	30 kW; 3 Phase
	M409433	Limit Thermostat	21 kW; 240 Volt/50 Hertz/1 Phase
3	430497	Screw	
4	M410939P	Heater Element	10 kW; 240 Volt; 3 required for 240 Volt/60 Hertz/3 Phase, 400-415 Volt/50 Hertz/3 Phase and 480 Volt/60 Hertz/3 Phase
	M410940P	Heater Element	10 kW; 208 Volt; 3 required for 200 Volt/50 Hertz/3 Phase and 200-208 Volt/60 Hertz/3 Phase
	M410941P	Heater Element	10 kW; 220 Volt; 3 required for 380 Volt/50 Hertz/3 Phase
	M412955P	Heater Element	7 kW; 240 Volt; 3 required for 240 Volt/50 Hertz/1 Phase
5	M412287	Jumper Wire Assembly	1 required for 380 Volt/50 Hertz/3 Phase and 400-415 Volt/50 Hertz/3 Phase; 2 required for 480 Volt/60 Hertz/3 Phase
6	70240301	Screw	
7	M413959	Heater Cable Assembly	H1-H3; 200 Volt/50 Hertz/3 Phase, 200-208 Volt/60 Hertz/3 Phase, 240 Volt/60 Hertz/3 Phase, 380 Volt/50 Hertz/3 Phase, 400-415 Volt/50 Hertz/3 Phase, 480 Volt/60 Hertz/3 Phase and 240 Volt/50 Hertz/1 Phase
	M413960	Heater Cable Assembly	H4-H6; 200 Volt/50 Hertz/3 Phase, 200-208 Volt/60 Hertz/3 Phase, 240 Volt/60 Hertz/3 Phase and 240 Volt/50 Hertz/1 Phase
8	70054	Nut	
9	M400866	Jumper Bar	380 Volt/50 Hertz/3 Phase, 400-415 Volt/50 Hertz/3 Phase and 480 Volt/60 Hertz/3 Phase
	M400869	Jumper Strip	3 required for 480 Volt/60 Hertz/3 Phase; 6 required for all others
10	M414825	Electric Heater Cabinet Assembly	

© Copyright, Alliance Laundry Systems LLC – DO NOT COPY or TRANSMIT

Electric Heater Components for CE Models

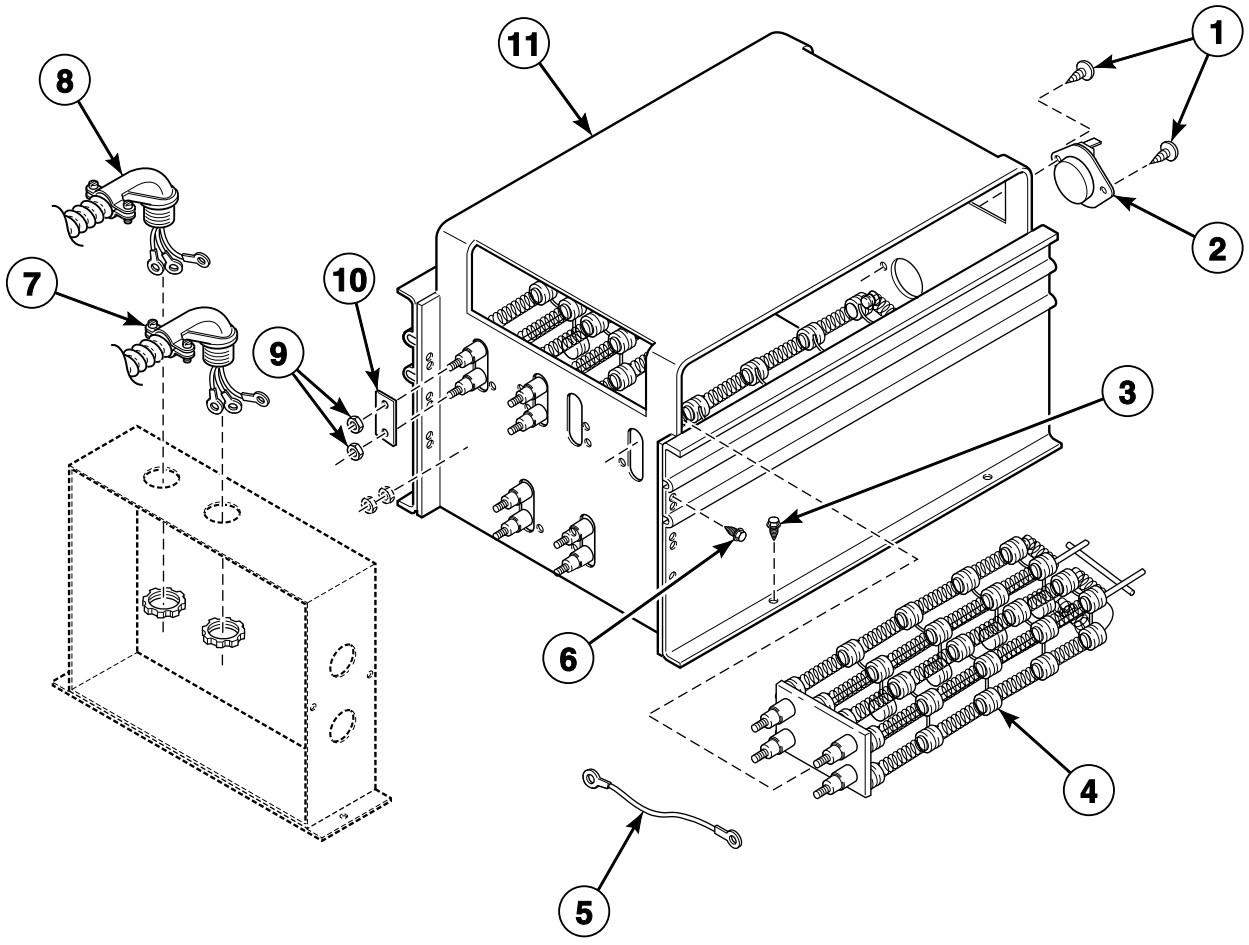

TMB1248P_70409101

© Copyright, Alliance Laundry Systems LLC – DO NOT COPY or TRANSMIT

Electric Heater Components for CE Models

REF	PART NO.	DESCRIPTION	COMMENTS
1	33562	Screw	
2	M410220	Limit Thermostat	
3	430497	Screw	
4	M410939P	Heater Element	10 kW; 240 Volt; 3 required for 230 Volt/50 Hertz/3 Phase and 415 Volt/50 Hertz/3 Phase
	M410941P	Heater Element	10 kW; 220 Volt; 3 required for 380 Volt/50 Hertz/3 Phase
5	M412287	Jumper Wire Assembly	380 Volt/50 Hertz/3 Phase and 415 Volt/50 Hertz/3 Phase
6	70240301	Screw	
7	M412802	Heater Cable Harness Assembly	240 Volt; 230 Volt/50 Hertz/3 Phase; Includes nut
8	M412801	Heater Cable Harness Assembly	230 Volt/50 Hertz/3 Phase, 380 Volt/50 Hertz/3 Phase and 415 Volt/50 Hertz/3 Phase; Includes nut
9	70054	Nut	12 required
10	M400869	Jumper Strip	6 required
	M400866	Jumper Bar	380 Volt/50 Hertz/3 Phase and 415 Volt/50 Hertz/3 Phase
11	M414825	Electric Heater Cabinet Assembly	

© Copyright, Alliance Laundry Systems LLC – DO NOT COPY or TRANSMIT

Airflow Switch Assembly

Electric Models

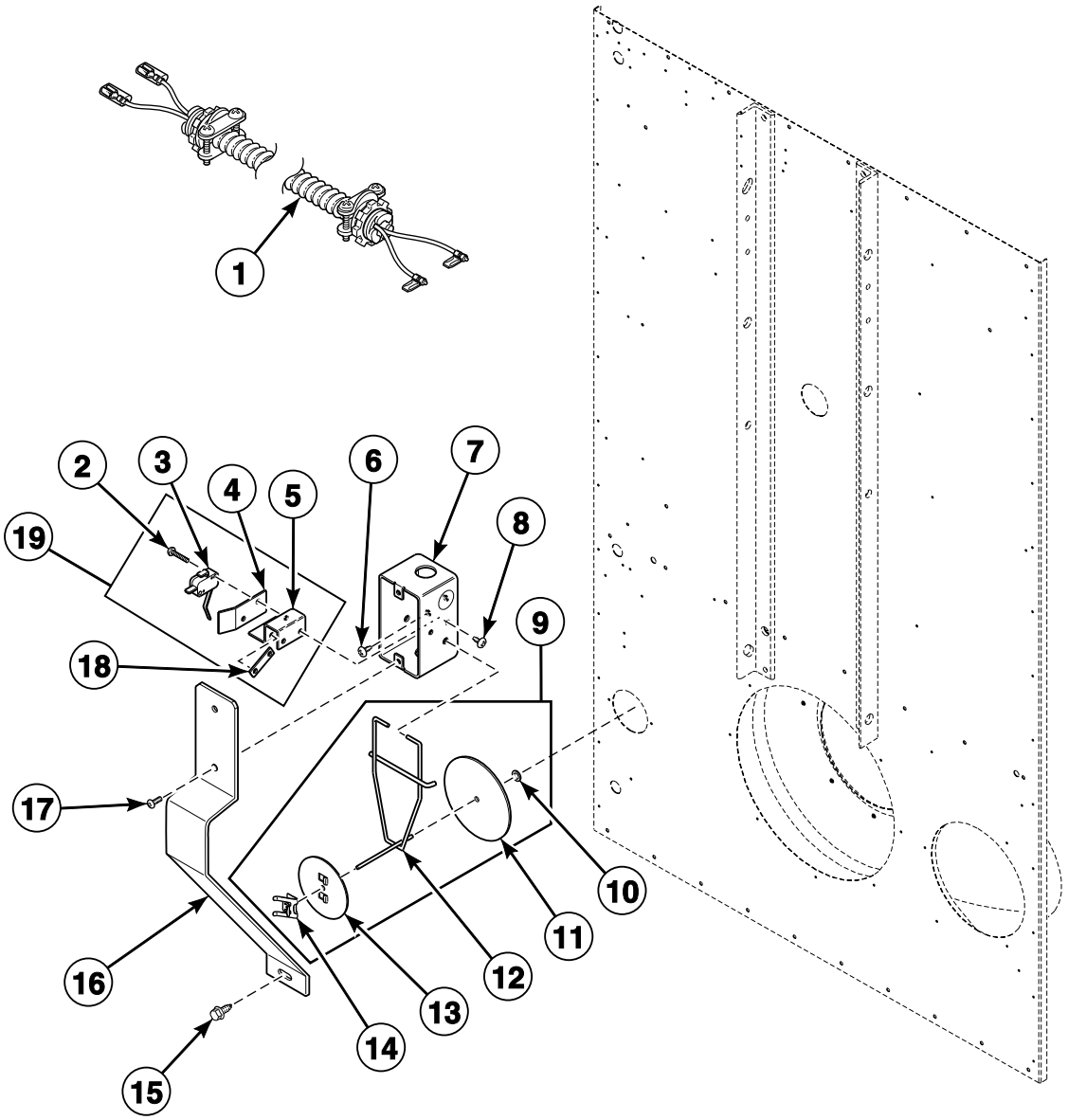

TMB2807P_70409101

© Copyright, Alliance Laundry Systems LLC – DO NOT COPY or TRANSMIT

Airflow Switch Assembly

REF	PART NO.	DESCRIPTION	COMMENTS
1	M413689	Airflow Switch Harness Assembly	
2	M401938	Screw	
3	M400944	Airflow Switch	Non-CE models
4	M400712	Airflow Switch Insulator Barrier	
5	M409202	Airflow Switch Bracket	
6	430497	Screw	2 required
7	M403235	Airflow Switch Handy Box	
8	M400664	Screw	
9	M400541	Vane Assembly	
10	M400977	Nut	
11	M400253	Vane	
12	M400753	Airflow Switch Vane Lever	
13	M400822	Counterweight	
14	M400976	Clip	
15	51780	Screw	
16	M410544	Airflow Switch Guard	
17	M400072	Screw	
18	M400979	Nut	
19	M401883	Airflow Switch Assembly	Includes items 2-5 and 18

© Copyright, Alliance Laundry Systems LLC – DO NOT COPY or TRANSMIT

Steam Heater and Valve

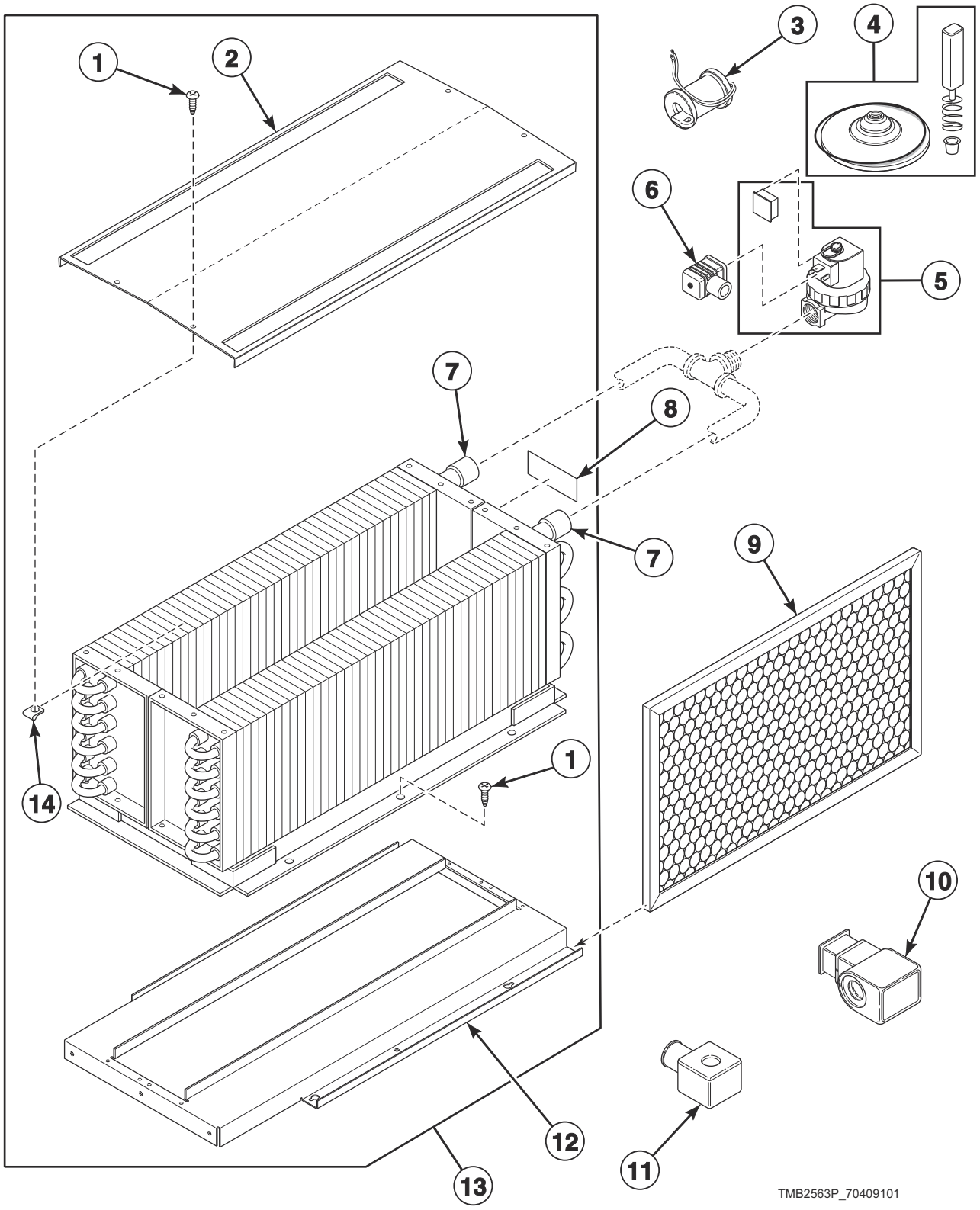

© Copyright, Alliance Laundry Systems LLC – DO NOT COPY or TRANSMIT

Steam Heater and Valve

REF	PART NO.	DESCRIPTION	COMMENTS
	M405188	Screw	Thermal oil models; 8 required
	33562	Screw	Thermal oil models; 4 required
	M414759	Top Cover	Thermal oil models
	F8382301	DIN Valve Adapter Kit	Use with F8322902 Steam Valve
1	430497	Screw	
2	M400828	Low Pressure Steam Cover	
3	70205701P	Steam Valve Coil	All models except thermal oil models; Models through 2/28/05; 60 Hertz; 24 Volt
	M412258	Steam Valve Coil	All models except thermal oil models; Models through 2/28/05; 50 Hertz; 24 Volt
	F8514801	Valve Coil	Use with F8322902 Steam Valve
4	F8379502	Valve Rebuild Kit	All models except thermal oil models
5	F8322903	Steam Valve	All models except thermal oil models; 50 Hertz; Asco
	F8322902	Steam Valve	All models except thermal oil models; 60 Hertz; Asco
	F8521701	Valve Kit	All models except thermal oil models; 60 Hertz
6	70370301P	Solenoid Valve DIN Connector	All models except thermal oil models
7	M400637P	Steam Coil	2 required; All models except thermal oil models
8	902303	Steam Pressure Label	All models except thermal oil models; Near inlet to indicate maximum steam pressure
9	44172001	Filter	2 required; Aluminum; CE and Australian models
	44104201	Air Filter	2 required; Fiberglass; Non-CE and non-Australian models
10	70351012	Steam Solenoid	All models except thermal oil models; Models starting 3/1/05; 50 Hertz
11	70351011P	Steam Solenoid	All models except thermal oil models; Models starting 3/1/05; 60 Hertz
12	44007501	Steam Stand Box	
13	44020401P	Steam Heater Assembly	All models except thermal oil models
14	M400974	Clip	

© Copyright, Alliance Laundry Systems LLC – DO NOT COPY or TRANSMIT

Rotation Sensor

B, C and I Models

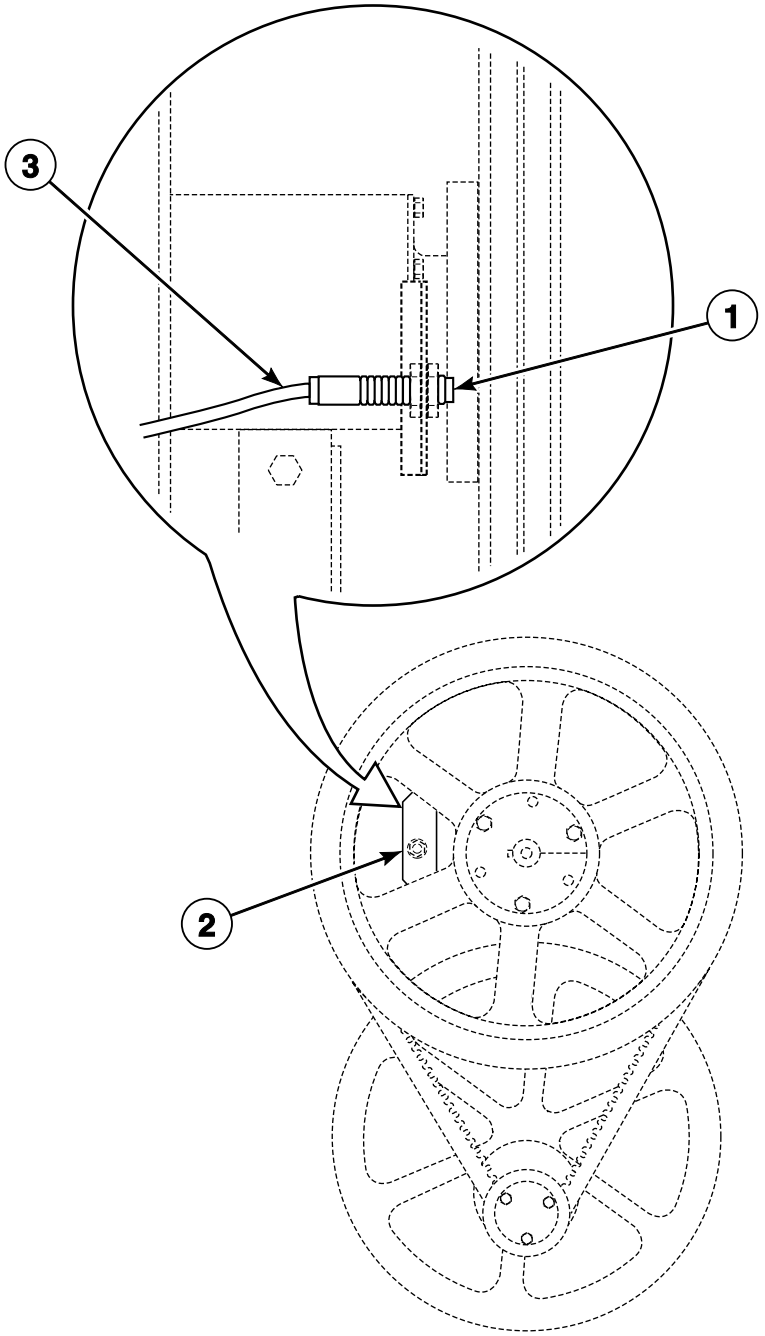

TMB2009P_70409101

© Copyright, Alliance Laundry Systems LLC – DO NOT COPY or TRANSMIT

Rotation Sensor

REF	PART NO.	DESCRIPTION	COMMENTS
1	7009P	Rotation Sensor Kit	Includes plug; C and I models
	70417401P	Rotation Sensor Assembly	Includes plug; B models
2	44044501	Proximity Bracket	
3	7009P	Rotation Sensor Kit	Includes connector

© Copyright, Alliance Laundry Systems LLC – DO NOT COPY or TRANSMIT

Duct and Damper Assembly

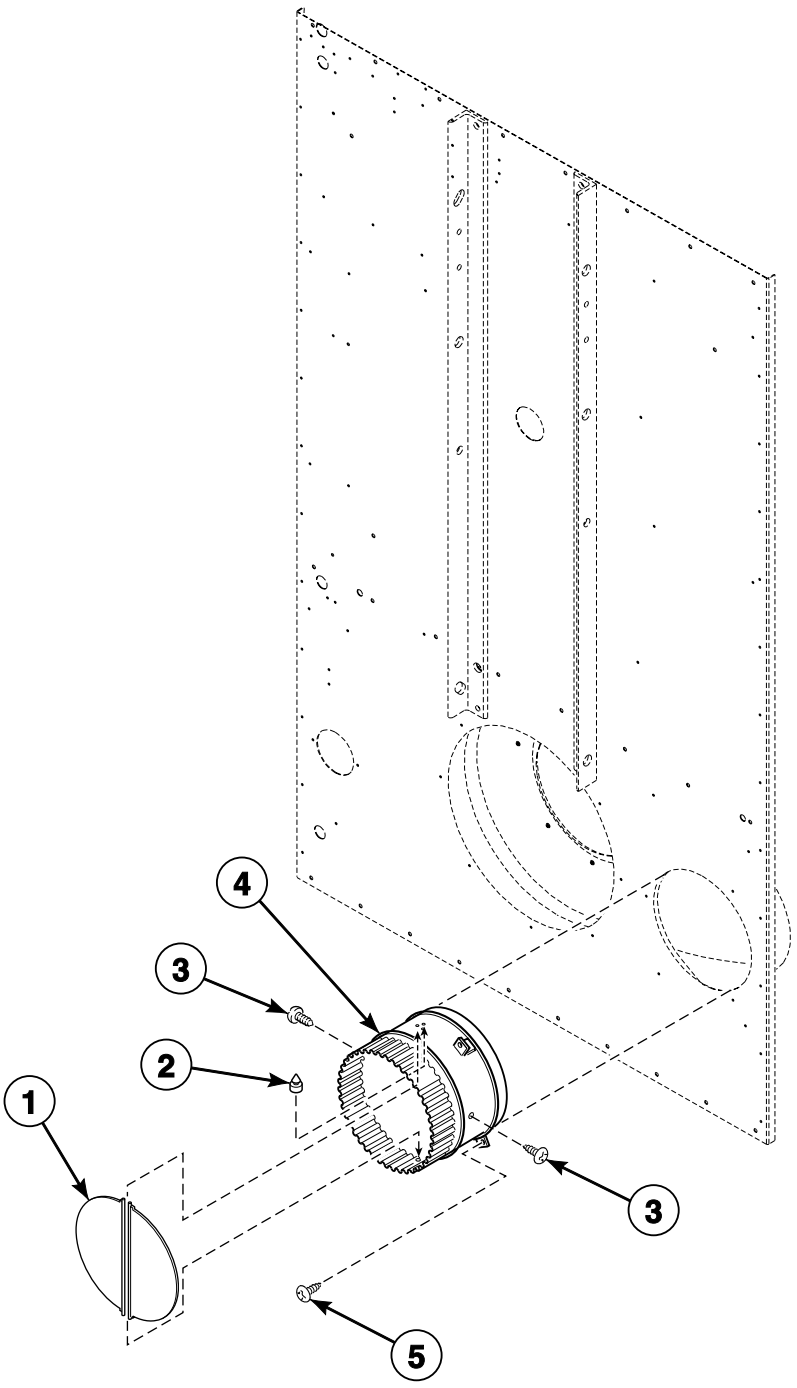

TMB2161P_70409101

© Copyright, Alliance Laundry Systems LLC – DO NOT COPY or TRANSMIT

Duct and Damper Assembly

REF	PART NO.	DESCRIPTION	COMMENTS
1	M400503	Thimble Vane Assembly	2 required
2	M400795	Bumper	
3	M405188	Screw	2 required
4	M412288	Exhaust Thimble Assembly	
5	M411072	Screw	3 required

© Copyright, Alliance Laundry Systems LLC – DO NOT COPY or TRANSMIT

Rear Panel Assembly

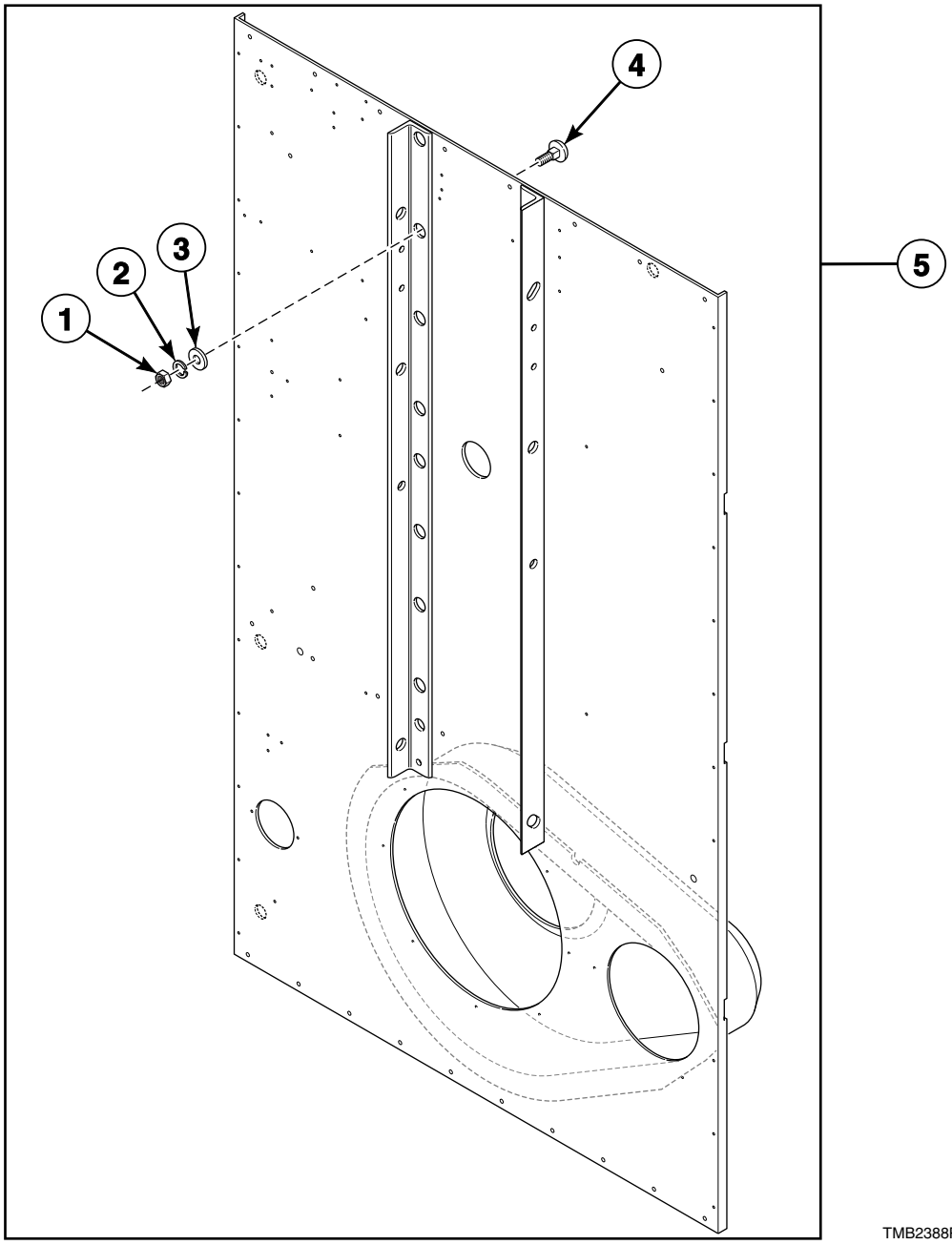

TMB2388P_70409101

© Copyright, Alliance Laundry Systems LLC – DO NOT COPY or TRANSMIT

Rear Panel Assembly

REF	PART NO.	DESCRIPTION	COMMENTS
1	20274	Nut	14 required
2	M400014	Washer	14 required
3	M400080	Washer	14 required
4	M405503	Bolt	14 required
5	N/A	Rear Panel Assembly	Bolt on angle option

N/A = Part no longer available

© Copyright, Alliance Laundry Systems LLC – DO NOT COPY or TRANSMIT

Contactor Box Assembly Harnesses (Drawing 1 of 3)

Use with Contactor Box Assembly (Drawing 1 of 21)
Non-CE Gas, Steam and Electric Nonreversing Models

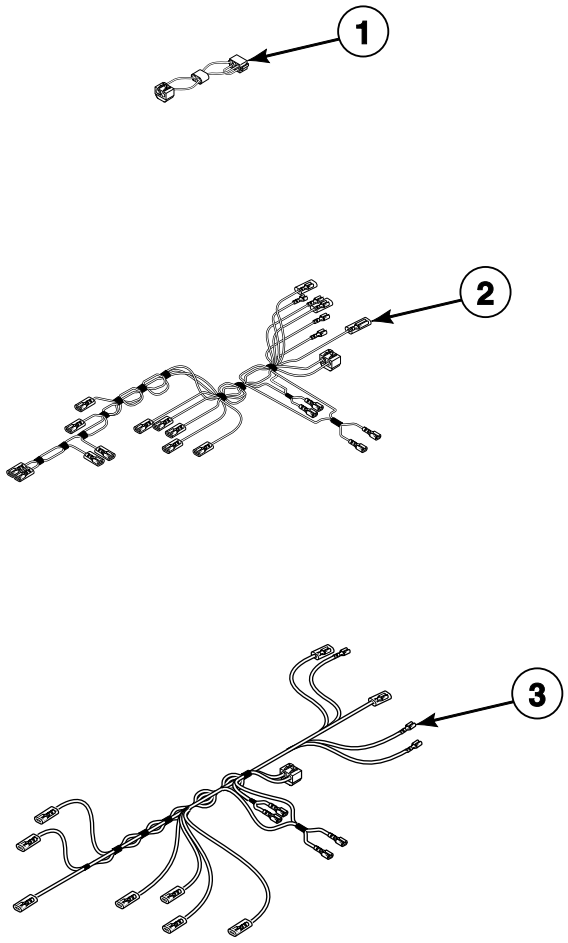

TMB2773P_70409101

© Copyright, Alliance Laundry Systems LLC – DO NOT COPY or TRANSMIT

Contactor Box Assembly Harnesses (Drawing 1 of 3)

REF	PART NO.	DESCRIPTION	COMMENTS
1	M413507	Jumper Configuration Assembly	240 Volt
	M413506	Jumper Harness Assembly	208 Volt; Use on 200 and 200-208 Volt
2	M413683P	Control Box Harness Assembly	3 Phase
3	44005801	Control Box Harness	2 wire
	44005901	Control Box Harness	3 wire; Gas and steam models

© Copyright, Alliance Laundry Systems LLC – DO NOT COPY or TRANSMIT

Contactor Box Assembly Harnesses (Drawing 2 of 3)

Use with Contactor Box Assembly (Drawing 3 of 21)
Non-CE Gas, Steam and Electric Reversing Models Except N Models

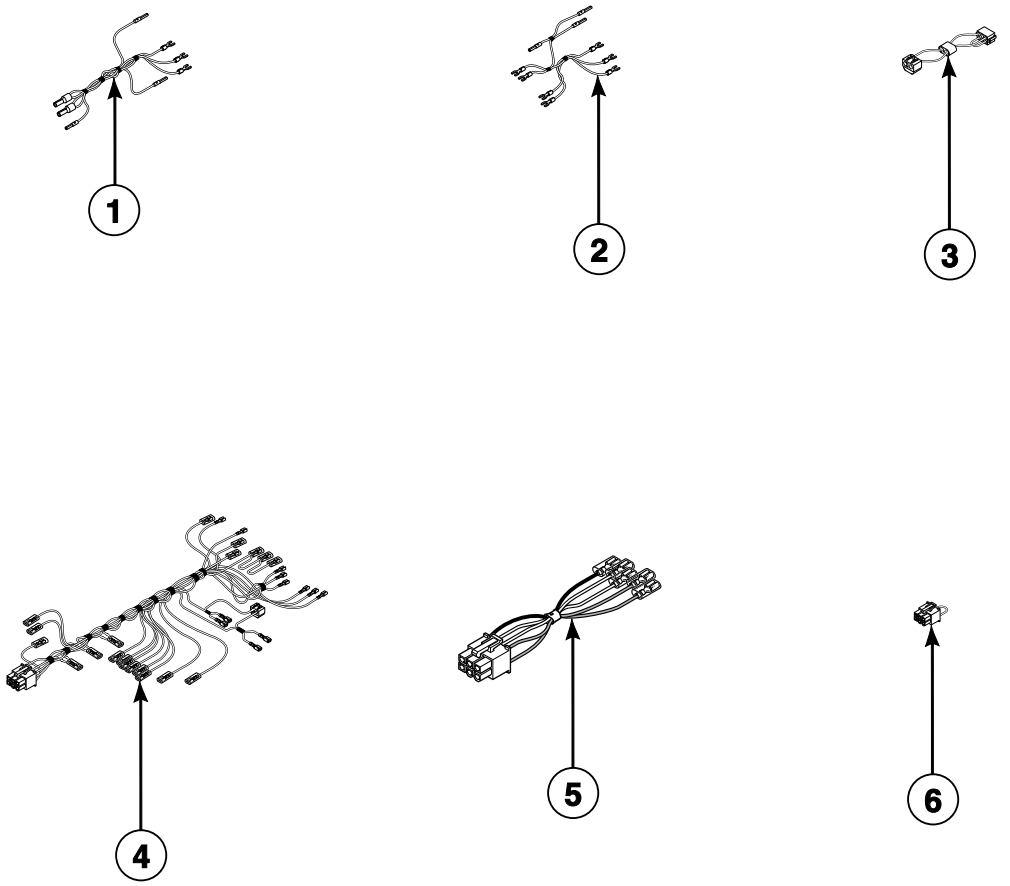

TMB2774P_70409101

© Copyright, Alliance Laundry Systems LLC – DO NOT COPY or TRANSMIT

Contactor Box Assembly Harnesses (Drawing 2 of 3)

REF	PART NO.	DESCRIPTION	COMMENTS
1	M413695	Reversing Contactor Jumper Assembly	Lower; 1 Phase
2	M413624	Reversing Contactor Jumper Assembly	Upper; 3 Phase
3	M413506	Jumper Harness Assembly	208 Volt; 200 Volt/50 Hertz/3 Phase and 200-208 Volt/60 Hertz/3 Phase
	M413507	Jumper Configuration Assembly	240 Volt; 200-208 or 240 Volt/50 or 60 Hertz/1 or 3 Phase and 230-240 Volt/50 Hertz/1 or 3 Phase
4	M413684P	Contactor Box Harness Assembly	200 Volt/50 Hertz/3 Phase; 200-208 or 240 Volt/50 or 60 Hertz/3 Phase; 230-240 Volt/50 Hertz/3 Phase
	44006001	Control Box Harness	230-240 or 240 Volt/50 Hertz/1 Phase
5	44008001	Reversing Timer Harness	RT control suffix
6	M413168	Bypass Harness Assembly	R3, RD, RM and RQ control suffixes

© Copyright, Alliance Laundry Systems LLC – DO NOT COPY or TRANSMIT

Contactor Box Assembly Harnesses (Drawing 3 of 3)

Use with Contactor Box Assembly (Drawing 15 of 21)
CE Electric Models

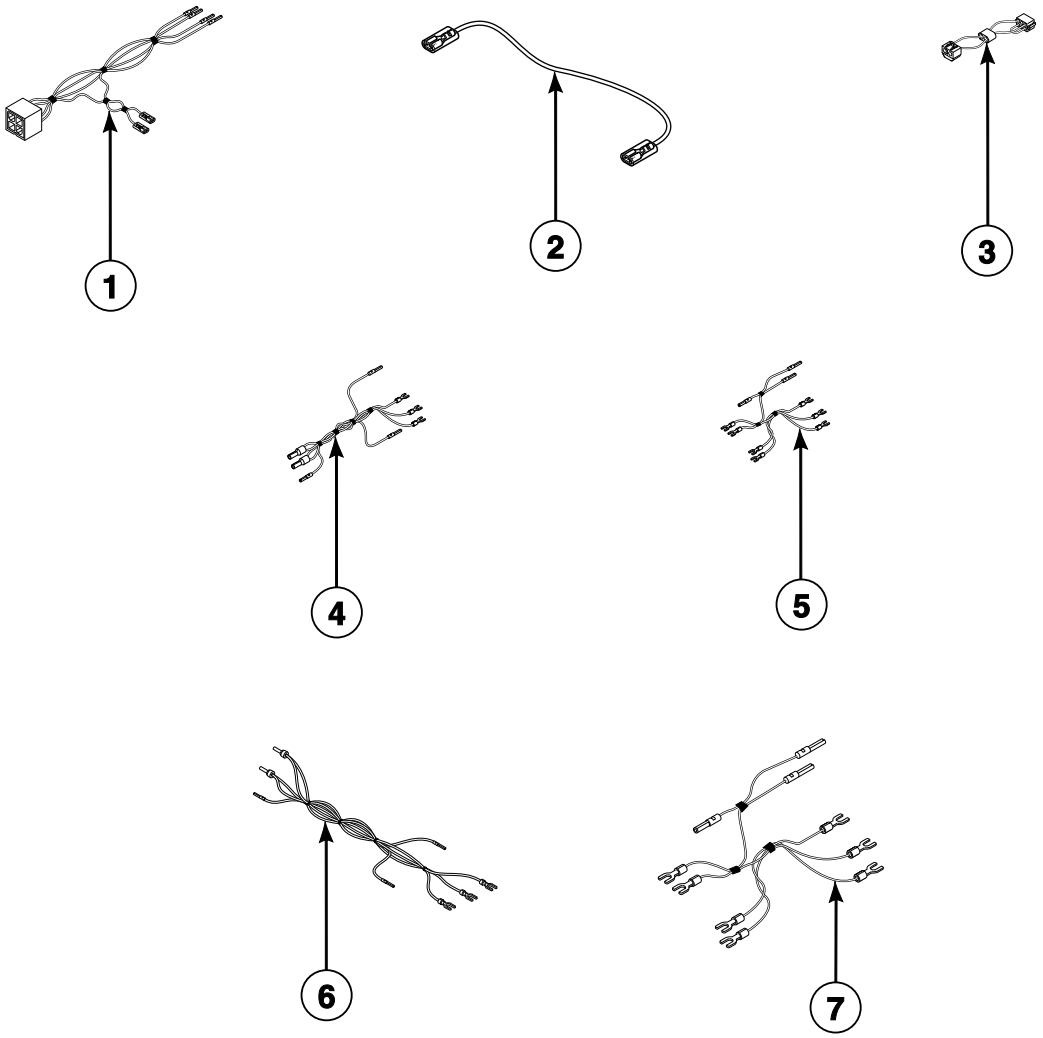

TMB2775P_70409101

© Copyright, Alliance Laundry Systems LLC – DO NOT COPY or TRANSMIT

Contactor Box Assembly Harnesses (Drawing 3 of 3)

REF	PART NO.	DESCRIPTION	COMMENTS
1	M414028	Transformer Harness Assembly	Primary
	M414029	Transformer Harness Assembly	Secondary
	44043101	Transformer Harness	Secondary; DO, DV, DX and RD control suffixes
2	M412740	Jumper Cable Wire	8 gauge; 6 required
	44014501	Jumper Wire	3 required
	44014601	Jumper Wire	3 required
	44014701	Jumper Wire	3 required
	M413934	Jumper Cable Assembly	3 required
3	M413507	Jumper Configuration Assembly	240 Volt; 3O, 3V, 3X, DO, DV, DX, OM, R3, RD and RM control suffixes
	M413506	Jumper Harness Assembly	208 Volt
4	M414078	Jumper Harness Assembly	3O, 3V, 3X, DO, DV, DX, OM, R3, RD and RM control suffixes
5	M412928	Reversing Jumper Harness Assembly	Upper; 2 required; R3, RD and RM control suffixes
	M412929	Reversing Jumper Harness Assembly	Lower; R3, RD and RM control suffixes
6	M412871	Jumper Harness Assembly	400 Volt; BC, BL, BU, BX, BY, NC, NR, NX, NY, ZC, ZR, ZX and ZY control suffixes
7	M414034	Reversing Contactor Harness Assembly	R3, RD and RM control suffixes

© Copyright, Alliance Laundry Systems LLC – DO NOT COPY or TRANSMIT

Contactor Box Assembly (Drawing 1 of 21)

Non-CE Gas, Steam and Electric Nonreversing Models
120 Volt/60 Hertz/1 Phase; 230-240 or 240 Volt/50 Hertz/1 Phase;
200-208 or 240 Volt/50 or 60 Hertz/1 or 3 Phase; 200 or 230-240 Volt/50 Hertz/3 Phase

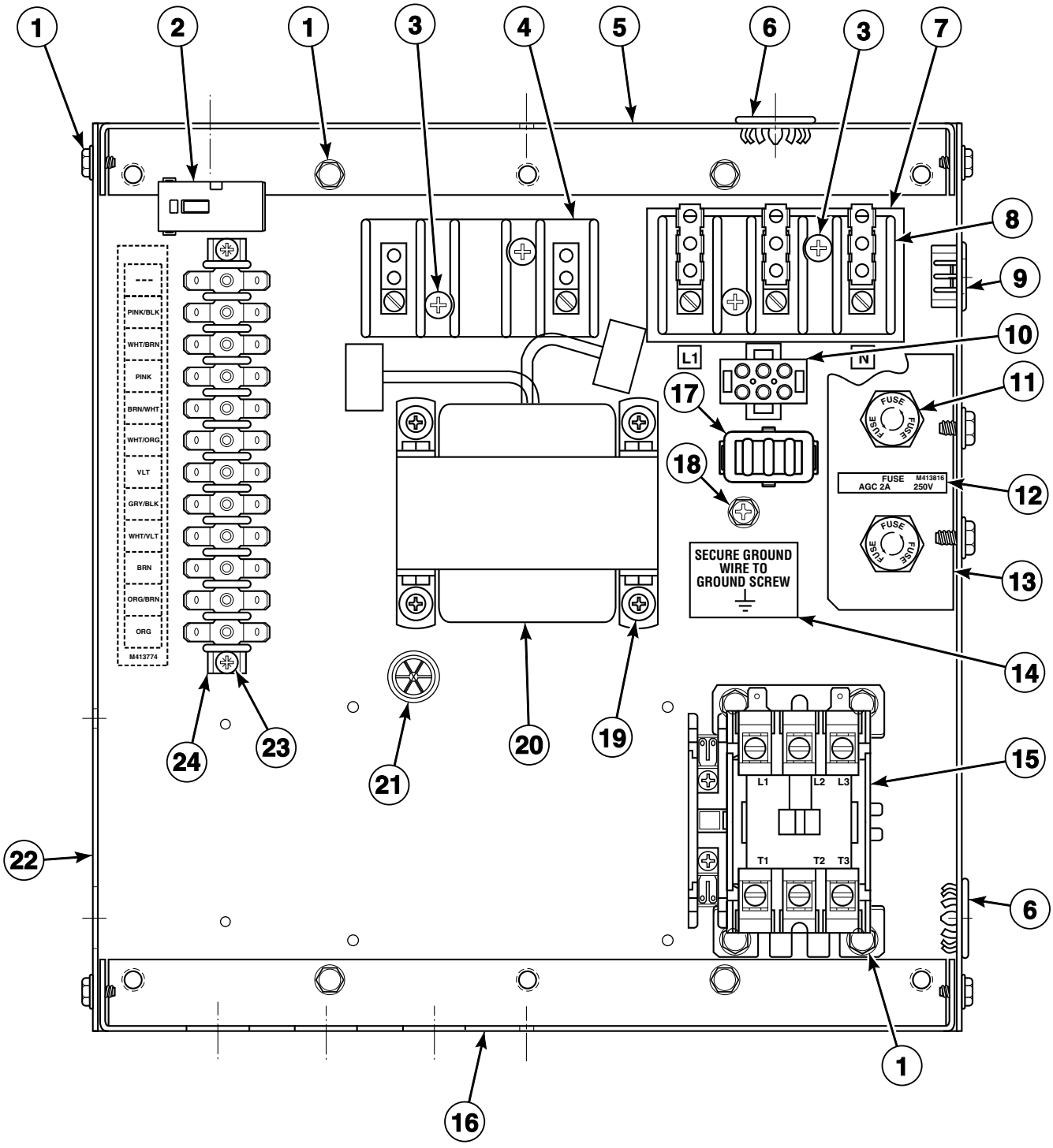

TMB2717P_70409101

© Copyright, Alliance Laundry Systems LLC – DO NOT COPY or TRANSMIT

Contactor Box Assembly (Drawing 1 of 21)

REF	PART NO.	DESCRIPTION	COMMENTS
	M413760	Contactor Box Cover	Gas and steam models
	M413856	Electric Accessory Box Cover	Electric models
	44324001	Warning Label	Extended tumble; On cover
1	51780	Screw	18 required for 200-208 or 240 Volt/50 or 60 Hertz/1 or 3 Phase and 200 or 230-240 Volt/50 Hertz/3 Phase; 14 required for 120 Volt/60 Hertz/1 Phase and 230-240 or 240 Volt/50 Hertz/1 Phase
2	M413930P	Ferrite Core Assembly	OM control suffix
3	M405824	Screw	4 required
4	M405364	Terminal Block	2 pole
5	M413757	Contactor Box End	Top
6	M400985	Plug	7/8 inch; 2 required
7	M413862	Insulator	
8	430642	Terminal Block	3 pole
9	M400770	Snap Bushing	7/8 inch; Electric models
10	M413878	Network Capacitor Harness Assembly	3O, 3V, 3X, DO, DV, DX and OM control suffixes
11	91024P	Fuse Receptacle	250 Volt; 2 required for 200-208 or 240 Volt/50 or 60 Hertz/1 or 3 Phase and 200 or 230-240 Volt/50 Hertz/3 Phase; 1 required for 120 Volt/60 Hertz/1 Phase and 230-240 or 240 Volt/50 Hertz/1 Phase
	M413118	Fuse	250 Volt; 2 Amp; 2 required for 200-208 or 240 Volt/50 or 60 Hertz/1 or 3 Phase and 200 or 230-240 Volt/50 Hertz/3 Phase; 1 required for 120 Volt/60 Hertz/1 Phase and 230-240 or 240 Volt/50 Hertz/1 Phase
12	M413816	Fuse Sticker	2 Amp
13	M413575	Fuse Holder Bracket	
14	M403047	Secure Ground Label	Electrical
15	M413614P	Fan Contactor	200-208 or 240 Volt/50 or 60 Hertz/1 or 3 Phase and 200, 230-240 Volt/50 Hertz/3 Phase, 120 Volt/60 Hertz/1 Phase and 230-240 or 240 Volt/50 Hertz/1 Phase
16	M413758	Contactor Box End	Bottom
17	M413863	Network Capacitor Assembly	3O, 3V, 3X, DO, DV, DX and OM control suffixes
18	M402917	Screw	Ground; Gas and steam models
19	M400044	Screw	4 required; Use with 4 of 23951 Nut to attach item 20
20	M414230P	Transformer	120 Volt; Single secondary; 120 Volt/60 Hertz/1 Phase with CD, CX, CY, MT, QT, SD and SX control suffixes
	M414312P	Transformer	Dual secondary; 120 Volt/60 Hertz/1 Phase with 3O, 3V, 3X, BC, BL, BU, BX, BY, DO, DV, DX, NC, NR, NX, NY, OM, ZC, ZR, ZX and ZY control suffixes
	M414228P	Transformer	Dual secondary; Multitap; 100-240 Volt; 200, 200-208, 230-240 or 240 Volt/50 or 60 Hertz/1 or 3 Phase
21	M411537	Bushing	5/8 inch
22	44028401	Contactor Box Wrapper	
23	51778	Screw	2 required for 200-208 or 240 Volt/50 or 60 Hertz/1 or 3 Phase and 200 or 230-240 Volt/50 Hertz/3 Phase; 4 required for 120 Volt/60 Hertz/1 Phase and 230-240 or 240 Volt/50 Hertz/1 Phase
24	M413542	Terminal Strip	12 circuit

© Copyright, Alliance Laundry Systems LLC – DO NOT COPY or TRANSMIT

Contactor Box Assembly (Drawing 2 of 21)

Non-CE Gas, Steam and Electric Nonreversing Models
380, 400-415 or 415 Volt/50 Hertz/3 Phase; 460-480 or 480 Volt/60 Hertz/3 Phase

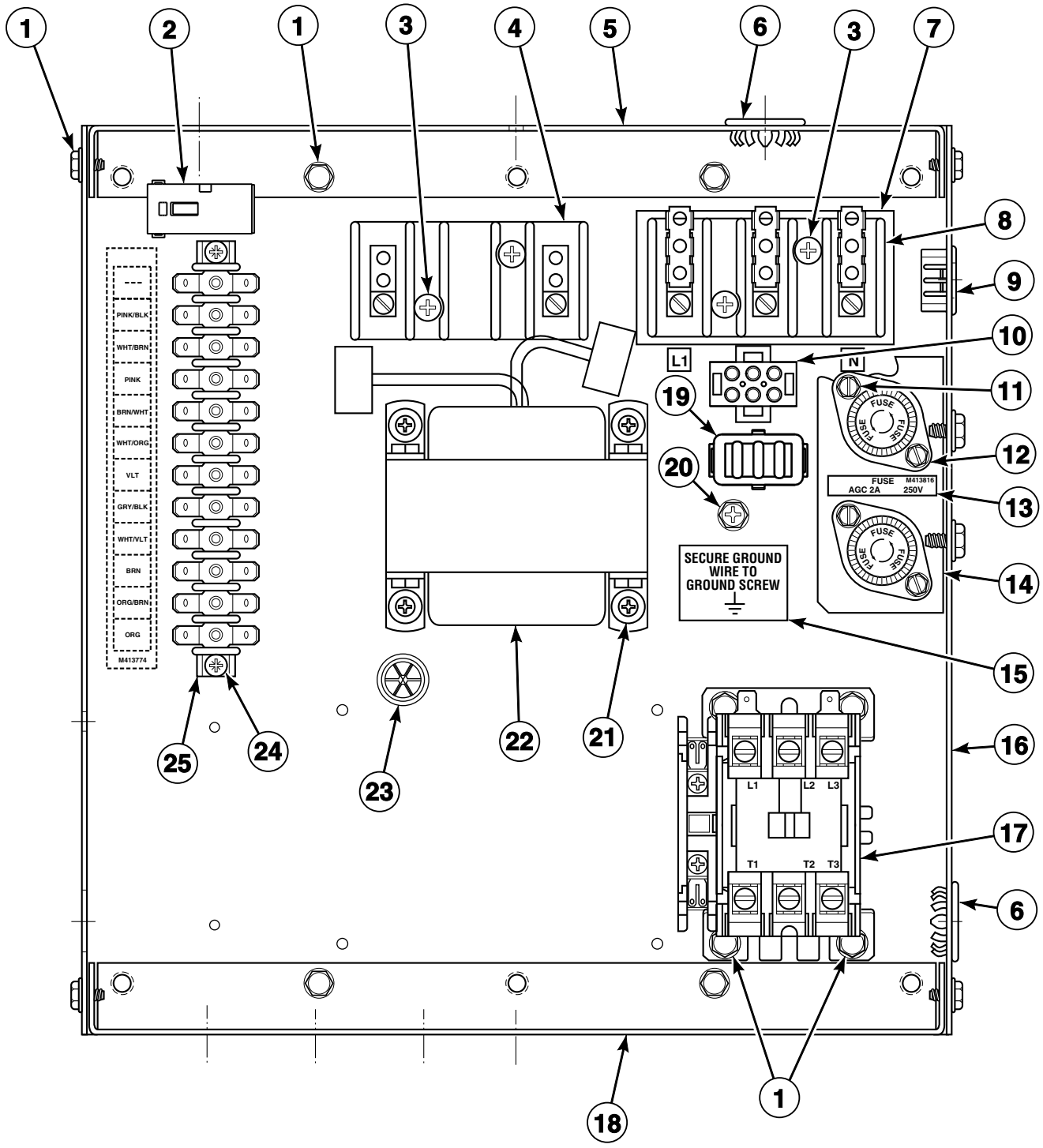

TMB2718P_70409101

© Copyright, Alliance Laundry Systems LLC – DO NOT COPY or TRANSMIT

Contactor Box Assembly (Drawing 2 of 21)

REF	PART NO.	DESCRIPTION	COMMENTS
	M413508	Jumper Harness Assembly	380 Volt; Use on 380, 400-415 or 415 Volt
	M413509	Jumper Harness Assembly	415 Volt
	M413510	Jumper Configuration Assembly	480 Volt; Use on 460-480 or 480 Volt
	M413683P	Control Box Harness Assembly	
	M413760	Contactor Box Cover	Gas and steam models
	M413856	Electric Accessory Box Cover	Electric models
	44324001	Warning Label	Extended tumble; On cover
1	51780	Screw	18 required
2	M413930P	Ferrite Core Assembly	OM control suffix
3	M405824	Screw	4 required
4	M405364	Terminal Block	2 pole
5	M413757	Contactor Box End	Top
6	M400985	Plug	7/8 inch; 2 required
7	M413862	Insulator	
8	430642	Terminal Block	3 pole
9	M400770	Snap Bushing	7/8 inch; Electric models
10	M413878	Network Capacitor Harness Assembly	3O, 3V, 3X, DO, DV, DX and OM control suffixes
11	D501086	Screw	4 required
12	M413544P	Fuse Holder	600 Volt; 2 required
	44310001	Fuse	2 required; 500 Volt; 1/2 Amp
13	M413817	Fuse Sticker	1/2 Amp
14	M413576	Fuse Holder Bracket	
15	M403047	Secure Ground Label	Electrical
16	44028401	Contactor Box Wrapper	
17	M413614P	Fan Contactor	
18	M413758	Contactor Box End	Bottom
19	M413863	Network Capacitor Assembly	3O, 3V, 3X, DO, DV, DX and OM control suffixes
20	M402917	Screw	Ground; Gas and steam models
21	M400044	Screw	4 required; Use with 4 of 23951 Nut to attach item 22
22	M414229P	Transformer	Multitap; 380-480 Volt
23	M411537	Bushing	5/8 inch
24	51778	Screw	2 required
25	M413542	Terminal Strip	12 circuit

© Copyright, Alliance Laundry Systems LLC – DO NOT COPY or TRANSMIT

Contactor Box Assembly (Drawing 3 of 21)

Non-CE Gas, Steam and Electric Reversing Models Except N Models
230-240 or 240 Volt/50 Hertz/1 Phase; 200 Volt/50 Hertz/3 Phase;
200-208 or 240 Volt/50 or 60 Hertz/3 Phase; 230-240 Volt/50 Hertz/3 Phase

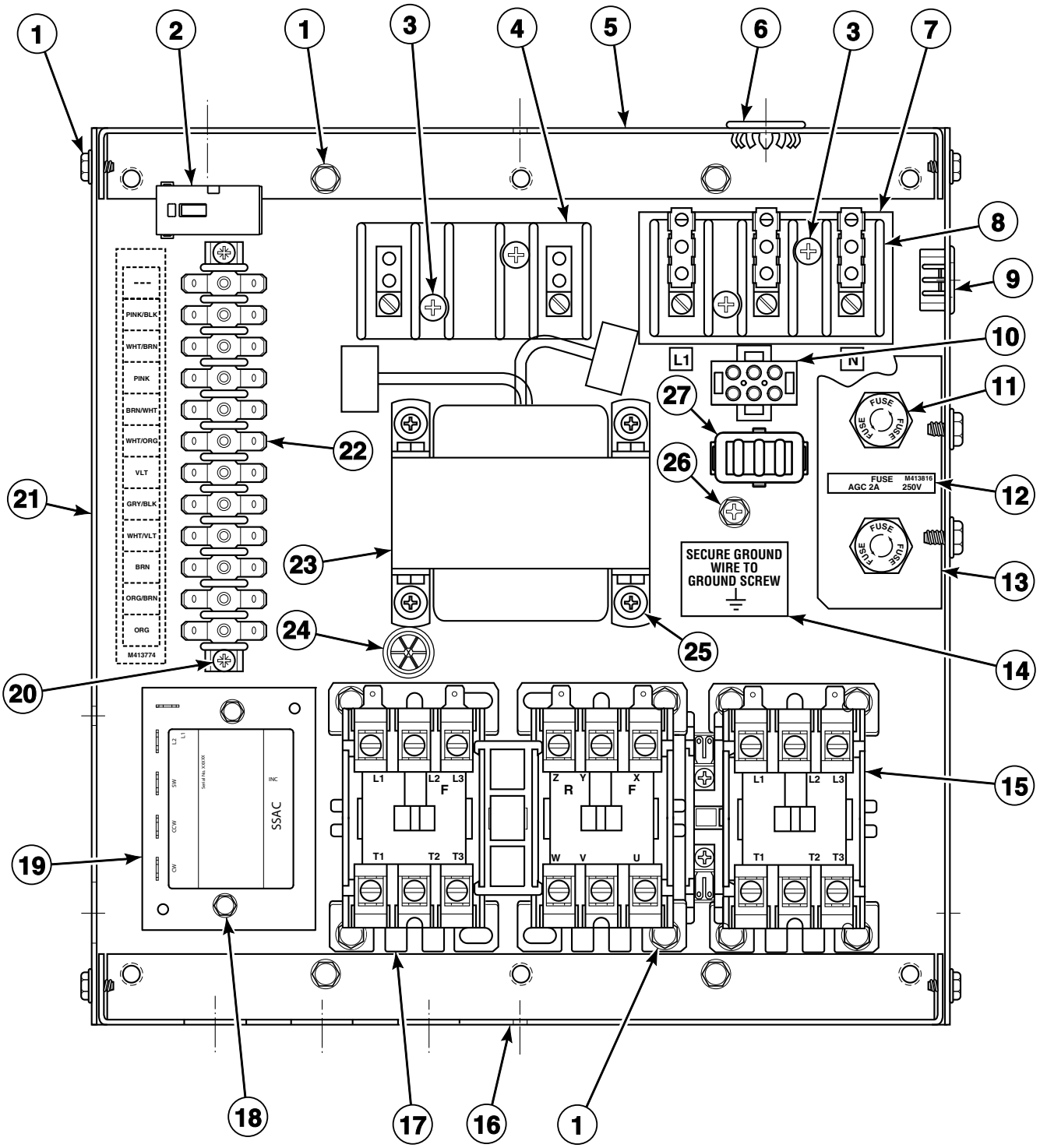

TMB2719P_70409101

© Copyright, Alliance Laundry Systems LLC – DO NOT COPY or TRANSMIT

Contactor Box Assembly (Drawing 3 of 21)

REF	PART NO.	DESCRIPTION	COMMENTS
	M413760	Contactor Box Cover	Gas and steam models
	M413856	Electric Accessory Box Cover	Electric models
	44324001	Warning Label	Extended tumble; On cover
1	51780	Screw	22 required for 200 Volt/50 Hertz/3 Phase, 200-208 or 240 Volt/50 or 60 Hertz/3 Phase and 230-240 Volt/50 Hertz/3 Phase; 18 required for 230-240 or 240 Volt/50 Hertz/1 Phase
2	M413930P	Ferrite Core Assembly	RM control suffix
3	M405824	Screw	4 required
4	M405364	Terminal Block	2 pole
5	M413757	Contactor Box End	Top
6	M400985	Plug	7/8 inch
7	M413862	Insulator	
8	430642	Terminal Block	3 pole
9	M400770	Snap Bushing	7/8 inch; Electric models
10	M413878	Network Capacitor Harness Assembly	R3, RD and RM control suffixes
11	91024P	Fuse Receptacle	250 Volt; 2 required for 200 Volt/50 Hertz/3 Phase, 200-208 or 240 Volt/50 or 60 Hertz/3 Phase and 230-240 Volt/50 Hertz/3 Phase; 1 required for 230-240 or 240 Volt/50 Hertz/1 Phase
	M413118	Fuse	250 Volt; 2 Amp; 2 required for 200 Volt/50 Hertz/3 Phase, 200-208 or 240 Volt/50 or 60 Hertz/3 Phase and 230-240 Volt/50 Hertz/3 Phase; 1 required for 230-240 or 240 Volt/50 Hertz/1 Phase
12	M413816	Fuse Sticker	2 Amp
13	M413575	Fuse Holder Bracket	
14	M403047	Secure Ground Label	Electrical
15	M413614P	Fan Contactor	200 Volt/50 Hertz/3 Phase, 200-208 or 240 Volt/50 or 60 Hertz/3 Phase, 230-240 Volt/50 Hertz/3 Phase and 230-240 or 240 Volt/50 Hertz/1 Phase
	D502501P	Relay	24 Volt; 230-240 or 240 Volt/50 Hertz/1 Phase
16	M413758	Contactor Box End	Bottom
17	M413615P	Reversing Contactor	
18	M412105	Screw	2 required; RT control suffix
19	M412081	Reversing Timer	24 Volt; RT control suffix
20	51778	Screw	2 required for 200 Volt/50 Hertz/3 Phase, 200-208 or 240 Volt/50 or 60 Hertz/3 Phase and 230-240 Volt/50 Hertz/3 Phase; 4 required for 230-240 or 240 Volt/50 Hertz/1 Phase
21	44028401	Contactor Box Wrapper	
22	M413542	Terminal Strip	12 circuit
23	M414228P	Transformer	Dual secondary; Multitap; 100-240 Volt
24	M411537	Bushing	5/8 inch
25	M400044	Screw	4 required; Use with 4 of 23951 Nut to attach item 23
26	M402917	Screw	Ground; Gas and steam models
27	M413863	Network Capacitor Assembly	R3, RD and RM control suffixes

© Copyright, Alliance Laundry Systems LLC – DO NOT COPY or TRANSMIT

Contactor Box Assembly (Drawing 4 of 21)

Non-CE Gas, Steam and Electric Reversing Models Except N Models
380, 400-415 or 415 Volt/50 Hertz/3 Phase; 460-480 or 480 Volt/60 Hertz/3 Phase

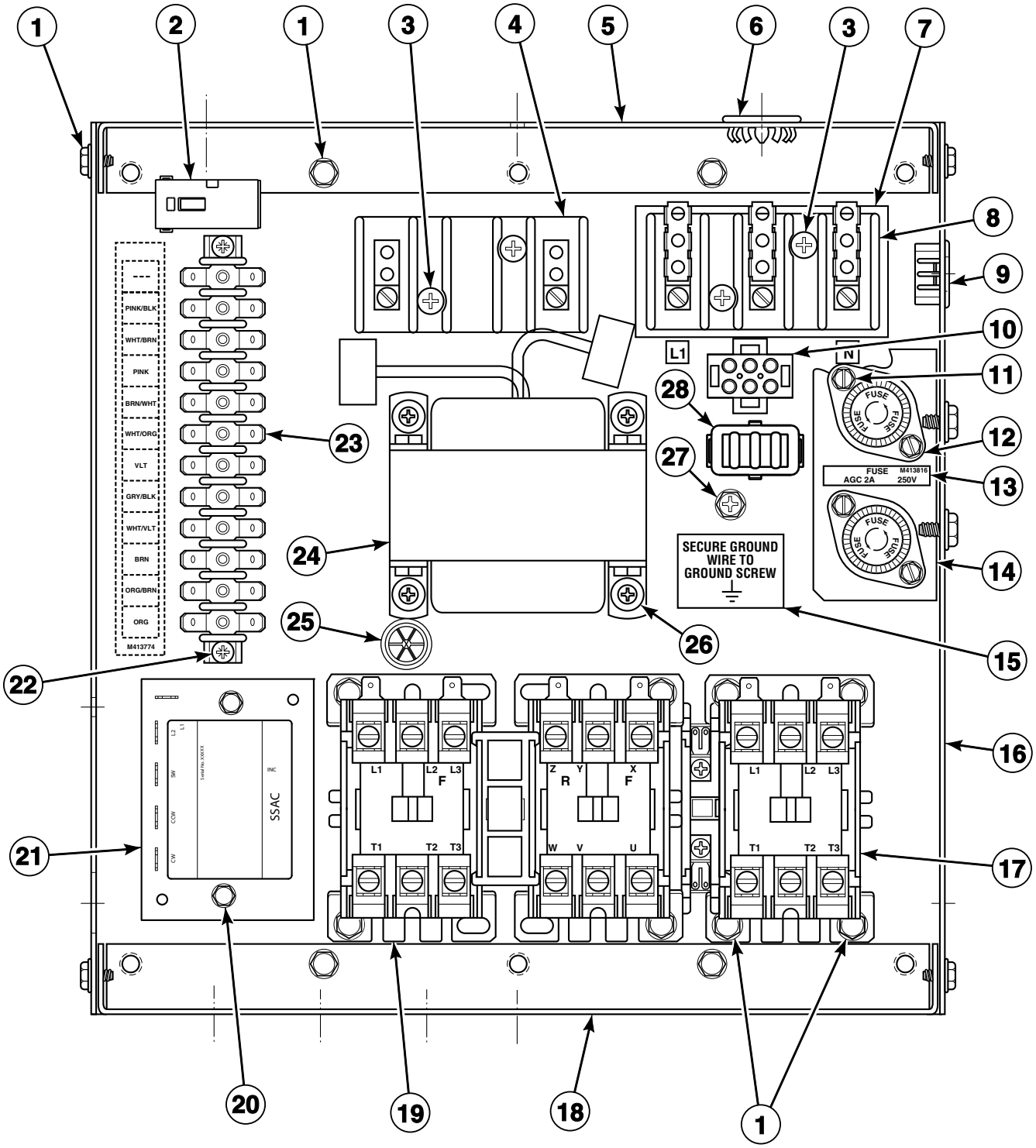

TMB2720P_70409101

© Copyright, Alliance Laundry Systems LLC – DO NOT COPY or TRANSMIT

Contactor Box Assembly (Drawing 4 of 21)

REF	PART NO.	DESCRIPTION	COMMENTS
	M413508	Jumper Harness Assembly	380 Volt; 380, 400-415 or 415 Volt/50 Hertz/3 Phase
	M413509	Jumper Harness Assembly	415 Volt
	M413510	Jumper Configuration Assembly	480 Volt; 460-480 or 480 Volt/60 Hertz/3 Phase
	M413684P	Contactor Box Harness Assembly	Reversing
	M413168	Bypass Harness Assembly	R3, RD, RM and RQ control suffixes
	M413624	Reversing Contactor Jumper Assembly	Upper; 3 Phase
	44008001	Reversing Timer Harness	RT control suffix
	M413760	Contactor Box Cover	Gas and steam models
	M413856	Electric Accessory Box Cover	Electric models
	44324001	Warning Label	Extended tumble; On cover
1	51780	Screw	22 required
2	M413930P	Ferrite Core Assembly	RM control suffix
3	M405824	Screw	4 required
4	M405364	Terminal Block	2 pole
5	M413757	Contactor Box End	Top
6	M400985	Plug	7/8 inch
7	M413862	Insulator	
8	430642	Terminal Block	3 pole
9	M400770	Snap Bushing	7/8 inch; Electric models
10	M413878	Network Capacitor Harness Assembly	R3, RD and RM control suffixes
11	D501086	Screw	4 required
12	M413544P	Fuse Holder	600 Volt; 2 required
	44310001	Fuse	2 required; 500 Volt; 1/2 Amp
13	M413817	Fuse Sticker	1/2 Amp
14	M413576	Fuse Holder Bracket	
15	M403047	Secure Ground Label	Electrical
16	44028401	Contactor Box Wrapper	
17	M413614P	Fan Contactor	
18	M413758	Contactor Box End	Bottom
19	M413615P	Reversing Contactor	
20	M412105	Screw	2 required; RT control suffix
21	M412081	Reversing Timer	24 Volt; RT control suffix
22	51778	Screw	2 required
23	M413542	Terminal Strip	12 circuit
24	M414229P	Transformer	Multitap; 380-480 Volt
25	M411537	Bushing	5/8 inch
26	M400044	Screw	4 required; Use with 4 of 23951 Nut to attach item 24
27	M402917	Screw	Ground; Gas and steam models
28	M413863	Network Capacitor Assembly	R3, RD and RM control suffixes

© Copyright, Alliance Laundry Systems LLC – DO NOT COPY or TRANSMIT

Contactor Box Assembly (Drawing 5 of 21)

CE Gas and Steam Models Except K and L Models
Models with MT and QT Control Suffixes and SD and SX Control Suffixes Starting 1/1/07;
230 Volt/50 Hertz/1 Phase

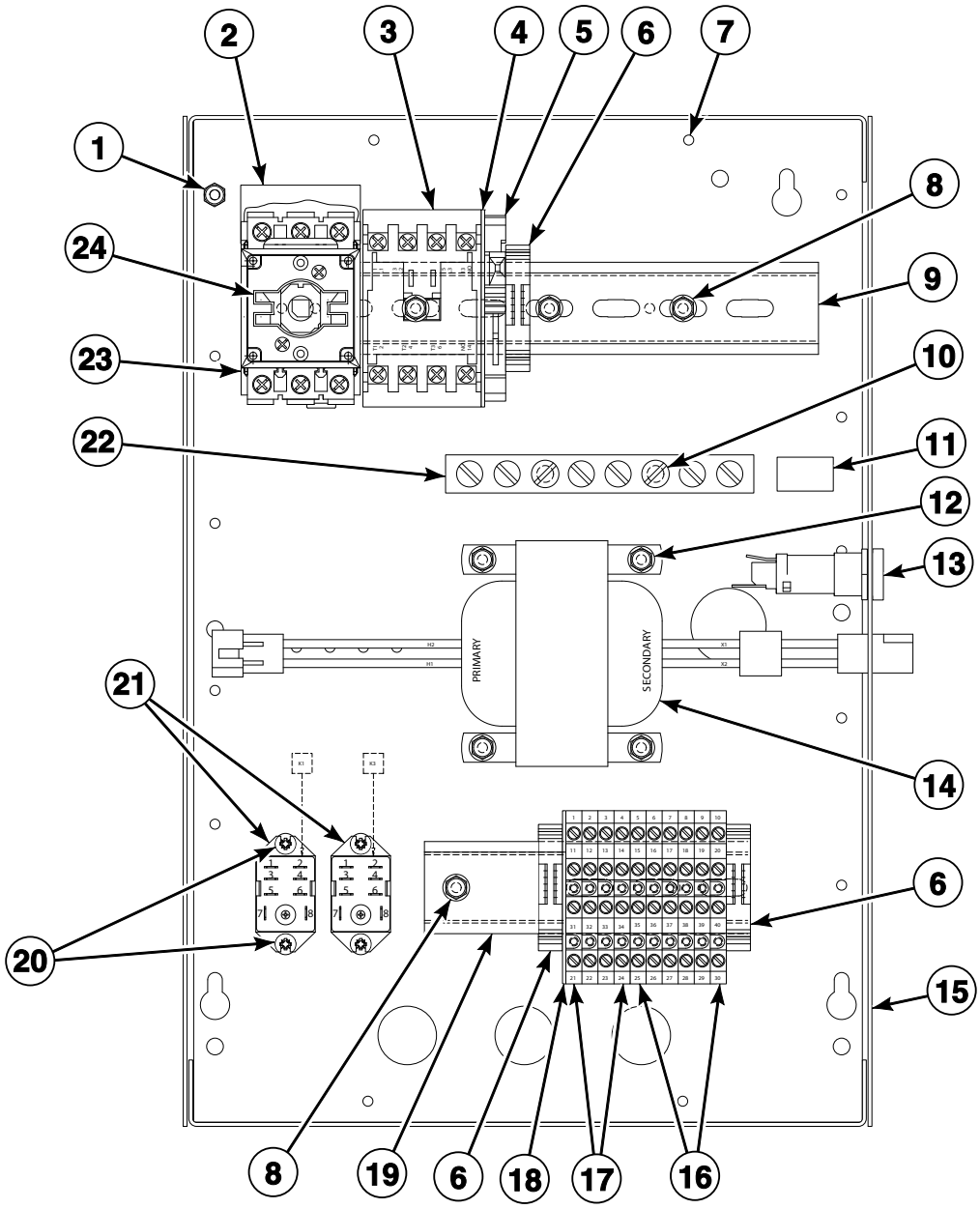

TMB2605P_70409101

© Copyright, Alliance Laundry Systems LLC – DO NOT COPY or TRANSMIT

Contactor Box Assembly (Drawing 5 of 21)

REF	PART NO.	DESCRIPTION	COMMENTS
	M412636	Relay Harness Assembly	K1, K2, K3
	M412641	Transformer Harness Assembly	Secondary
	M412642	Transformer Harness Assembly	Primary; 240 Volt
	M412650	Junction Box Cover	Use 2 of M400713 Drive Rivet to secure cover to junction box; Use M412368 Door Interlock to mount M412208 Handle to cover
	44324001	Warning Label	Extended tumble; On junction box cover
1	430497	Screw	18 required; To secure junction box to backplane
2	M412366	Finger Guard	20 Amp
3	70323701P	Contactor	9 Amp
4	M412540	End Section	
5	M412537	Terminal Block	230 Volt primary; Use D502593 Fuse
6	70121001	End Stop	230 Volt; 3 required
7	N/A	Junction Box Bottom	
8	51780	Screw	5 required
9	N/A	Din Rail	
10	M412688	Nut	2 required
11	M412096	Earth Terminal Sticker	
12	33562	Screw	4 required
13	D502591P	Fuse Holder Kit	Includes D502591 Fuse Holder Body and D502811 Fuse Carrier
	D502592	Fuse	
14	M412477P	Transformer	240 Volt
15	M412649	Junction Box Side	2 required
16	M412631	Terminal Block	2 circuit; 6 required
17	M412632	Terminal Block	1 circuit; 4 required
18	M412633	End Barrier	
19	N/A	Din Rail	
20	D501086	Screw	4 required
21	M412534	Relay	24 Volt; 2 required
22	M412656	Ground Buss Assembly	
23	M412187P	Mounting Switch Base	20 Amp
24	M412370	Extension Handle	20 Amp; Includes screws

N/A = Part no longer available

© Copyright, Alliance Laundry Systems LLC – DO NOT COPY or TRANSMIT

Contactor Box Assembly (Drawing 6 of 21)

CE Gas and Steam Reversing Models
230 Volt/50 Hertz/1 Phase

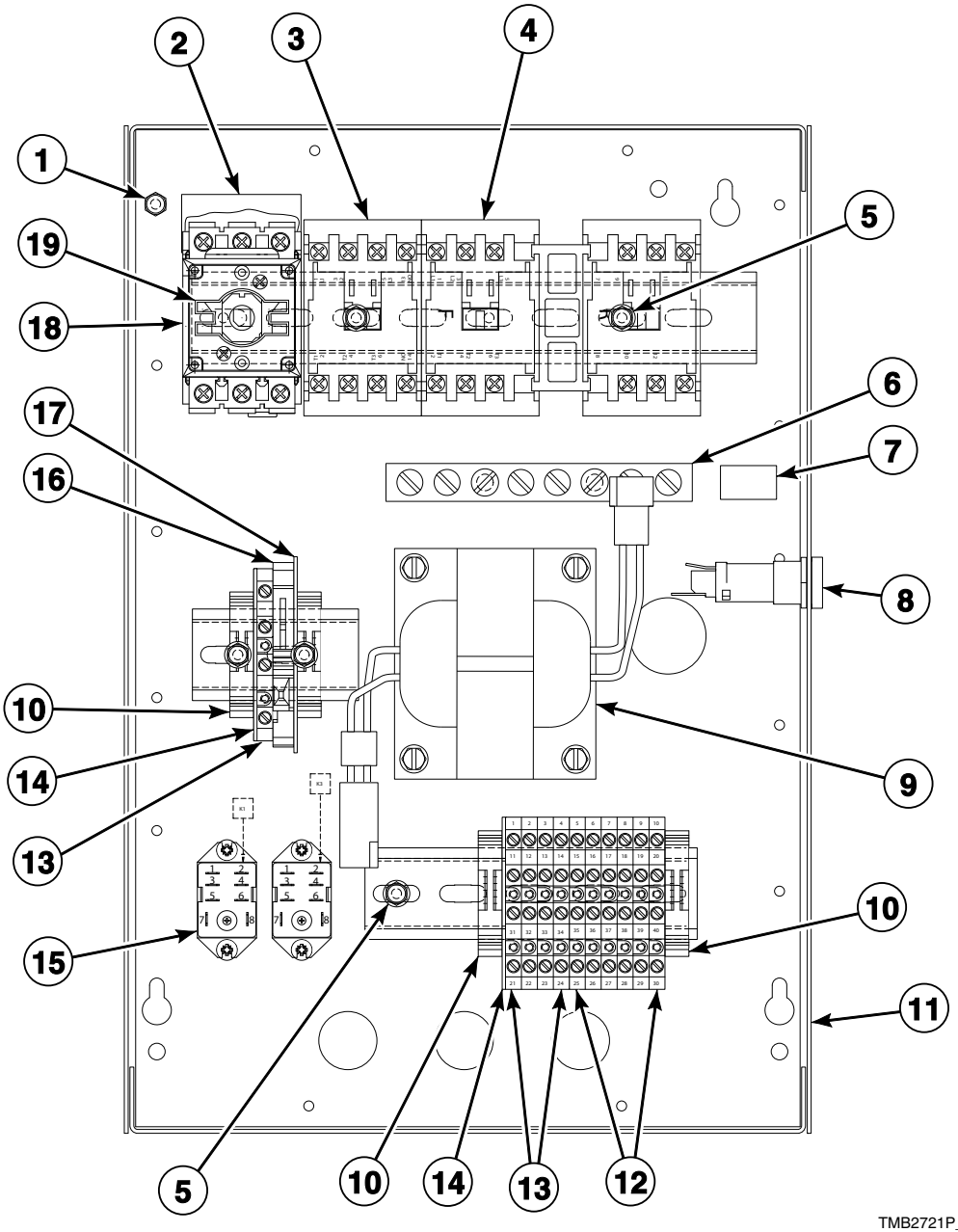

© Copyright, Alliance Laundry Systems LLC – DO NOT COPY or TRANSMIT

Contactor Box Assembly (Drawing 6 of 21)

REF	PART NO.	DESCRIPTION	COMMENTS
	M412636	Relay Harness Assembly	Gas models; RT control suffix
	M414224	Relay Harness Assembly	Gas models; R3, RD, RM and RQ control suffixes
	M414032	Relay Harness Assembly	Steam models; R3, RD, RM and RQ control suffixes
	M412641	Transformer Harness Assembly	Secondary; RQ and RT control suffixes
	M412642	Transformer Harness Assembly	Primary; 240 Volt; RQ and RT control suffixes
	M414076	Transformer Harness Assembly	Primary; R3, RD and RM control suffixes
	M414029	Transformer Harness Assembly	Secondary; R3, RD and RM control suffixes
	44043101	Transformer Harness	Secondary; R3 and RD control suffixes
	M413507	Jumper Configuration Assembly	240 Volt
	M413506	Jumper Harness Assembly	208 Volt
	M413863	Network Capacitor Assembly	R3, RD and RM control suffixes
	M414034	Reversing Contactor Harness Assembly	R3, RD, RM and RQ control suffixes
	M412927	Reversing Jumper Harness Assembly	Lower
	M412650	Junction Box Cover	Use 2 of M400713 Drive Rivet to secure cover to junction box; Use M412368 Door Interlock to mount M412208 Handle to cover
	44324001	Warning Label	Extended tumble; On junction box cover
1	430497	Screw	18 required; To secure junction box to backplane
2	M412366	Finger Guard	20 Amp
3	70323701P	Contactor	9 Amp
4	M412405P	Reversing Contactor	
5	51780	Screw	6 required
6	M412656	Ground Buss Assembly	Use 2 of M412688 Nut to attach
7	M412096	Earth Terminal Sticker	
8	D502591P	Fuse Holder Kit	Includes D502591 Fuse Holder Body and D502811 Fuse Carrier
	D502592	Fuse	RQ and RT control suffixes
	M413889	Fuse	4 Amp; R3, RD and RM control suffixes
9	M412477P	Transformer	Multitap; 230 Volt; RQ and RT control suffixes; Use 4 of 33562 Screw to attach
	M414228P	Transformer	Dual secondary; Multitap; 110-240 Volt; R3, RD and RM control suffixes; Use 4 of M400044 Screw and 4 of 23951 Nut to attach
10	70121001	End Stop	230 Volt; 4 required
11	M412649	Junction Box Side	2 required
12	M412631	Terminal Block	2 circuit; 6 required
13	M412632	Terminal Block	1 circuit; 4 required
14	M412633	End Barrier	2 required
15	M412534	Relay	24 Volt; 1 required, using 2 of 501086 Screw for RQ and RT control suffixes and 2 of M400071 Screw for R3, RD and RM control suffixes for steam models; 2 required, using 4 of D501086 Screw for RQ and RT control suffixes and 4 of M400071 Screw for R3, RD and RM control suffixes for gas models
16	M412537	Terminal Block	230 Volt; Primary; Use D502593 or M413867 Fuse
17	M412540	End Section	
18	M412187P	Mounting Switch Base	20 Amp
19	M412370	Extension Handle	20 Amp

© Copyright, Alliance Laundry Systems LLC – DO NOT COPY or TRANSMIT

Contactor Box Assembly (Drawing 7 of 21)

CE Gas C, H, P and S Models
Models with CD, CX and CY Control Suffixes;
230 Volt/50 Hertz/1 Phase

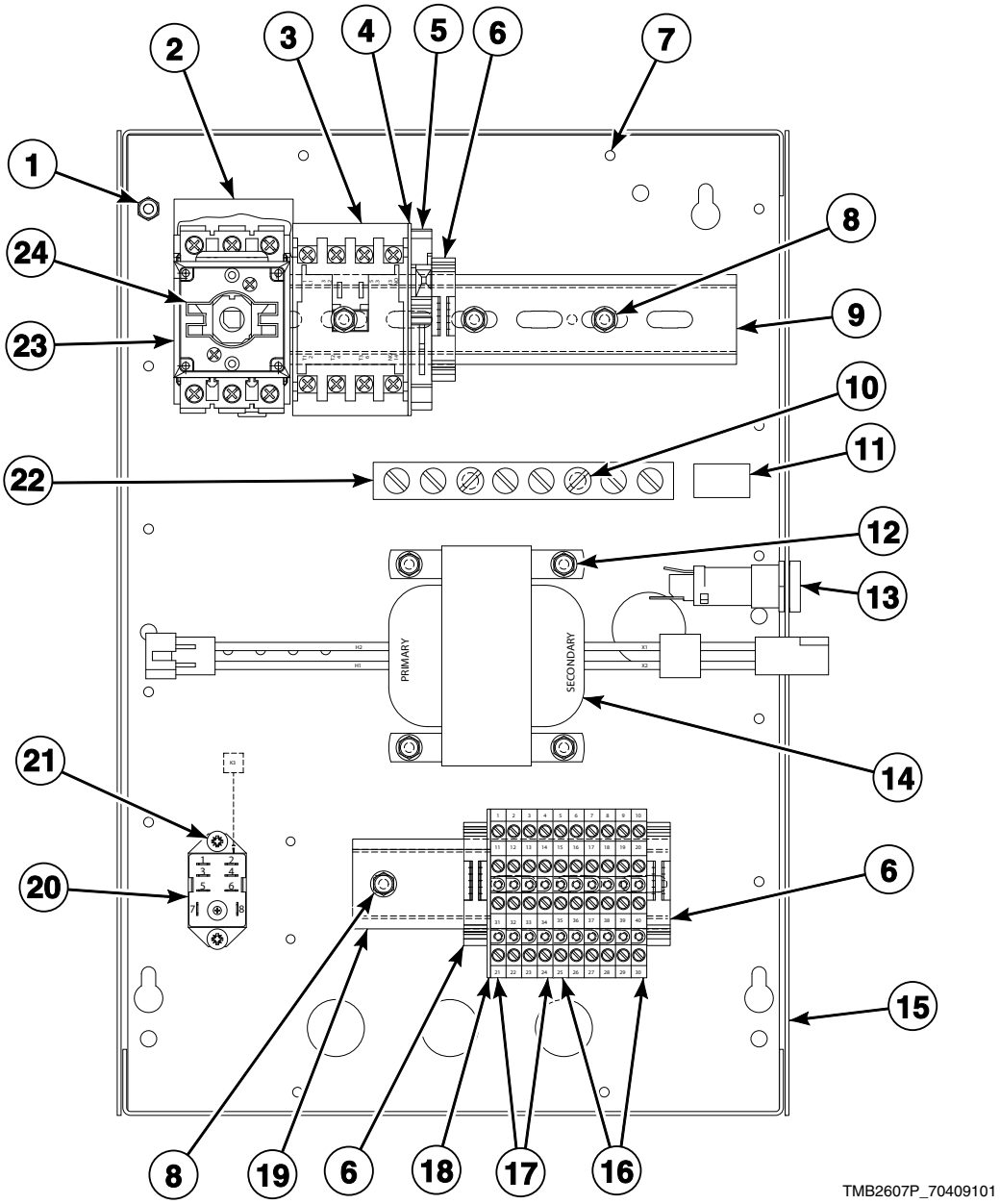

© Copyright, Alliance Laundry Systems LLC – DO NOT COPY or TRANSMIT

Contactor Box Assembly (Drawing 7 of 21)

REF	PART NO.	DESCRIPTION	COMMENTS
	44010701	Gas Relay Harness	
	M412641	Transformer Harness Assembly	Secondary
	M412642	Transformer Harness Assembly	Primary; 240 Volt
	M412650	Junction Box Cover	Use 2 of M400713 Drive Rivet to secure cover to junction box; Use M412368 Door Interlock to mount M412208 Handle to cover
	44324001	Warning Label	Extended tumble; On junction box cover
1	430497	Screw	18 required; To secure junction box to backplane
2	M412366	Finger Guard	20 Amp
3	70323701P	Contactor	9 Amp
4	M412540	End Section	
5	M412537	Terminal Block	Primary; Use D502593 Fuse
6	70121001	End Stop	3 required
7	N/A	Junction Box Bottom	
8	51780	Screw	5 required
9	N/A	Din Rail	
10	M412688	Nut	2 required
11	M412096	Earth Terminal Sticker	
12	33562	Screw	
13	D502591P	Fuse Holder Kit	Includes D502591 Fuse Holder Body and D502811 Fuse Carrier
	D502592	Fuse	3.15 Amp
14	M412477P	Transformer	230 Volt
15	M412649	Junction Box Side	2 required
16	M412631	Terminal Block	2 circuit; 6 required
17	M412632	Terminal Block	1 circuit; 4 required
18	M412633	End Barrier	
19	N/A	Din Rail	
20	M412534	Relay	
21	D501086	Screw	2 required
22	M412656	Ground Buss Assembly	
23	M412187P	Mounting Switch Base	20 Amp
24	M412370	Extension Handle	20 Amp

N/A = Part no longer available

© Copyright, Alliance Laundry Systems LLC – DO NOT COPY or TRANSMIT

Contactor Box Assembly (Drawing 8 of 21)

CE Gas and Steam Models
Models with 3O, 3V, 3X, BC, BL, BU, BX, BY, DO, DV, DX, NC, NR,
NX, NY, OM, ZC, ZR, ZX and ZY Control Suffixes and SD and SX Control Suffixes Through 12/31/06;
230 Volt/50 Hertz/1 Phase

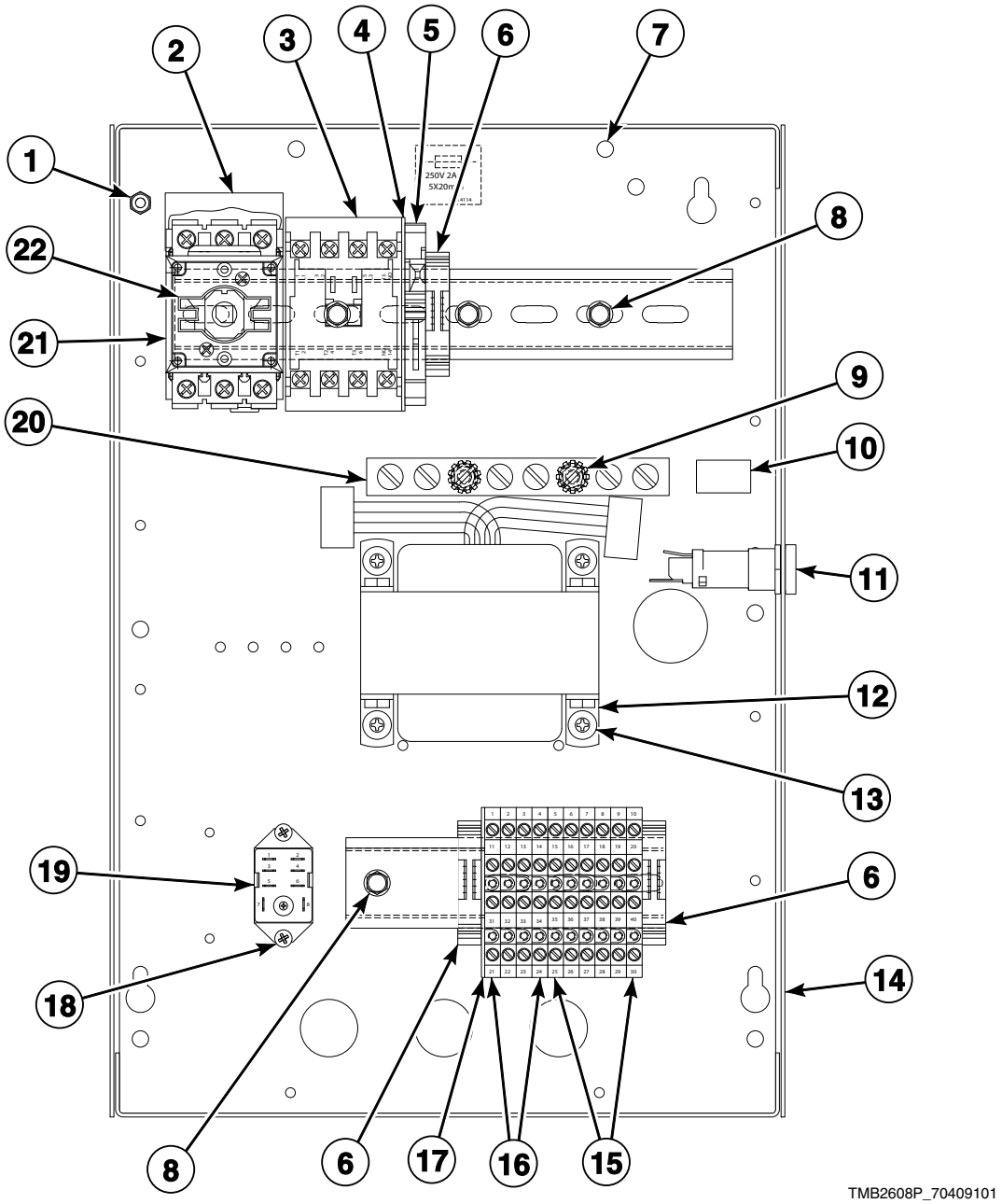

© Copyright, Alliance Laundry Systems LLC – DO NOT COPY or TRANSMIT

Contactor Box Assembly (Drawing 8 of 21)

REF	PART NO.	DESCRIPTION	COMMENTS
	M413863	Network Capacitor Assembly	3O, 3V, 3X, DO, DV, DX and OM control suffixes
	M414224	Relay Harness Assembly	Gas models; 3O, 3V, 3X, BC, BL, BU, BX, BY, DO, DV, DX, OM, SD and SX control suffixes
	M414032	Relay Harness Assembly	Steam models
	M414076	Transformer Harness Assembly	Primary; 3O, 3V, 3X, BC, BL, BU, BX, BY, DO, DV, DX, OM, SD and SX control suffixes
	M414029	Transformer Harness Assembly	Secondary; 3O, 3V, 3X, BC, BL, BU, BX, BY, DO, DV, DX, OM, SD and SX control suffixes
	44010701	Gas Relay Harness	
	M413506	Jumper Harness Assembly	208 Volt; 3O, 3V, 3X, BC, BL, BU, BX, BY, DO, DV and DX control suffixes
	M413507	Jumper Configuration Assembly	240 Volt; Gas models with OM control suffix; Steam models
	44043101	Transformer Harness	Secondary; B and C models; DO, DV and DX control suffixes
	M412650	Junction Box Cover	Use 2 of M400713 Drive Rivet to secure cover to junction box; Use M412368 Door Interlock to mount M412208 Handle to cover
	44324001	Warning Label	Extended tumble; On junction box cover
1	430497	Screw	18 required; To secure junction box to backplane
2	M412366	Finger Guard	20 Amp
3	70323701P	Contactor	9 Amp
4	M412540	End Section	
5	M412537	Terminal Block	Primary; Use M413867 Fuse
6	70121001	End Stop	3 required
7	N/A	Junction Box Bottom	
8	51780	Screw	5 required
9	M412688	Nut	2 required
10	M412096	Earth Terminal Sticker	
11	D502591P	Fuse Holder Kit	Includes D502591 Fuse Holder Body and D502811 Fuse Carrier
	M413889	Fuse	4 Amp
12	M414228P	Transformer	Dual secondary; Multitap; 100-240 Volt
13	M400044	Screw	4 required; Use with 4 of 23951 Nut to attach item 12
14	M412649	Junction Box Side	2 required
15	M412631	Terminal Block	2 circuit; 6 required
16	M412632	Terminal Block	1 circuit; 4 required
17	M412633	End Barrier	
18	M400071	Screw	2 required; Gas models
19	M412534	Relay	24 Volt; Gas models
20	M412656	Ground Buss Assembly	
21	M412187P	Mounting Switch Base	20 Amp
22	M412370	Extension Handle	20 Amp

N/A = Part no longer available

© Copyright, Alliance Laundry Systems LLC – DO NOT COPY or TRANSMIT

Contactor Box Assembly (Drawing 9 of 21)

CE Gas and Steam C, H, S, and U Models
Models with QT Control Suffix and SD and SX Control Suffixes Starting 1/1/07;
230 Volt/50 Hertz/1 Phase

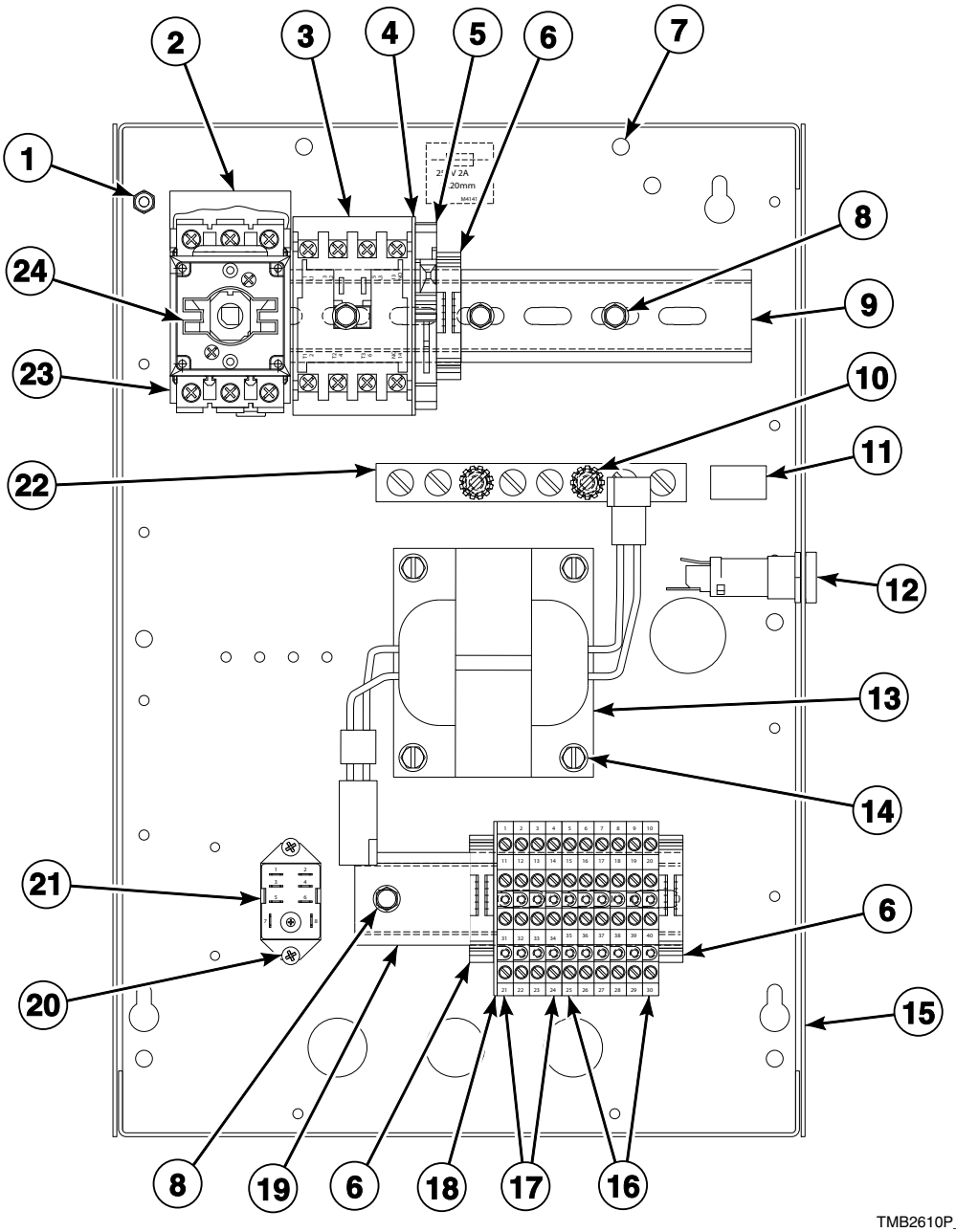

TMB2610P_70409101

© Copyright, Alliance Laundry Systems LLC – DO NOT COPY or TRANSMIT

Contactor Box Assembly (Drawing 9 of 21)

REF	PART NO.	DESCRIPTION	COMMENTS
	M414224	Relay Harness Assembly	Gas models
	M414032	Relay Harness Assembly	Steam models
	M412642	Transformer Harness Assembly	Primary
	M412641	Transformer Harness Assembly	Secondary
	M414224	Relay Harness Assembly	SD and SX control suffixes
	M413506	Jumper Harness Assembly	208 or 240 Volt
	M412650	Junction Box Cover	Use 2 of M400713 Drive Rivet to secure cover to junction box; Use M412368 Door Interlock to mount M412208 Handle to cover
	44324001	Warning Label	Extended tumble; On junction box cover
1	430497	Screw	17 required; To secure junction box to backplane
2	M412366	Finger Guard	20 Amp
3	70323701P	Contactor	9 Amp
4	M412540	End Section	
5	M412537	Terminal Block	Primary; Use 502593 Fuse
6	70121001	End Stop	3 required
7	N/A	Junction Box Bottom	
8	51780	Screw	4 required
9	N/A	Din Rail	
10	M412688	Nut	2 required
11	M412096	Earth Terminal Sticker	
12	D502591P	Fuse Holder Kit	Includes D502591 Fuse Holder Body and D502811 Fuse Carrier
	M413889	Fuse	4 Amp
13	M412477P	Transformer	Multitap; 100-240 Volt
14	33562	Screw	4 required
15	M412649	Junction Box Side	2 required
16	M412631	Terminal Block	2 circuit; 6 required
17	M412632	Terminal Block	1 circuit; 4 required
18	M412633	End Barrier	
19	N/A	Din Rail	
20	D501086	Screw	2 required; Gas models
21	M412534	Relay	24 Volt; Gas models
22	M412656	Ground Buss Assembly	
23	M412187P	Mounting Switch Base	20 Amp
24	M412370	Extension Handle	20 Amp

N/A = Part no longer available

© Copyright, Alliance Laundry Systems LLC – DO NOT COPY or TRANSMIT

Contactor Box Assembly (Drawing 10 of 21)

CE Gas and Steam C, H, S, and U Models
Models with QT and RQ Control Suffixes and SD and SX Control Suffixes Starting 1/1/07;
380 or 400-415 Volt/50 Hertz/3 Phase

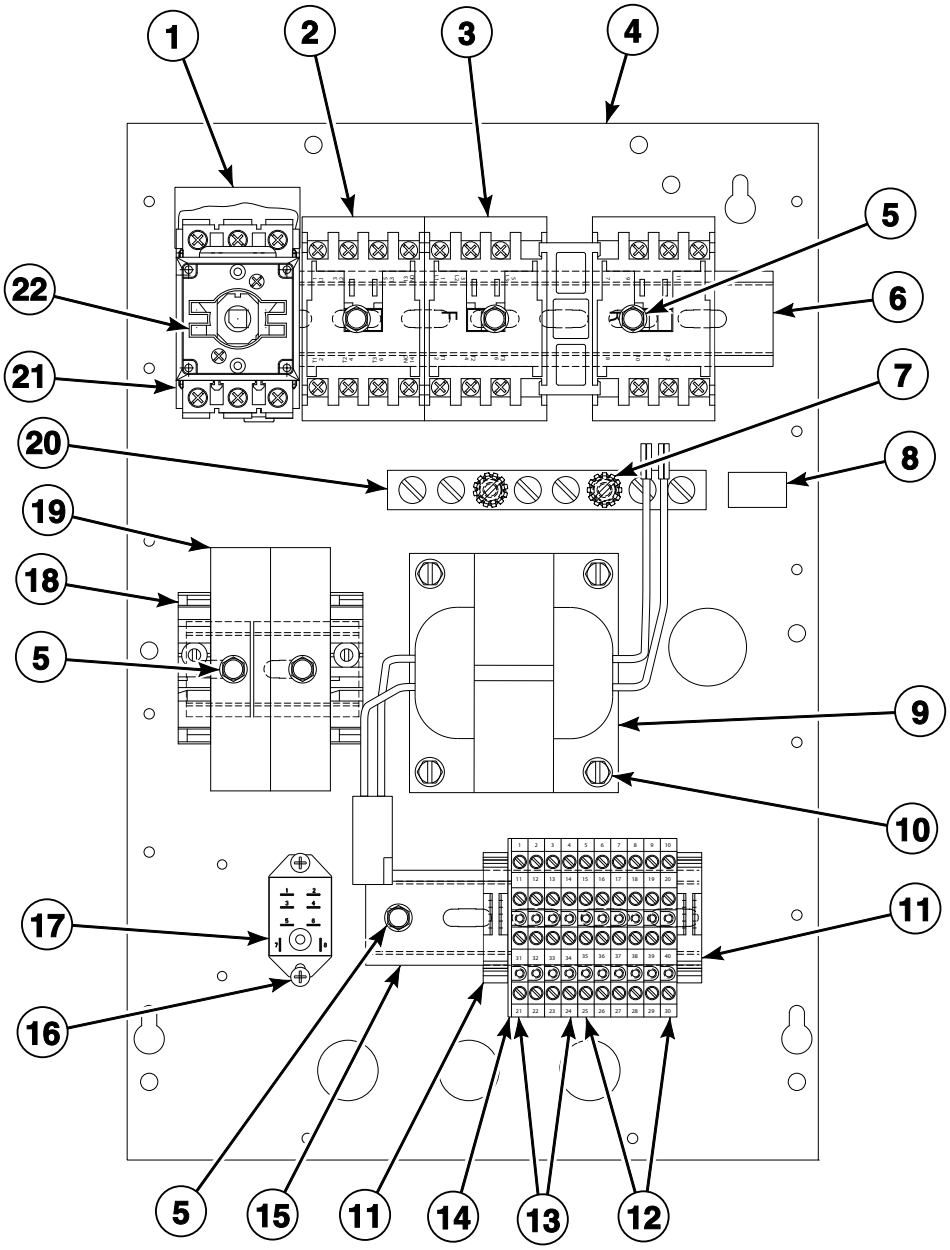

TMB2613P_70409101

© Copyright, Alliance Laundry Systems LLC – DO NOT COPY or TRANSMIT

Contactor Box Assembly (Drawing 10 of 21)

REF	PART NO.	DESCRIPTION	COMMENTS
	M414224	Relay Harness Assembly	Gas models
	M414032	Relay Harness Assembly	Steam models
	M412641	Transformer Harness Assembly	Secondary
	M412928	Reversing Jumper Harness Assembly	Upper; 2 required; RQ control suffix
	M412929	Reversing Jumper Harness Assembly	Lower; RQ control suffix
	M414034	Reversing Contactor Harness Assembly	RQ control suffix
	M412650	Junction Box Cover	
	44324001	Warning Label	Extended tumble; On junction box cover
1	M412366	Finger Guard	20 Amp
2	70323701P	Contactor	9 Amp
3	M412405P	Reversing Contactor	RQ control suffix
4	N/A	Junction Box Bottom	
5	51780	Screw	7 required
6	N/A	Din Rail	
7	M412688	Nut	2 required
8	M412096	Earth Terminal Sticker	
9	M412412P	Transformer	
10	33562	Screw	4 required; Use with 4 of 23951 Nut to attach item 9
11	70121001	End Stop	2 required
12	M412631	Terminal Block	2 circuit; 6 required
13	M412632	Terminal Block	1 circuit; 4 required
14	M412633	End Barrier	
15	N/A	Din Rail	
16	M400071	Screw	Gas models
17	M412534	Relay	Gas models
18	M412615	End Stop	2 required
19	M412538	Terminal Block	400 Volt; Primary; 2 required; Use M412996 Fuse
20	M412656	Ground Buss Assembly	
21	M412187P	Mounting Switch Base	20 Amp
22	M412370	Extension Handle	20 Amp

N/A = Part no longer available

© Copyright, Alliance Laundry Systems LLC – DO NOT COPY or TRANSMIT

Contactor Box Assembly (Drawing 11 of 21)

CE Steam Models Except G, K and L Models
Models with MT, QT, RQ and RT Control Suffixes and SD and SX Control Suffixes Starting 1/1/07;
380 or 400-415 Volt/50 Hertz/3 Phase

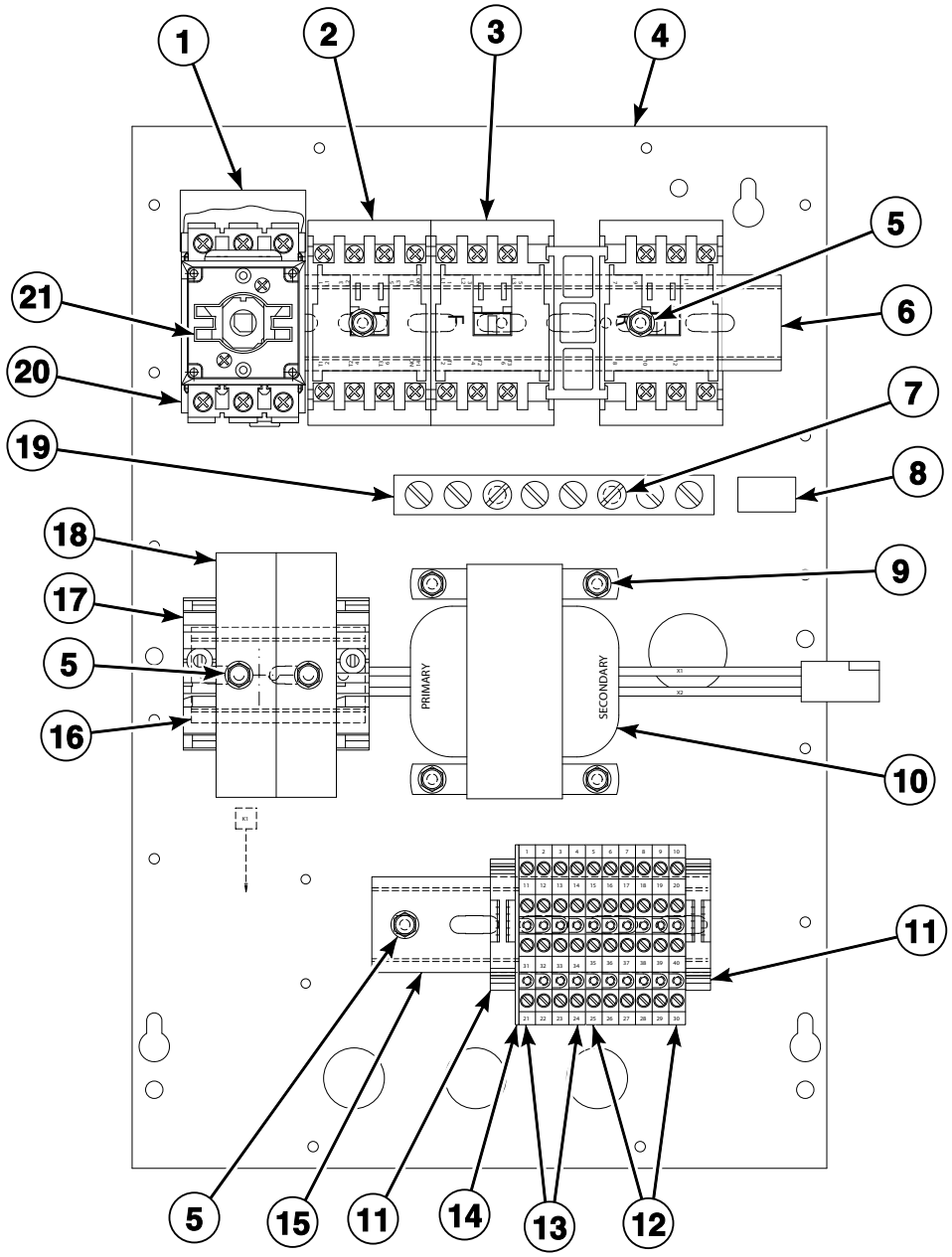

TMB2616P_70409101

© Copyright, Alliance Laundry Systems LLC – DO NOT COPY or TRANSMIT

Contactor Box Assembly (Drawing 11 of 21)

REF	PART NO.	DESCRIPTION	COMMENTS
	M412641	Transformer Harness Assembly	Secondary
	M412928	Reversing Jumper Harness Assembly	Upper; 2 required; RQ and RT control suffixes
	M412929	Reversing Jumper Harness Assembly	Lower; RQ and RT control suffixes
	M412650	Junction Box Cover	
	44324001	Warning Label	Extended tumble; On junction box cover
1	M412366	Finger Guard	20 Amp
2	70323701P	Contactor	9 Amp
3	M412405P	Reversing Contactor	RQ and RT control suffixes
4	N/A	Junction Box Bottom	
5	51780	Screw	7 required
6	N/A	Din Rail	
7	M412688	Nut	2 required
8	M412096	Earth Terminal Sticker	
9	33562	Screw	4 required
10	M412412P	Transformer	400 Volt
11	70121001	End Stop	2 required
12	M412631	Terminal Block	2 circuit; 6 required
13	M412632	Terminal Block	1 circuit; 4 required
14	M412633	End Barrier	
15	N/A	Din Rail	
16	N/A	Din Rail	
17	M412615	End Stop	2 required
18	M412538	Terminal Block	400 Volt; Primary; 2 required; Use M412996 Fuse
19	M412656	Ground Buss Assembly	
20	M412187P	Mounting Switch Base	20 Amp
21	M412370	Extension Handle	20 Amp

N/A = Part no longer available

© Copyright, Alliance Laundry Systems LLC – DO NOT COPY or TRANSMIT

Contactor Box Assembly (Drawing 12 of 21)

CE Steam Models
Models with 3O, 3V, 3X, DO, DV, DX, OM, R3, RD and RM Control Suffixes;
380 or 400-415 Volt/50 Hertz/3 Phase

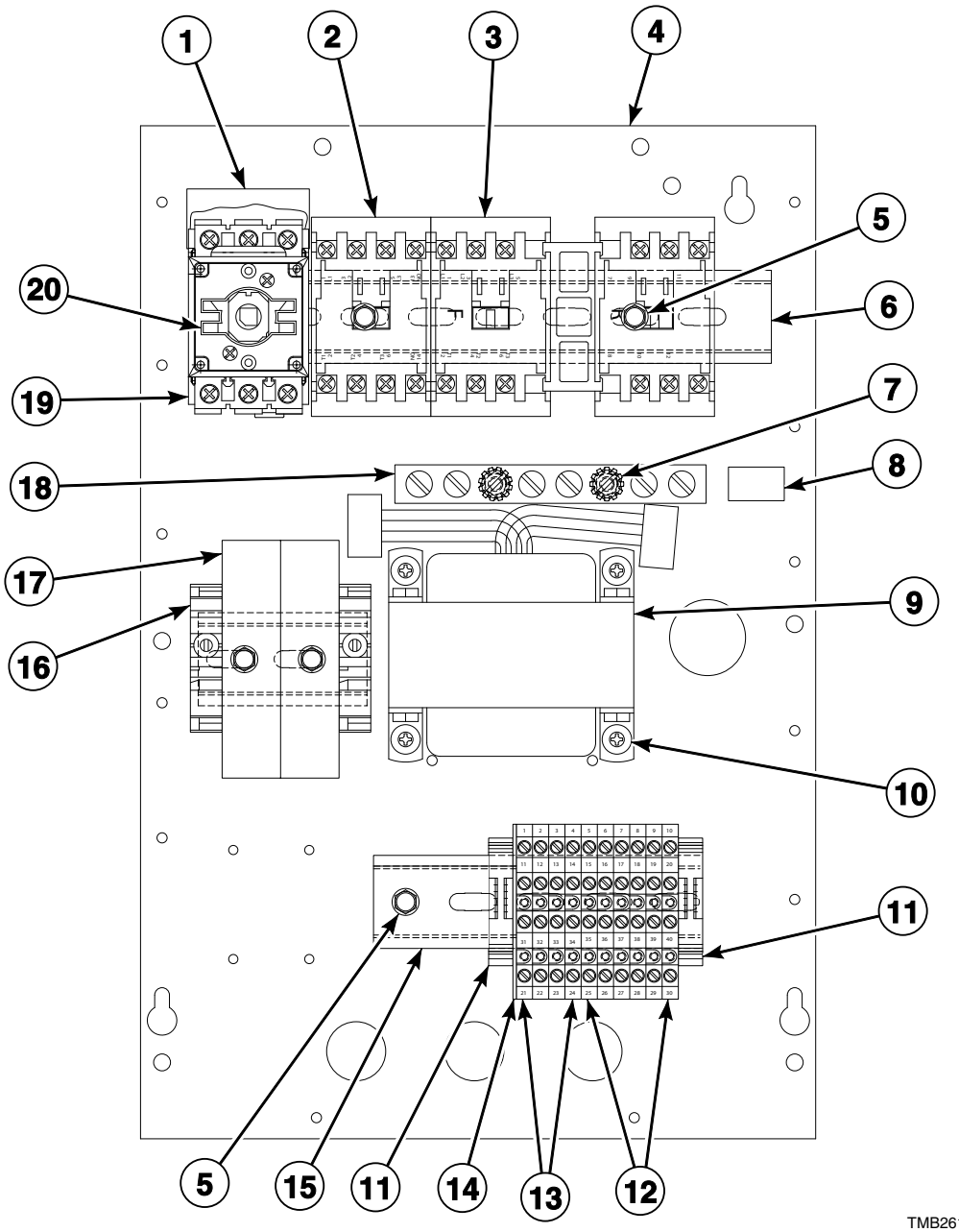

TMB2618P_70409101

© Copyright, Alliance Laundry Systems LLC – DO NOT COPY or TRANSMIT

Contactor Box Assembly (Drawing 12 of 21)

REF	PART NO.	DESCRIPTION	COMMENTS
	M414032	Relay Harness Assembly	
	M414028	Transformer Harness Assembly	Primary
	M414029	Transformer Harness Assembly	Secondary; 3O, 3V, 3X, DV, DX, OM, R3 and RM control suffixes
	44043101	Transformer Harness	Secondary; DO, DV, DX and RD control suffixes
	M414077	Jumper Wire	
	M413508	Jumper Harness Assembly	380 Volt
	M412928	Reversing Jumper Harness Assembly	Upper; 2 required; R3, RD and RM control suffixes
	M412929	Reversing Jumper Harness Assembly	Lower; R3, RD and RM control suffixes
	M414034	Reversing Contactor Harness Assembly	R3, RD and RM control suffixes
	M413863	Network Capacitor Assembly	
	M412650	Junction Box Cover	
	44324001	Warning Label	Extended tumble; On junction box cover
1	M412366	Finger Guard	20 Amp
2	70323701P	Contactor	9 Amp
3	M412405P	Reversing Contactor	R3, RD and RM control suffixes
4	N/A	Junction Box Bottom	
5	51780	Screw	7 required
6	N/A	Din Rail	
7	M412688	Nut	2 required
8	M412096	Earth Terminal Sticker	
9	M414229P	Transformer	
10	M400044	Screw	4 required; Use with 4 of 23951 Nut to attach item 9
11	70121001	End Stop	230 Volt; 2 required
12	M412631	Terminal Block	2 circuit; 6 required
13	M412632	Terminal Block	1 circuit; 4 required
14	M412633	End Barrier	
15	N/A	Din Rail	
16	M412615	End Stop	2 required
17	M412538	Terminal Block	400 Volt; Primary; 2 required; Use M413621 Fuse
18	M412656	Ground Buss Assembly	
19	M412187P	Mounting Switch Base	20 Amp
20	M412370	Extension Handle	20 Amp

N/A = Part no longer available

© Copyright, Alliance Laundry Systems LLC – DO NOT COPY or TRANSMIT

Contactor Box Assembly (Drawing 13 of 21)

CE Electric Models Except G, K and L Models
Models with CD, CX, CY, MT, QT, RQ and RT Control Suffixes and SD and SX Control Suffixes Starting 1/1/07;
230 Volt/50 Hertz/3 Phase

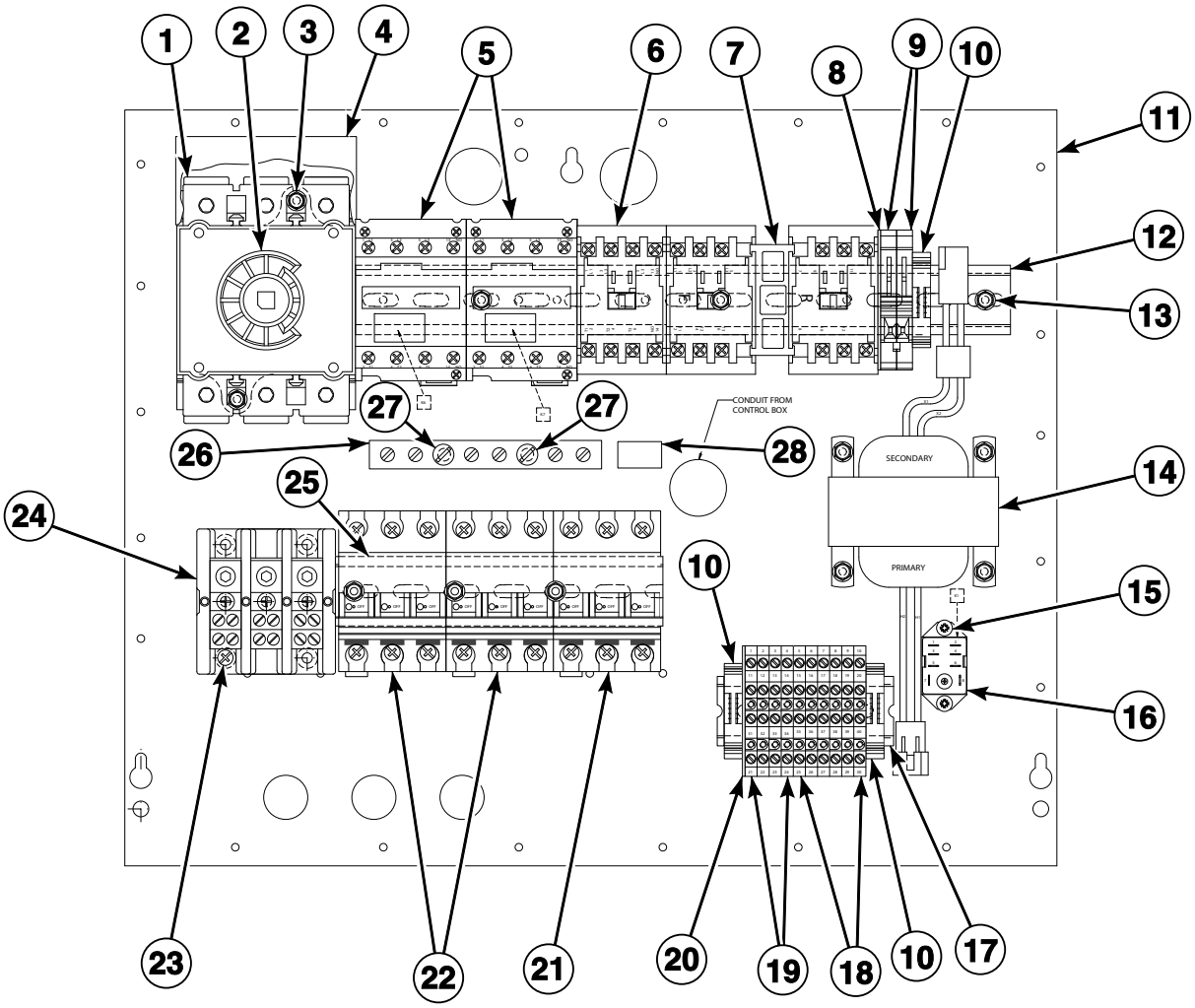

TMB2621P_70409101

© Copyright, Alliance Laundry Systems LLC – DO NOT COPY or TRANSMIT

Contactor Box Assembly (Drawing 13 of 21)

REF	PART NO.	DESCRIPTION	COMMENTS
	M412776P	Relay Harness Assembly	MT and RT control suffixes
	M412777	Relay Harness Assembly	CD, CX and CY control suffixes
	M414149	Relay Harness Assembly	QT, RQ and SD control suffixes
	M412641	Transformer Harness Assembly	Secondary
	M412642	Transformer Harness Assembly	Primary
	M412871	Jumper Harness Assembly	240 Volt
	M412740	Jumper Cable Wire	8 gauge; 6 required
	M412928	Reversing Jumper Harness Assembly	Upper; 2 required; RQ and RT control suffixes
	M412929	Reversing Jumper Harness Assembly	Lower; RQ and RT control suffixes
	44014501	Jumper Wire	3 required
	44014601	Jumper Wire	3 required
	44014701	Jumper Wire	3 required
	M413934	Jumper Cable Assembly	3 required
	44014901P	Power Distribution Block Cover	Includes 2 screws; Use with item 24
	M412265	Contactor Box Cover	
	44324001	Warning Label	Extended tumble; On contactor box cover
1	M412186	Mounting Switch Base	100 Amp
2	M412371P	Extension Handle	100 Amp
3	33562	Screw	6 required
4	M412367	Finger Guard	100 Amp
5	70343301P	Contactor	Electric; 50 Amp; 2 required
6	70323701P	Contactor	Motor; 9 Amp
7	M412405P	Reversing Contactor	RQ and RT control suffixes
8	M412540	End Section	230 Volt
9	M412537	Terminal Block	230 Volt; Primary; 2 required; Use 502593 Fuse
10	70121001	End Stop	3 required
11	M412267	Contactor Box Bottom	
12	N/A	Din Rail	13 inches
13	51780	Screw	12 required
14	M412477P	Transformer	240 Volt
15	D501086	Screw	2 required; MT and RT control suffixes
16	M412534	Relay	24 Volt; MT and RT control suffixes
17	M412692	Din Rail	3.5 inches
18	M412631	Terminal Block	2 circuit; 6 required
19	M412632	Terminal Block	1 circuit; 4 required
20	M412633	End Barrier	
21	M412407P	Circuit Breaker	3 pole; 8 Amp
22	M412408P	Circuit Breaker	3 pole; 50 Amp; 2 required
23	39733	Screw	4 required
24	M413865	Power Distribution Block	3 pole
25	M412693	Din Rail	6.5 inches
26	M412656	Ground Buss Assembly	
27	M412688	Nut	2 required
28	M412096	Earth Terminal Sticker	

N/A = Part no longer available

© Copyright, Alliance Laundry Systems LLC – DO NOT COPY or TRANSMIT

Contactor Box Assembly (Drawing 14 of 21)

CE Electric Models Except G, K and L Models
Models with CD, CX, CY, MT, QT, RQ and RT Control Suffixes and SD and SX Control Suffixes Starting 1/1/07;
380 or 415 Volt/50 Hertz/3 Phase

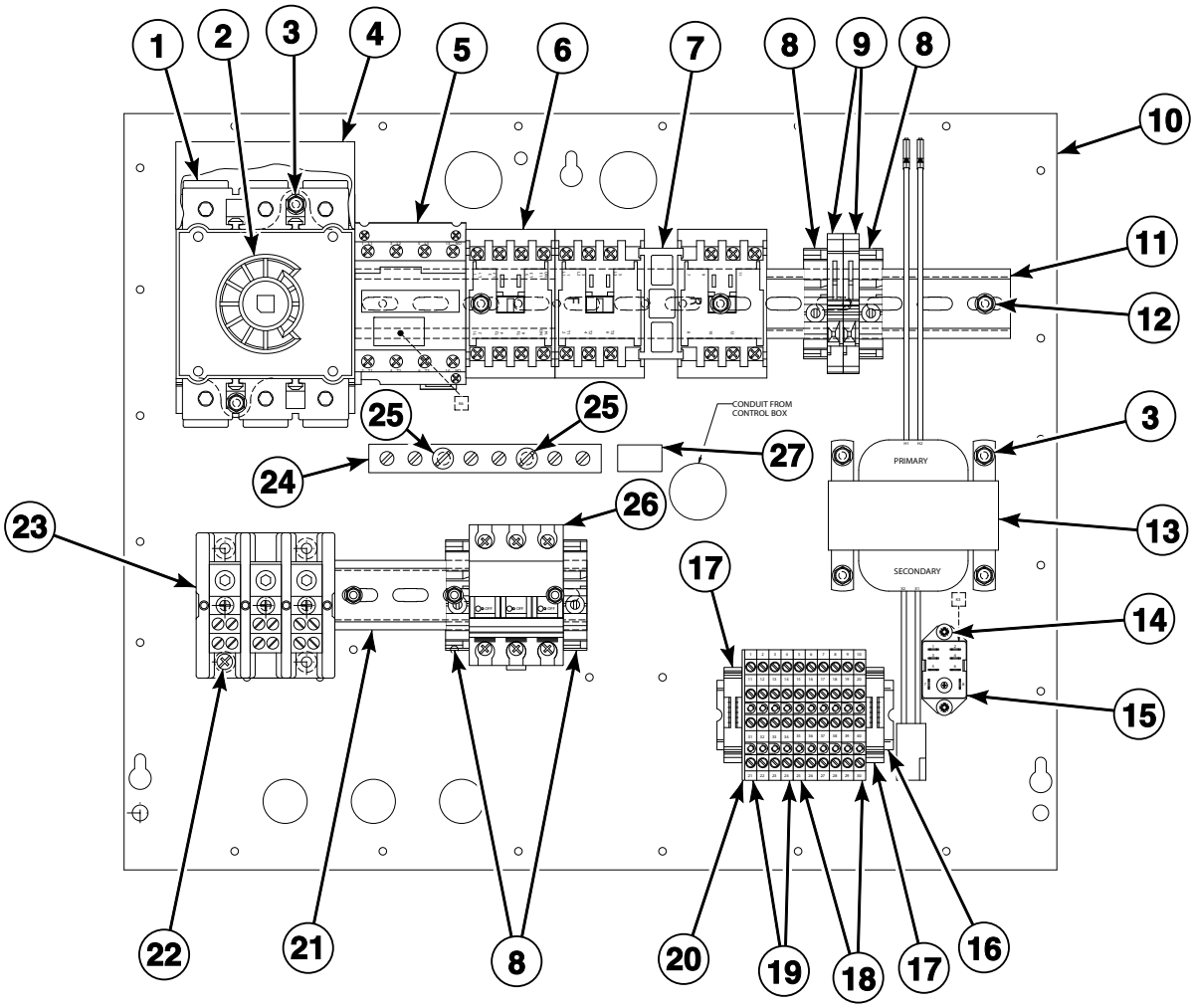

TMB2622P_70409101

© Copyright, Alliance Laundry Systems LLC – DO NOT COPY or TRANSMIT

Contactor Box Assembly (Drawing 14 of 21)

REF	PART NO.	DESCRIPTION	COMMENTS
	M412766	Relay Harness Assembly	MT and RT control suffixes
	M414150	Relay Harness Assembly	QT, RQ, SD and SX control suffixes
	M412641	Transformer Harness Assembly	Secondary
	M414121	Jumper Cable Assembly	8 gauge; 3 required
	M412928	Reversing Jumper Harness Assembly	Upper; 2 required; RQ and RT control suffixes
	M412929	Reversing Jumper Harness Assembly	Lower; RQ and RT control suffixes
	44014501	Jumper Wire	3 required
	44014801	Jumper Wire	3 required
	M413934	Jumper Cable Assembly	3 required
	44014901P	Power Distribution Block Cover	Includes 2 screws; Use with item 23
	M412265	Contactor Box Cover	
	44324001	Warning Label	Extended tumble; On contactor box cover
1	M412186	Mounting Switch Base	100 Amp
2	M412371P	Extension Handle	100 Amp
3	33562	Screw	6 required
4	M412367	Finger Guard	100 Amp
5	70343301P	Contactor	Electric; 50 Amp
6	70323701P	Contactor	Motor; 9 Amp
7	M412405P	Reversing Contactor	RQ and RT control suffixes
8	M412615	End Stop	400 Volt; 4 required
9	M412538	Terminal Block	400 Volt; Primary; 2 required; Use M412996 Fuse
10	M412267	Contactor Box Bottom	
11	N/A	Din Rail	13 inches
12	51780	Screw	10 required
13	M412412P	Transformer	400 Volt
14	D501086	Screw	2 required; MT and RT control suffixes
15	M412534	Relay	MT and RT control suffixes
16	M412692	Din Rail	3.5 inches
17	70121001	End Stop	230 Volt; 2 required
18	M412631	Terminal Block	2 circuit; 6 required
19	M412632	Terminal Block	1 circuit; 4 required
20	M412633	End Barrier	
21	N/A	Din Rail	5 inches
22	39733	Screw	4 required
23	M413865	Power Distribution Block	3 pole
24	M412656	Ground Buss Assembly	
25	M412688	Nut	2 required
26	M412407P	Circuit Breaker	3 pole; 8 Amp
27	M412096	Earth Terminal Sticker	

N/A = Part no longer available

© Copyright, Alliance Laundry Systems LLC – DO NOT COPY or TRANSMIT

Contactor Box Assembly (Drawing 15 of 21)

CE Electric Models
Models with 3O, 3V, 3X, BC, BL, BU, BX, BY, DO, DV, DX, NC, NR, NX,
NY, OM, R3, RD, RM, ZC, ZR, ZX and ZY Control Suffixes;
230 Volt/50 Hertz/3 Phase

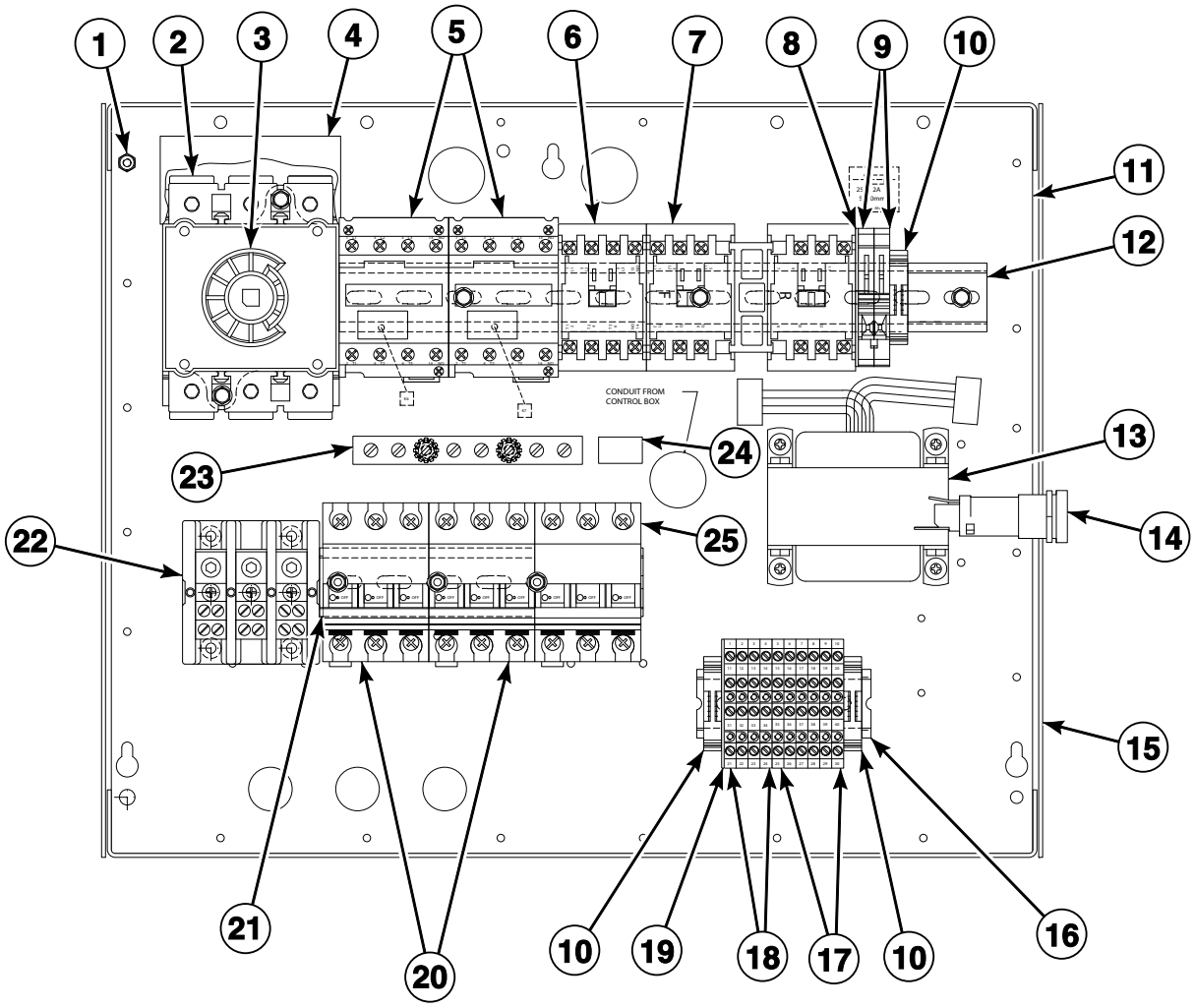

TMB2625P_70409101

© Copyright, Alliance Laundry Systems LLC – DO NOT COPY or TRANSMIT

Contactor Box Assembly (Drawing 15 of 21)

REF	PART NO.	DESCRIPTION	COMMENTS
	M413930P	Ferrite Core Assembly	
	M413863	Network Capacitor Assembly	
	44014901P	Power Distribution Block Cover	Includes 2 screws; Use with item 22
	M412265	Contactor Box Cover	Use 2 of M400713 Drive Rivet to secure cover to junction box; Use M412368 Door Interlock to mount M412208 Handle to cover
	44324001	Warning Label	Extended tumble; On contactor box cover
1	430497	Screw	24 required; Use to secure contactor box to backplane
2	M412186	Mounting Switch Base	100 Amp; Use 2 of 33562 Screw to secure
3	M412371P	Extension Handle	100 Amp
4	M412367	Finger Guard	100 Amp
5	70343301P	Contactor	Electric; 50 Amp; 2 required
6	70323701P	Contactor	Motor; 9 Amp
7	M412405P	Reversing Contactor	R3, RD and RM control suffixes
8	M412540	End Section	230 Volt
9	M412537	Terminal Block	230 Volt; Primary; 2 required; Use M413867 Fuse
10	70121001	End Stop	230 Volt; 3 required for R3, RD and RM control suffixes; 4 required for all other control suffixes
11	M412267	Contactor Box Bottom	
12	N/A	Din Rail	13 inches; Use 51780 Screw to secure
13	M414228P	Transformer	Dual secondary; Multitap; 100-240 Volt; Use 4 of 23951 Nut and 4 of M400044 Screw to secure
14	D502591P	Fuse Holder Kit	Includes D502591 Fuse Holder Body and D502811 Fuse Carrier; Use M413889 Fuse
15	M412266	Contactor Box Side	2 required
16	M412692	Din Rail	3.5 inches; Use 51780 Screw to secure
17	M412631	Terminal Block	2 circuit; 6 required
18	M412632	Terminal Block	1 circuit; 4 required
19	M412633	End Barrier	
20	M412408P	Circuit Breaker	3 pole; 50 Amp; 2 required
21	M412693	Din Rail	6.5 inches; Use 51780 Screw to secure
22	M413865	Power Distribution Block	3 pole; Use 4 of 39733 Screw to secure
23	M412656	Ground Buss Assembly	Use 2 of M412688 Nut to secure
24	M412096	Earth Terminal Sticker	
25	M412407P	Circuit Breaker	3 pole; 8 Amp

N/A = Part no longer available

© Copyright, Alliance Laundry Systems LLC – DO NOT COPY or TRANSMIT

Contactor Box Assembly (Drawing 16 of 21)

CE Electric Models
Models with 3O, 3V, 3X, BC, BL, BU, BX, BY, DO, DV, DX, NC, NR, NX,
NY, OM, R3, RD, RM, ZC, ZR, ZX and ZY Control Suffixes;
380 Volt/50 Hertz/3 Phase; 415 Volt/50 Hertz/3 Phase

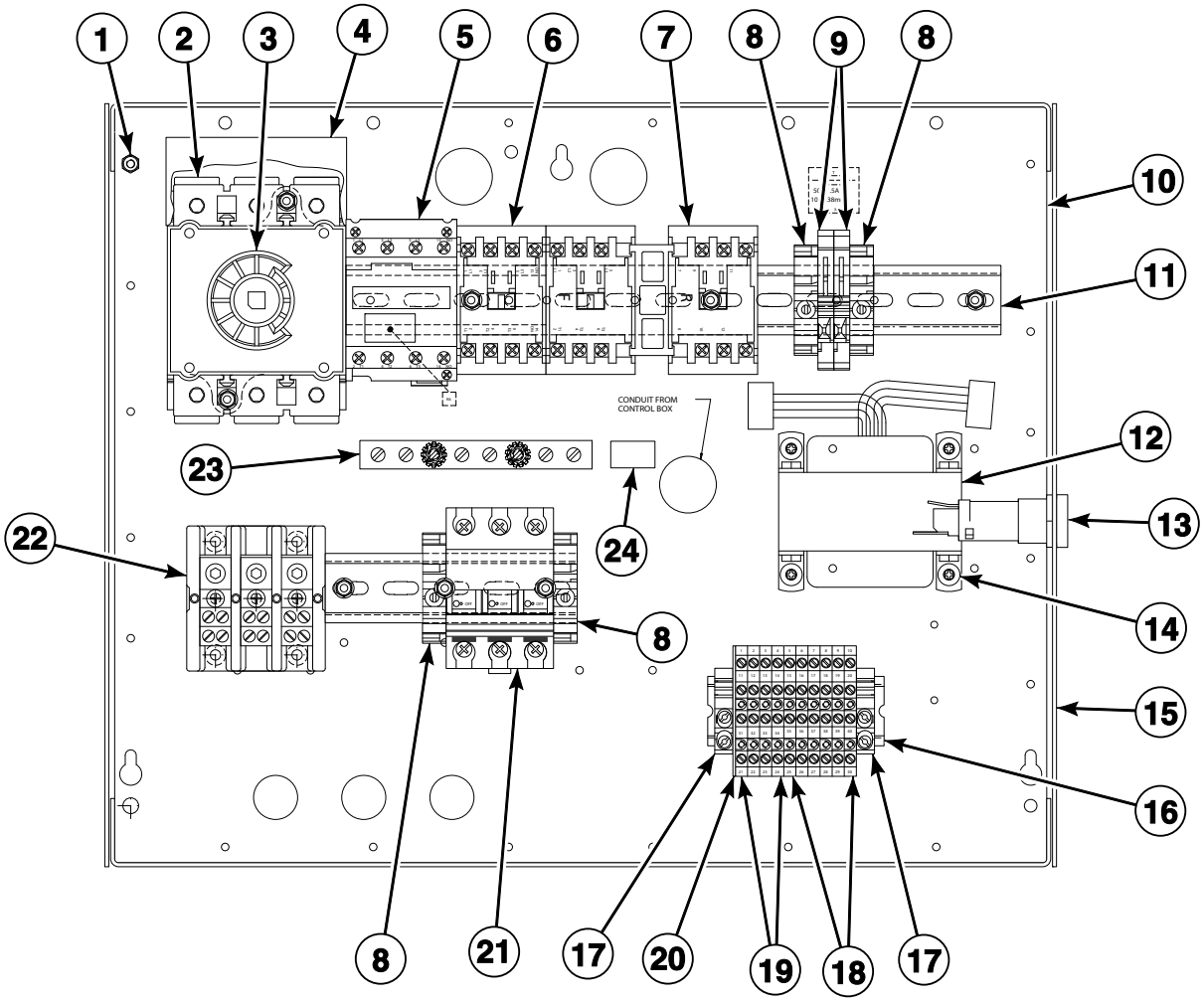

TMB2626P_70409101

© Copyright, Alliance Laundry Systems LLC – DO NOT COPY or TRANSMIT

Contactor Box Assembly (Drawing 16 of 21)

REF	PART NO.	DESCRIPTION	COMMENTS
	M413930P	Ferrite Core Assembly	
	M413863	Network Capacitor Assembly	3O, 3V, 3X, DO, DV, DX, OM, R3, RD and RM control suffixes
	M413508	Jumper Harness Assembly	380 Volt/50 Hertz/3 Phase
	M413509	Jumper Harness Assembly	415 Volt/50 Hertz/3 Phase
	M414121	Jumper Cable Assembly	8 gauge; 3 required
	M414150	Relay Harness Assembly	
	M414034	Reversing Contactor Harness Assembly	R3, RD and RM control suffixes
	M414028	Transformer Harness Assembly	Primary
	M414029	Transformer Harness Assembly	Secondary
	N/A	Jumper Harness Assembly	All control suffixes except DO, DV and DX
	M412928	Reversing Jumper Harness Assembly	Upper; 2 required; R3, RD and RM control suffixes
	M412929	Reversing Jumper Harness Assembly	Lower; R3, RD and RM control suffixes
	44014501	Jumper Wire	3 required
	44014801	Jumper Wire	3 required
	M413934	Jumper Cable Assembly	3 required
	44043101	Transformer Harness	Secondary; DO, DV, DX and RD control suffixes
	44014901P	Power Distribution Block Cover	Includes 2 screws; Use with item 22
	M412265	Contactor Box Cover	Use 2 of M400713 Drive Rivet to secure cover to junction box; Use M412368 Door Interlock to mount M412208 Handle to cover
	44324001	Warning Label	Extended tumble; On contactor box cover
1	430497	Screw	24 required; Use to secure contactor box to backplane
2	M412186	Mounting Switch Base	100 Amp: Use 2 of 33562 Screw to secure
3	M412371P	Extension Handle	100 Amp
4	M412367	Finger Guard	100 Amp
5	70343301P	Contactor	Electric; 50 Amp
6	70323701P	Contactor	Motor; 9 Amp
7	M412405P	Reversing Contactor	RM control suffix
8	M412615	End Stop	400 Volt; 4 required
9	M412538	Terminal Block	400 Volt; Primary; 2 required; Use M413621 Fuse
10	M412267	Contactor Box Bottom	
11	N/A	Din Rail	13 inches; Use 51780 Screw to secure
12	M414229P	Transformer	Multitap; 380-480 Volt
13	D502591P	Fuse Holder Kit	Includes D502591 Fuse Holder Body and D502811 Fuse Carrier; Use M413889 Fuse
14	M400044	Screw	4 required; Use with 4 of 23951 Nut to secure item 12
15	M412266	Contactor Box Side	2 required
16	M412692	Din Rail	3.5 inches; Use 51780 Screw to secure
17	70121001	End Stop	2 required
18	M412631	Terminal Block	2 circuit; 6 required
19	M412632	Terminal Block	1 circuit; 4 required
20	M412633	End Barrier	
21	M412407P	Circuit Breaker	3 pole; 8 Amp
22	M413865	Power Distribution Block	3 pole; Use 4 of 39733 Screw to secure
23	M412656	Ground Buss Assembly	Use 2 of M412688 Nut to secure
24	M412096	Earth Terminal Sticker	

N/A = Part no longer available

© Copyright, Alliance Laundry Systems LLC – DO NOT COPY or TRANSMIT

Contactor Box Assembly (Drawing 17 of 21)

CE Electric C, H, S and U Models
Models with QT and RQ Control Suffixes and SD and SX Control Suffixes Starting 1/1/07;
230 Volt/50 Hertz/3 Phase

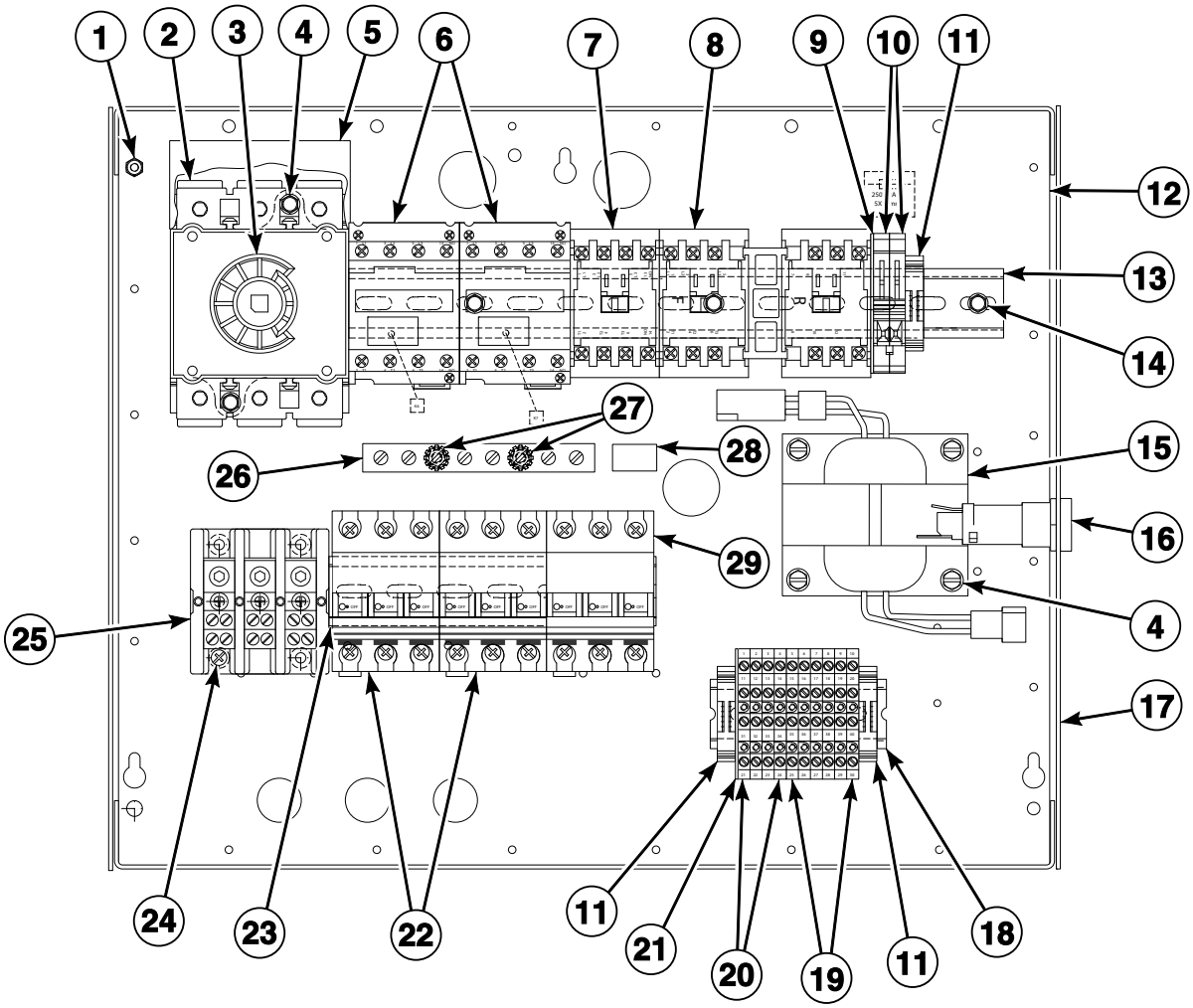

TMB2722P_70409101

© Copyright, Alliance Laundry Systems LLC – DO NOT COPY or TRANSMIT

Contactor Box Assembly (Drawing 17 of 21)

REF	PART NO.	DESCRIPTION	COMMENTS
	M413930P	Ferrite Core Assembly	
	M412642	Transformer Harness Assembly	Primary
	M412641	Transformer Harness Assembly	Secondary
	M412740	Jumper Cable Wire	8 gauge; 6 required
	M414034	Reversing Contactor Harness Assembly	RQ control suffix
	M412928	Reversing Jumper Harness Assembly	Upper; 2 required; RQ control suffix
	M412929	Reversing Jumper Harness Assembly	Lower; RQ control suffix
	M413506	Jumper Harness Assembly	208 Volt
	44014501	Jumper Wire	3 required
	44014601	Jumper Wire	3 required
	44014701	Jumper Wire	3 required
	M413934	Jumper Cable Assembly	3 required
	44014901P	Power Distribution Block Cover	Includes 2 screws; Use with item 25
	M412265	Contactor Box Cover	Use 2 of M400713 Drive Rivet to secure cover to junction box; Use M412368 Door Interlock to mount M412208 Handle to cover
	44324001	Warning Label	Extended tumble; On contactor box cover
1	430497	Screw	23 required; To secure contactor box to backplane
2	M412186	Mounting Switch Base	100 Amp
3	M412371P	Extension Handle	100 Amp
4	33562	Screw	6 required
5	M412367	Finger Guard	100 Amp
6	70343301P	Contactor	Electric; 50 Amp; 2 required
7	70323701P	Contactor	Motor; 9 Amp
8	M412405P	Reversing Contactor	RQ control suffix
9	M412540	End Section	230 Volt
10	M412537	Terminal Block	230 Volt; Primary; 2 required; Use D502593 Fuse
11	70121001	End Stop	230 Volt; 3 required
12	M412267	Contactor Box Bottom	
13	N/A	Din Rail	13 inches
14	51780	Screw	7 required
15	M412477P	Transformer	Multitap; 100-240 Volt
16	D502591P	Fuse Holder Kit	Includes D502591 Fuse Holder Body and D502811 Fuse Carrier; Use M413889 Fuse
17	M412266	Contactor Box Side	2 required
18	M412692	Din Rail	3.5 inches
19	M412631	Terminal Block	2 circuit; 6 required
20	M412632	Terminal Block	1 circuit; 4 required
21	M412633	End Barrier	
22	M412408P	Circuit Breaker	3 pole; 50 Amp; 2 required
23	M412693	Din Rail	6.5 inches
24	39733	Screw	4 required
25	M413865	Power Distribution Block	3 pole
26	M412656	Ground Buss Assembly	
27	M412688	Nut	2 required
28	M412096	Earth Terminal Sticker	
29	M412407P	Circuit Breaker	3 pole; 8 Amp

N/A = Part no longer available

© Copyright, Alliance Laundry Systems LLC – DO NOT COPY or TRANSMIT

Contactor Box Assembly (Drawing 18 of 21)

CE Electric C, H, S and U Models
Models with QT and RQ Control Suffixes and SD and SX Control Suffixes Starting 1/1/07;
380 Volt/50 Hertz/3 Phase; 415 Volt/50 Hertz/3 Phase

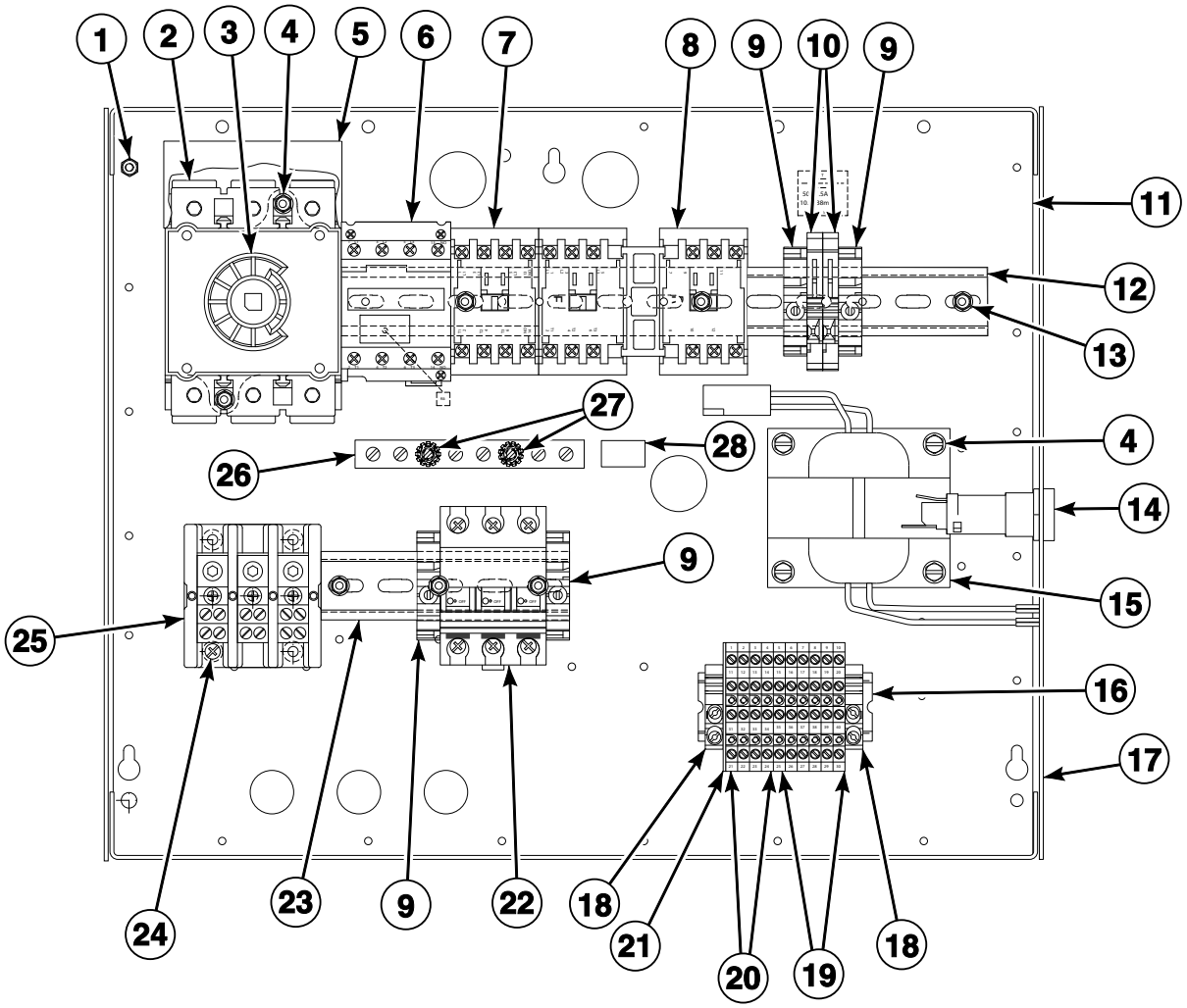

TMB2723P_70409101

© Copyright, Alliance Laundry Systems LLC – DO NOT COPY or TRANSMIT

Contactor Box Assembly (Drawing 18 of 21)

REF	PART NO.	DESCRIPTION	COMMENTS
	M413930P	Ferrite Core Assembly	
	M414150	Relay Harness Assembly	
	M414034	Reversing Contactor Harness Assembly	RQ control suffix
	M412641	Transformer Harness Assembly	Secondary
	M412928	Reversing Jumper Harness Assembly	Upper; 2 required; RQ control suffix
	M412929	Reversing Jumper Harness Assembly	Lower; RQ control suffix
	44014501	Jumper Wire	3 required
	44014801	Jumper Wire	3 required
	M413934	Jumper Cable Assembly	3 required
	M414121	Jumper Cable Assembly	8 gauge; 3 required
	44014901P	Power Distribution Block Cover	Includes 2 screws; Use with item 25
	M412265	Contactor Box Cover	Use 2 of M400713 Drive Rivet to secure cover to junction box; Use M412368 Door Interlock to mount M412208 Handle to cover
	44324001	Warning Label	Extended tumble; On contactor box cover
1	430497	Screw	23 required; To secure contactor box to backplane
2	M412186	Mounting Switch Base	100 Amp
3	M412371P	Extension Handle	100 Amp
4	33562	Screw	6 required
5	M412367	Finger Guard	100 Amp
6	70343301P	Contactor	Electric; 50 Amp
7	70323701P	Contactor	Motor; 9 Amp
8	M412405P	Reversing Contactor	RQ control suffix
9	M412615	End Stop	400 Volt; 4 required
10	M412538	Terminal Block	400 Volt; Primary; 2 required; Use M412996 Fuse
11	M412267	Contactor Box Bottom	
12	N/A	Din Rail	13 inches
13	51780	Screw	9 required
14	D502591P	Fuse Holder Kit	Includes D502591 Fuse Holder Body and D502811 Fuse Carrier; Use M413889 Fuse at secondary and M413118 Fuse at primary
15	M412412P	Transformer	Multitap; 380-480 Volt
16	M412692	Din Rail	3.5 inches
17	M412266	Contactor Box Side	2 required
18	70121001	End Stop	2 required
19	M412631	Terminal Block	2 circuit; 6 required
20	M412632	Terminal Block	1 circuit; 4 required
21	M412633	End Barrier	
22	M412407P	Circuit Breaker	3 pole; 8 Amp
23	N/A	Din Rail	5 inches
24	39733	Screw	4 required
25	M413865	Power Distribution Block	3 pole
26	M412656	Ground Buss Assembly	
27	M412688	Nut	2 required
28	M412096	Earth Terminal Sticker	

N/A = Part no longer available

© Copyright, Alliance Laundry Systems LLC – DO NOT COPY or TRANSMIT

Contactor Box Assembly (Drawing 19 of 21)

CE Electric Models
240 Volt/50 Hertz/1 Phase

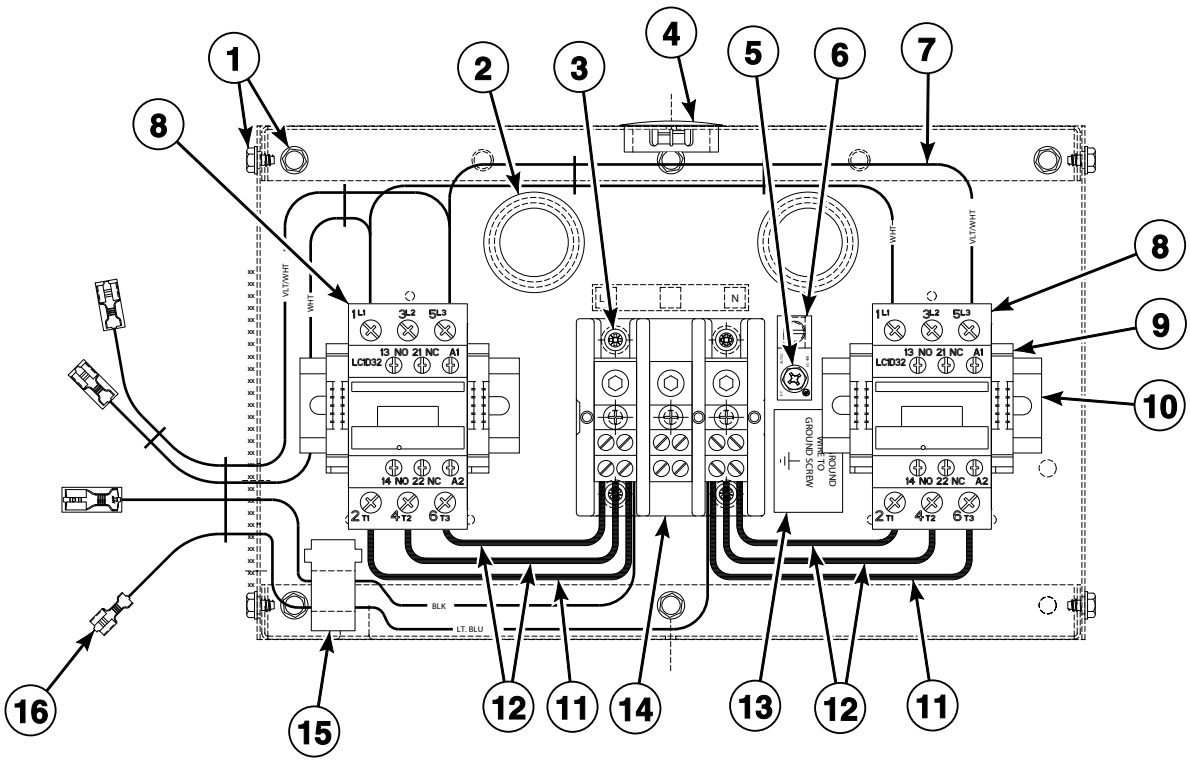

TMB2632P_70409101

© Copyright, Alliance Laundry Systems LLC – DO NOT COPY or TRANSMIT

Contactor Box Assembly (Drawing 19 of 21)

REF	PART NO.	DESCRIPTION	COMMENTS
	M413856	Electric Accessory Box Cover	
	44324001	Warning Label	Extended tumble; On electric accessory box cover
	M4919P3	Electric Heater Contactor Kit	Use to replace contactors on models through 7/10/07
1	51780	Screw	15 required
2	M402542	Snap Bushing	1 3/8 inches; 2 required
3	39733	Screw	4 required
4	N/A	Hole Plug	1 3/8 inches
5	M402917	Screw	Ground
6	M411283	Ground Lug Connector	
7	44129201P	Jumper Harness	
8	70343301P	Contactor	2 required; Models starting 7/10/07
9	M412615	End Stop	4 required; Models starting 7/10/07
10	44137901	Din Rail	2 required; Models starting 7/10/07
11	M413934	Jumper Cable Assembly	2 required
12	M413933	Jumper Cable Assembly	4 required
13	M403047	Secure Ground Label	Electrical
14	M413865	Power Distribution Block	3 pole
15	M413930P	Ferrite Core Assembly	3O, 3V, 3X, DO, DV, DX, OM, R3, RD and RM control suffixes
16	44129001	Accessory Box Harness Assembly	

N/A = Part no longer available

© Copyright, Alliance Laundry Systems LLC – DO NOT COPY or TRANSMIT

Contactor Box Assembly (Drawing 20 of 21)

Electric Models

200 Volt/50 Hertz/3 Phase; 200-208 Volt/60 Hertz/3 Phase; 240 Volt/50 or 60 Hertz/3 Phase

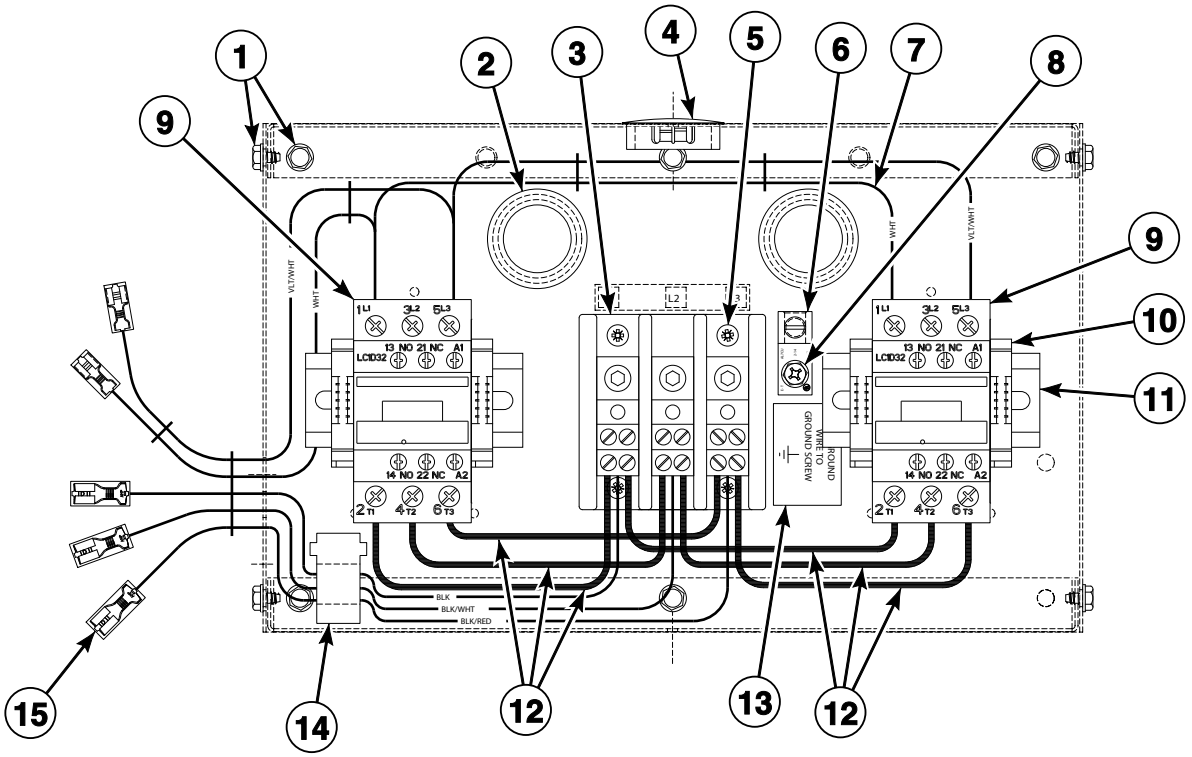

TMB2633P_70409101

© Copyright, Alliance Laundry Systems LLC – DO NOT COPY or TRANSMIT

Contactor Box Assembly (Drawing 20 of 21)

REF	PART NO.	DESCRIPTION	COMMENTS
	M413856	Electric Accessory Box Cover	
	44324001	Warning Label	Extended tumble; On electric accessory box cover
	M4919P3	Electric Heater Contactor Kit	Use to replace contactors on models through 7/10/07
1	51780	Screw	15 required
2	M402542	Snap Bushing	1 3/8 inches; 2 required
3	M413865	Power Distribution Block	3 pole
4	N/A	Hole Plug	1 3/8 inches
5	39733	Screw	4 required
6	M411283	Ground Lug Connector	
7	44129201P	Jumper Harness	
8	M402917	Screw	Ground
9	70343301P	Contactor	2 required; Models starting 7/10/07
10	M412615	End Stop	4 required; Models starting 7/10/07
11	44137901	Din Rail	2 required; Models starting 7/10/07
12	M413933	Jumper Cable Assembly	6 required
13	M403047	Secure Ground Label	Electrical
14	M413930P	Ferrite Core Assembly	3O, 3V, 3X, DO, DV, DX, OM, R3, RD and RM control suffixes
15	44129101P	Accessory Box Harness Assembly	

N/A = Part no longer available

© Copyright, Alliance Laundry Systems LLC – DO NOT COPY or TRANSMIT

Contactor Box Assembly (Drawing 21 of 21)

Electric Models

380 Volt/50 Hertz/3 Phase; 415 Volt/50 Hertz/3 Phase; 480 Volt/60 Hertz/3 Phase

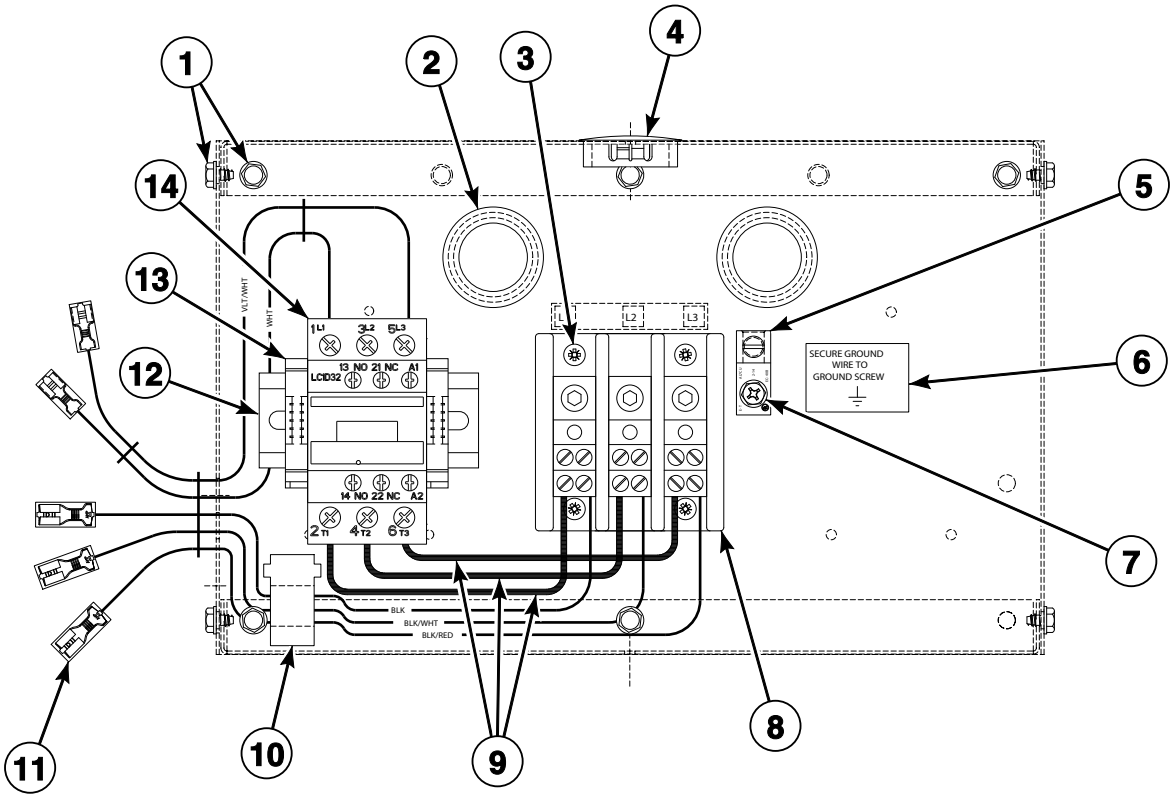

TMB2634P_70409101

© Copyright, Alliance Laundry Systems LLC – DO NOT COPY or TRANSMIT

Contactor Box Assembly (Drawing 21 of 21)

REF	PART NO.	DESCRIPTION	COMMENTS
	M413856	Electric Accessory Box Cover	
	44324001	Warning Label	Extended tumble; On electric accessory box cover
	M4945P3	Electric Heater Contactor Kit	Use to replace contactor on models through 7/10/07
1	51780	Screw	13 required
2	M402542	Snap Bushing	1 3/8 inches; 2 required
3	39733	Screw	4 required
4	N/A	Hole Plug	1 3/8 inches
5	M411283	Ground Lug Connector	
6	M403047	Secure Ground Label	Electrical
7	M402917	Screw	Ground
8	M413865	Power Distribution Block	3 pole
9	M413933	Jumper Cable Assembly	3 required
10	M413930P	Ferrite Core Assembly	3O, 3V, 3X, DO, DV, DX, OM, R3, RD and RM control suffixes
11	44129101P	Accessory Box Harness Assembly	
12	44137901	Din Rail	Models starting 7/10/07
13	M412615	End Stop	Models starting 7/10/07
14	70343301P	Contactor	Models starting 7/10/07

N/A = Part no longer available

© Copyright, Alliance Laundry Systems LLC – DO NOT COPY or TRANSMIT

Notes

© Copyright, Alliance Laundry Systems LLC – DO NOT COPY or TRANSMIT

Parts Index

A

Access Panel Trim
70399402 65

Accessory Box Harness Assembly
44129001 171
44129101P 173, 175

Actuator Switch
M412423 113

Adjustable Buzzer
D505447 31

Air Filter
44104201 121

Airflow Switch
M400944 ..... 113, 119

Airflow Switch Assembly
M401883 119

Airflow Switch Bracket
M409202 ..... 113, 119

Airflow Switch Guard
M410544 119

Airflow Switch Handy Box
M403235 ..... 113, 119

Airflow Switch Harness Assembly
M413689 119

Airflow Switch Insulator Barrier
M400712 ..... 113, 119

Airflow Switch Vane Lever
M400753 ..... 113, 119

Anti-Torque Ring
M400605 107

B

Baffle
44004901 77
44005201 77
44065501 77

Baffle Gasket
70015701 77

Ball Bearing
M401375P 97
M413921P 85
M413922P 85
44041901P 85

Bearing
F100136P 85

Bearing Retainer
M401370 97

Belt
M401182P 95
M412090 93
M412981 93

Belt Guard
M413008 103
M413541 91

Belt Guard Assembly
44132401 95
44132402 93

Bolt
M400650 85
M401393 ..... 93, 103
M405503 127
M412119 99

Bottom Pan
44000601P 77

Bracket
44065901 17

Bumper
M400795 125

Burner Assembly
M410541P 107, 109

Burner Orifice
70684100 111
70684106 111
70684107 111
70684109 111
70684110 111
70684112 111
70684129 111
70684132 111
70684134 111
70684136 111

Bushing
M411537 ..... 135, 137, 139, 141
M412086P 93
M412885P 93
M412917P 93

Bypass Harness Assembly
M413168 ..... 15, 131, 141

C

Cabinet Limit Harness Assembly
M412670 75
M413693P 75

Cable Screw Clamp
M404550 77

Calibration Jumper
70084104P 19, 25

Cam Package
M409532 19

Card Reader and Bracket Assembly
D510068P 39, 49

Card Reader Harness Assembly
70211801 49

Card Reader Network Harness Assembly
70206601 49

Card Reader Overlay
70334201 41
70334301 41

Circuit Board Support
D501523 17
34896 ..... 19, 25
70178801 19

Circuit Breaker
M412407P 159, 161, 163, 165, 167, 169
M412408P 159, 163, 167

Clean Lint Compartment Sticker
70114001 73

N/A items do not appear in index.

© Copyright, Alliance Laundry Systems LLC – DO NOT COPY or TRANSMIT

Clip
M400974 121
M400976 ..... 113, 119
Coil Spring
M402455 21
Coin Carrier Spring
M405138A 21
Coin Chute Assembly
70296401 77
Coin Cover Overlay
70246301 37
Coin Drop
38963P 43
70256402P 43
70429001 43
70441601P 43
Coin Drop Assembly
210195 43
210196 43
38462P 43
38463 43
38464P 43
38467 43
38472 43
38475 43
38519 43
38521 43
39157 43
44039701P 43
44039702 43
44039703 43
44039704 43
44039705 43
44039706 43
44039707 43
70281102 43
70283102 43
70441602 43
Coin Drop Kit
CK077 43
CK097 43
Coin Drop Switch
70286101P 43
Coin Identification Paper
38725 43
Coin Meter
M412546 21
70112501P 21
70112701P 21
70137301P 21
70137401P 21
70151301 21
70262401 21
Coin Meter Drive
M400754 21
Coin Retainer Spring
M406297 21
Coin Vault Assembly
70180101 77
Coin Vault Switch Harness
44023001 ..... 55, 57
Coin Vault Trim
70117501 ..... 55, 57
70117502 ..... 55, 57
Communication Board
210095P 51
210097 51
Communication Cable
M414875P 47, 49
Communication Connector
210099 51
Contact Base
F8538101 53
Contact Block
44018701 53
44018901 53
Contact Block Switch
F200233401P 53
Contact Switch
F8069501 53
Contactor
70323701P 143, 145, 147, 149, 151, 153, 155, 157, 159, 161, 163, 165, 167, 169
70343301P 159, 161, 163, 165, 167, 169, 171, 173, 175
Contactor Box Bottom
M412267 ..... 159, 161, 163, 165, 167, 169
Contactor Box Cover
M412265 ..... 159, 161, 163, 165, 167, 169
M413760 ..... 135, 137, 139, 141
Contactor Box End
M413757 ..... 135, 137, 139, 141
M413758 ..... 135, 137, 139, 141
Contactor Box Harness Assembly
M413684P 131, 141
Contactor Box Side
M412266 ..... 163, 165, 167, 169
Contactor Box Wrapper
44028401 ..... 135, 137, 139, 141
Control
44063801P 17
Control Assembly
D511867P 37, 39
D512202P 29
D513139P 23
44013601P 35
70462305P 33
70462306P 33
70462365P 33
Control Board
254/00070/00P 33
Control Box Base
44065301 17
Control Box Cover
44065201 17
Control Box Harness
44005801 129
44005901 129
44006001 131
44045601 15
Control Box Harness Assembly
M413678P 15
M413679 15
M413680 15
M413683P 129, 137
M413824 15
M413993 15
Control Box Housing
44065101 17
Control Box Top
44065401 17

N/A items do not appear in index.

© Copyright, Alliance Laundry Systems LLC – DO NOT COPY or TRANSMIT

Control Chassis Mounting Bracket
70357901 ..... 23, 29
Control Conversion Kit
M4797P3 31
M4799P3 25
Control Door Assembly
70363401 23
Control Door Latch
431318 77
Control Harness
44076901P 17
44100001P 29
44100101P 29
Control Kit
D505905P 47, 49
70228401P 35
Control Panel
44000117BP 59
44000118P 59, 61
44000119* 59
44000121WP 59, 61
44040002 ..... 59, 61
44040003* 59, 61
44040004 ..... 59, 61
44040005* 59
44040013 59
44040015W 59, 61
Control Panel Harness
44005501P 19
44005601P 25
44005701P 25
44006601 19
44006701 25
44006801 25
44010801P 37, 39, 47, 49
44010901 ..... 37, 39, 47, 49
44016701P 35
44016702 35
44017001 35
44017002 35
44025601 25
44025701 25
44025801 19
44042601 31
44043201P 31
44051401 33
44052601 33
44098601 33
44099901P 23
44100201P 23
44100301P 29
Control Panel Harness Assembly
44040301 31
Control Plate Assembly
44040901 31
44041001 31
70175803 25
70175804 19
70175805 35
70175807 47
70360601 29
70497201 ..... 39, 41, 49
Control Plate Kit
44050701P 33
70291001P 37, 39, 47
Control Trim
44016401 ..... 55, 57
70529402 ..... 55, 57
Counterweight
M400822 ..... 113, 119
Cover Plate
M401362 103
Cylinder
M400439P 83
M400440P 83
Cylinder and Trunnion Assembly
44037101 87
44037201 87
44057401P 87
44057402P 87
44057403 87
44057404 87
44068901P 87
44069001 87
44089101 87
44131001 87
44131002 87
44131102 87
Cylinder Assembly
44089001 83
44130802 83
Cylinder Kit
44057001P 83
44057101P 83
Cylinder Motor Harness
M412745 91
Cylinder Motor Harness Assembly
M412573 91
M413687 91
M413688 91
Cylinder, Trunnion and Bearing Housing Kit
M4819P3 87
M4820P3 87
M4821P3 87

D

Din Rail
M412692 ..... 159, 161, 163, 165, 167, 169
M412693 ..... 159, 163, 167
44137901 ..... 171, 173, 175
DIN Valve Adapter Kit
F8382301 121
Display Assembly
D512218P 29
Door Assembly
44028902P 81
44046701 79
44058001P 79
44058102P 81
44086801P 81
44112101 81
70176503 79
70212200 79
70212300 79
70407401P 81
70408901P 79
Door Glass
M400784P 79
44008401P 81
44008402P 81
70133601P 79

N/A items do not appear in index.

© Copyright, Alliance Laundry Systems LLC – DO NOT COPY or TRANSMIT

Door Glass Installation Tool
M4221P4 ..... 79, 81
Door Glass Seal Kit
70211901P 79
Door Handle
M400133 79
430117 79
44007901 81
44007902P 79
44057701 79
44057702 81
Door Hinge
70115902 79
70115903B 79
70115903W 79
Door Hinge Assembly
44075203* 81
44075204 81
44075208B 81
Door Hinge Cam Assembly
44035102 81
70436202 ..... 79, 81
Door Hinge Lug Assembly
44035001 ..... 55, 57, 79, 81
44035002 ..... 79, 81
Door Latch
M401223 ..... 55, 57
Door Ring
44007703B 81
70505707B 79
Door Ring and Handle Assembly
44043501 79
44112001 81
Door Ring Assembly
70505703 79
70543901 79
Door Ring Gasket
44008201P 81
70296801 79
Door Seal Kit
70211902P 81
Door Switch
44018201 55
Door Switch Actuator Kit
70215001P 81
Door Switch Cover
44001301 55
Door Switch Wire Channel
44001801 55
Double V Sheave
M412916 93
Drive Rivet
M400713 17
Drum Idler Wheel Assembly
430619 ..... 99, 101

E

Earth Terminal Sticker
M412096 ..... 143, 145, 147, 149, 151, 153, 155, 157, 159, 161, 163, 165, 167, 169
Electric Accessory Box Cover
M413856 ..... 135, 137, 139, 141, 171, 173, 175
Electric Box Cover
J1075621 113
Electric Heater Cabinet Assembly
M414825 ..... 115, 117
Electric Heater Contactor Kit
M4919P3 ..... 171, 173
M4945P3 175
Electronic Coin Drop Assembly
70294103P 43
70294104 43
70294107 43
70294111 43
70513306 43
70513311 43
Electronic Coin Drop Harness
44065801 43
Electronic Coin Drop Kit
CK099 ..... 43, 45
CK100 45
CK101 45
CK103 45
CK109 45
CK113 45
CK115 45
CK116 45
CK117 45
CK118 45
CK125 45
CK502 45
Electronic Control
44037801P 31
Emergency Stop Button Kit
F200233700P 53
Emergency Stop Label
44012901 53
Emergency Stop Pushbutton
F200233500 53
Emergency Stop Switch Harness Assembly
70083901 ..... 53, 65, 67
End Barrier
M412633 ..... 143, 145, 147, 149, 151, 153, 155, 157, 159, 161, 163, 165, 167, 169
End Section
M412540 ..... 143, 145, 147, 149, 151, 159, 163, 167
End Stop
M412615 ..... 153, 155, 157, 161, 165, 169, 171, 173, 175
70121001 ..... 143, 145, 147, 149, 151, 153, 155, 157, 159, 161, 163, 165, 167, 169
Exhaust Thimble Assembly
M412288 125
Expansion Clip
70030501 ..... 55, 57
Extension Handle
M412370 ..... 143, 145, 147, 149, 151, 153, 155, 157
M412371P 159, 161, 163, 165, 167, 169
Extension Spring
M412120 95

F

Fan Contactor
M413614P 135, 137, 139, 141

N/A items do not appear in index.

© Copyright, Alliance Laundry Systems LLC – DO NOT COPY or TRANSMIT

Fan Kit
M4936P3 103
Fan Motor
44045901P 105
44046001P 105
Fan Motor Harness
44006101P 103
44006201P 103
Fan Motor Harness Assembly
M413281 103
M413686 103
Felt Pad
M402144 83
Ferrite Core Assembly
M413930P ..... 35, 135, 137, 139, 141, 163, 165, 167, 169, ... 171, 173, 175
Fill Hose
F200116 17
Filter
44172001 121
Finger Guard
M412366 ..... 143, 145, 147, 149, 151, 153, 155, 157
M412367 ..... 159, 161, 163, 165, 167, 169
Front Panel
44052521 67
Front Panel Assembly
44077801*P 63
44077802P 63
44077805*P 63
44077806P 63
44077811*P 63
44077812 63
44077901*P 67
44077903*P 67
44077904P 67
44077905*P 67
44077906P 67
44077907*P 67
44077908P 67
44077909* 63
44077910 63
44077911* 63
44077912 63
44077913*P 63
44077914 63
44077915*P 63
44077916 63
Front Panel Harness
44006901 65
44007001P 65
Front Panel Harness Assembly
44047801 65
44047901 65
44063101P 65, 67
44063201P 53, 65, 67
Front Pillar
44001201 71
Fuse
D502592 ..... 143, 145, 147
M413118 ..... 135, 139
M413889 ..... 145, 149, 151
M414232 15
44310001 ..... 137, 141
70406501 35
Fuse Holder
M413544P 137, 141
Fuse Holder Bracket
M413575 ..... 135, 139
M413576 ..... 137, 141
Fuse Holder Kit
D502591P 143, 145, 147, 149, 151, 163, 165, 167, 169
Fuse Receptacle
91024P 15, 135, 139
Fuse Sticker
M413816 ..... 135, 139
M413817 ..... 137, 141

G

Gas Relay Harness
44010701 ..... 147, 149
Gas Shut-Off Valve
M412562P 107
Gas Valve
M410907P 107
M410908 107
M413332P 107
44154501P 107, 109
44154502P 109
Gas Valve Bracket
M406814 107
44040401 109
Gas Valve Coil
44042901P 107
Gas Valve Harness Assembly
M413650 107
Gas Valve Kit
44138701P 107
Graphic Overlay
44050501 33
44050502 33
44240501 33
Ground Buss Assembly
M412656 ..... 143, 145, 147, 149, 151, 153, 155, 157, 159, 161, 163, 165, 167, 169
Ground Lug Connector
M411283 ..... 171, 173, 175
Guide Rail
M412476 ..... 93, 95, 101

H

Handle and Caps Assembly
70154405P 73
70154406 73
Handle Bar
70399501B 81
70399502B 79
Handle Bumper
70407202 73
Harness Assembly
M412635 113
M412997 ..... 107, 109
M413690 113
Heater Cable Assembly
M413959 115
M413960 115

N/A items do not appear in index.

© Copyright, Alliance Laundry Systems LLC – DO NOT COPY or TRANSMIT

Heater Cable Harness Assembly
M412801 117
M412802 117
Heater Element
M410939P 115, 117
M410940P 115
M410941P 115, 117
M412955P 115
High Temperature Lead
44061603 15
44061604 15
High Voltage Suppression Cable
44239703 15
Hinge Cam Kit
M4772P3 ..... 79, 81
Hose
44073301 17
Hose Clamp
36801 17
Hose Fitting
44069101 17
Housing and Trunnion Assembly
M4642P3 89
M4643P3 89
M4644P3 89
M4645P3 89

I

ICM Return Lead
M411061 15
Idler Arm
44102701 101
Idler Arm Kit
M414320P 99, 101
Idler Housing
M412612 97
Idler Housing Kit
917P3 97
943P3P 99, 101
Idler Shaft
M412223P 99
M414241 97
Idler/Belt Assembly Kit
942P3P 101
Ignition Control Kit
M4954P3 15
M4955P3 15
M4956P3 15
M4982P3 15
44264601 15
44264701 15
Indicator Light
70082201 ..... 19, 27
Insulation
M414503 ..... 107, 109
44020601 ..... 59, 61
Insulator
M413862 ..... 135, 137, 139, 141

J

Jumper Bar
M400866 ..... 115, 117
Jumper Cable Assembly
M413933 ..... 171, 173, 175
M413934 ..... 133, 159, 161, 165, 167, 169, 171
M414121 ..... 161, 165, 169
Jumper Cable Wire
M412740 ..... 133, 159, 167
Jumper Calibration Wire
70324604 ..... 23, 29
Jumper Configuration Assembly
M413507 ..... 129, 131, 133, 145, 149
M413510 ..... 137, 141
Jumper Harness
44129201P 171, 173
Jumper Harness Assembly
M412871 ..... 133, 159
M413506 ..... 129, 131, 133, 145, 149, 151, 167
M413508 ..... 137, 141, 157, 165
M413509 ..... 137, 141, 165
M414078 133
Jumper Set Assembly
44042701 31
44042801 31
Jumper Strip
M400869 ..... 115, 117
Jumper Wire
M414077 157
44014501 ..... 133, 159, 161, 165, 167, 169
44014601 ..... 133, 159, 167
44014701 ..... 133, 159, 167
44014801 ..... 161, 165, 169
Jumper Wire Assembly
M412287 ..... 115, 117
M412645 ..... 19, 23, 27, 29, 35, 37, 39, 47, 49
Junction Box Cover
M412650 ..... 143, 145, 147, 149, 151, 153, 155, 157
Junction Box Side
M412649 ..... 143, 145, 147, 149, 151

K

Key
M400008 ..... 85, 95
M400993 ..... 97, 103
M401327 ..... 95, 97, 99, 101
M405232 85
44132301 103
70155601 ..... 17, 55, 57
70155602 ..... 55, 57
Key and Instruction Kit
M400994P 103
Kickplate
70117607 73
70117608 73
Knob
M400773 27
M410927 27
44020501 ..... 19, 27
44020502 ..... 19, 27

N/A items do not appear in index.

© Copyright, Alliance Laundry Systems LLC – DO NOT COPY or TRANSMIT

L

Label
70537101 ..... 65, 67

Latch Mounting Bracket
44003201 77

Lever Arm Switch
44011601 69

Light
801431 23
801432 17

Lighted Switch Bracket
44005101 15

Limit Thermostat
M409433 ..... 113, 115
M410220 ..... 115, 117
M410542 75
M411813 75

Lint Panel
44000001*P 73
44000002P 73

Lint Panel Harness Assembly
44048101P 71

Lint Panel Switch Bracket
44011501 69
44118601 71

Lint Screen
44063601 77

Loading Spring
M400401 97

Lock, Key and Nut Kit
70722301 ..... 55, 57
70733701 ..... 17, 55, 57

Low Pressure Steam Cover
M400828 121

L.P. Conversion Kit
M4379P3 ..... 107, 109
M4542P3 107

L.P. Gas Valve Kit
M4897P3 107

M

Main Harness
44006301P 15
44006401P 15
44098701 15

Male Tab Terminal
00177 ..... 19, 23, 27, 29, 31

Manifold Pipe
44040501 ..... 107, 109

Manifold Pipe Assembly
M406681 107
M413395 107

Manual Reset Thermostat
M411938 113
M411941 75

Membrane Switch
M414368P 35
44037901P 31
44039402P 31

Micro V Belt
M411425P 95

Micro V Pulley
M411466P 99, 101

Micro V Sheave
M412156 95

Mixing Valve
36958P 17

Motor
M412519 91
44045701P 105
44045801P 105
44046101P 105
44048701P 105

Motor Bracket
M411483 ..... 93, 95, 103
44117201 ..... 93, 95, 103

Motor Hardware Kit
M4426P3 103

Motor Kit
M412520P 91

Motor Mount Assembly
M413617 91

Motor Switch
M414563 91

Mounting Bracket
70080701 ..... 19, 25

Mounting Plate
70208801 ..... 39, 41, 49

Mounting Switch Base
M412186 ..... 159, 161, 163, 165, 167, 169
M412187P 143, 145, 147, 149, 151, 153, 155, 157

N

Nameplate
39564 37
44010401 ..... 59, 61
44010601 ..... 59, 61
44035801 61
44046801 ..... 59, 61
44062901 59
70243901 59

Nameplate Bezel
70117401 59

Nameplate Overlay
M412963 ..... 59, 61
44104501 59
44130301 ..... 59, 61
70128901 59
70410201 ..... 59, 61

Network Board
210157P 51

Network Board Assembly
210016P 51

Network Cable
210165 51

Network Capacitor Assembly
M413863 ..... 135, 137, 139, 141, 145, 149, 157, 163, 165

Network Capacitor Harness Assembly
M413878 ..... 135, 137, 139, 141

Network Wire Harness Assembly
800217 ..... 47, 49

N/A items do not appear in index.

© Copyright, Alliance Laundry Systems LLC – DO NOT COPY or TRANSMIT

Nut
H88412101 ..... 93, 95, 101
M400022 103
M400026 ..... 85, 93, 95
M400033 95
M400034 103
M400977 ..... 55, 57, 59, 113, 119
M400979 ..... 69, 113, 119
M401548 ..... 107, 109
M401930 83
M404993 83
M412688 ..... 143, 147, 149, 151, 153, 155, 157, 159, 161, 167, 169
M414215 ..... 79, 81
02428 ..... 91, 93, 103
02788 55
20274 ..... 91, 93, 103, 127
21899 77
23951 ..... 73, 79, 81
24205 ..... 23, 29
29786 ..... 23, 33, 37, 47, 55, 79
29787 ..... 31, 33
44071201 ..... 79, 81
44087201 101
51236 73
52566 99
56156 ..... 99, 101
70030401 77
70054 ..... 19, 23, 25, 29, 31, 35, 39, 41, 49, 115, 117
70142 91

O

Opto Coupler
200674P 43
Overlay
259/00005/00 33
44130001 35
44130002 35
70113501 19
70114301 19
70114501 27
70114502 27
70115801 35
70128401 35
70128601 35
70128701 35
70129202 27
70129501 ..... 37, 47
70129601 37
70130301 35
70130401 35
70130501 35
70130601 35
70130701 35
70131001 19
70134801 19
70134901 27
70135301 35
70183501 19
70184301 47
70184302 47
70184401 49
70239601 47
70239602 47
70245901 27
70246001 27
70246101 27
70257701 37
70257702 37
70257703 ..... 39, 41
70258001 37
70258002 37
70258003 ..... 39, 41
70259001 ..... 37, 39
70261001 37
70261002 37
70261003 39
70261201 37
70261202 37
70266701 39
70266801 39
70275401 37
70286701 37
70304401 41
70321001 37
70362201 29
70362202 29
70362501 29
70362502 29
70362901 23
70363001 23
70411701 37
70411702 37
70411703 39

P

Panel Locator
56079 ..... 55, 57, 73
PC Board Standoff
210098 51
Pipe
M400749 ..... 107, 109
Plug
M400985 ..... 135, 137, 139, 141
Pop Rivet
M400003 ..... 55, 57, 77
70058501 ..... 77, 81
70126301 ..... 73, 79, 81
70126401 73
Porcelain Touch-Up Paint
122P4P 77
215P4P 77
370P4P 77
Power Distribution Block
M413865 ..... 159, 161, 163, 165, 169, 171, 173, 175
Power Distribution Block Cover
44014901P 159, 161, 163, 165, 167, 169
Proximity Bracket
44044501 123
Pulley
M412884 93
M414564 103
M414565 91
M414566 103
M414567 91
Pushbutton
44018801 53
Pushbutton Switch
M413431 15
70413301 ..... 37, 39, 41, 47, 49, 57, 71

N/A items do not appear in index.

© Copyright, Alliance Laundry Systems LLC – DO NOT COPY or TRANSMIT

Push-to-Start Switch
801434W ... 17

R

Rear Panel Assembly
M414746 ... 127
Relay
D502501P ... 139
M412534 ... 27, 35, 143, 145, 147, 149, 151, 153, 159, 161
Relay Harness Assembly
M412636 ... 143, 145
M412766 ... 161
M412776P ... 159
M412777 ... 159
M414032 ... 145, 149, 151, 153, 157
M414149 ... 159
M414150 ... 161, 165, 169
M414224 ... 145, 149, 151, 153
Relay/Buzzer Bracket
44041701 ... 31
Resilient Ring Kit
M4525P3P ... 103
Return Spring
M405138B ... 21
Reversing Contactor
M412405P ... 145, 153, 155, 157, 159, 161, 163, 165, 167, 169
M413615P ... 139, 141
Reversing Contactor Harness Assembly
M414034 ... 133, 145, 153, 157, 165, 167, 169
Reversing Contactor Jumper Assembly
M413624 ... 131, 141
M413695 ... 131
Reversing Jumper Harness Assembly
M412927 ... 145
M412928 ... 133, 153, 155, 157, 159, 161, 165, 167, 169
M412929 ... 133, 153, 155, 157, 159, 161, 165, 167, 169
Reversing Timer
M412081 ... 139, 141
Reversing Timer Harness
44008001 ... 131, 141
Rib Rod
M401411 ... 83
Ring
M400399 ... 95, 101
Rocker Switch
M413270 ... 27
44099601 ... 29
70455101 ... 23, 29
70461301 ... 29
Roller Bracket Assembly
70404001 ... 73
Roller Catch Arm
70030301 ... 73
Roller Catch Spacer
70030201 ... 73
Roller Catch Wheel
70297601 ... 73
Rotary Drop Shroud
70061701 ... 19
Rotation Sensor Assembly
70417401P ... 123
Rotation Sensor Kit
7009P ... 123

S

Screw
D501086 ... 137, 141, 143, 147, 151, 159, 161
D501524 ... 23, 29, 37, 39, 41, 47, 49
F430116 ... 93, 95, 101
M400044 ... 79, 81, 135, 137, 139, 141, 149, 157, 165
M400056 ... 91, 101
M400057 ... 91, 93, 103
M400061 ... 93, 95
M400063 ... 85
M400065 ... 95, 101
M400071 ... 149, 153
M400072 ... 113, 119
M400077 ... 99, 101, 103
M400661 ... 79, 81
M400664 ... 75, 113, 119
M401938 ... 69, 113, 119
M402574 ... 55
M402585 ... 79
M402797 ... 27, 75, 113
M402917 ... 135, 137, 139, 141, 171, 173, 175
M405188 ... 121, 125
M405824 ... 135, 137, 139, 141
M409385 ... 79
M410059 ... 103
M411052 ... 27
M411072 ... 55, 57, 125
M411143 ... 15
M412105 ... 139, 141
M412627 ... 93, 95, 101
M413565 ... 91
22688 ... 91
33562 ... 115, 117, 121, 143, 147, 151, 153, 155, 159, 161, 167, 169
39733 ... 159, 161, 167, 169, 171, 173, 175
430497 ... 15, 17, 19, 27, 71, 75, 77, 103, 107, 109, 113, 115, 117, 119, 121, 143, 145, 147, 149, 151, 163, 165, 167, 169
430648 ... 99, 101
430756 ... 79
430757 ... 73
431287 ... 55, 77
44023301 ... 55, 79
51778 ... 135, 137, 139, 141
51780 ... 15, 17, 119, 135, 137, 139, 141, 143, 145, 147, 149, 151, 153, 155, 157, 159, 161, 167, 169, 171, 173, 175
51782 ... 69
61199 ... 79, 81
70033502 ... 55, 57, 81
70033504 ... 55, 79
70069901 ... 15, 19, 23, 25, 29, 35
70072801 ... 73
70132301 ... 73
70182601 ... 55, 57
70187201 ... 85, 97
70240301 ... 107, 109, 115, 117
70247701 ... 77
70275801 ... 55, 57
70409801 ... 79, 81
70442101 ... 79, 81

N/A items do not appear in index.

© Copyright, Alliance Laundry Systems LLC – DO NOT COPY or TRANSMIT

Secure Ground Label
M403047 ..... 135, 137, 139, 141, 171, 173, 175
Sensor Harness Assembly
44068701 17
Shadow Box Clip
M400972 ..... 55, 57
Sheave Kit
44086901P 95, 101
Shut-Off Valve Kit
M4983P3 ..... 107, 109
Side Panel
44004702* 77
44004802* 77
44056701* 77
Side Panel and Bracket Assembly
44056801* 77
Single V Sheave
M412931 93
Sleeve
44050601 33
Slot Card Plate Assembly
44089501 41
Snap Bushing
M400770 ..... 71, 75, 135, 137, 139, 141
M402542 ..... 171, 173, 175
M411826 71
70178701 17
Solenoid Valve DIN Connector
70370301P 121
Spacer
M401402 83
44024001 93
Spark Electrode
44328701P 107, 109
Spark Igniter
M410905P 107
Spray Paint
286P4 77
297P4 77
298P4P 77
381P4 77
382P4 77
Spud Holder Assembly
M410546 ..... 107, 109
Start Switch
70108501 ..... 19, 27
Steam Coil
M400637P 121
Steam Heater Assembly
44020401P 121
Steam Pressure Label
902303 121
Steam Solenoid
70351011P 121
70351012 121
Steam Stand Box
44007501 121
Steam Valve
F8322902 121
F8322903 121
Steam Valve Coil
M412258 121
70205701P 121
Stove Assembly
M414795 ..... 107, 109
Stove Limit Harness Assembly
M412609 113
Support Bearing
70448701 99
Switch
M400947 21
Switch Hole Plug
44057801B 57
44057801Q 57
44057801W 57
Switch Plate
M413236 ..... 27, 29

T

Tailpiece
44092201 ..... 107, 109
44092202 ..... 107, 109
Temperature Control Bracket
44018601 ..... 19, 27, 35
Temperature Kit
70475001P 19, 25
Temperature Knob
44020503 ..... 19, 27
44104601 ..... 23, 29
Temperature Selector Bracket
70350201 23
Temperature Selector Switch
D511711 ..... 23, 29
Temperature Selector Switch Bracket
70391701 29
Temperature Sensor Assembly
B12308601 75
Tension Plate Assembly
M414405 ..... 93, 95, 101
Terminal Block
M405364 ..... 135, 137, 139, 141
M412537 ..... 143, 145, 147, 149, 151, 159, 163, 167
M412538 ..... 153, 155, 157, 161, 165, 169
M412631 ..... 143, 145, 147, 149, 151, 153, 155, 157, 159, 161, 163, 165, 167, 169
M412632 ..... 143, 145, 147, 149, 151, 153, 155, 157, 159, 161, 163, 165, 167, 169
M413865 167
430642 ..... 135, 137, 139, 141
Terminal Strip
M413542 ..... 135, 137, 139, 141
Thermistor
M414704 75
44064701 17
Thermistor Bracket Assembly
44051201 75
Thermistor Cable
44319901P 75
Thermodisc Bracket
M400838 75
Thermostat Bracket
M402798 113
Thermostat Cover
M414477 ..... 75, 113

N/A items do not appear in index.

© Copyright, Alliance Laundry Systems LLC – DO NOT COPY or TRANSMIT

Thermostat Module
431347P 19, 25
Thimble Vane Assembly
M400503 125
Timer
M412079P 27
70131701P 25
70131801P 27
Timer Control Assembly
70175301P 19
Timer Knob
70082101 27
Timer Motor
70218201 21
70218301 21
Timing Cam
M400732P 21
M400733P 21
M400734P 21
M400735P 21
M400736P 21
M400737P 21
M400738P 21
M400739P 21
M400740P 21
M400741P 21
Top Cover
M414759 ..... 77, 121
M414760 77
Top Cover Pan
M414719P 77
Transformer
M412412P 153, 155, 161, 169
M412477P 143, 145, 147, 151, 159, 167
M414228P 135, 139, 145, 149, 163
M414229P 137, 141, 157, 165
M414230P 135
M414312P 135
Transformer Harness
44043101 ..... 133, 145, 149, 157, 165
Transformer Harness Assembly
M412641 ..... 143, 145, 147, 151, 153, 155, 159, 161, 167, 169
M412642 ..... 143, 145, 147, 151, 159, 167
M414028 ..... 133, 157, 165
M414029 ..... 133, 145, 149, 157, 165
M414076 ..... 145, 149
Trunnion and Bearing Assembly
M4638P3 89
M4639P3 89
M4640P3 89
M4641P3 89
Trunnion Assembly
M413833P 83
M413834P 83
44036801P 83
44375001P 89
Trunnion Housing
M413826P 85
Tumbler Dolly Kit
M4379P4 ..... 55, 57

U

USB IR Interface Kit
203346 15

V

Valve Coil
F8514801 121
Valve Kit
F8521701 121
Valve Rebuild Kit
F8379502 121
Valve Replacement Kit
M4909P3 107
Vane
M400253 ..... 113, 119
Vane Assembly
M400541 ..... 113, 119

W

Warning Label
44324001 ..... 135, 137, 139, 141, 143, 145, 147, 149, 151, 153, 155, 157, 159, 161, 163, 165, 167, 169, 171, 173, 175
70534301 ..... 65, 67
Washer
M400013 ..... 83, 91, 93, 103
M400014 ..... 93, 95, 103, 127
M400015 ..... 83, 85
M400080 ..... 91, 93, 95, 101, 103, 127
M400991 103
M403958 ..... 91, 93, 95, 101
M405535 ..... 19, 99
M412188 ..... 93, 95, 101
02834 91
20103 85
430782 99
70261401 85
70265901 101
70270301 101
70409301 ..... 79, 81
Wire Guard
201595P 43

N/A items do not appear in index.

© Copyright, Alliance Laundry Systems LLC – DO NOT COPY or TRANSMIT

Notes

© Copyright, Alliance Laundry Systems LLC – DO NOT COPY or TRANSMIT