Drying Tumblers

50 Pound Capacity

15 Digit Model Numbers with 2 in 12th Position

Refer to Page 5 for Model Numbers

Parts

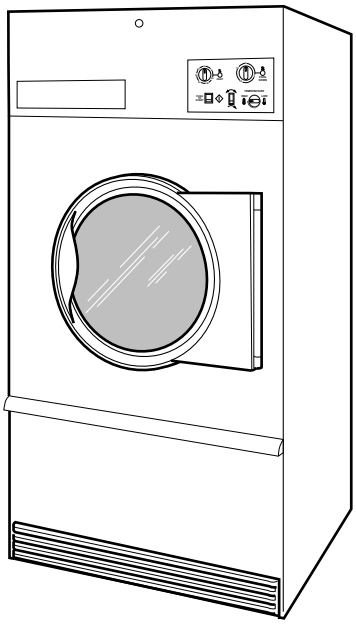

TMB795C_70421801

Alliance™ Laundry Systems

www.alliancelaundry.com

Part No. 70421801R34
March 2025

Table of Contents

Title	Page
Parts Ordering Information	3
Serial Plate Location	3
Model Identification	5
Product Overview - Heat Source and Voltage	6
Product Overview - Control Suffixes (Drawing 1 of 3)	8
Product Overview - Control Suffixes (Drawing 2 of 3)	10
Product Overview - Control Suffixes (Drawing 3 of 3)	12
Control Box	14
Fire Suppression System Control Box	16
Single Drop Controls	18
Dual Digital Timer Controls	20
DMP Control	22
DX4 Electronic Control	24
OPL Microprocessor Controls	26
Coin Drop Components for MDC Models	28
Coin Drop - Wire Harnesses for MDC Models	30
Central Pay and Card Reader MDC Models	32
Optional Card Reader Mountings for MDC Models	34
Coin Drops	36
Coin Drop Kits	38
Coin Drop Components for Quantum Control	40
Card Reader Components for Quantum Control	42
Network Board	44
Network Connection for Quantum	46
Coin Drop Components for Galaxy 600 Control	48
Card Reader Components for Galaxy 600 Control	50
UniLinc Control	52
LED OPL Control	54
Emergency Stop Button - CE Models	56
Cabinet Front Components	58
Cabinet Panels and Nameplates	60
Front Panel Assemblies	62
Lint Panel Switch Assembly	64
Lower Cabinet Front Components	66
Cabinet Limit and Thermistor Assembly	68
Cabinet Components	70
Door Components	72
Hinge Components	74
Cylinder and Trunnion Components	76
Bearing Components	78
Reversing Cylinder Drive Motor and Components	80

© Copyright 2025, Alliance Laundry Systems LLC

All rights reserved. No part of the contents of this book may be reproduced or transmitted in any form or by any means without the expressed written consent of the publisher.

Drive Components for Non-Moisture Sensing Reversing Models Through 1/31/12 82
Drive Components for Moisture Sensing Reversing Models Starting 8/1/11 and Non-Moisture Sensing Reversing Models Starting 2/1/12 84
Drive Components for Nonreversing Models Through 3/31/11 86
Drive Components for Nonreversing Models Starting 4/1/11 88
Idler Housing Assembly for Non-Moisture Sensing Reversing Models Through 1/31/12 90
Idler Assembly for Nonreversing Models Through 3/31/11 92
Moisture Sensing Components 94
Fan Components 96
Fan Motors 98
Gas Heater Components 100
Burner Orifices for Non-CE Models 102
Electric Heater Components 104
Airflow Switch Assembly 106
Steam Heater and Valve 108
Rotation Sensor 110
Duct and Damper Assembly 112
Rear Panel Assembly 114
Control Tray Wrap Components 116
Control Tray Fuses 118
Control Tray Harnesses for Gas and Steam Models 120
Control Tray Components for Gas Models 122
Control Tray Components for Steam Models 124
Control Tray Harnesses for Electric Models 126
Control Tray Components for Non-CE Electric Models 128
Control Tray Components for CE Electric Models 130
Parts Index 133

© Copyright, Alliance Laundry Systems LLC – DO NOT COPY or TRANSMIT

Parts Ordering Information

If literature or replacement parts are required, contact the source from whom the machine was purchased or contact Alliance Laundry Systems at (920) 748-3950 for the name and address of the nearest authorized parts distributor.

For technical assistance, call the number listed below:

(920) 748-3121 Ripon, Wisconsin

Serial Plate Location

When calling or writing about your product, be sure to mention model and serial numbers. Model and serial numbers are located on serial plate(s) as shown.

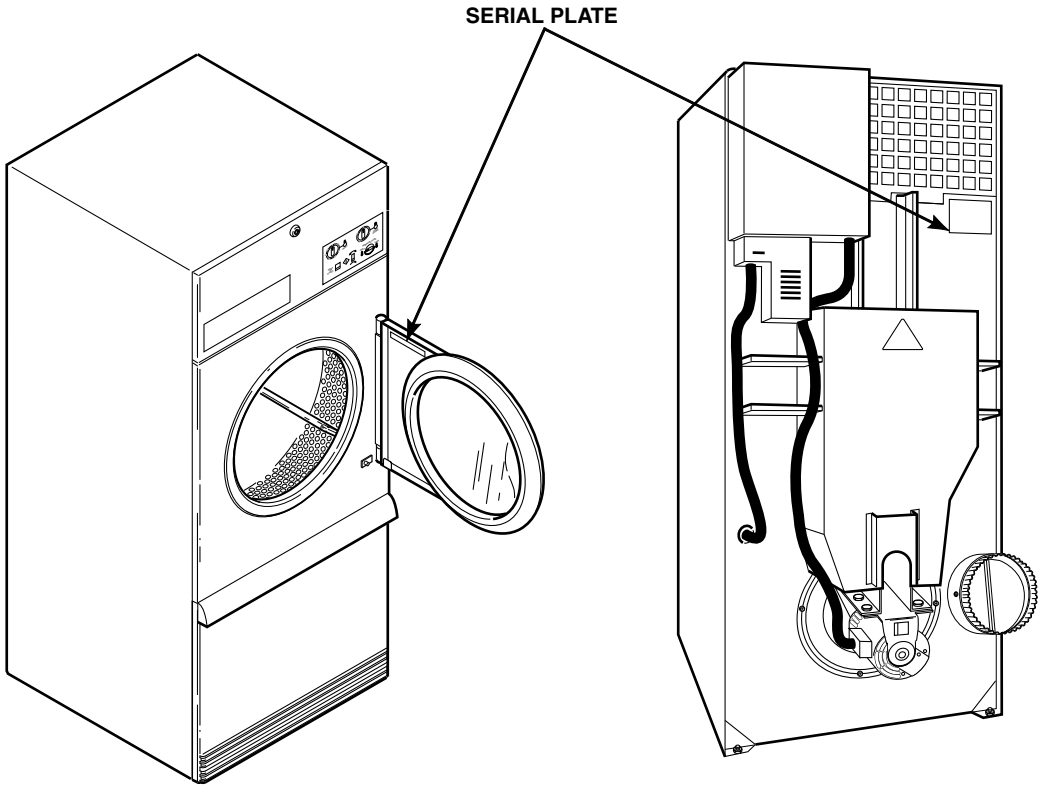

TMB2235N_70421801

© Copyright, Alliance Laundry Systems LLC – DO NOT COPY or TRANSMIT

Notes

© Copyright, Alliance Laundry Systems LLC – DO NOT COPY or TRANSMIT

Model Identification

Information in this manual is applicable to these tumbler models:

BA050L
BA050N
BH050E
BH050L
BH050N
BH050S
BK050N
BT050D
BT050E
BT050L
BT050N
BT050S
BT050T
BU050E
BU050L
BU050N
BU050S
BU050T
CA050L
CA050N
CK050N
CT050E
CT050L
CT050N
CT050S
CT050T
CU050E
CU050L
CU050N
CU050S
CU050T
GA050L
GA050N
GH050E
GH050L
GH050N
GH050S
GK050N
GT050E
GT050L
GT050N
GT050S
GT050T
GU050E
GU050L
GU050N
GU050S
GU050T
HA050L
HA050N
HH050E
HH050L
HH050N
HH050S
HK050N
HR050E
HR050S
HT050D
HT050E
HT050L
HT050N
HT050S
HT050T
HU050E
HU050L
HU050N
HU050S
HU050T
IT050E
IT050L
IT050N
IT050S
IT050T
KA050L
KA050N
KK050N
KT050E
KT050L
KT050N
KT050S
KT050T
KU050E
KU050L
KU050N
KU050S
KU050T
LA050L
LA050N
LK050N
LT050E
LT050L
LT050N
LT050S
LT050T
LU050E
LU050L
LU050N
LU050S
LU050T
MT050D
MT050E
MT050L
MT050N
MT050S
MT050T
NH050E
NH050L
NH050N
NH050S
NR050E
NR050S
NT050E
NT050L
NT050N
NT050S
NU050E
NU050L
NU050N
NU050S
PA050L
PA050N
PH050E
PH050L
PH050N
PH050S
PK050N
PR050E
PR050S
PT050E
PT050L
PT050N
PT050S
PT050T
PU050E
PU050L
PU050N
PU050S
PU050T
SA050L
SA050N
SH050E
SH050L
SH050N
SH050S
SK050N
SR050E
SR050S
ST050D
ST050E
ST050L
ST050N
ST050S
ST050T
SU050E
SU050L
SU050N
SU050S
SU050T
UA050L
UA050N
UH050E
UH050L
UH050N
UH050S
UK050N
UR050E
UR050S
UT050E
UT050L
UT050N
UT050S
UT050T
UU050E
UU050L
UU050N
UU050S
UU050T
YT050E
YT050L
YT050N
YT050S
YT050T
YU050E
YU050L
YU050N
YU050S
YU050T

© Copyright, Alliance Laundry Systems LLC – DO NOT COPY or TRANSMIT

Product Overview - Heat Source and Voltage

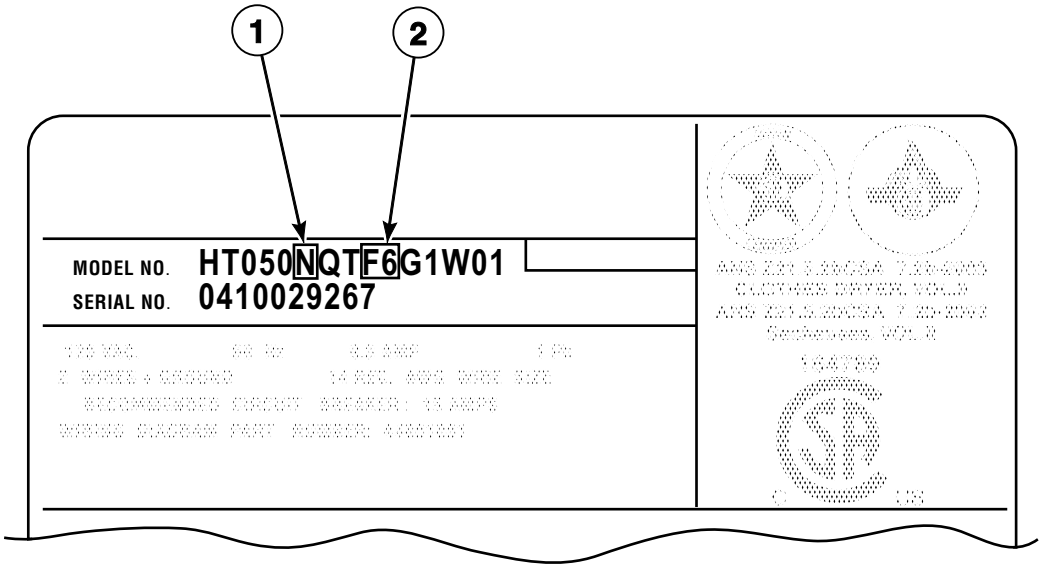

TMB2730P_70421801

© Copyright, Alliance Laundry Systems LLC – DO NOT COPY or TRANSMIT

Product Overview - Heat Source and Voltage

REF	PART NO.	DESCRIPTION	COMMENTS
1	-	Heat Source	D: Liquid Petroleum Gas (L.P.) E: Electric L: Liquid Petroleum Gas (L.P.) N: Natural Gas (N.G.) S: Steam T: Thermal Oil
2	-	Voltage	B1: 120 Volt/60 Hertz/1 Phase B2: 120 or 208-240 Volt/60 Hertz/1 Phase F3: 200-208 or 240 Volt/60 Hertz/1 Phase F4: 200 Volt/50 Hertz/3 Phase F5: 200-208 Volt/60 Hertz/3 Phase F6: 200-208 or 240 Volt/60 Hertz/3 Phase J1: 230 Volt/50 Hertz/1 Phase J2: 230-240 Volt/50 Hertz/1 Phase J3: 240 Volt/50 Hertz/1 Phase J5: 230 Volt/50 Hertz/3 Phase J6: 230-240 Volt/50 Hertz/3 Phase J7: 240 Volt/50 Hertz/3 Phase J8: 240 Volt/60 Hertz/3 Phase M1: 380 Volt/50 Hertz/3 Phase M2: 380 or 400-415 Volt/50 Hertz/3 Phase M3: 380 Volt/60 Hertz/3 Phase N1: 400-415 Volt/50 Hertz/3 Phase P1: 440 Volt/60 Hertz/3 Phase Q1: 460-480 Volt/60 Hertz/3 Phase Q2: 480 Volt/60 Hertz/3 Phase

© Copyright, Alliance Laundry Systems LLC – DO NOT COPY or TRANSMIT

Product Overview - Control Suffixes (Drawing 1 of 3)

All Models Except G and K Models

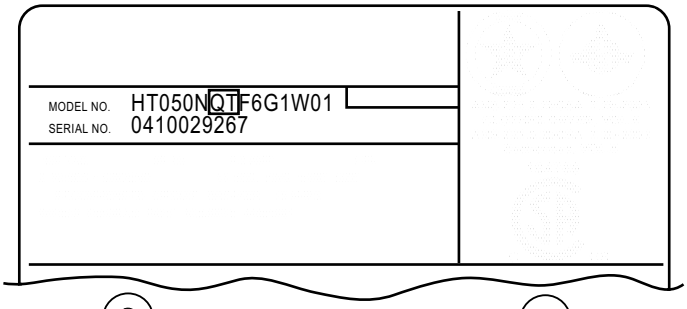

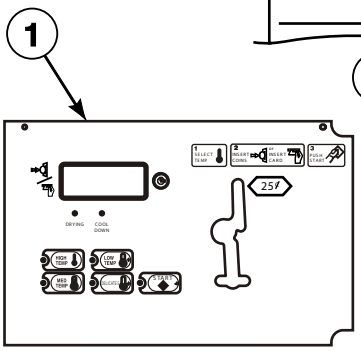

BB, BC, BW and BX Control Suffixes

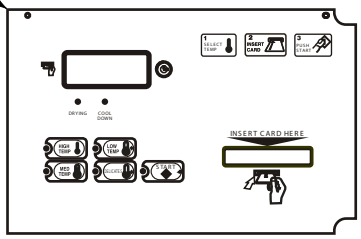

BG, BK, BL, BY and BZ Control Suffixes

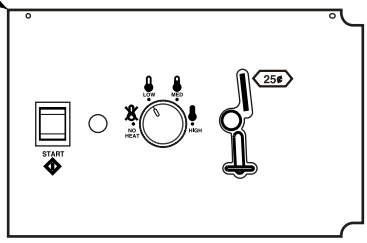

SD and SX Control Suffixes

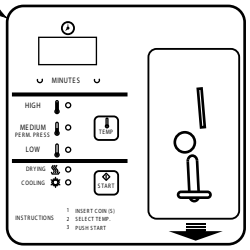

DV and DX Control Suffixes

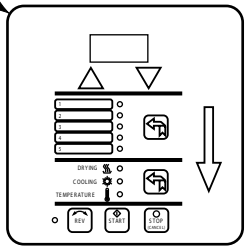

DO and RD Control Suffixes

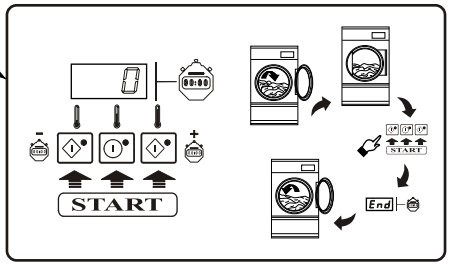

3B, 3K, 3L, 3O, 3V, 3W, 3X and R3 Control Suffixes

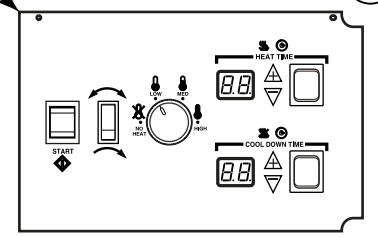

QT and RQ Control Suffixes

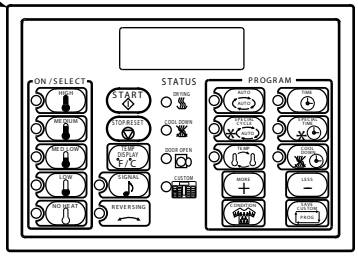

OM and RM Control Suffixes

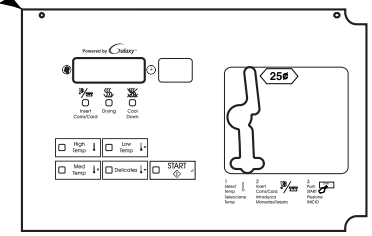

KB, KC, KK, KL, KW, KX, KY and KZ Control Suffixes

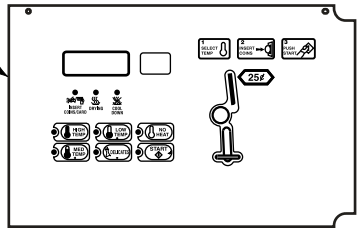

LB, LC, LW, LX, WB, WC, WW and WX Control Suffixes

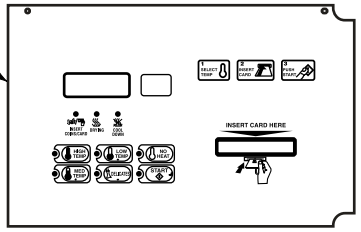

LK, LL, LY, LZ, WK, WL, WY and WZ Control Suffixes

TMB3285P_70421801

© Copyright, Alliance Laundry Systems LLC – DO NOT COPY or TRANSMIT

Product Overview - Control Suffixes (Drawing 1 of 3)

REF	PART NO.	DESCRIPTION	COMMENTS
1	-	Control - Nonreversing	BC: basic electronic, coin BX: basic electronic, prep for coin
	-	Control - Reversing	BB: reversing basic electronic, coin BW: reversing basic electronic, prep for coin
2	-	Control - Nonreversing	BG: basic electronic, OPL mode BL: basic electronic, prep for central pay BY: basic electronic, prep for card
	-	Control - Reversing	BK: reversing basic electronic, prep for central pay BZ: reversing basic electronic, prep for card
3	-	Control - Nonreversing	SD: single drop SX: single drop, prep for coin
4	-	Control - Nonreversing	DV: DMP vended DX: DMP prep for coin
5	-	Control - Nonreversing	DO: DMP OPL
	-	Control - Reversing	RD: reversing DMP OPL
6	-	Control - Nonreversing	3L: DX4 prep for central pay 3O: DX4 OPL 3V: DX4 vended 3X: DX4 prep for coin
	-	Control - Reversing	3B: reversing DX4 vended 3K: reversing DX4 prep for central pay 3W: reversing DX4 prep for coin R3: reversing DX4 OPL
7	-	Control - Nonreversing	QT: dual digital timer
	-	Control - Reversing	RQ: reversing dual digital timer
8	-	Control - Nonreversing	OM: OPL micro
	-	Control - Reversing	RM: reversing OPL micro
9	-	Control - Nonreversing	KC: single coin KL: prep for central pay KX: prep for coin KY: prep for card
	-	Control - Reversing	KB: reversing single coin KK: reversing prep for central pay KW: reversing prep for coin KZ: reversing prep for card
10	-	Control - Nonreversing	LC: network adaptable coin LX: network adaptable, prep for coin WC: network ready coin WX: network ready, prep for coin
	-	Control - Reversing	LB: reversing network adaptable coin LW: reversing network adaptable, prep for coin WB: reversing network ready coin WW: reversing network ready, prep for coin
11	-	Control - Nonreversing	LL: network adaptable, prep for central pay LY: network adaptable, prep for card WL: network ready, prep for central pay WY: network ready, prep for card
	-	Control - Reversing	LK: reversing network adaptable, prep for central pay LZ: reversing network adaptable, prep for card WK: reversing network ready, prep for central pay WZ: reversing network ready, prep for card

NOTE: Coin models have the following control suffixes: 3B, 3K, 3L, 3V, 3W, 3X, BB, BC, BK, BL, BW, BX, BY, BZ, DV, DX, KB, KC, KK, KL, KW, KX, KY, KZ, LB, LC, LK, LL, LW, LX, LY, LZ, SD, SX, WB, WC, WK, WL, WW, WX, WY and WZ.

NOTE: OPL models have the following control suffixes: 3O, BG, DO, OM, QT, R3, RD, RM and RQ.

© Copyright, Alliance Laundry Systems LLC – DO NOT COPY or TRANSMIT

Product Overview - Control Suffixes (Drawing 2 of 3)

All Models Except G, K and M Models

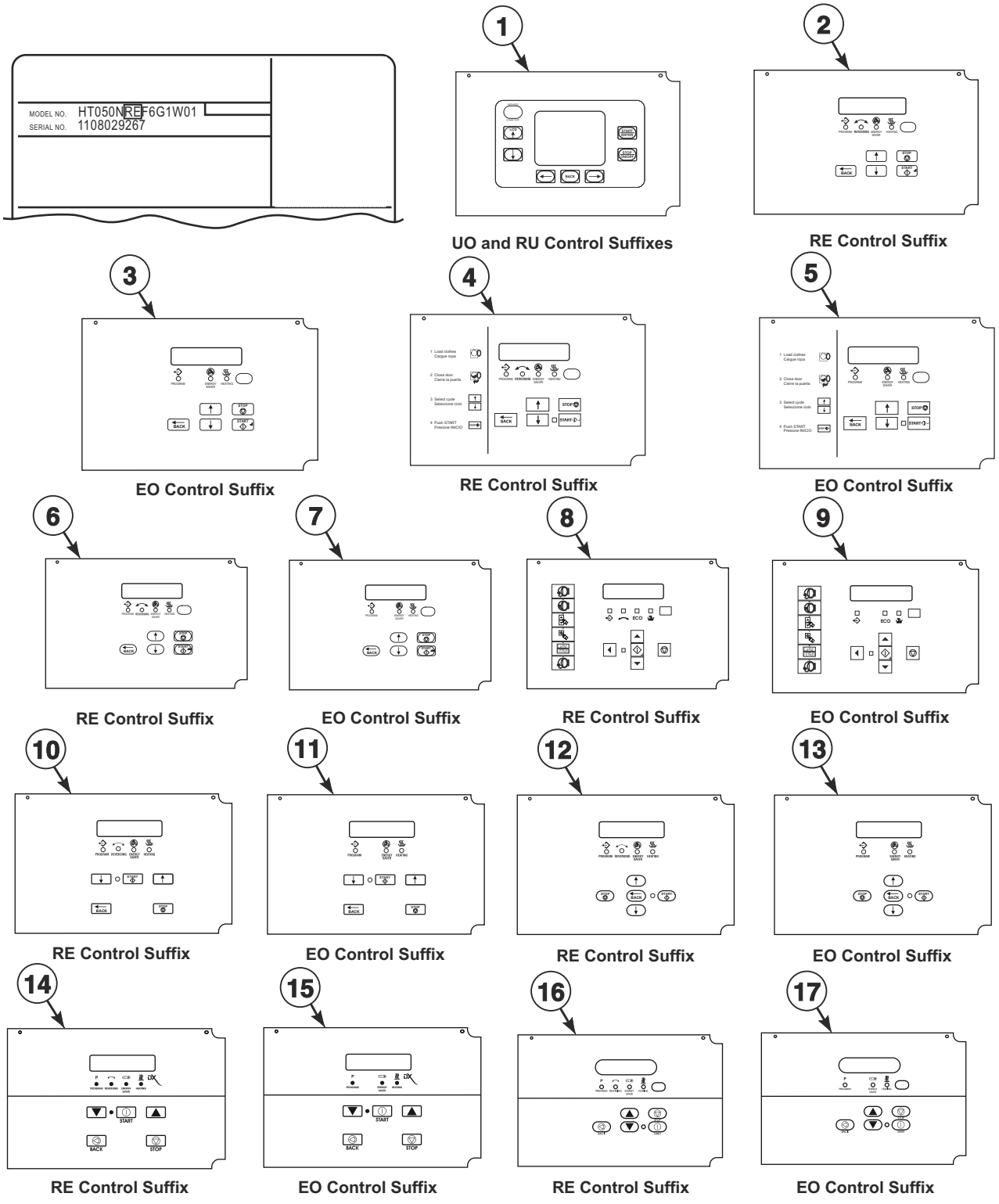

TMB3352P_70421801

© Copyright, Alliance Laundry Systems LLC – DO NOT COPY or TRANSMIT

Product Overview - Control Suffixes (Drawing 2 of 3)

REF	PART NO.	DESCRIPTION	COMMENTS
1	-	Control - Reversing	U models; RU: reversing UniLinc OPL
	-	Control - Nonreversing	U models; UO: UniLinc OPL
2	-	Control - Reversing	S models; RE: reversing LED OPL
3	-	Control - Nonreversing	S models; EO: LED OPL
4	-	Control - Reversing	H models; RE: reversing LED OPL
5	-	Control - Nonreversing	H models; EO: LED OPL
6	-	Control - Reversing	U models; RE: reversing LED OPL
7	-	Control - Nonreversing	U models; EO: LED OPL
8	-	Control - Reversing	B, C and I models; RE: reversing LED OPL
9	-	Control - Nonreversing	B, C and I models; EO: LED OPL
10	-	Control - Reversing	P models; Models through 9/30/14; RE: reversing LED OPL
11	-	Control - Nonreversing	P models; Models through 9/30/14; EO: LED OPL
12	-	Control - Reversing	N and Y models; L models through 5/31/15; RE: reversing LED OPL
13	-	Control - Nonreversing	N and Y models; L models through 5/31/15; EO: LED OPL
14	-	Control - Reversing	P models; Models starting 10/1/14 through 5/31/15; RE: reversing LED OPL
15	-	Control - Nonreversing	P models; Models starting 10/1/14 through 5/31/15; EO: LED OPL
16	-	Control - Reversing	L and P models; Models starting 6/1/15; RE: reversing LED OPL
17	-	Control - Nonreversing	L and P models; Models starting 6/1/15; EO: LED OPL

NOTE: OPL models have the following control suffixes: EO, RE, RU and UO.

© Copyright, Alliance Laundry Systems LLC – DO NOT COPY or TRANSMIT

Product Overview - Control Suffixes (Drawing 3 of 3)

G and K Models

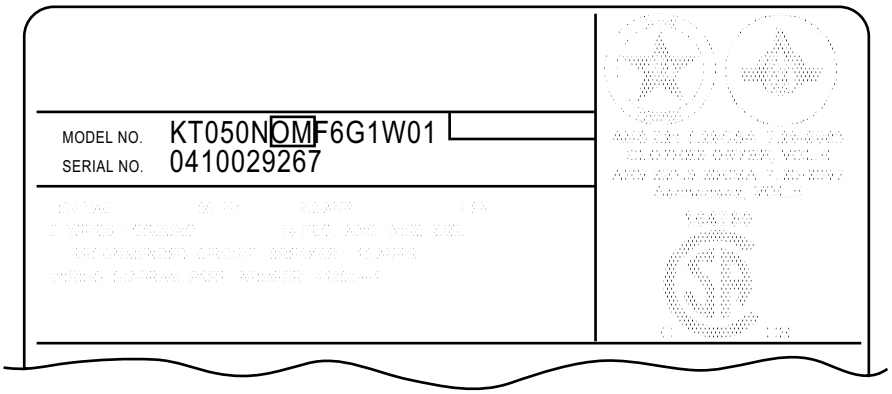

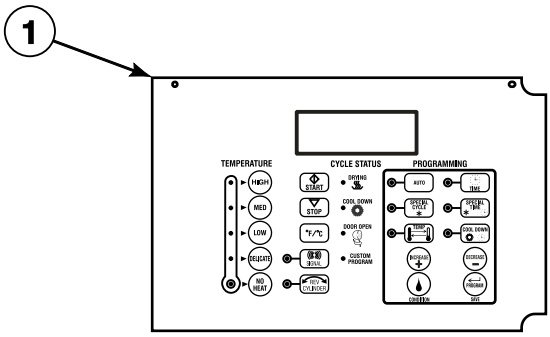

OM and RM Control Suffixes

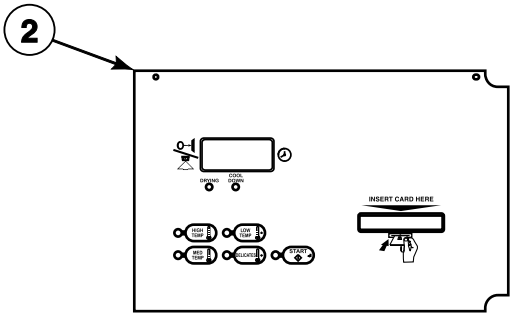

BG and BL Control Suffixes

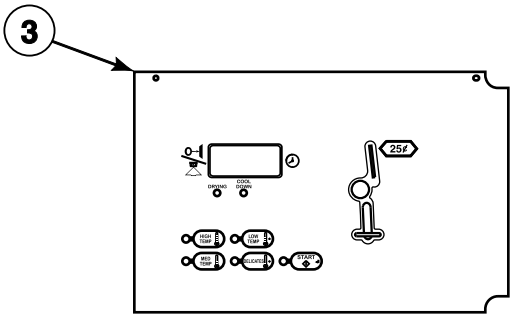

BB, BC, BW and BX Control Suffixes

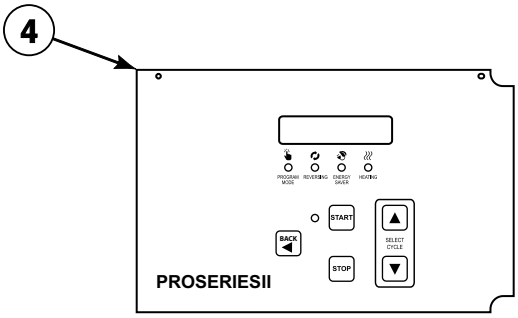

RE Control Suffix

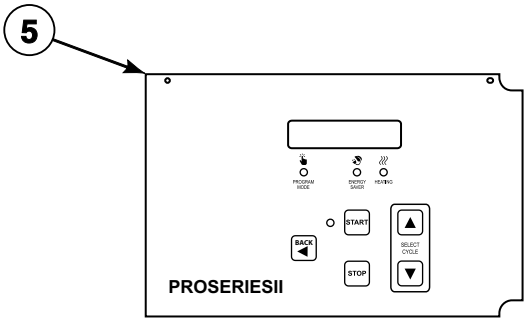

EO Control Suffix

TMB3196P_70421801

© Copyright, Alliance Laundry Systems LLC – DO NOT COPY or TRANSMIT

Product Overview - Control Suffixes (Drawing 3 of 3)

REF	PART NO.	DESCRIPTION	COMMENTS
1	-	Control - Nonreversing	OM: OPL micro
	-	Control - Reversing	RM: reversing OPL micro
2	-	Control - Nonreversing	BG: basic electronic, OPL mode BL: basic electronic, central pay
3	-	Control - Nonreversing	BC: basic electronic, coin BX: basic electronic, prep for coin
	-	Control - Reversing	BB: reversing basic electronic, coin BW: reversing basic electronic, prep for coin
4	-	Control - Reversing	RE: reversing LED OPL
5	-	Control - Nonreversing	EO: LED OPL

NOTE: Coin models have the following control suffixes: BB, BC, BW and BX

NOTE: OPL models have the following control suffixes: BG, BL, EO, OM, RE and RM.

© Copyright, Alliance Laundry Systems LLC – DO NOT COPY or TRANSMIT

Control Box

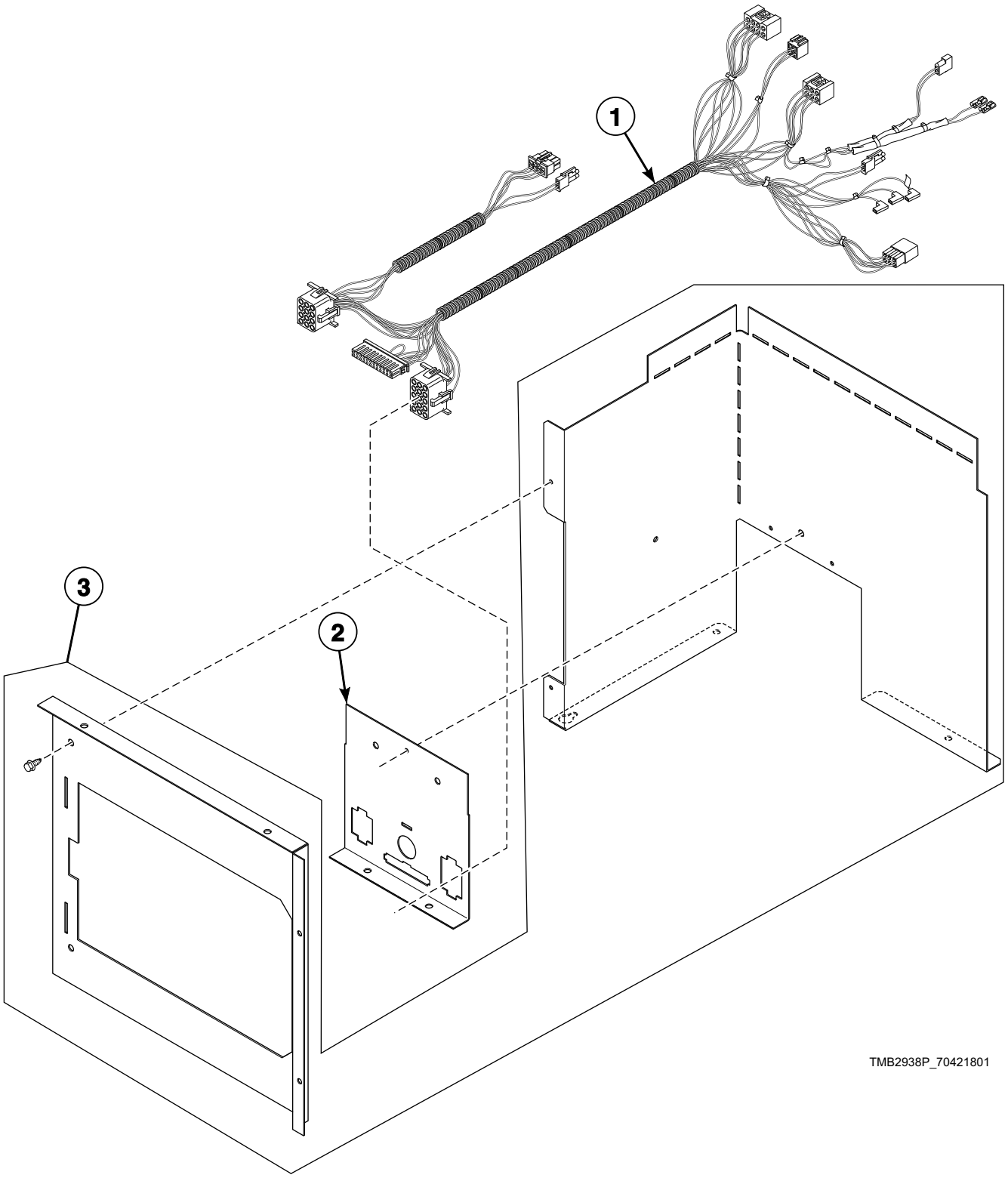

© Copyright, Alliance Laundry Systems LLC – DO NOT COPY or TRANSMIT

Control Box

REF	PART NO.	DESCRIPTION	COMMENTS
1	44137401P	Main Harness	Models through 7/31/11; Includes airflow switch wires
	44187002	Main Harness	Models starting 8/1/11; Includes airflow switch wires
2	70307002	Control Housing Cover	WC, WX and WY control suffixes
	70307001	Control Housing Cover	All other control suffixes
3	44180101	Control Box Assembly	

© Copyright, Alliance Laundry Systems LLC – DO NOT COPY or TRANSMIT

Fire Suppression System Control Box

B, C, G, H, I, K, L, M, P, S and U Gas and Steam Models
Models Through 7/31/11 with a F, K, L, N, T, U or W in the 11th Character (ST050NLCF6K1W01)
Models Starting 8/1/11 with a C, D or Y in the 11th Character

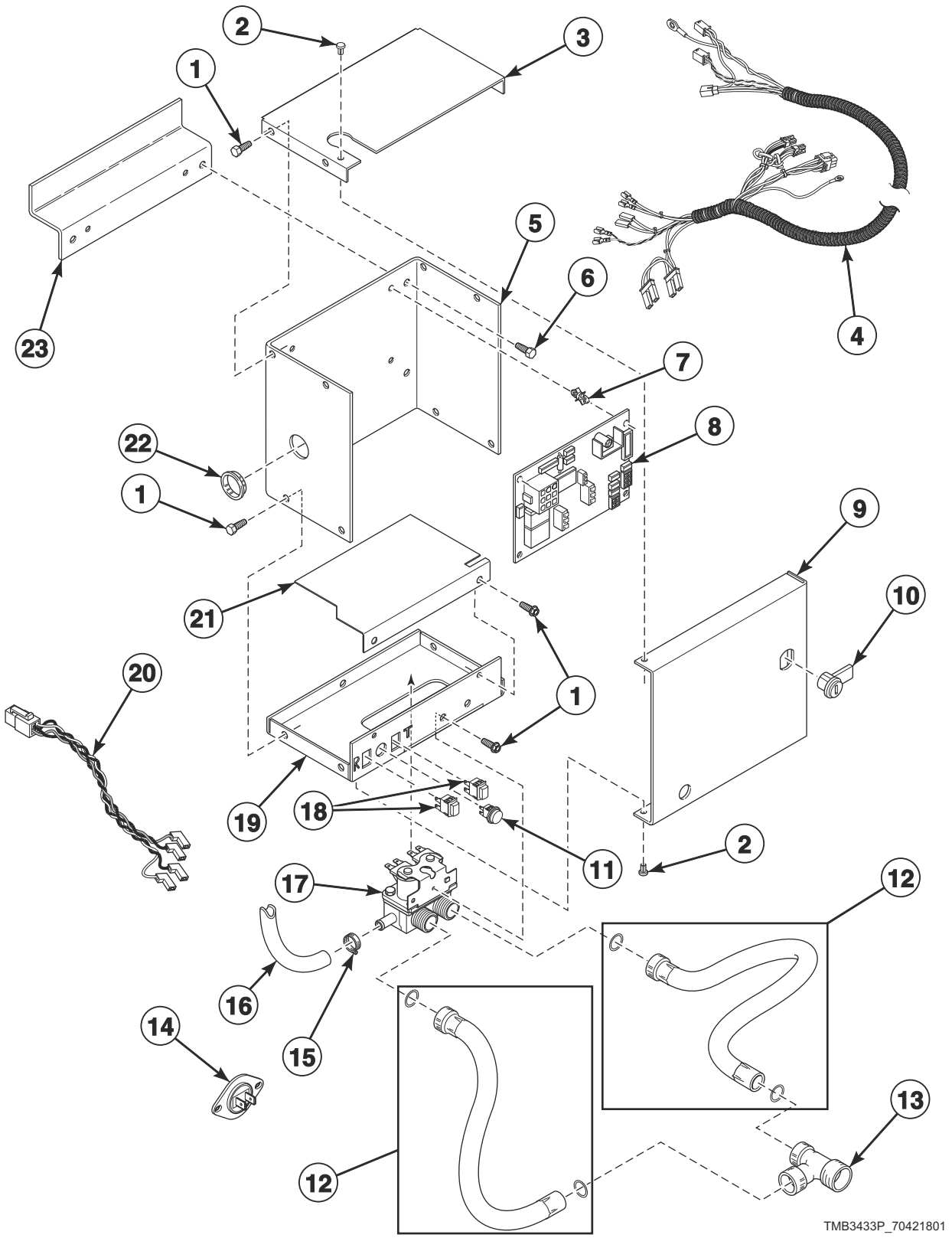

© Copyright, Alliance Laundry Systems LLC – DO NOT COPY or TRANSMIT

Fire Suppression System Control Box

REF	PART NO.	DESCRIPTION	COMMENTS
	44073601	Manifold	
1	430497	Screw	
2	M400713	Drive Rivet	
3	44065401	Control Box Top	
4	44141601P	Control Harness Assembly	
5	44065101	Control Box Housing	
6	51780	Screw	
7	D501523	Circuit Board Support	4 required
8	44063801P	Control	
9	44065201	Control Box Cover	
10	70733701	Lock, Key and Nut Kit	RL001 key code; Optional if same key is to be used for control lock
	70155601	Key	RL001
11	801432	Light	
12	F200116	Fill Hose	2 required; Non-CE and non-Australian models
	38349P	Fill Hose Kit	CE and Australian models
13	44069101	Hose Fitting	Non-CE and non-Australian models
14	44064701	Thermistor	2 required
15	36801	Hose Clamp	
16	44073301	Hose	39 inches; Outlet hose
17	36958P	Mixing Valve	
18	801434W	Push-to-Start Switch	2 required
19	44065301	Control Box Base	
20	44141701P	Sensor Harness Assembly	
21	44065701	Mixing Valve Shield Bracket	
22	70178701	Snap Bushing	
23	44065901	Bracket	For mounting fire suppression system box to machine

© Copyright, Alliance Laundry Systems LLC – DO NOT COPY or TRANSMIT

Single Drop Controls

C, H, I and S Models Except Models HR050E, HR050S, HT050D, SR050E, SR050S, ST050D and Thermal Oil Models Through 3/31/10
Models with SD and SX Control Suffixes

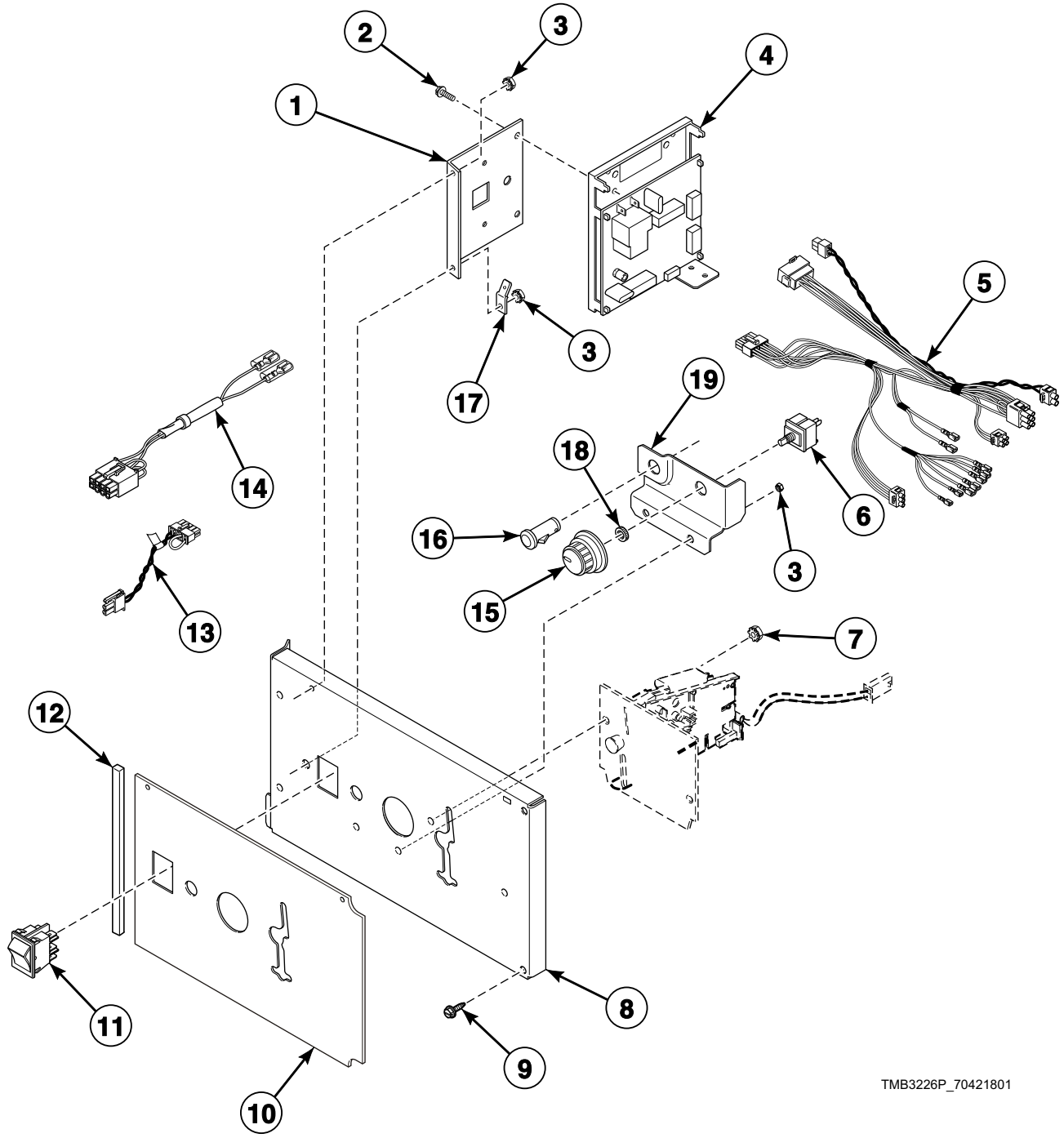

© Copyright, Alliance Laundry Systems LLC – DO NOT COPY or TRANSMIT

Single Drop Controls

REF	PART NO.	DESCRIPTION	COMMENTS
1	70357901	Control Chassis Mounting Bracket	
2	D501524	Screw	
3	70054	Nut	
4	D513139P	Control Assembly	
5	70369001	Control Panel Harness	Non-CE and non-Australian models
	70398401	Control Panel Harness	CE and Australian models
6	D511711	Temperature Selector Switch	
7	29786	Nut	
8	70363401	Control Door Assembly	
9	70069901	Screw	
10	70362901	Overlay	C, I and S models
	70363001	Overlay	H models
11	70455101	Rocker Switch	Start switch
12	70414101	Foam Gasket	
13	70324604	Jumper Calibration Wire	
14	70364104P	Coin Vault Switch Harness	Non-CE models
15	44104601	Temperature Knob	
16	801431	Light	
17	00177	Male Tab Terminal	
18	24205	Nut	
19	70350201	Temperature Selector Bracket	

© Copyright, Alliance Laundry Systems LLC – DO NOT COPY or TRANSMIT

Dual Digital Timer Controls

C, H, I, L, N, P, S, U and Y Models
G and K Models Starting 1/16/12
Models with QT and RQ Control Suffixes

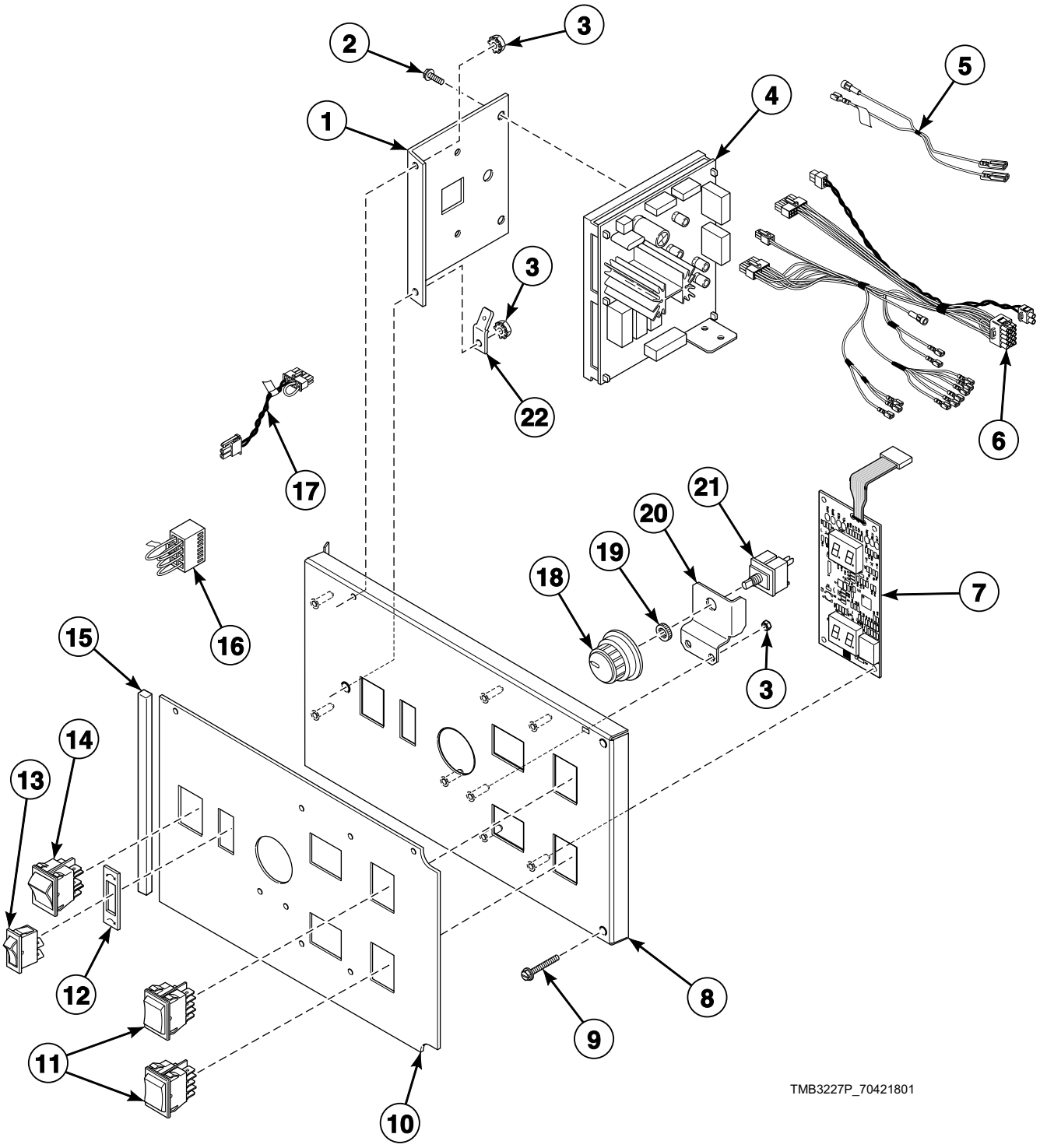

© Copyright, Alliance Laundry Systems LLC – DO NOT COPY or TRANSMIT

Dual Digital Timer Controls

REF	PART NO.	DESCRIPTION	COMMENTS
1	70357901	Control Chassis Mounting Bracket	
2	D501524	Screw	
3	70054	Nut	
4	D512202P	Control Assembly	
5	44100101P	Control Harness	Reversing; Use in addition to item 6
6	70367001P	Control Panel Harness	
7	D512218P	Display Assembly	C and I models through 7/14/14; All other models
	70503101P	Control Assembly	C and I models; Models starting 7/15/14
8	70360601	Control Plate Assembly	
9	70069901	Screw	
10	70362201	Overlay	G, K, L, N, S and Y models; C and I models through 7/14/14; U models through 8/17/14; P models starting 1/15/15; Nonreversing
	70362202	Overlay	G, K, L, N, S and Y models; C and I models through 7/14/14; U models through 8/17/14; P models starting 1/15/15; Reversing
	70504701	Overlay	C and I models; Models starting 7/15/14; Nonreversing
	70504702	Overlay	C and I models; Models starting 7/15/14; Reversing
	70494001	Overlay	U models; Models starting 8/18/14; Nonreversing
	70494002	Overlay	U models; Models starting 8/18/14; Reversing
	70362501	Overlay	H models; Nonreversing
	70362502	Overlay	H models; Reversing
	70362401	Overlay	P models; Models through 1/14/15; Nonreversing
	70362402	Overlay	P models; Models through 1/14/15; Reversing
11	70461301	Rocker Switch	
12	M413236	Switch Plate	Reversing
13	44099601	Rocker Switch	Reversing
14	70455101	Rocker Switch	Start switch
15	70414101	Foam Gasket	
16	70364103	Bypass Harness	Non-CE models
17	70324604	Jumper Calibration Wire	
18	44104601	Temperature Knob	
19	24205	Nut	
20	70391701	Temperature Selector Switch Bracket	
21	D511711	Temperature Selector Switch	
22	00177	Male Tab Terminal	

© Copyright, Alliance Laundry Systems LLC – DO NOT COPY or TRANSMIT

DMP Control

C and I Models
Models with DO, DV, DX and RD Control Suffixes
Coin Models Through 4/1/10; OPL Models Through 7/31/11

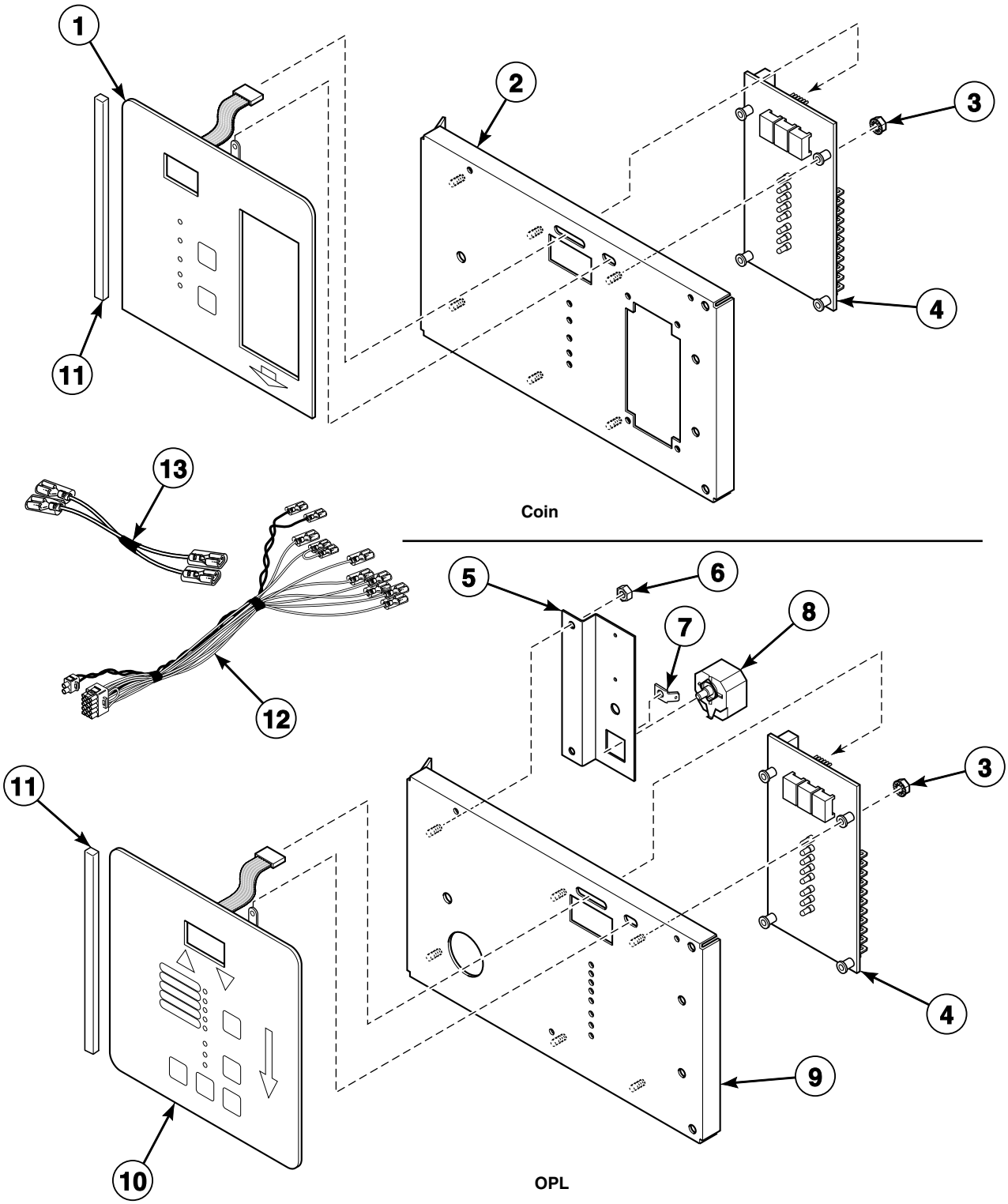

© Copyright, Alliance Laundry Systems LLC – DO NOT COPY or TRANSMIT

DMP Control

REF	PART NO.	DESCRIPTION	COMMENTS
	M4797P3	Control Conversion Kit	C models except CT050T and CU050T; DV and DX control suffixes
1	44039402P	Membrane Switch	Coin
2	44041001	Control Plate Assembly	Coin; Includes studs
3	29787	Nut	
4	44037801P	Electronic Control	
5	44041701	Relay/Buzzer Bracket	
6	70054	Nut	
7	00177	Male Tab Terminal	
8	D505447	Adjustable Buzzer	
9	44040901	Control Plate Assembly	OPL; Includes studs
10	44037901P	Membrane Switch	OPL
11	70414101	Foam Gasket	
12	70341801P	Control Panel Harness Assembly	Non-CE models
	70341901P	Control Panel Harness	CE models; Coin
	70342001P	Control Panel Harness	CE models; OPL
13	44042701	Jumper Set Assembly	Coin; Use in addition to item 12
	44042801	Jumper Set Assembly	OPL; Buzzer; Use in addition to item 12

© Copyright, Alliance Laundry Systems LLC – DO NOT COPY or TRANSMIT

DX4 Electronic Control

B and I Models

Models with 3B, 3K, 3L, 3O, 3V, 3W, 3X and R3 Control Suffixes

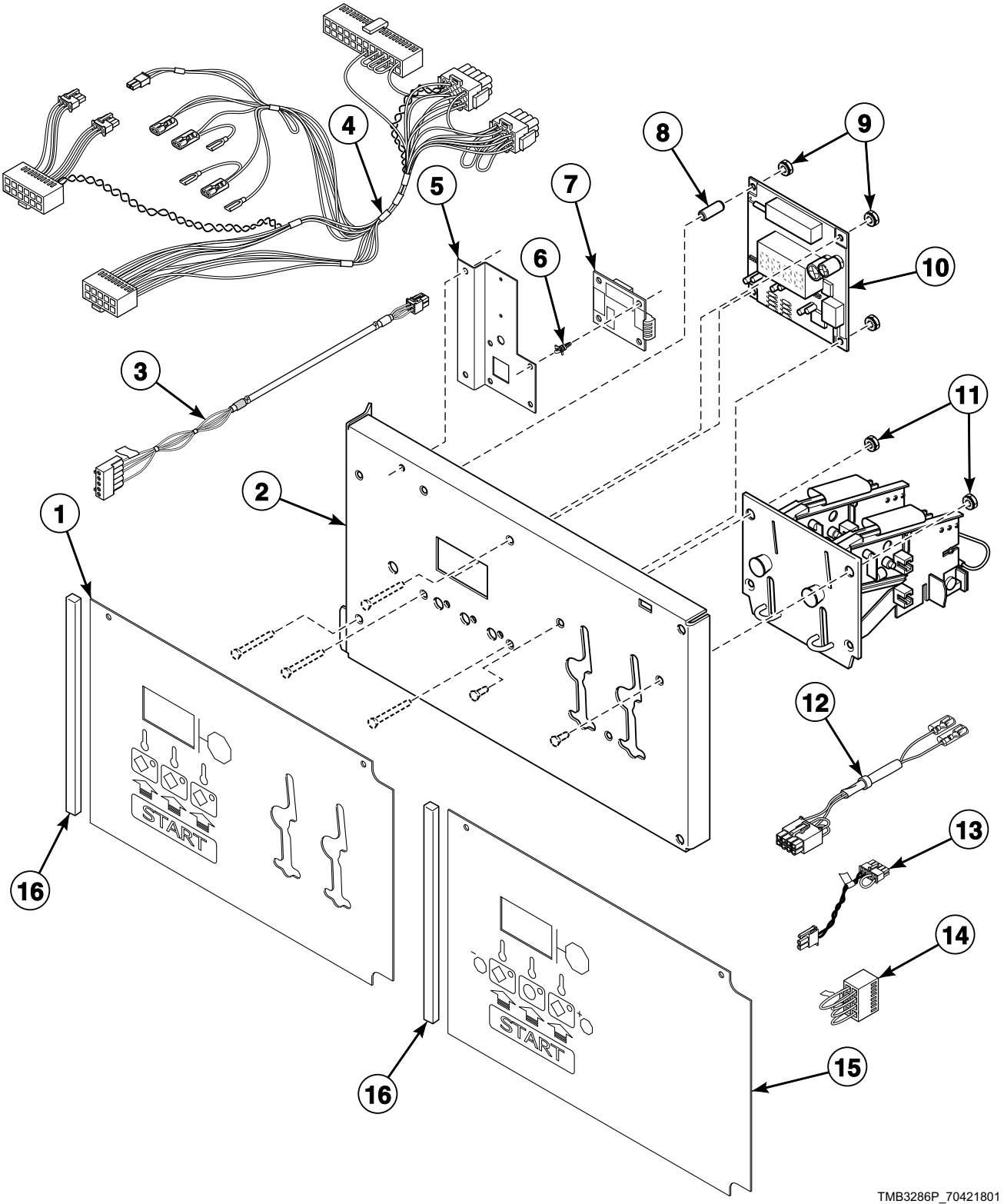

© Copyright, Alliance Laundry Systems LLC – DO NOT COPY or TRANSMIT

DX4 Electronic Control

REF	PART NO.	DESCRIPTION	COMMENTS
	M412534	Relay	Mounts to item 5
1	44050502	Graphic Overlay	Dual; Coin (shown); Models through 7/31/11
	44239402	Graphic Overlay	Dual; Coin (shown); Models starting 8/1/11
	44050501	Graphic Overlay	Single; Coin; Models through 7/31/11
	44239401	Graphic Overlay	Single; Coin; Models starting 8/1/11
	44239403	Graphic Overlay	Prep for central pay
	259/00005/00	Overlay	PRO HC control replacement; Refer to Parts Information Insert 8-18-251 for list of machine serial numbers
2	44050701P	Control Plate Kit	Includes studs
3	70491501	Central Pay Harness	3K and 3L control suffixes
4	70485301	Control Panel Harness	Non-CE and non-Australian models
	70489901	Control Panel Harness	CE and Australian models
5	44263501	Bracket	CE models; All other models with 3K and 3L control suffixes
6	211/00119/00	Standoff	4 required
7	209/00471/75	Central Pay Interface Control Assembly	3K and 3L control suffixes
8	44050601	Sleeve	4 required
9	29787	Nut	
10	70462305P	Control Assembly	3O control suffix
	70462306P	Control Assembly	R3 control suffix
	70462365P	Control Assembly	3B, 3V, 3W and 3X control suffixes
	70462372	Control Assembly	3K and 3L control suffixes
	254/00070/00P	Control Board	PRO HC control replacement; Refer to Parts Information Insert 8-18-251 for list of machine serial numbers
11	29786	Nut	2 required
12	70364104P	Coin Vault Switch Harness	3B and 3V control suffixes; Non-CE models
13	70324604	Jumper Calibration Wire	
14	70364103	Bypass Harness	3O, 3W, 3X and R3 control suffixes; Non-CE models
15	44240501	Graphic Overlay	OPL
16	70414101	Foam Gasket	

© Copyright, Alliance Laundry Systems LLC – DO NOT COPY or TRANSMIT

OPL Microprocessor Controls

H, S and U Models Through 7/31/11
G, K, L and P Models Through 1/1/12
Models with OM and RM Control Suffixes

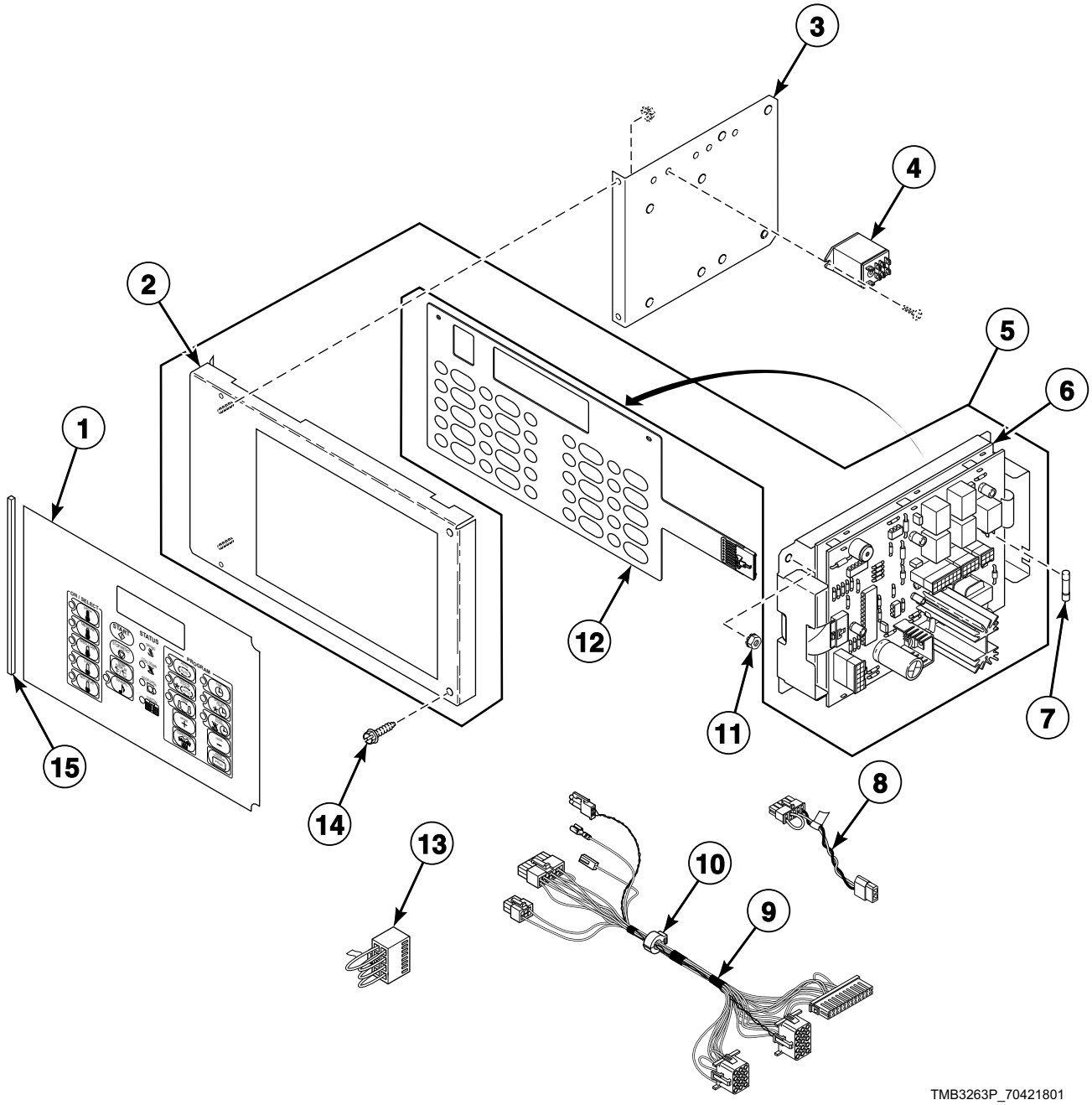

© Copyright, Alliance Laundry Systems LLC – DO NOT COPY or TRANSMIT

OPL Microprocessor Controls

REF	PART NO.	DESCRIPTION	COMMENTS
	M4457P3	RC Filter Kit	Includes (2) F330217P RC Filter and instructions
1	70115801	Overlay	L, S and U models; Nonreversing; Text and icon
	70128401	Overlay	L, S and U models; Reversing; Text and icon
	70130401	Overlay	S and U models; Nonreversing; Icon
	70130501	Overlay	S and U models; Reversing; Icon
	70128701	Overlay	H models; Nonreversing; Text and icon
	70128601	Overlay	H models; Reversing; Text and icon
	70130601	Overlay	H models; Nonreversing; Icon
	70130701	Overlay	H models; Reversing; Icon
	70130301	Overlay	P models; Nonreversing; Text and icon
	70135301	Overlay	P models; Reversing; Text and icon
	44130002	Overlay	G and K models; Nonreversing; Text and icon
	44130001	Overlay	G and K models; Reversing; Text and icon
2	70175805	Control Plate Assembly	
3	44018601	Temperature Control Bracket	
4	M412534	Relay	
5	44013601P	Control Assembly	Does not include overlay or control panel harness
6	70228401P	Control Kit	With tape
7	70406501	Fuse	
8	70084304	Jumper Calibration Wire	OM control suffix
	70084305	Jumper Calibration Wire	RM control suffix
9	70335301P	Control Panel Harness	Non-CE models
	70382701P	Control Panel Harness	CE models
10	M413930P	Ferrite Core Assembly	
11	70054	Nut	4 required
12	M414368P	Membrane Switch	
13	70364103	Bypass Harness	Non-CE models
14	70069901	Screw	2 required
15	70414101	Foam Gasket	

© Copyright, Alliance Laundry Systems LLC – DO NOT COPY or TRANSMIT

Coin Drop Components for MDC Models

G, H, I, K, L, N, P and S Models Except Thermal Oil Models and Models with 2nd Digit R
Models with BB, BC, BK, BL, BW and BX Control Suffixes

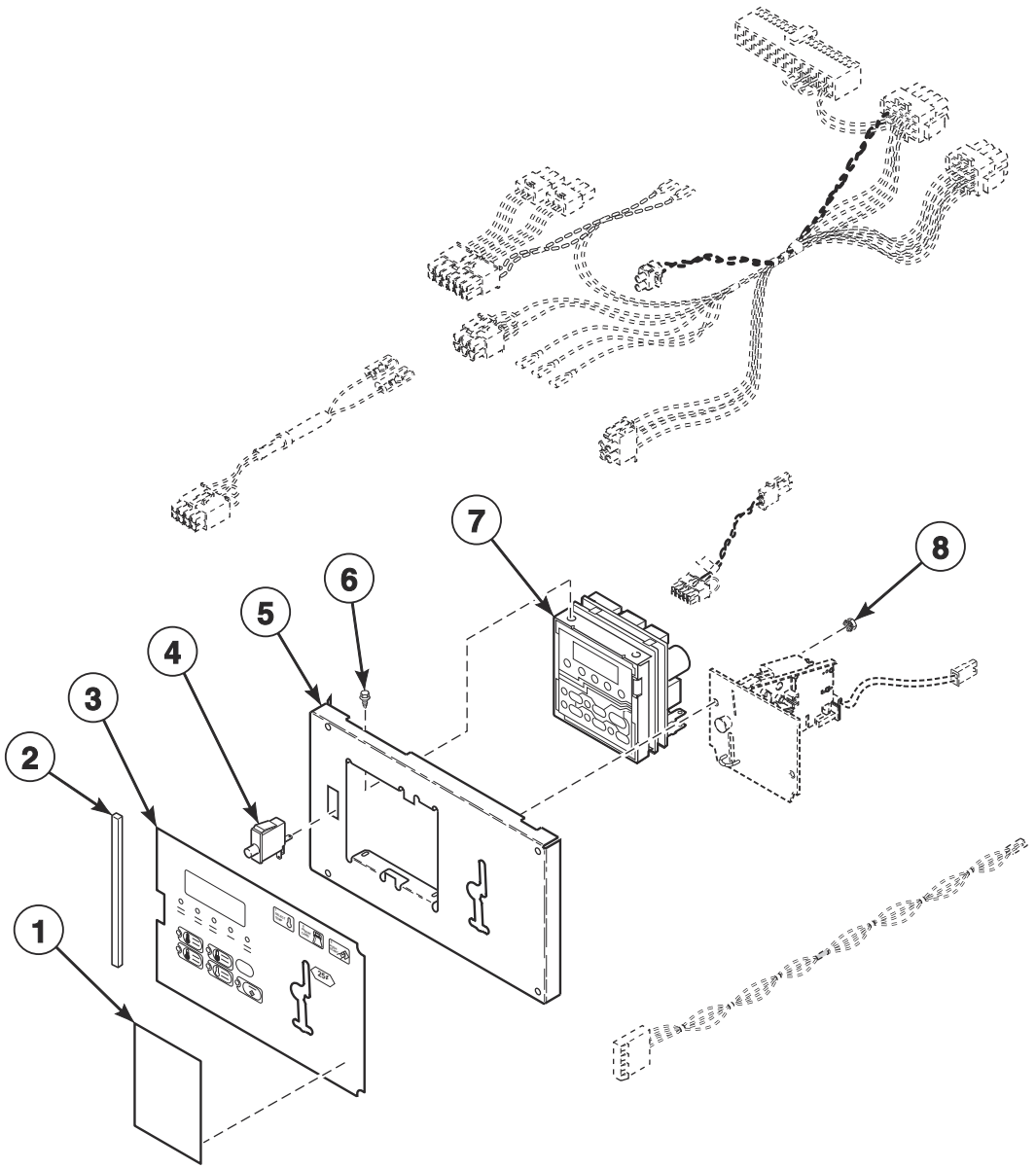

TMB3287P_70421801

© Copyright, Alliance Laundry Systems LLC – DO NOT COPY or TRANSMIT

Coin Drop Components for MDC Models

REF	PART NO.	DESCRIPTION	COMMENTS
	70321201	Coin Drop Overlay Kit	P models
1	39564	Nameplate	S models; Models with BK** and BL** control suffixes; Cover
	70246301	Coin Cover Overlay	G, I, K, L and N models; Models with BK** and BL** control suffixes; Cover
	70286701	Overlay	P models; Models through 9/30/14 with BK** and BL** control suffixes; Cover
	70510501	Overlay	P models; Models starting 10/1/14; Single drop
	70510601	Overlay	P models; Models starting 10/1/14; Dual drop
	70510701	Overlay	P models; Models starting 10/1/14; World drop
	70510801	Overlay	P models; Models starting 10/1/14 with BK* and BL* control suffixes
	70510901	Overlay	P models; Blank for central pay
	70275401	Overlay	H models; Models with BK** and BL** control suffixes; Cover
2	70414101	Foam Gasket	
3	70257701	Overlay	L and S models; Models with BC, BK**, BL** and BX control suffixes; Text; Single drop
	70261001	Overlay	L, N and S models; Models with BC, BK**, BL** and BX control suffixes; Icon; Single drop
	70257702	Overlay	L and S models; Models with BC and BX control suffixes; Text; Dual drop
	70261002	Overlay	L, N and S models; Models with BC and BX control suffixes; Icon; Dual drop
	70258001	Overlay	H models; Models with BC, BK**, BL** and BX control suffixes; Text; Single drop
	70261201	Overlay	H models; Models with BC, BK**, BL** and BX control suffixes; Icon; Single drop
	70258002	Overlay	H models; Models with BC and BX control suffixes; Dual drop
	70261202	Overlay	H models; Models with BC and BX control suffixes; Icon; Dual drop
	70129501	Overlay	P models; Models through 9/30/14 with BC* and BX* control suffixes; Single drop
	70129601	Overlay	P models; Models through 9/30/14 with BC* and BX* control suffixes; Dual drop
	70321001	Overlay	P models; Models through 9/30/14 with BC* and BX* control suffixes; World drop
	70259001	Overlay	P models; Models through 9/30/14 with BC* and BX* control suffixes
	70508701	Overlay	P models; Models starting 10/1/14
	70537401	Overlay	North America P models; Single drop
	70537402	Overlay	North America P models; Dual drop
	70453001	Overlay	G and K models; Text; Single drop
	70453002	Overlay	G and K models; Text; Dual drop
	70491901	Overlay	I models; Models through 7/14/14 with BC and BX control suffixes; Single drop
	70491902	Overlay	I models; Models through 7/14/14 with BC and BX control suffixes; Dual drop
	70505201	Overlay	I models; Models starting 7/15/14 with BC and BX control suffixes; Single drop
	70505202	Overlay	I models; Models starting 7/15/14 with BC and BX control suffixes; Dual drop
4	70413301	Pushbutton Switch	
5	70291001P	Control Plate Kit	
6	D501524	Screw	4 required for mounting control
7	D514273P	Control Assembly	I models; Models starting 7/15/14
	D511867P	Control Assembly	I models through 7/14/14; All other models
	D510036P	Membrane Switch	Order to replace touchpad for D511867P Control Assembly
8	29786	Nut	3 required

*** NOTE: P models with BC or BX control suffixes require an overlay and coin drop overlay.**

**** NOTE: BK and BL control suffixes require an overlay and overlay cover specific to model.**

© Copyright, Alliance Laundry Systems LLC – DO NOT COPY or TRANSMIT

Coin Drop - Wire Harnesses for MDC Models

G, H, I, K, L, N, P and S Models Except Thermal Oil Models and Models with 2nd Digit R
Models with BB, BC, BK, BL, BW and BX Control Suffixes

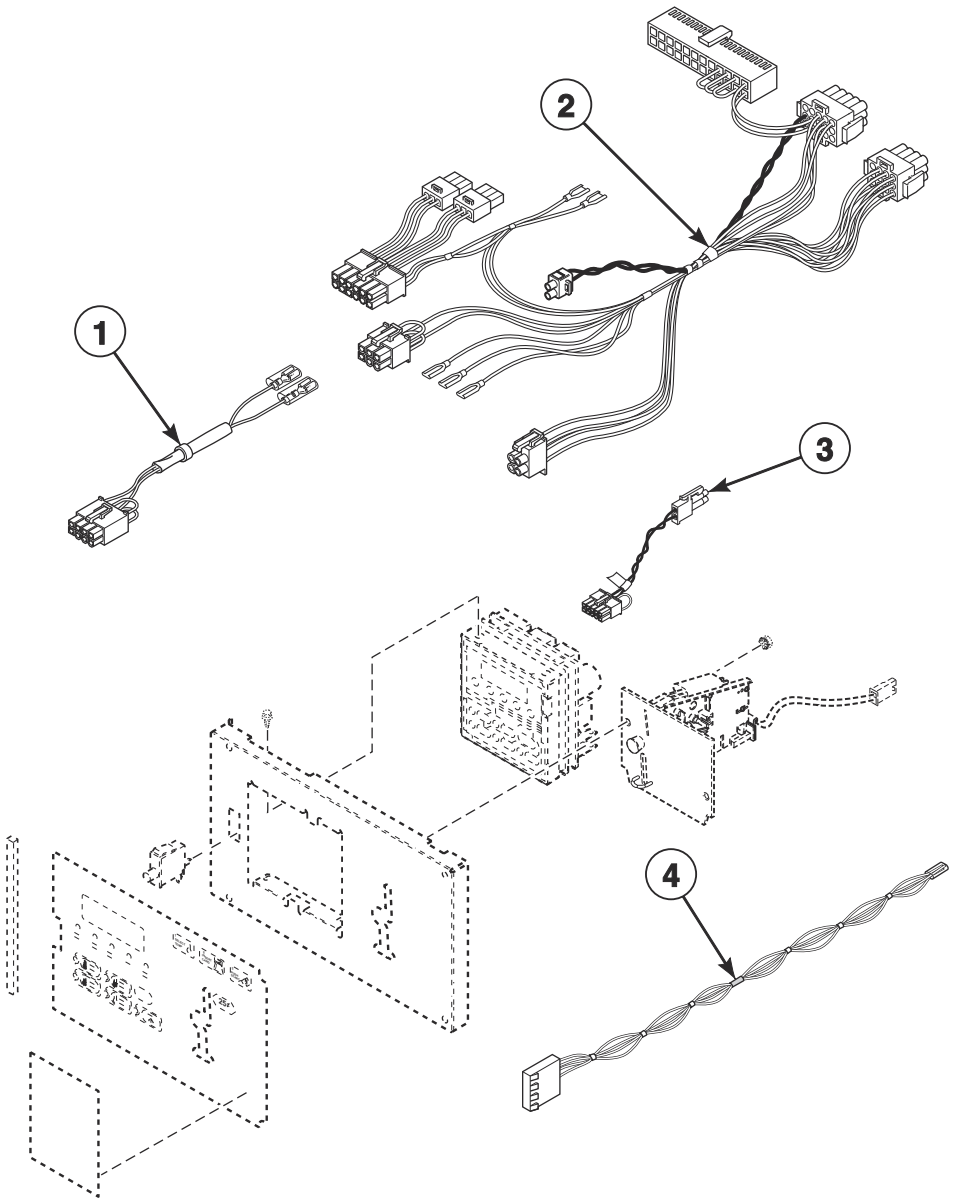

TMB3287PA_70421801

© Copyright, Alliance Laundry Systems LLC – DO NOT COPY or TRANSMIT

Coin Drop - Wire Harnesses for MDC Models

REF	PART NO.	DESCRIPTION	COMMENTS
1	70364104P	Coin Vault Switch Harness	Non-CE models
2	70429101P	Control Panel Harness	Non-CE models
	70429201P	Control Panel Harness	CE models
3	70324604	Jumper Calibration Wire	
4	70484601	Central Pay Harness	BK and BL control suffixes

© Copyright, Alliance Laundry Systems LLC – DO NOT COPY or TRANSMIT

Central Pay and Card Reader MDC Models

G, H, I, K, L, N, P and S Models Except Thermal Oil Models and Models with 2nd Digit R
Models with BK, BL, BY and BZ Control Suffixes
Models with BG Control Suffix Through 1/15/12

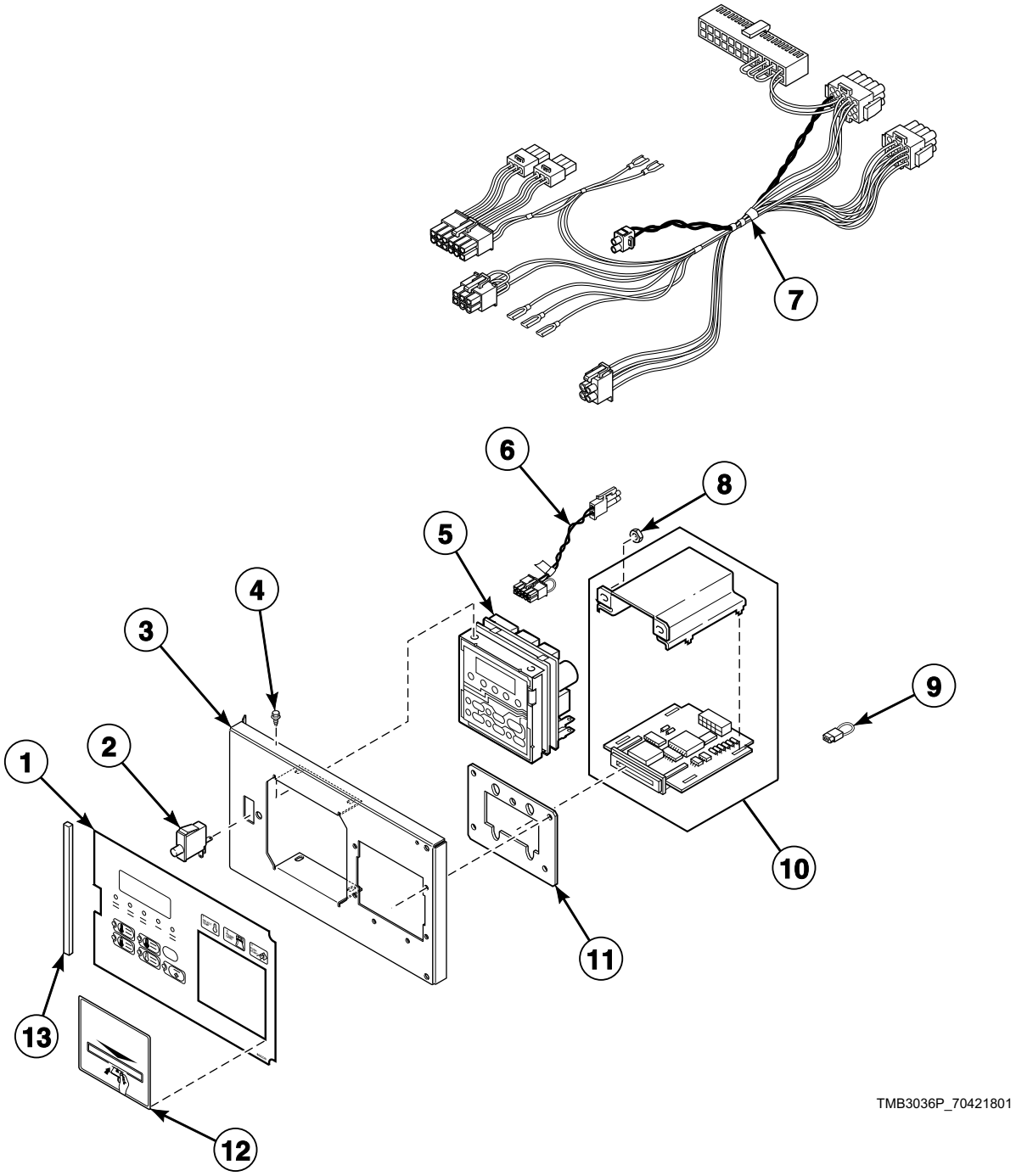

© Copyright, Alliance Laundry Systems LLC – DO NOT COPY or TRANSMIT

Central Pay and Card Reader MDC Models

REF	PART NO.	DESCRIPTION	COMMENTS
1	70266701	Overlay	L and S models; Models with BY control suffix; Text
	N/A	Overlay	L and S models; Models with BY control suffix; Icon
	70257703	Overlay	L and S models except model ST050D; Models with BY control suffix; Text
	70261003	Overlay	L, N and S models except model ST050D; Models with BY control suffix; Icon
	70259001	Overlay	P models; Models through 9/30/14 with BL* control suffix
	70509701	Overlay	P models; Models starting 10/1/14
	70537403	Overlay	North America P models
	70266801	Overlay	H models; Models with BY control suffix; Text
	70258003	Overlay	H models except model HT050D; Models with BY control suffix; Text
	70453101	Overlay	G and K models
	70491903	Overlay	I models; Models through 7/14/14 with BY control suffix
	70505203	Overlay	I models; Models starting 7/15/14
2	70413301	Pushbutton Switch	
3	70497201	Control Plate Assembly	H, I, N, P and S models except models HT050D and ST050D; Models with BY control suffix
	70291001P	Control Plate Kit	H, I, L, N, P and S models; Models with BK and BL control suffixes
4	D501524	Screw	
5	D514273P	Control Assembly	I models; Models starting 7/15/14
	D511867P	Control Assembly	I models through 7/14/14; All other models
	D510036P	Membrane Switch	Order to replace touchpad for D511867P Control Assembly
6	70324604	Jumper Calibration Wire	
7	70429101P	Control Panel Harness	Non-CE models
	70358701	Control Panel Harness	CE models
8	70054	Nut	
9	70364103	Bypass Harness	Non-CE models
10	D510068P	Card Reader and Bracket Assembly	
11	70208801	Mounting Plate	H, I, N, P and S models except models HT050D and ST050D; Models with BY control suffix
12	70334201	Card Reader Overlay	N and S models; Black
	70334301	Card Reader Overlay	H models; Gray
	70246301	Coin Cover Overlay	G, K, L and N models
	70511001	Overlay	P models; Models starting 10/1/14; With card slot
13	70414101	Foam Gasket	

N/A = Part no longer available

*** NOTE: BK and BL control suffixes require an overlay and overlay cover specific to model.**

© Copyright, Alliance Laundry Systems LLC – DO NOT COPY or TRANSMIT

Optional Card Reader Mountings for MDC Models

H, I, K, L, N, P and S Models Except Thermal Oil Models and Models with 2nd Digit R
Models with BY Control Suffix

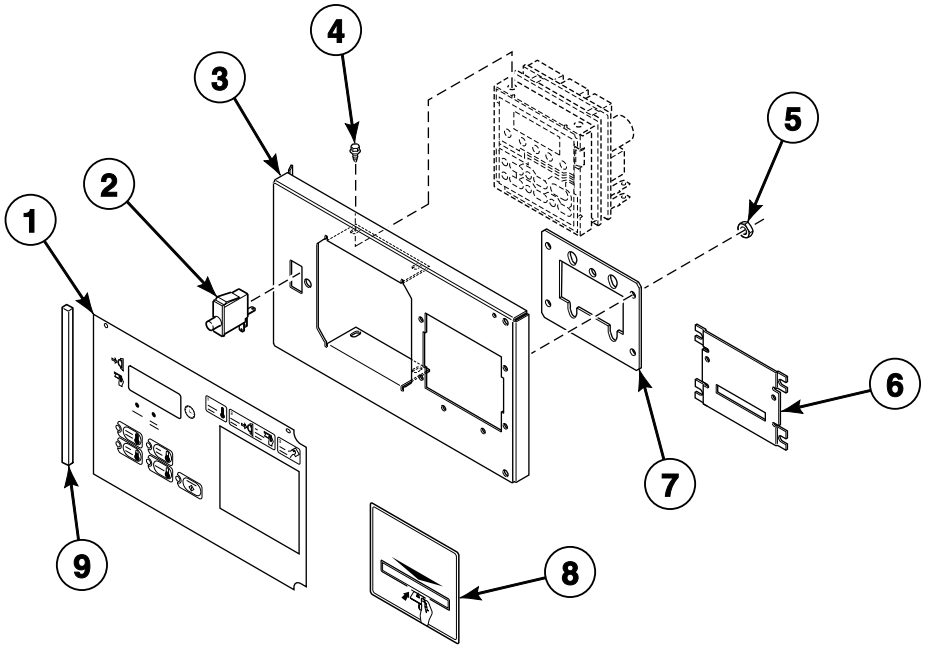

TMB3037P_70421801

© Copyright, Alliance Laundry Systems LLC – DO NOT COPY or TRANSMIT

Optional Card Reader Mountings for MDC Models

REF	PART NO.	DESCRIPTION	COMMENTS
1	70257703	Overlay	L and S models; Text and icon
	70258003	Overlay	H models; Text and icon
	70261003	Overlay	N models; Icon
	70453101	Overlay	K models
	70491903	Overlay	I models; Models through 7/14/14
	70505203	Overlay	I models; Models starting 7/15/14
	70509701	Overlay	P models
	70537403	Overlay	North America P models
2	70413301	Pushbutton Switch	
3	70497201	Control Plate Assembly	
4	D501524	Screw	4 required
5	70054	Nut	4 required
6	44089501	Slot Card Plate Assembly	Included in literature packet
7	70208801	Mounting Plate	
8	70334201	Card Reader Overlay	Black; Included in literature packet
	70334301	Card Reader Overlay	Gray; Included in literature packet
	70511001	Overlay	P models; With card slot
9	70414101	Foam Gasket	

© Copyright, Alliance Laundry Systems LLC – DO NOT COPY or TRANSMIT

Coin Drops

All Models Except U Models and Models with 2nd Digit R

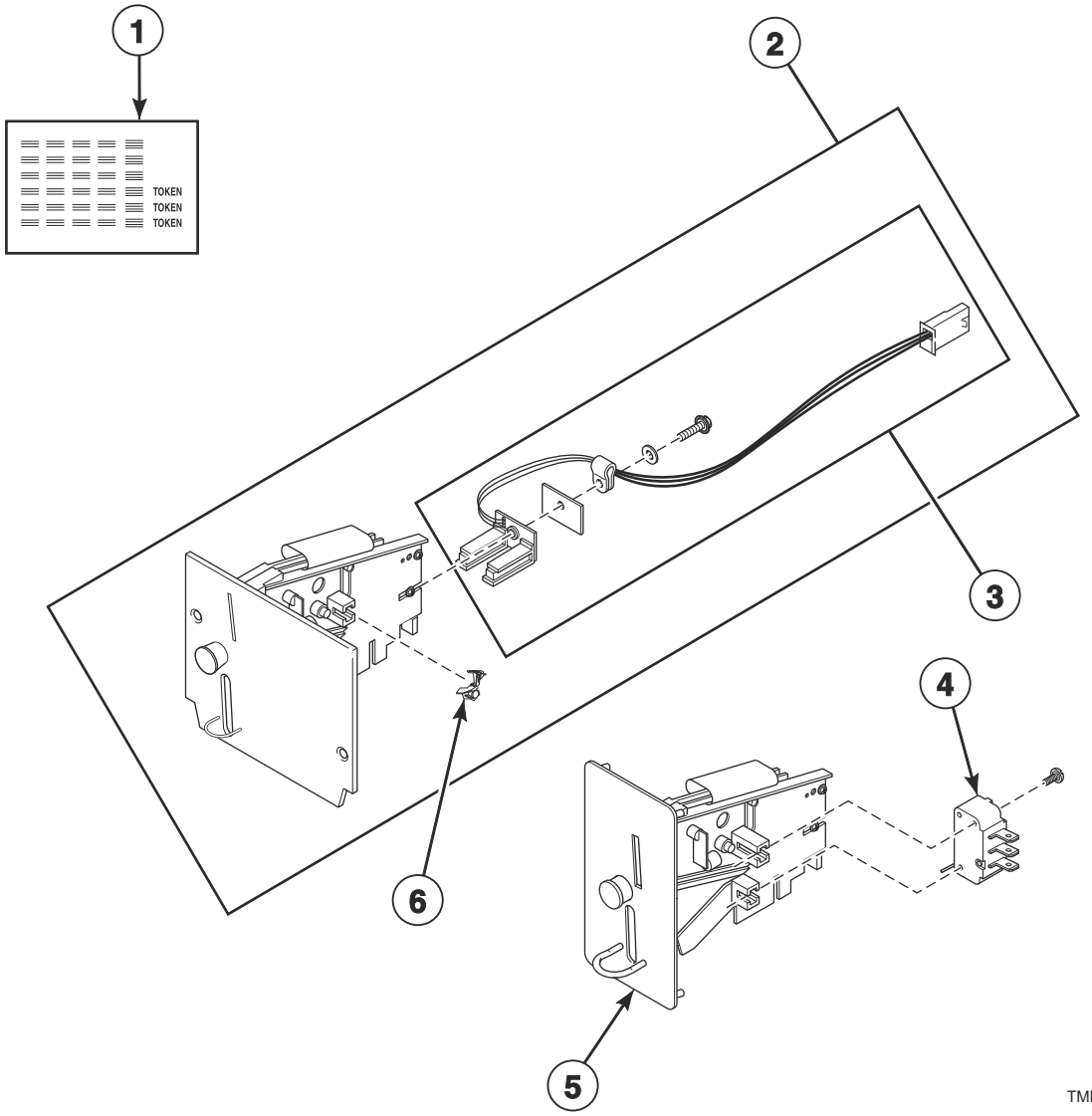

© Copyright, Alliance Laundry Systems LLC – DO NOT COPY or TRANSMIT

Coin Drops

REF	PART NO.	DESCRIPTION	COMMENTS
1	38725	Coin Identification Paper	
2	70294103P	Electronic Coin Drop Assembly	United Kingdom (default) and Europe
	70294104	Electronic Coin Drop Assembly	Euro (default), Denmark and Norway
	CK099	Electronic Coin Drop Kit	Australian (default), New Zealand, Hong Kong, South Korea and Malaysia
	70513306	Electronic Coin Drop Assembly	Mexico (default), Ecuador and USA dollar
	70294107	Electronic Coin Drop Assembly	Lithuania (default), Latvia and Europe
	70513311	Electronic Coin Drop Assembly	Malaysia (default) and China
	70294117	Electronic Coin Drop Assembly	Russia; 5.00 and 10.00
	70294119	Electronic Coin Drop Assembly	Thailand; 1, 5 and 10 Baht
	70294120	Electronic Coin Drop Assembly	Chile; Chilean peso
	70294121	Electronic Coin Drop Assembly	Singapore
	70441601P	Coin Drop	USA; $.25; Single
	70256402P	Coin Drop	USA; $.25 and $1.00; Dual
	70429001	Coin Drop	B models; USA
	38475	Coin Drop Assembly	Japan; 100 yen
	38519	Coin Drop Assembly	Japan; 100 and 500 yen
	38467	Coin Drop Assembly	Australia; .20 and 1.00
	70447301	Coin Drop Assembly	Australia; 1.00 and 2.00
	70482401	Coin Drop Assembly	New Zealand; 1.00 and 2.00
	CK097	Coin Drop Kit	Token; Jeton; Grooves on the face of the token; CE models
	210195	Coin Drop Assembly	Euro; .20 and 1.00
	210196	Coin Drop Assembly	Euro; .50 and 1.00
	70283102	Coin Drop Assembly	Euro; .20 and .50
	70294111	Electronic Coin Drop Assembly	Euro; .10, .20, .50, 1.00 and 2.00
	38462P	Coin Drop Assembly	Token; 118-1; .880 diameter x .079 thick; Brass
	38463	Coin Drop Assembly	Token; 118-5; .990 diameter x .081 thick; Silver
	70471601	Coin Drop Assembly	Token; 7K
	38464P	Coin Drop Assembly	Canada; .25
	70441602	Coin Drop Assembly	Canada; .25 and 1.00
	38472	Coin Drop Assembly	England; 20 pence and 1 pound
	38521	Coin Drop Assembly	Korea; 100 and 500 won
	38963P	Coin Drop	Token 118-16 not available; Replacement for 38963P Coin Drop only
	39157	Coin Drop Assembly	Israel; Shekel
	CK077	Coin Drop Kit	Taiwan; 10 NT
	70281102	Coin Drop Assembly	Taiwan; Dual drop
	CK114	Coin Drop Assembly	Singapore; Old 1.00
	CK123	Coin Drop Kit	Singapore; New 1.00
3	200674P	Opto Coupler	
4	70286101P	Coin Drop Switch	B, C and I models
5	44039701P	Coin Drop Assembly	USA; $.25; DO, DV, DX and RD control suffixes
	44039702	Coin Drop Assembly	Mexico; 2 peso; DO, DV, DX and RD control suffixes
	44039703	Coin Drop Assembly	Token; .880; DO, DV, DX and RD control suffixes
	44039704	Coin Drop Assembly	Japan; 100 yen; DO, DV, DX and RD control suffixes
	44039705	Coin Drop Assembly	England; 20 pence; DO, DV, DX and RD control suffixes
	44039706	Coin Drop Assembly	Token; .800; DO, DV, DX and RD control suffixes
	44039707	Coin Drop Assembly	England; 50 pence; DO, DV, DX and RD control suffixes
6	201595P	Wire Guard	

© Copyright, Alliance Laundry Systems LLC – DO NOT COPY or TRANSMIT

Coin Drop Kits

All Models Except U Models and Models with 2nd Digit R

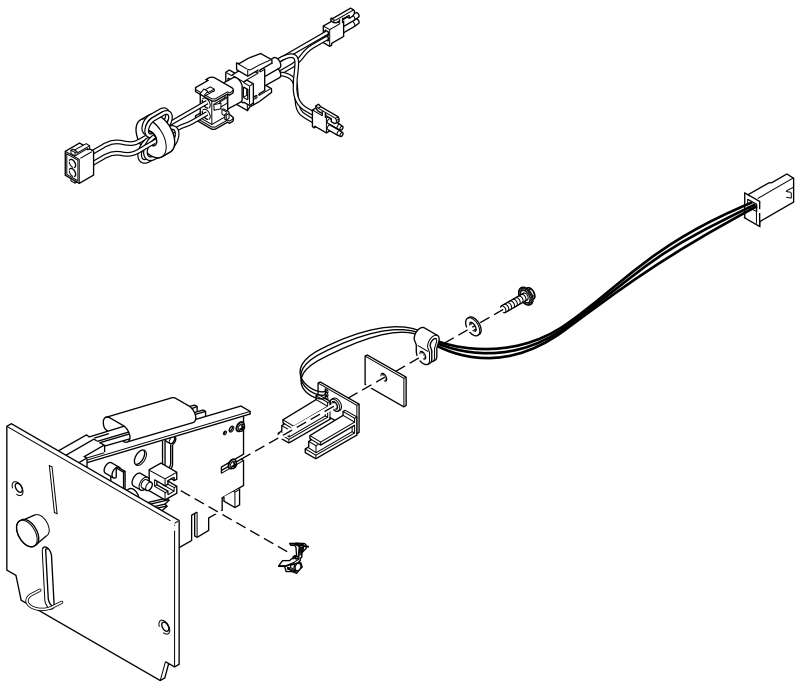

TMB2738PA_70421801

© Copyright, Alliance Laundry Systems LLC – DO NOT COPY or TRANSMIT

Coin Drop Kits

REF	PART NO.	DESCRIPTION	COMMENTS
	CK115	Electronic Coin Drop Kit	USA and Canada
	CK099	Electronic Coin Drop Kit	Australia (default), New Zealand, Hong Kong, South Korea and Malaysia
	CK100	Electronic Coin Drop Kit	United Kingdom (default), and Europe
	CK101	Electronic Coin Drop Kit	Euro (default), Denmark and Norway
	CK103	Electronic Coin Drop Kit	Lithuania (default), Latvia and Europe
	CK125	Electronic Coin Drop Kit	South Africa
	CK109	Electronic Coin Drop Kit	Euro
	CK113	Electronic Coin Drop Kit	Japan and Taiwan
	CK116	Electronic Coin Drop Kit	Malaysia (default) and China
	CK117	Electronic Coin Drop Kit	Russia
	CK118	Electronic Coin Drop Kit	Philippine
	CK119	Electronic Coin Drop Kit	Thailand
	CK120	Electronic Coin Drop Kit	Chile
	CK121	Electronic Coin Drop Kit	Singapore
	CK122	Coin Drop Kit	New Zealand; 1.00 and 2.00

© Copyright, Alliance Laundry Systems LLC – DO NOT COPY or TRANSMIT

Coin Drop Components for Quantum Control

M and S Models Except SR050E and SR050S

Models with LB, LC, LK, LL, LW, LX, WB, WC, WK, WL, WW and WX Control Suffixes

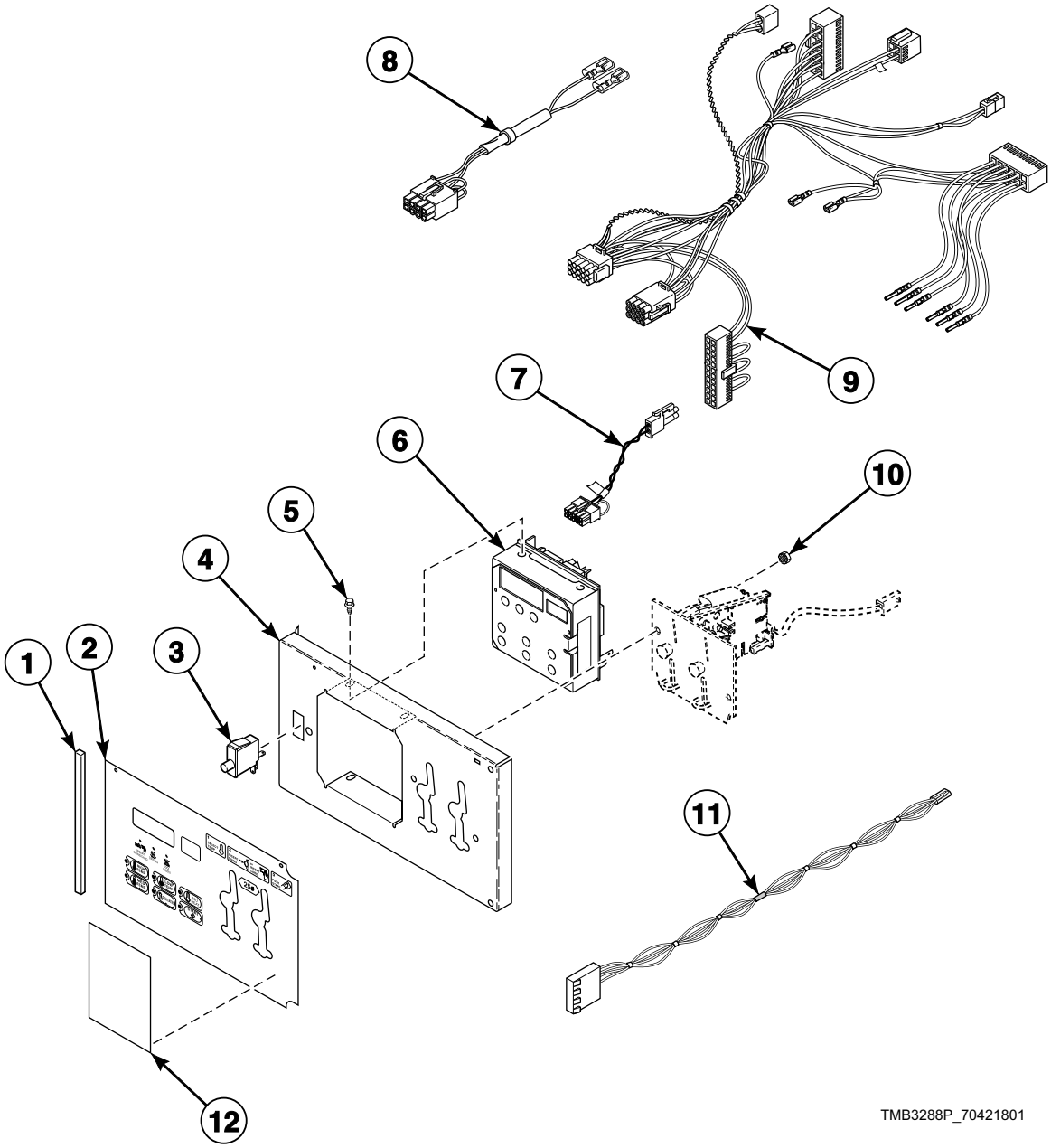

© Copyright, Alliance Laundry Systems LLC – DO NOT COPY or TRANSMIT

Coin Drop Components for Quantum Control

REF	PART NO.	DESCRIPTION	COMMENTS
	NK208	Network Retrofit Kit	LC and LX control suffixes; Wired
	NK220	Network Controller Kit	LC and LX control suffixes; Wired
	NK301	Wireless Network Kit	LC and LX control suffixes; Wireless
	NK320	Ethernet Gateway Kit	LC and LX control suffixes; Wireless
	NK330	USB Gateway Kit	LC and LX control suffixes; Wireless
	203346	USB IR Interface Kit	
1	70414101	Foam Gasket	
2	44194801	Control Overlay	Model ST050D
	70449501	Control Overlay	Model ST050D; M models
	70410001	Control Overlay	All models except M models and ST050D; Single drop
	70410002	Control Overlay	All models except M models and ST050D; Dual drop
3	70413301	Pushbutton Switch	
4	70291001P	Control Plate Kit	
5	D501524	Screw	4 required for mounting control
6	70450501P	Control Assembly	Nonreversing
	70450503	Control Assembly	Reversing
7	70324604	Jumper Calibration Wire	
8	70364104P	Coin Vault Switch Harness	Non-CE models
9	70410401P	Control Panel Harness	
10	29786	Nut	2 required
11	70484601	Central Pay Harness	LK, LL, WK and WL control suffixes
12	39564	Nameplate	LK, LL, WK and WL control suffixes; Cover

© Copyright, Alliance Laundry Systems LLC – DO NOT COPY or TRANSMIT

Card Reader Components for Quantum Control

M and S Models Except SR050E and SR050S
Models with LY, LZ, WY and WZ Control Suffixes

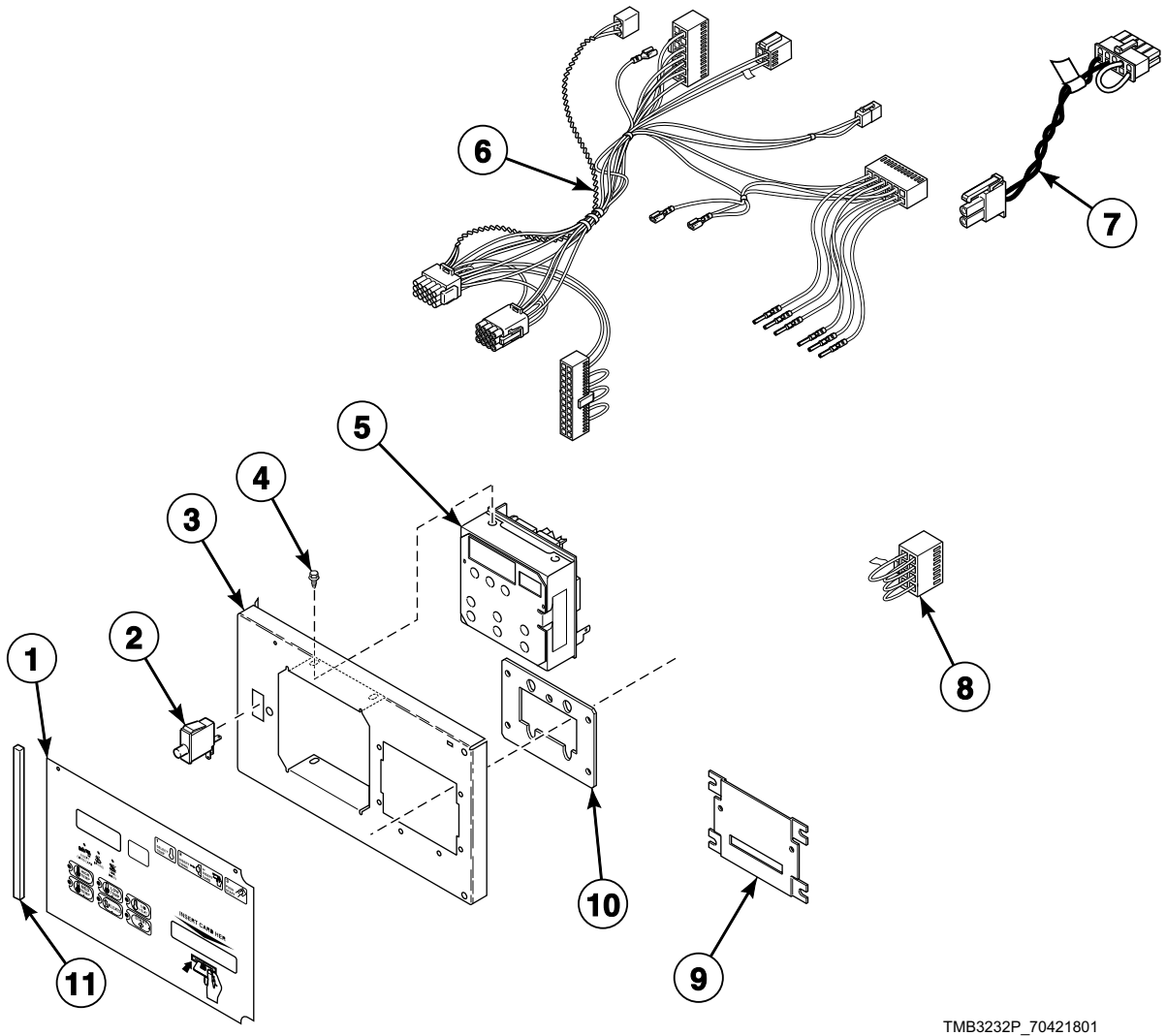

© Copyright, Alliance Laundry Systems LLC – DO NOT COPY or TRANSMIT

Card Reader Components for Quantum Control

REF	PART NO.	DESCRIPTION	COMMENTS
	NK208	Network Retrofit Kit	LY control suffix; Wired
	NK220	Network Controller Kit	LY control suffix; Wired
	NK301	Wireless Network Kit	LY control suffix; Wireless
	NK320	Ethernet Gateway Kit	LY control suffix; Wireless
	NK330	USB Gateway Kit	LY control suffix; Wireless
	203346	USB IR Interface Kit	
1	70410003	Overlay	
2	70413301	Pushbutton Switch	
3	70497201	Control Plate Assembly	
4	D501524	Screw	4 required
5	70450501P	Control Assembly	Nonreversing
	70450503	Control Assembly	Reversing
6	70410401P	Control Panel Harness	
7	70324604	Jumper Calibration Wire	
8	70364103	Bypass Harness	Non-CE models
9	44089501	Slot Card Plate Assembly	
10	70208801	Mounting Plate	
11	70414101	Foam Gasket	

© Copyright, Alliance Laundry Systems LLC – DO NOT COPY or TRANSMIT

Network Board

H, M and S Models Except HR050E, HR050S, SR050E and SR050S
Models with WB, WC, WW, WX, WY, WZ, ZB, ZC, ZW, ZX, ZY and ZZ Control Suffixes

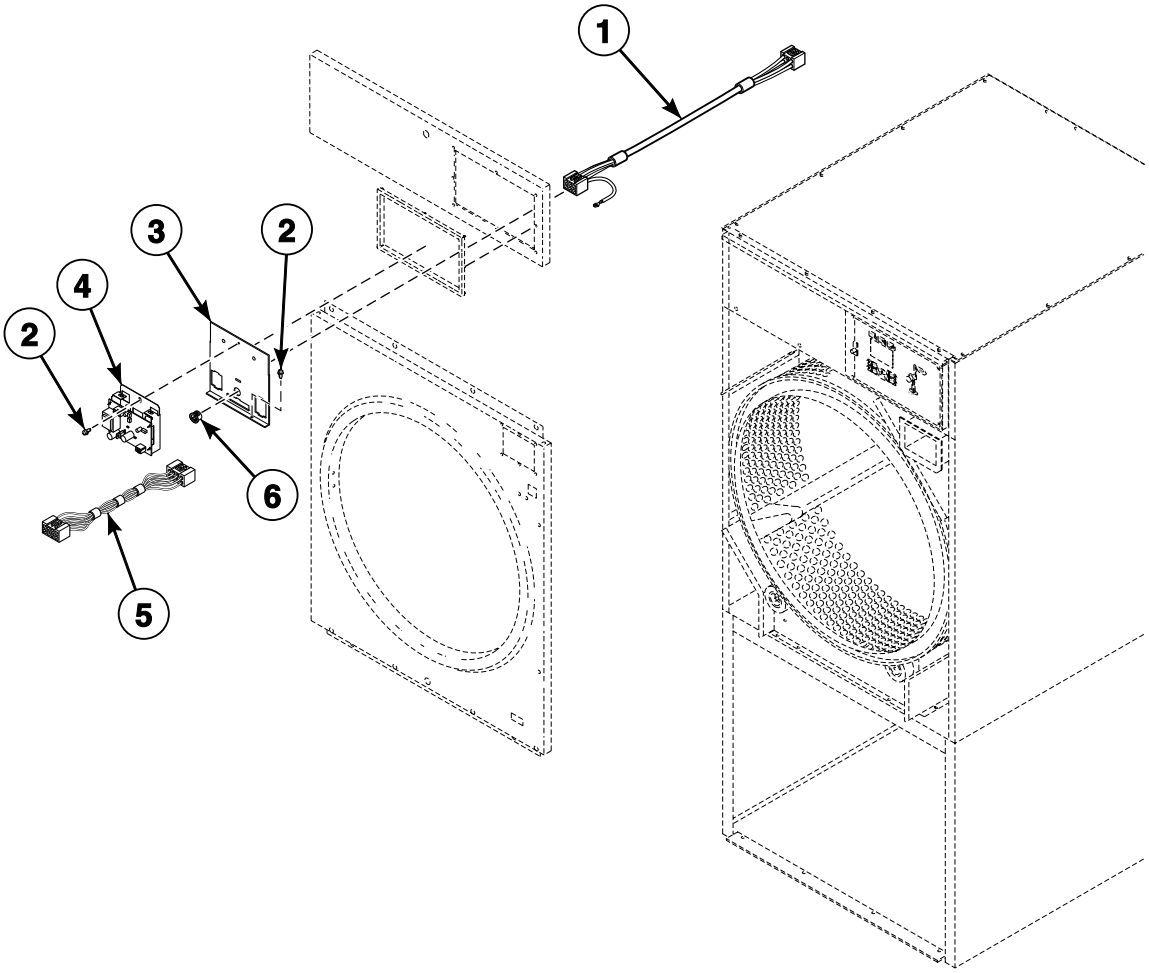

TMB2954P_70421801

© Copyright, Alliance Laundry Systems LLC – DO NOT COPY or TRANSMIT

Network Board

REF	PART NO.	DESCRIPTION	COMMENTS
	800246	Communication Wire Harness Assembly	Wired; M and S models
1	44141801P	Network Harness	Wired; M and S models
2	430497	Screw	Wired; M and S models
	D503661	Screw	Wireless
3	70307002	Control Housing Cover	
4	201341	Network Board Assembly	Wired; M and S models
	202335	Wireless Transceiver Assembly	Wireless
5	44088501P	Network Wire Harness Assembly	
6	M400770	Snap Bushing	

© Copyright, Alliance Laundry Systems LLC – DO NOT COPY or TRANSMIT

Network Connection for Quantum

M and S Models Except SR050E and SR050S
Models with WC, WX and WY Control Suffixes

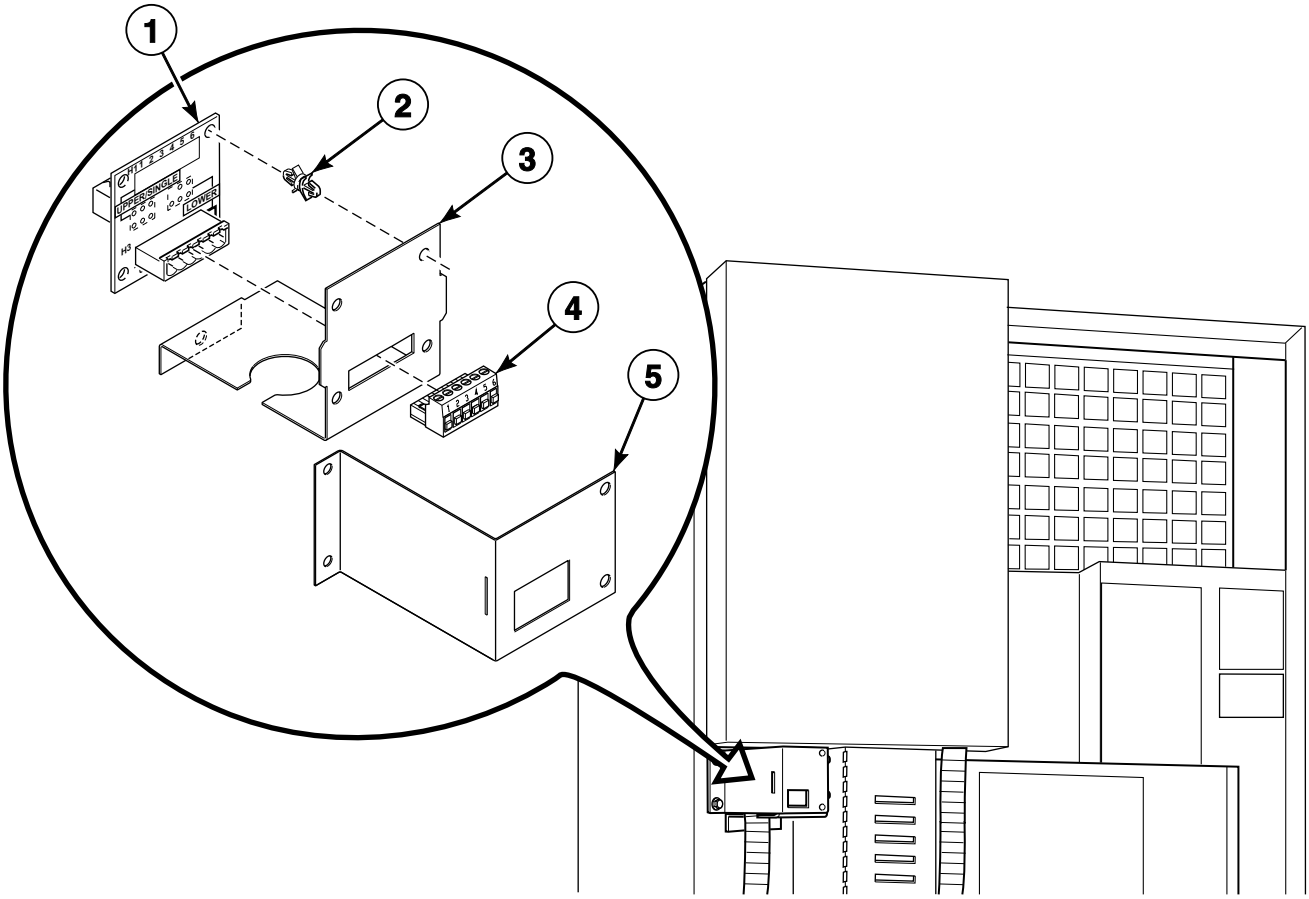

TMB2955P_70421801

© Copyright, Alliance Laundry Systems LLC – DO NOT COPY or TRANSMIT

Network Connection for Quantum

REF	PART NO.	DESCRIPTION	COMMENTS
	201341	Network Board Assembly	
	210157P	Network Board	For desktop PC
	210165	Network Cable	For laptop PC
	210016P	Network Board Assembly	
	210097	Communication Board	
	D505905P	Control Kit	
1	210095P	Communication Board	
2	210098	PC Board Standoff	4 required
3	44143601	Network Board Bracket	
4	210099	Communication Connector	
5	44143701	Network Board Cover	

© Copyright, Alliance Laundry Systems LLC – DO NOT COPY or TRANSMIT

Coin Drop Components for Galaxy 600 Control

H Models Except HR050E and HR050S

Models with KB, KC, KK, KL, KW, KX, ZB, ZC, ZK, ZL, ZW and ZX Control Suffixes

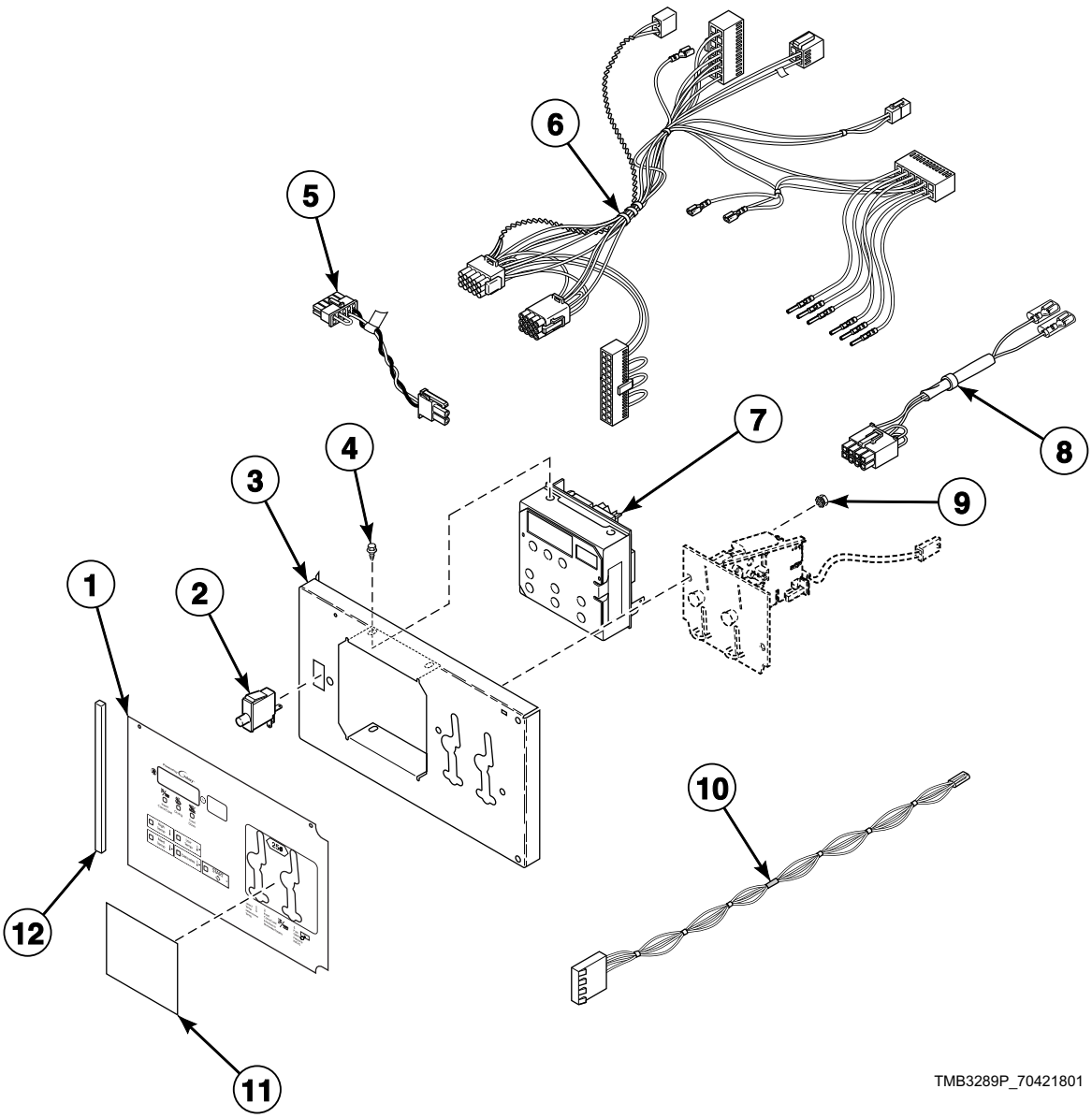

© Copyright, Alliance Laundry Systems LLC – DO NOT COPY or TRANSMIT

Coin Drop Components for Galaxy 600 Control

REF	PART NO.	DESCRIPTION	COMMENTS
	NK301	Wireless Network Kit	ZC and ZX control suffixes; Wireless
	NK320	Ethernet Gateway Kit	ZC and ZX control suffixes; Wireless
	203346	USB IR Interface Kit	
1	70473001	Control Overlay	Single drop; Gray
	70473002	Control Overlay	Dual drop; Gray
	70504501	Overlay	Single drop; Gray/green
	70504502	Overlay	Dual drop; Gray/green
	70504601	Overlay	Single drop; Green
	70504602	Overlay	Dual drop; Green
2	70413301	Pushbutton Switch	
3	70291001P	Control Plate Kit	
4	D501524	Screw	For mounting item 7
5	70324604	Jumper Calibration Wire	
6	70410401P	Control Panel Harness	
7	70450502P	Control Assembly	Nonreversing
	70450504	Control Assembly	Reversing
8	70364104P	Coin Vault Switch Harness	Non-CE models
9	70054	Nut	
10	70484601	Central Pay Harness	KK, KL, ZK and ZL control suffixes
11	70246301	Coin Cover Overlay	KK, KL, ZK and ZL control suffixes; Cover
12	70414101	Foam Gasket	6 inches required; Mounts to front of overlay, even with edge

© Copyright, Alliance Laundry Systems LLC – DO NOT COPY or TRANSMIT

Card Reader Components for Galaxy 600 Control

H Models Except HR050E and HR050S
Models with KY, KZ, ZY and ZZ Control Suffixes

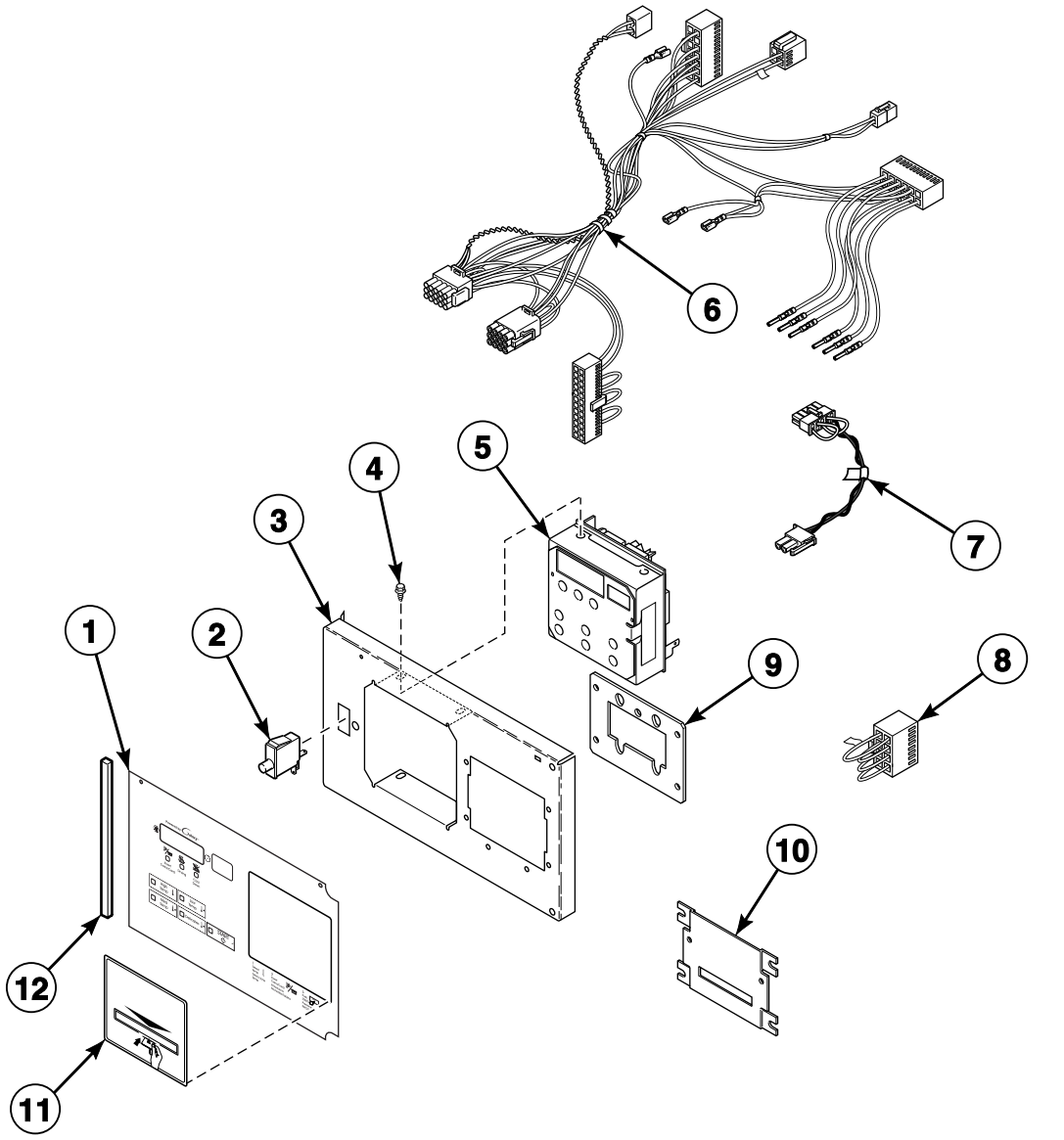

TMB3233P_70421801

© Copyright, Alliance Laundry Systems LLC – DO NOT COPY or TRANSMIT

Card Reader Components for Galaxy 600 Control

REF	PART NO.	DESCRIPTION	COMMENTS
	NK301	Wireless Network Kit	ZY control suffix; Wireless
	NK320	Ethernet Gateway Kit	ZY control suffix; Wireless
	203346	USB IR Interface Kit	
1	70473003	Control Overlay	Gray
	70504503	Overlay	Gray/green
	70504603	Overlay	Green
2	70413301	Pushbutton Switch	
3	70497201	Control Plate Assembly	
4	D501524	Screw	
5	70450502P	Control Assembly	Nonreversing
	70450504	Control Assembly	Reversing
6	70410401P	Control Panel Harness	
7	70324604	Jumper Calibration Wire	
8	70364103	Bypass Harness	Non-CE models
9	70208801	Mounting Plate	
10	44089501	Slot Card Plate Assembly	
11	70334301	Card Reader Overlay	
12	70414101	Foam Gasket	6 inches required; Mounts to front of overlay, even with edge

© Copyright, Alliance Laundry Systems LLC – DO NOT COPY or TRANSMIT

UniLinc Control

U Models Except UR050E and UR050S
Models with RU and UO Control Suffixes

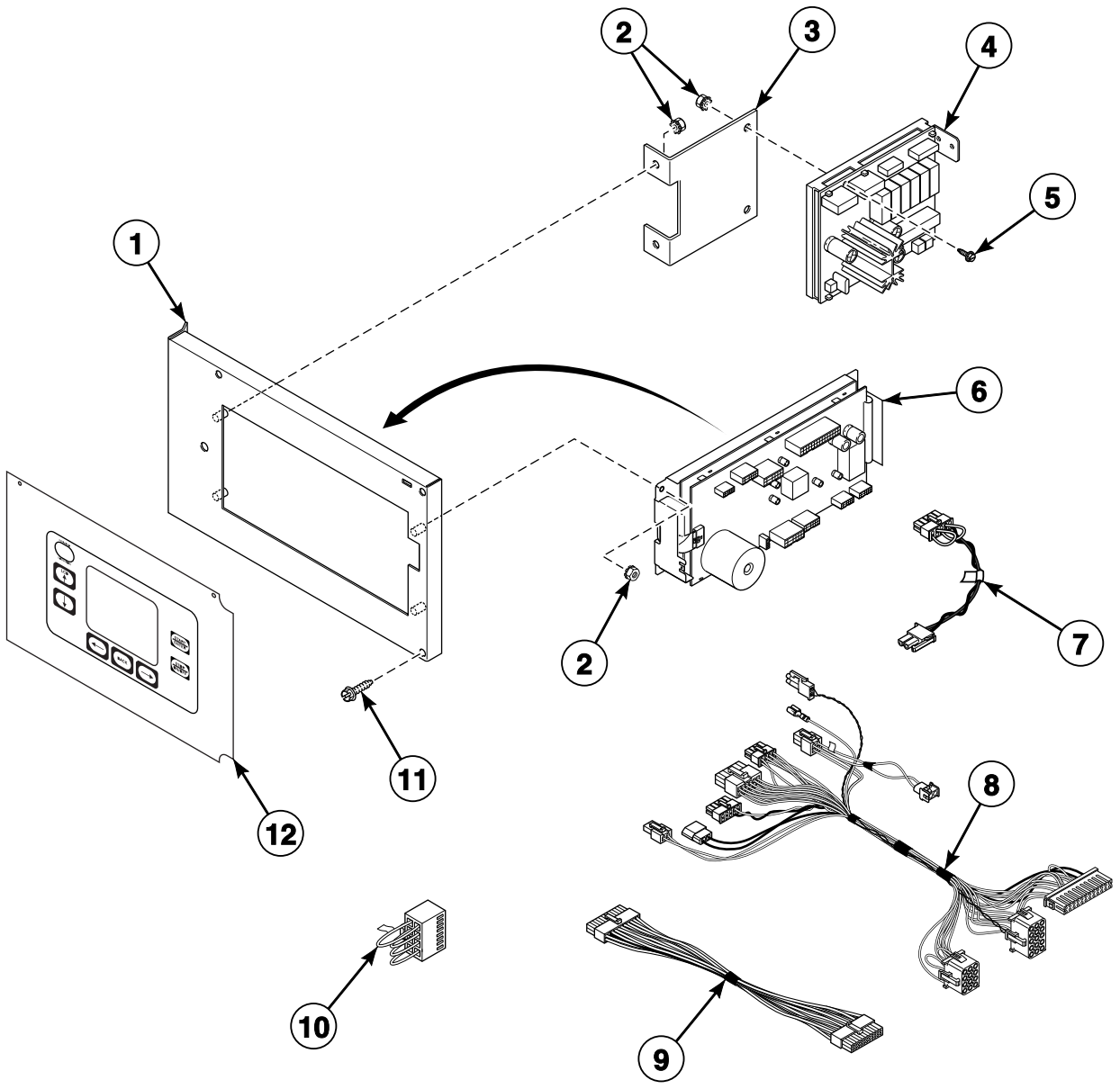

TMB3259P_70421801

© Copyright, Alliance Laundry Systems LLC – DO NOT COPY or TRANSMIT

UniLinc Control

REF	PART NO.	DESCRIPTION	COMMENTS
	NK208	Network Retrofit Kit	Wired
	NK220	Network Controller Kit	Wired
	NK301	Wireless Network Kit	Wireless
	NK320	Ethernet Gateway Kit	Wireless
	NK330	USB Gateway Kit	Wireless
	203346	USB IR Interface Kit	
1	70475601	Control Plate Assembly	
2	70054	Nut	
3	70440601	Output Bracket	
4	70434101P	Control Assembly	
5	D501524	Screw	
6	70454001P	Control Assembly	
7	70324604	Jumper Calibration Wire	
8	44240301	Control Panel Harness	Goes from item 6 to main harness
9	44186101	Output Harness	Use between item 4 and item 6
10	70364103	Bypass Harness	Non-CE models
11	70069901	Screw	
12	70432201	Overlay	Models through 8/17/14
	70499001	Overlay	Models starting 8/18/14

© Copyright, Alliance Laundry Systems LLC – DO NOT COPY or TRANSMIT

LED OPL Control

B, C, H, I, N, S and U Models Except Models with 2nd Digit R
G, K, L, P and Y Models Starting 1/16/12
Models with EO and RE Control Suffixes

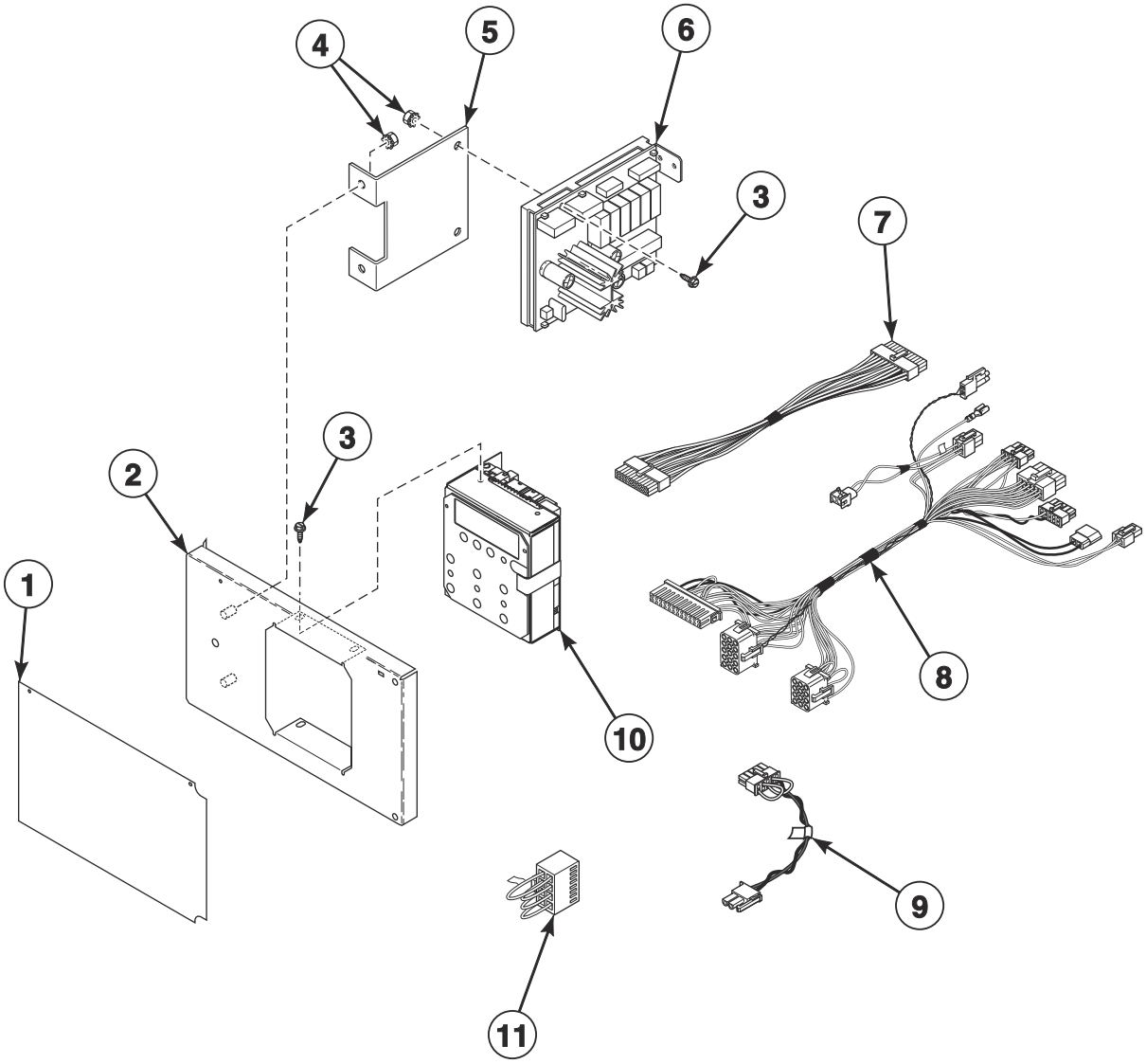

TMB3260P_70421801

© Copyright, Alliance Laundry Systems LLC – DO NOT COPY or TRANSMIT

LED OPL Control

REF	PART NO.	DESCRIPTION	COMMENTS
	203346	USB IR Interface Kit	
1	70445001	Overlay	S models; EO control suffix
	70445002	Overlay	S models; RE control suffix
	70445003	Overlay	H models; EO control suffix
	70445004	Overlay	H models; RE control suffix
	70462402	Overlay	B, C and I models through 7/14/14; EO control suffix
	70462401	Overlay	B, C and I models through 7/14/14; RE control suffix
	70504902	Overlay	B, C and I models starting 7/15/14; EO control suffix
	70504901	Overlay	B, C and I models starting 7/15/14; RE control suffix
	70462701	Overlay	U models; Models through 8/17/14; RE control suffix
	70493702	Overlay	U models; EO control suffix
	70493701	Overlay	U models; Models starting 8/18/14; RE control suffix
	70462902	Overlay	G and K models; EO control suffix
	70462901	Overlay	G and K models; RE control suffix
	70472402	Overlay	P models; Models through 9/30/14; EO control suffix
	70472401	Overlay	P models; Models through 9/30/14; RE control suffix
	70508602	Overlay	P models starting 10/1/14 through 5/31/15; L models starting 1/29/15 through 5/31/15; EO control suffix
	70508601	Overlay	P models starting 10/1/14 through 5/31/15; L models starting 1/29/15 through 5/31/15; RE control suffix
	70472202	Overlay	N and Y models; L models through 1/28/15; EO control suffix
	70472201	Overlay	N and Y models; L models through 1/28/15; RE control suffix
	70526002	Overlay	L and P models starting 6/1/15; EO control suffix
	70526001	Overlay	L and P models starting 6/1/15; RE control suffix
2	70440901	Control Plate and Studs Assembly	
3	D501524	Screw	
4	70054	Nut	
5	44223101	Output Bracket	
6	70434101P	Control Assembly	
7	44186101	Output Harness	Use between item 5 and item 8
8	44240301	Control Panel Harness	Goes from item 8 to main harness
9	70324604	Jumper Calibration Wire	
10	70454101P	Control Assembly	H, S and U models; L and P models starting 6/1/15
	70437102P	Control Assembly	B, C and I models through 7/14/14
	70503702P	Control Assembly	B, C and I models starting 7/15/14
	70437103P	Control Assembly	P models through 5/31/15; L models starting 1/29/15 through 5/31/15
	70437104P	Control Assembly	G and K models
	70437105P	Control Assembly	N and Y models; L models through 1/28/15
11	70364103	Bypass Harness	Non-CE models

© Copyright, Alliance Laundry Systems LLC – DO NOT COPY or TRANSMIT

Emergency Stop Button - CE Models

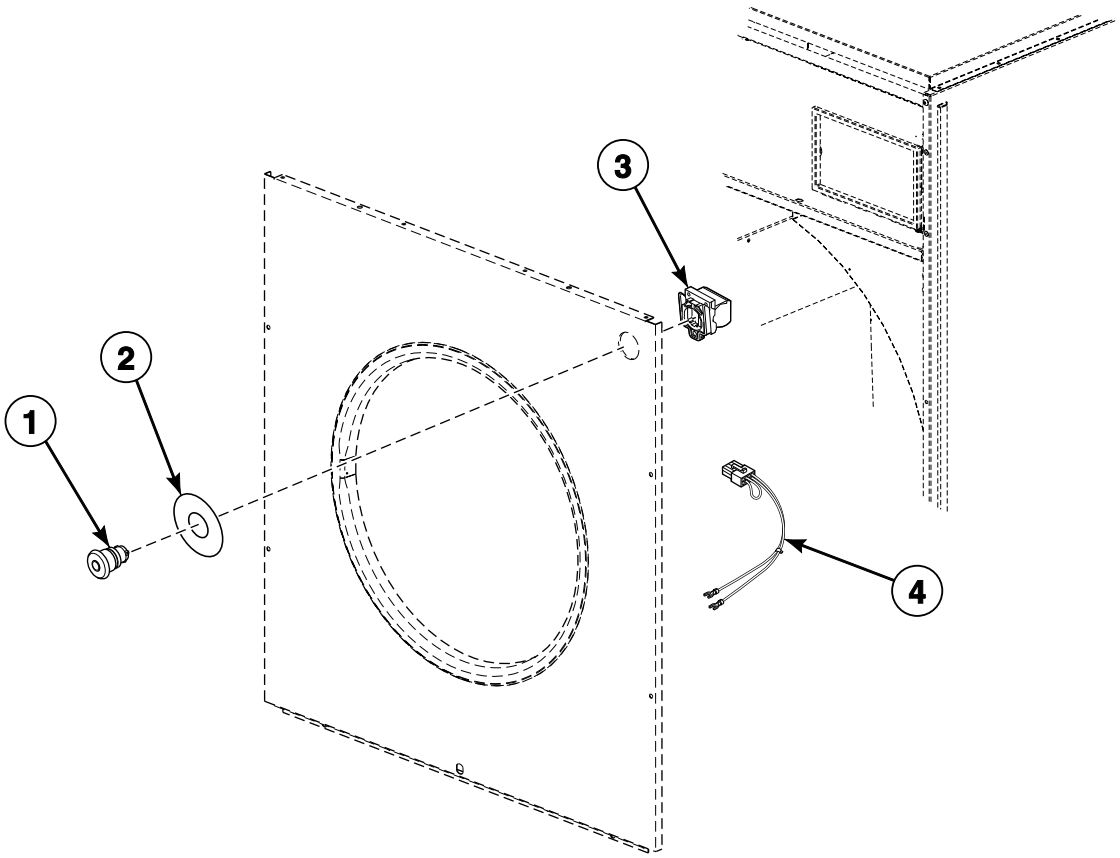

TMB2386P_70421801

© Copyright, Alliance Laundry Systems LLC – DO NOT COPY or TRANSMIT

Emergency Stop Button - CE Models

REF	PART NO.	DESCRIPTION	COMMENTS
1	F200233500	Emergency Stop Pushbutton	
2	44012901	Emergency Stop Label	
3	F200233401P	Contact Block Switch	Models through 8/17/14
	F8069501	Contact Switch	Models starting 8/18/14
	F8538101	Contact Base	Models starting 8/18/14
4	70364105P	Emergency Stop Contact Harness	1 contact
	70364106P	Emergency Stop Harness	2 contacts

© Copyright, Alliance Laundry Systems LLC – DO NOT COPY or TRANSMIT

Cabinet Front Components

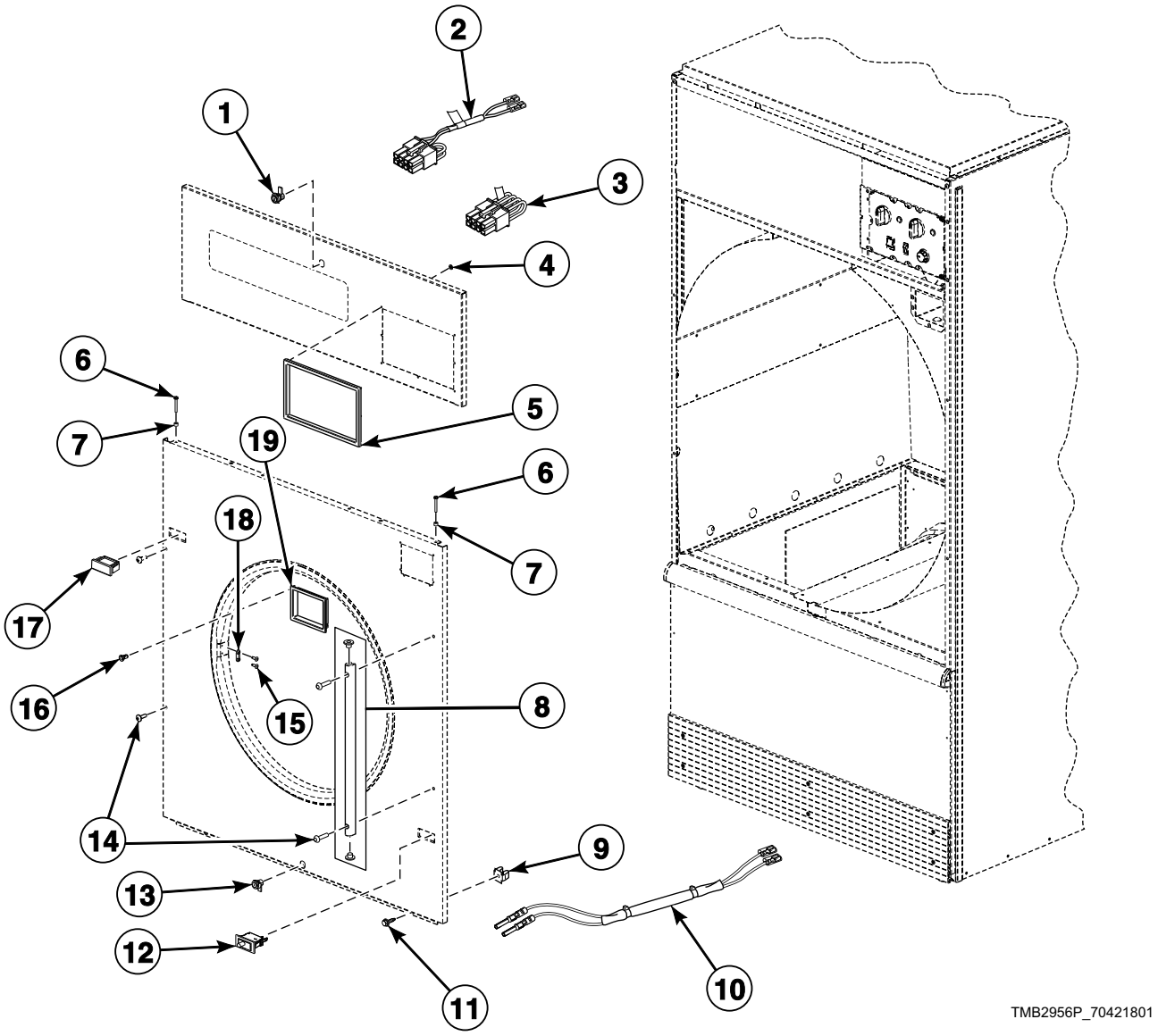

© Copyright, Alliance Laundry Systems LLC – DO NOT COPY or TRANSMIT

Cabinet Front Components

REF	PART NO.	DESCRIPTION	COMMENTS
	M4379P4	Tumbler Dolly Kit	
1	70733701	Lock, Key and Nut Kit	RL001 key code; Control panel; Optional if same key is to be used for control lock
	70155601	Key	RL001
2	70364104P	Coin Vault Switch Harness	Coin
3	70364103	Bypass Harness	OPL
4	M400977	Nut	8 required per control trim
5	70529402	Control Trim	H models; Light gray (tan)
	70529401	Control Trim	H models; Gray
	44016401	Control Trim	G, K, L, M, N, P, S and Y models; U models through 8/17/14; Black
6	70275801	Screw	4 required
7	56079	Panel Locator	2 required
8	44035001	Door Hinge Lug Assembly	C, H, L, M, N, P, S, U and Y models; B and I models through 7/31/11
	44035002	Door Hinge Lug Assembly	G and K models; B and I models starting 8/1/11; Black
9	70030501	Expansion Clip	
10	44137601	Door Switch Harness	
11	M411072	Screw	4 required; Front panel; Bottom
12	70413301	Pushbutton Switch	Door switch
13	70733701	Lock, Key and Nut Kit	RL001 key code; Lint panel; Optional if same key is to be used for control lock
	70155601	Key	RL001
	70722301	Lock, Key and Nut Kit	RL002 key code; Lint panel; Standard coin and card models
	70155602	Key	RL002
14	70033502	Screw	4 required for painted panels; 2 required for stainless steel panels in addition to 2 of 70182601 Screw
	70182601	Screw	2 required for stainless steel panels in addition to 2 of 70033502 Screw
15	M400003	Pop Rivet	
16	M400972	Shadow Box Clip	6 required
17	44057801W	Switch Hole Plug	White
	44057801Q	Switch Hole Plug	Bisque
	44057801B	Switch Hole Plug	Black; For stainless steel
	44057801LG	Switch Hole Plug	U models starting 8/18/14; P models starting 10/24/14; L models starting 1/28/15; Gray
18	M401223	Door Latch	
19	70117501	Coin Vault Trim	H models; Light gray (tan)
	70117504	Coin Vault Trim	H models; Gray
	70117502	Coin Vault Trim	G, K, L, M, N, P, S and Y models; Black

© Copyright, Alliance Laundry Systems LLC – DO NOT COPY or TRANSMIT

Cabinet Panels and Nameplates

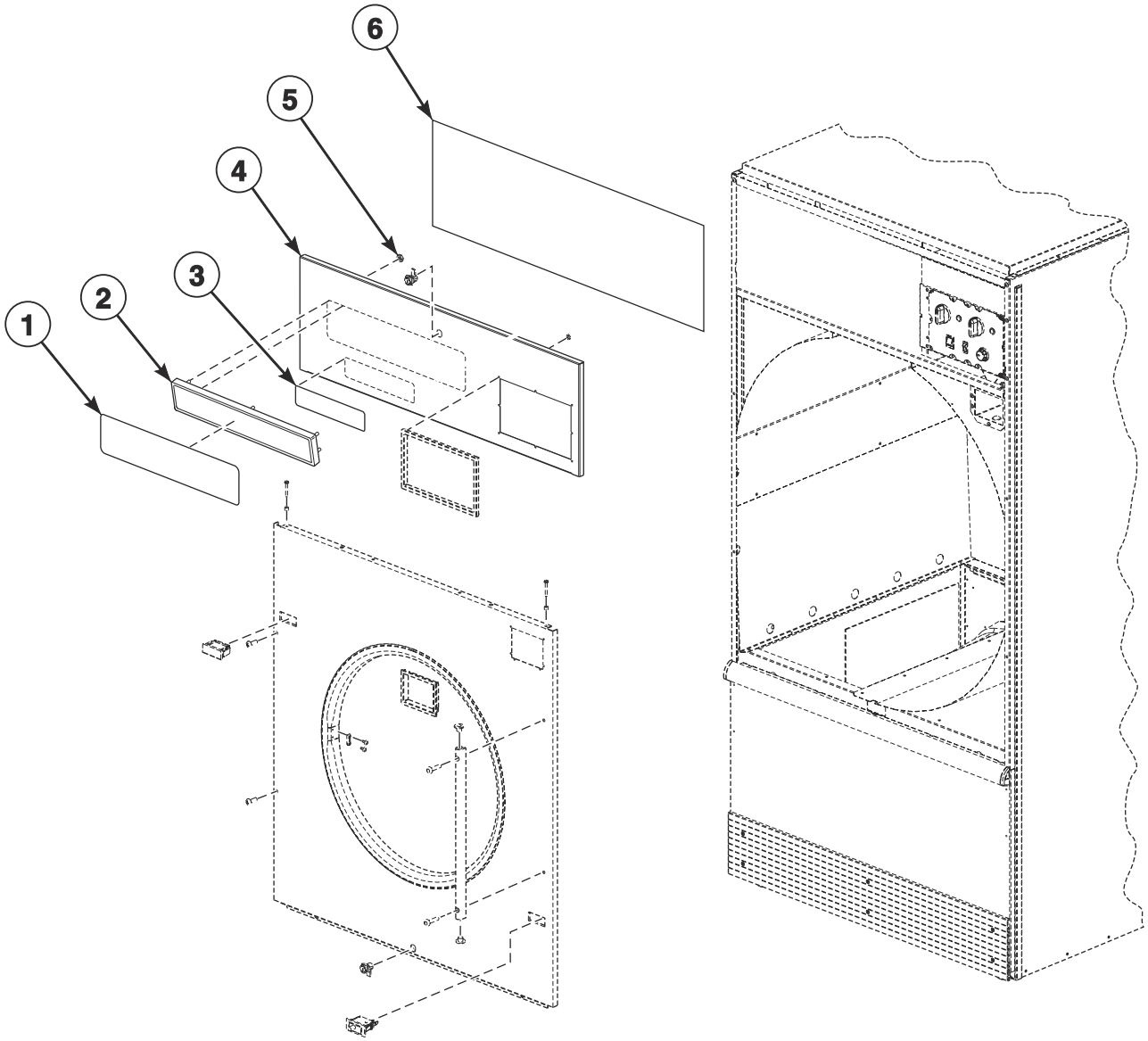

TMB3318P_70421801

© Copyright, Alliance Laundry Systems LLC – DO NOT COPY or TRANSMIT

Cabinet Panels and Nameplates

REF	PART NO.	DESCRIPTION	COMMENTS
	M4776P3	Control Panel and Door Hinge Kit	B and I models; To change from old look to new look
1	44010401	Nameplate	H models
	44010601	Nameplate	S models
	F8443106	Nameplate	U models; Models through 8/17/14
	F8443102	Nameplate	U models; Models starting 8/18/14
	44046801	Nameplate	B and I models; Models through 7/9/12
	B12389801	Nameplate	B and I models; Models starting 7/10/12
	44062901	Nameplate	C models
	70380701	Nameplate Overlay	P models; Models through 9/30/14
	70509601	Nameplate	P models; Models starting 10/1/14
	70243901	Nameplate	L models; Models through 3/27/15
	70522001	Nameplate	L models; Models starting 3/28/15
	70410201	Nameplate Overlay	G models; OPL
	70411401	Nameplate Overlay	G models; Coin and card
	44130301	Nameplate Overlay	K models; OPL
	44104501	Nameplate Overlay	Y models
2	70117401	Nameplate Bezel	L, P and S models
3	44129904	Nameplate	C models
4	44040015W	Control Panel	C models; B and I models through 7/31/11; 3O, 3V, 3X, QT, R3 and RQ control suffixes
	44040002	Control Panel	C models; B and I models through 7/31/11; 3O, 3V, 3X, QT, R3 and RQ control suffixes; Stainless steel
	44040003*	Control Panel	C models; I models through 7/31/11; DO, DV and RD control suffixes
	44040004	Control Panel	C models; I models through 7/31/11; DO, DV and RD control suffixes; Stainless steel
	44040007B	Control Panel	B and I models; Models starting 8/1/11 through 7/9/12
	44040008B	Control Panel	B and I models; Models starting 7/10/12
	44000117BP	Control Panel	L models; Models through 3/27/15
	44040005*	Control Panel	G and K models; U models with RU and UO control suffixes
	44040013	Control Panel	G and K models; U models through 3/31/15 with RU and UO control suffixes; Stainless steel
	44000121WP	Control Panel	S and Y models; P models through 9/30/14 and starting again 7/1/17 with white front panel; U models with all other control suffixes
	44000118P	Control Panel	H, S and Y models through 3/31/15; P models through 9/30/14; U models through 8/17/14 with all other control suffixes; Stainless steel
	44000124	Control Panel	S and Y models starting 4/1/15; P models starting 7/1/17 with white front panel; Stainless steel
	44040015LG	Control Panel	U models; Light gray
	44040014	Control Panel	U models; Stainless steel
	44040011*	Control Panel	U models; Models starting 8/18/14
	44000121DG	Control Panel	P models starting 10/1/14; L models starting 3/28/15; Dark gray
	44000122*	Control Panel	H, M and N models
	44000125	Control Panel	H and M models; Stainless steel
5	M400977	Nut	P and S models 6 required; U models starting 8/18/14 5 required
6	44020601	Insulation	Used inside access panel

*** Add Letter To Designate Color. Q - Bisque W - White**

NOTE: All front panel assemblies include M401223 Door Latch and 2 of M400003 Pop Rivet

© Copyright, Alliance Laundry Systems LLC – DO NOT COPY or TRANSMIT

Front Panel Assemblies

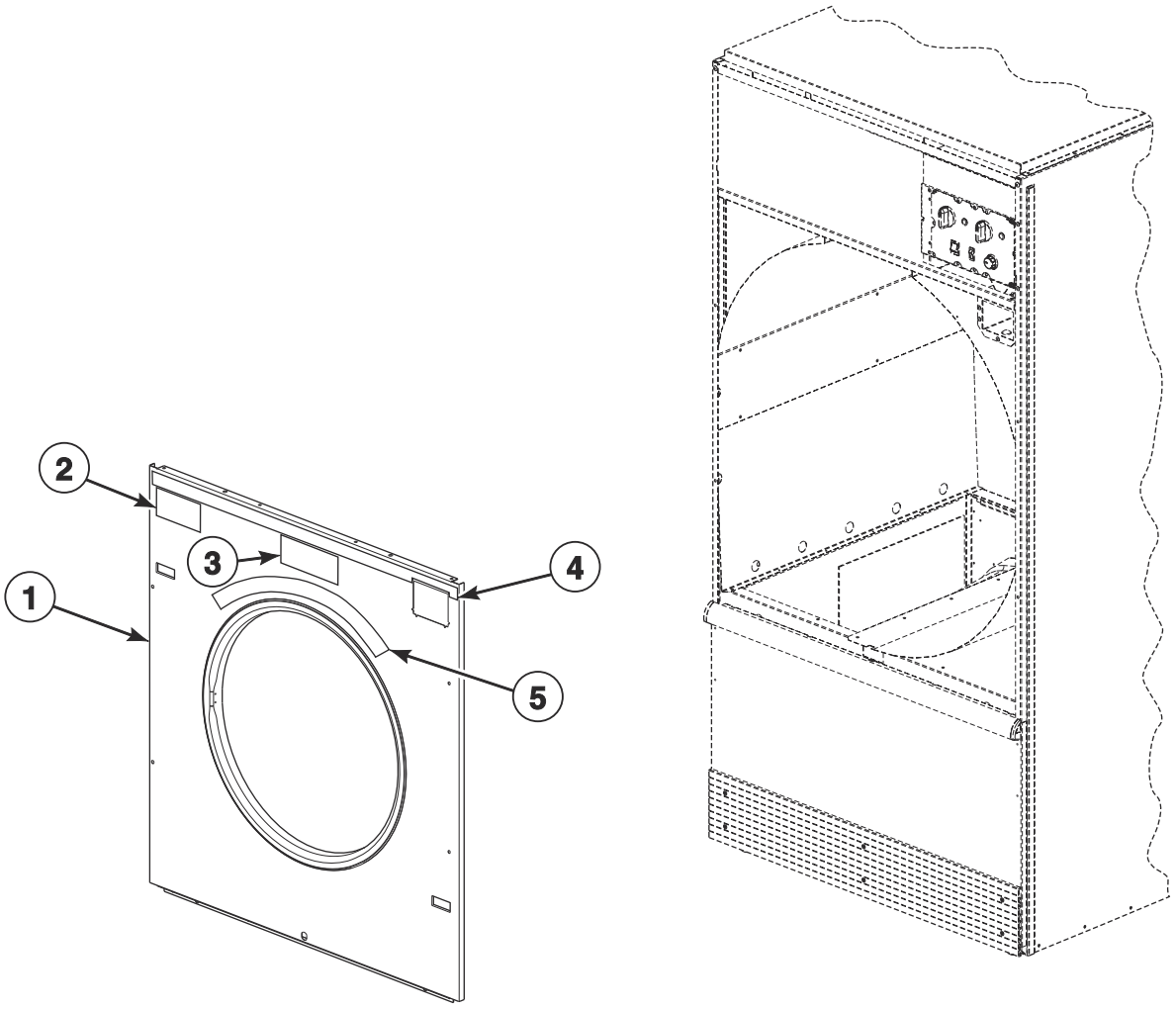

TMB3425P_70421801

© Copyright, Alliance Laundry Systems LLC – DO NOT COPY or TRANSMIT

Front Panel Assemblies

REF	PART NO.	DESCRIPTION	COMMENTS
1	44077901*P	Front Panel Assembly	P models through 9/30/14 and starting again 7/1/17; L models through 1/28/15; All other models; Coin
	44052521	Front Panel	L models through 1/28/15; All other models through 3/31/15; Coin; Stainless steel
	44077917	Front Panel Assembly	Models starting 4/1/15; Coin; Stainless steel
	44077903WP	Front Panel Assembly	P models through 9/30/14 and starting again 7/1/17; L models through 1/28/15; All other models; Card
	44077904P	Front Panel Assembly	L models through 1/28/15; All other models through 3/31/15; Card; Stainless steel
	44077918	Front Panel Assembly	Models starting 4/1/15; Card; Stainless steel
	44077905*P	Front Panel Assembly	Non-CE P models through 9/30/14 and starting again 7/1/17; Non-CE L models through 1/28/15; All other non-CE models except M models; OPL
	44077906P	Front Panel Assembly	Non-CE L models through 1/28/15; All other non-CE models except M models through 3/31/15; OPL; Stainless steel
	44077919	Front Panel Assembly	All Non-CE models except M and U models starting 4/1/15; OPL; Stainless steel
	44052517LG	Front Panel	Non-CE U models; OPL; Light gray
	44077907*P	Front Panel Assembly	CE P models through 9/30/14 and starting again 7/1/17; CE L models through 1/28/15; All other CE models; OPL
	44077908P	Front Panel Assembly	CE L models through 1/28/15; All other CE models through 3/31/15; OPL; Stainless steel
	44077920	Front Panel Assembly	All CE models except U models starting 4/1/15; OPL; Stainless steel
	44052518LG	Front Panel	CE U models; Models starting 8/18/14; OPL; Light gray
	44052517DG	Front Panel	Non-CE P models starting 10/1/14; Non-CE L models starting 1/29/15; OPL; Dark gray
	44052518DG	Front Panel	CE P models starting 10/1/14; CE L models starting 1/29/15; OPL; Dark gray
	44052519DG	Front Panel	P models starting 10/1/14; L models starting 1/29/15; Coin; Dark gray
	44052520DG	Front Panel	P models starting 10/1/14; L models starting 1/29/15; Card; Dark gray
2	70414001	Label	G and K models; Coin
3	70537101	Label	G and K models; F.S.S.
	44190901	Label	L and P models; Safe Tech
	70537001	Label	B, C, H, I, M, S and U models; C.A.R.E.
4	70399402	Access Panel Trim	G and K models
5	70534301	Warning Label	

*** Add Letter To Designate Color. Q - Bisque W - White**

NOTE: All front panel assemblies include M401223 Door Latch and 2 of M400003 Pop Rivet

© Copyright, Alliance Laundry Systems LLC – DO NOT COPY or TRANSMIT

Lint Panel Switch Assembly

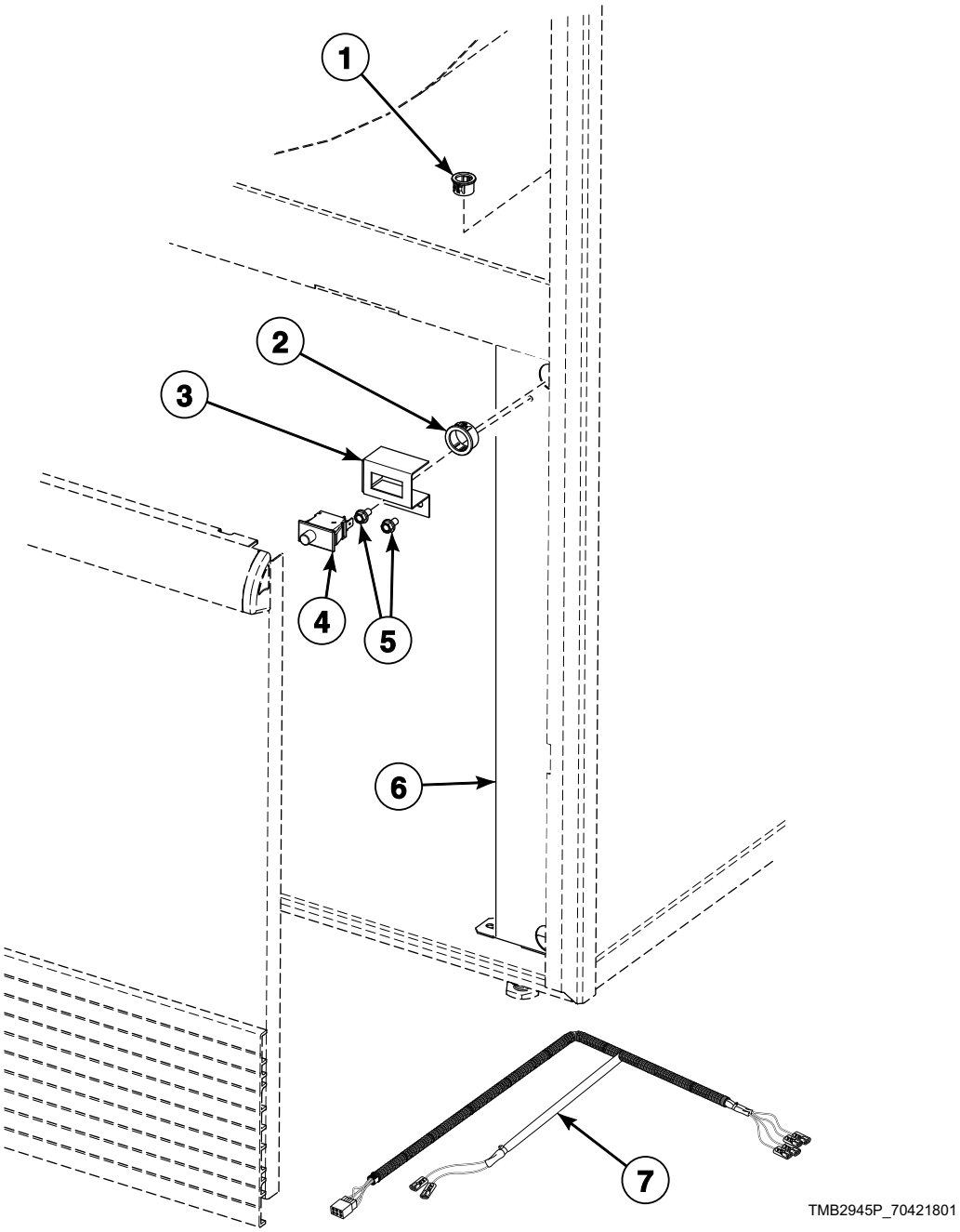

© Copyright, Alliance Laundry Systems LLC – DO NOT COPY or TRANSMIT

Lint Panel Switch Assembly

REF	PART NO.	DESCRIPTION	COMMENTS
1	M411826	Snap Bushing	
2	M400770	Snap Bushing	
3	44118601	Lint Panel Switch Bracket	
4	70413401	Switch Assembly	
5	430497	Screw	
6	44001201	Front Pillar	
7	44137501P	Base Harness Assembly	Also connects to thermistor and cabinet thermostat

© Copyright, Alliance Laundry Systems LLC – DO NOT COPY or TRANSMIT

Lower Cabinet Front Components

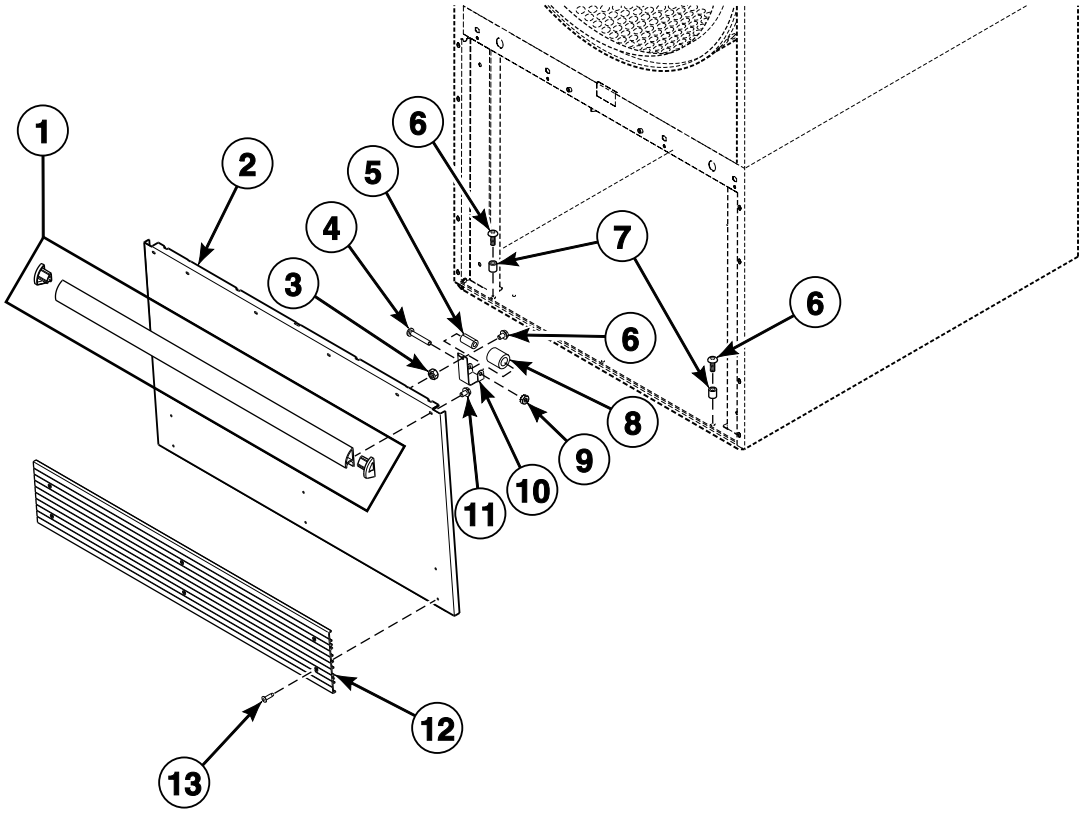

TMB2057P_70421801

© Copyright, Alliance Laundry Systems LLC – DO NOT COPY or TRANSMIT

Lower Cabinet Front Components

REF	PART NO.	DESCRIPTION	COMMENTS
	70114001	Clean Lint Compartment Sticker	Lint compartment must be cleaned daily
	70404001	Roller Bracket Assembly	Includes items 4, 5 and 8-10
1	70154405P	Handle and Caps Assembly	B, C, I, M, N, S, U and Y models; L models through 1/28/15; P models through 9/30/14 and starting again 7/1/17 with white front panel and starting 7/5/16 with stainless steel front panel; Black; Includes endcaps
	70407210	Handle Bumper	P models starting 10/1/14; L models starting 1/29/15
	70154406	Handle and Caps Assembly	H and U models; Gray; Includes endcaps
	70407202	Handle Bumper	G and K models; Black and blue; Does not include endcaps
2	44293604DG	Lint Panel	P models starting 10/1/14; L models starting 1/29/15; Dark gray; No kickplate
	44293605	Lint Panel	L and P models; B, G, H, K, S and U models starting 4/1/19; Stainless steel; No kickplate
	44293604W	Lint Panel	B, G, H, K, N, S and U models starting 4/1/19; No kickplate
	44293604LG	Lint Panel	U models starting 4/1/19; Light gray; No kickplate
	44293603W	Lint Panel	P models through 9/30/14 and starting again 7/1/17; U models through 8/17/14; L models through 1/28/15; All other models
	44000002P	Lint Panel	P models through 9/30/14; L models through 1/28/15; All other models through 3/31/15; Stainless steel
	44293602	Lint Panel	All models except L and P models starting 4/1/15; Stainless steel
	44293603LG	Lint Panel	U models; Light gray
3	51236	Nut	
4	70072801	Screw	
5	70030201	Roller Catch Spacer	
6	70132301	Screw	
7	56079	Panel Locator	U models; Models starting 8/18/14
8	70297601	Roller Catch Wheel	
9	23951	Nut	
10	70030301	Roller Catch Arm	
11	430757	Screw	4 required
12	70117608	Kickplate	H and U models; Gray
	70117607	Kickplate	All models except H models; Black
13	70126401	Pop Rivet	Gray; 6 required
	70126301	Pop Rivet	Black; 6 required

*** Add Letter To Designate Color. Q - Bisque W - White**

© Copyright, Alliance Laundry Systems LLC – DO NOT COPY or TRANSMIT

Cabinet Limit and Thermistor Assembly

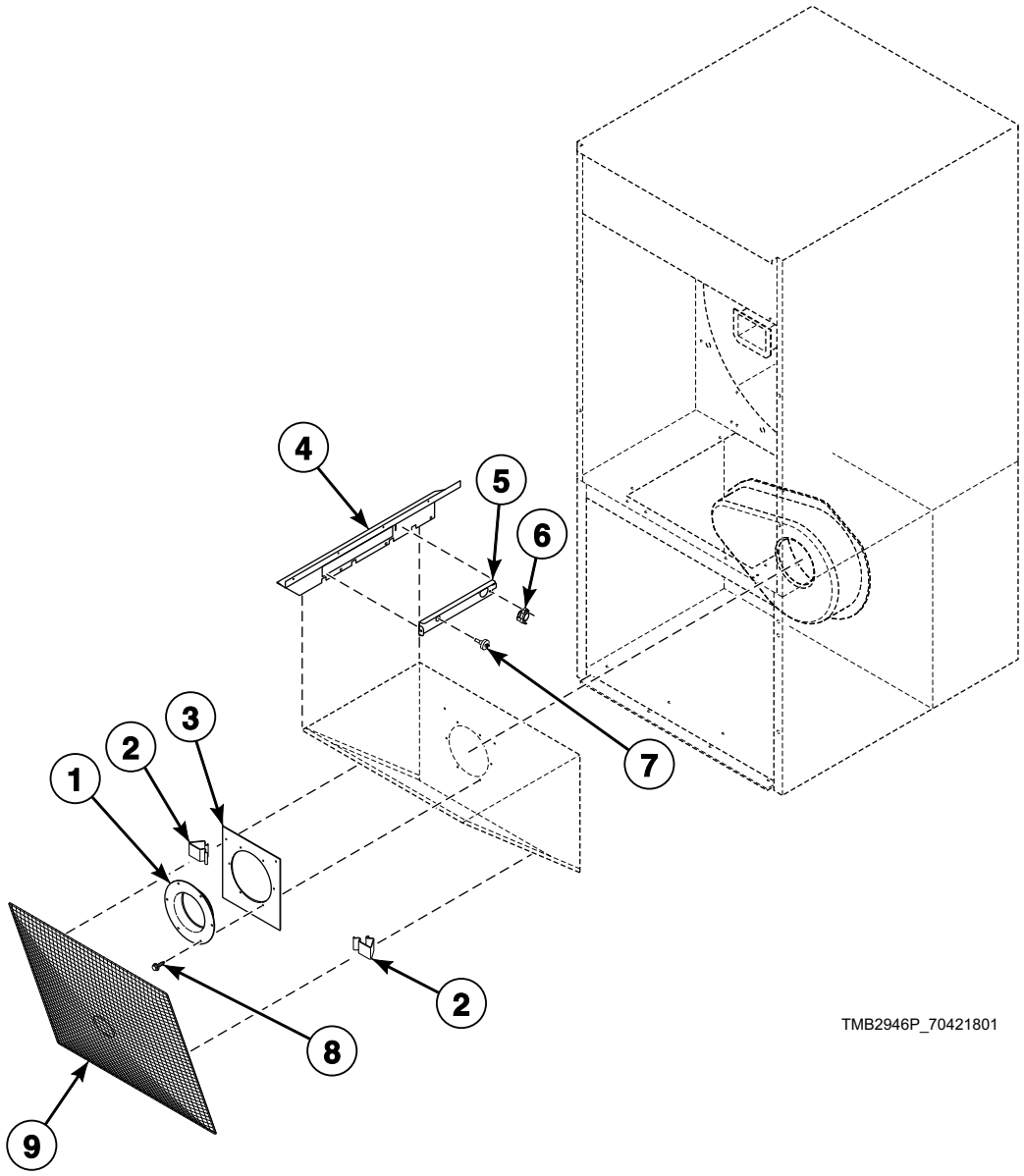

© Copyright, Alliance Laundry Systems LLC – DO NOT COPY or TRANSMIT

Cabinet Limit and Thermistor Assembly

REF	PART NO.	DESCRIPTION	COMMENTS
1	70014101	Blower Inlet Cone	Gas and steam 60 Hertz; Electric 60 Hertz/3 Phase
2	35865	Hold-Down Clip	2 required
3	44150201	Cone Plate	Gas and steam 60 Hertz; Electric 60 Hertz/3 Phase
4	44162201	Lint Screen Deflector	Use 2 70335601 Cable Ties starting Serial No. 0904004427 to hold harness
5	44162301	Deflector Cover	
6	M411813	Limit Thermostat	Electric models
	M410542	Limit Thermostat	Non-CE and non-Australian gas models and all steam models
	M411941	Manual Reset Thermostat	CE and Australian gas models
7	M414704	Thermistor	
	B12308601	Temperature Sensor Assembly	PRO HC control replacement; Refer to Parts Information Insert 8-18-251 for list of machine serial numbers
8	430497	Screw	Gas and steam 60 Hertz; Electric 60 Hertz/3 Phase; 6 required
9	44063601	Lint Screen	

© Copyright, Alliance Laundry Systems LLC – DO NOT COPY or TRANSMIT

Cabinet Components

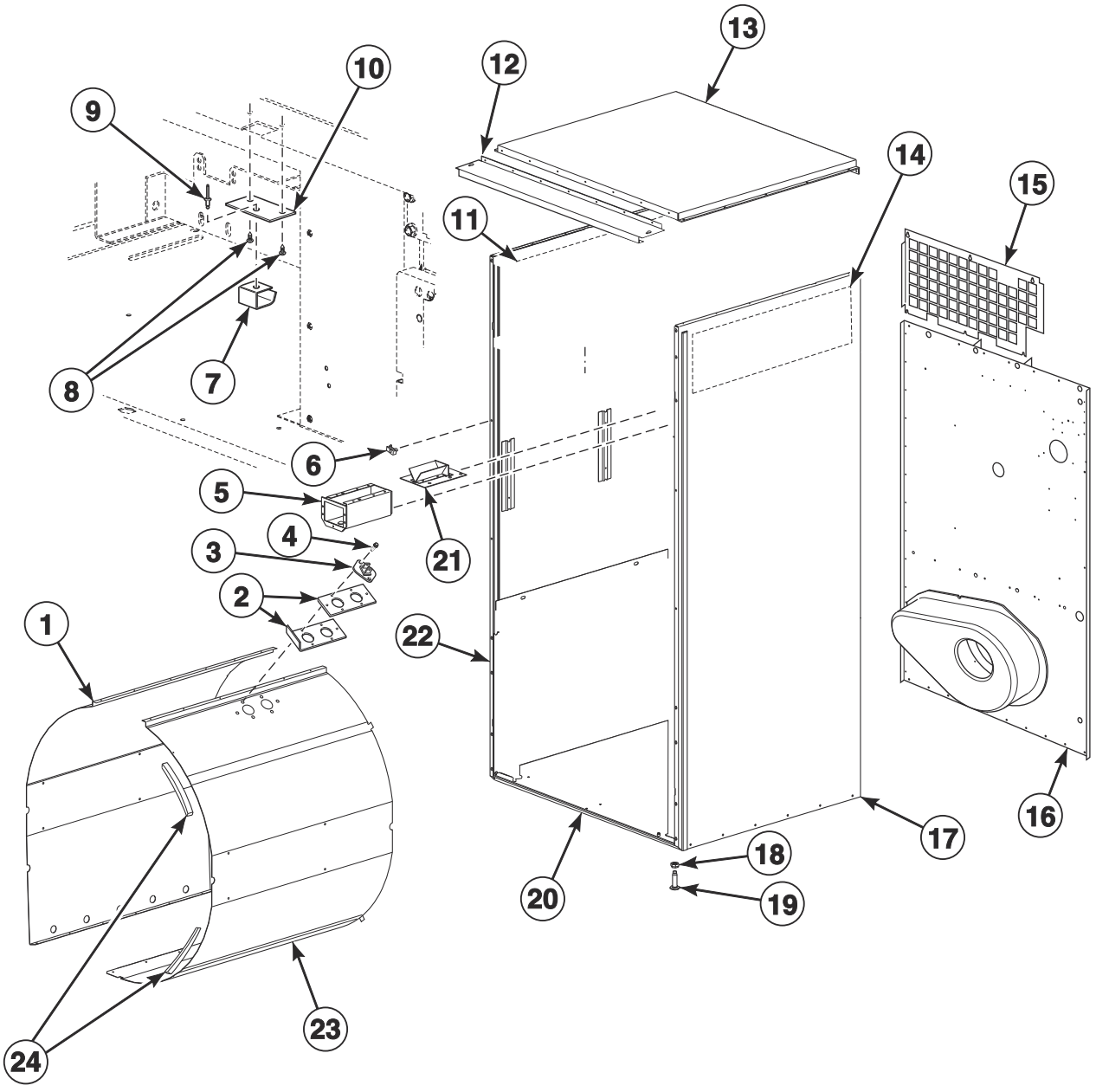

© Copyright, Alliance Laundry Systems LLC – DO NOT COPY or TRANSMIT

Cabinet Components

REF	PART NO.	DESCRIPTION	COMMENTS
	298P4P	Spray Paint	White
	122P4P	Porcelain Touch-Up Paint	White
	370P4P	Porcelain Touch-Up Paint	Bisque
	70058501	Pop Rivet	Use with items 17 and 22
	430497	Screw	Use with items 17 and 22
1	44005201	Baffle	Left
2	44068101	Thermistor Plate	
	44068102	Thermistor Plate	Use as a shim
3	44064701	Thermistor	
4	51780	Screw	
5	70180101	Coin Vault Assembly	Includes 5 of 70058502 Pop Rivet
	F160673P	Coin Box	Optional equipment; Includes lock and key
6	70030401	Nut	U-clip
7	431318	Control Door Latch	
8	431287	Screw	
9	M400003	Pop Rivet	
10	44003201	Latch Mounting Bracket	
11	44150102	Insulation	
12	44368201	Top Panel Bracket	Gas and electric models
13	44135001P	Top Cover Pan	Gas and electric models
	44139301	Top Cover	Steam models
14	44150103	Insulation	
15	44176201	Top Rear Panel	Gas and electric models
	44170501	Top Rear Panel	Electric models
16	44170401P	Rear Panel Assembly	
	N/A	Rear Panel Assembly	Bolt on angle option
17	44056701DG	Side Panel and Bracket Assembly	P models; Models starting 10/1/14; Right; Dark gray
	44056701*	Side Panel	P models through 9/30/14; All other models; Right
	44056701LG	Side Panel and Bracket Assembly	U models; Right; Light gray
18	21899	Nut	Right
19	70247701	Screw	Leveling leg
20	44000601P	Bottom Pan	
21	70296401	Coin Chute Assembly	Wide; Includes 6 of 70058502 Pop Rivet
22	44056801DG	Side Panel and Bracket Assembly	P models; Models starting 10/1/14; Left; Dark gray
	44056801*	Side Panel and Bracket Assembly	P models through 9/30/14; All other models; Left
	44056801LG	Side Panel and Bracket Assembly	U models; Left; Light gray
23	44004901	Baffle	Right
	44065501	Baffle	Right; Models equipped with fire suppression system
24	70015701	Baffle Gasket	

*** Add Letter To Designate Color. Q - Bisque W - White**

N/A = Part no longer available

© Copyright, Alliance Laundry Systems LLC – DO NOT COPY or TRANSMIT

Door Components

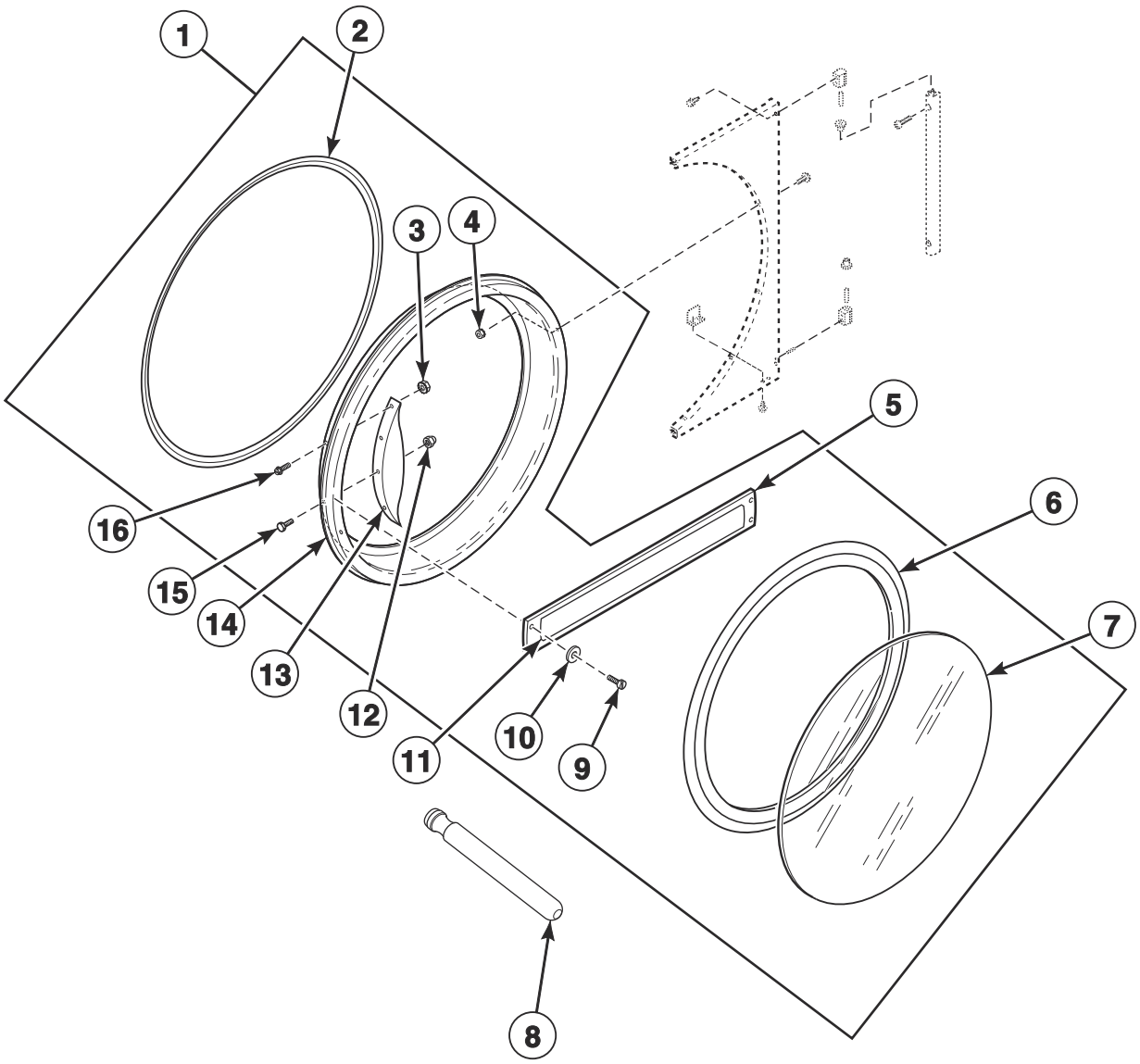

TMB3091P_70421801

© Copyright, Alliance Laundry Systems LLC – DO NOT COPY or TRANSMIT

Door Components

REF	PART NO.	DESCRIPTION	COMMENTS
	M4776P3	Control Panel and Door Hinge Kit	B and I models; To change from old look to new look
1	44058102P	Door Assembly	H models
	44028902P	Door Assembly	M, N and S models; U models through 8/17/14
	44266701P	Door Assembly	U models; Models starting 8/18/14
	44320202	Door Assembly	H and U models; Gray
	44058104P	Door Assembly	H models; Chrome option
	44028905P	Door Assembly	S models; Chrome option
	44266702P	Door Assembly	U models; Chrome option
	44112101	Door Assembly	B, C and I models through 7/31/11
	44028903	Door Assembly	B, C and I models starting 8/1/11; S models; Black
	44029101	Door Assembly	L models through 1/28/15; P models through 9/30/14
	44292301LGP	Door Assembly	P models starting 10/1/14; L models starting 1/29/15; Light gray
	44292301BP	Door Assembly	P models; Models starting 7/5/16; Use with stainless steel front panel; Black
	70407401P	Door Assembly	G and K models
2	44008201P	Door Ring Gasket	
3	44071201	Nut	H, M, N and S models; 4 required
4	23951	Nut	6 required
5	70399501B	Handle Bar	G and K models
6	70211902P	Door Seal Kit	Use Loctite 414 for seal
7	44008402P	Door Glass	H models
	44008401P	Door Glass	All other models
8	M4221P4	Door Glass Installation Tool	
9	70126301	Pop Rivet	G and K models; 4 required
10	70409301	Washer	G and K models; 2 required
11	70411401	Nameplate Overlay	G models; Coin
	44144401	Nameplate Overlay	K models; Coin
12	M414215	Nut	
13	44057702	Door Handle	H models
	44007901	Door Handle	M, N and S models; U models through 8/17/14; B, C and I models starting 8/1/11
	44263801	Door Handle	U models; Models starting 8/18/14; Use 901620 Screw, 803871 Screw and 44088001 Nut to attach
	70538103	Door Handle	H and U models; Models starting 4/1/19
	M400133	Door Handle	P models through 9/30/14; Use two M409385 Screws
14	44326001	Door Ring Assembly	H, M, N and S models; P models through 9/30/14; U models through 8/17/14; L models through 1/28/15
	44326005	Door Ring Assembly	H and S models; Chrome option
	44326006	Door Ring Assembly	U models; Chrome option
	44326002	Door Ring Assembly	U models; Models starting 8/18/14
	44326007LG	Door Ring and Handle Assembly	P models starting 10/1/14; L models starting 1/29/15; Light gray
	44326007B	Door Ring and Handle Assembly	P models starting 7/5/16; Use with stainless steel and white front panel; Black
	44112001	Door Ring and Handle Assembly	B, C and I models through 7/31/11
	44326004B	Door Ring Assembly	B, C and I models starting 8/1/11; S models without stainless steel front panel
	44326003B	Door Ring Assembly	G and K models
	44326004HG	Door Ring Assembly	H and U models without stainless steel front panel
15	M400661	Screw	Door strike
16	61199	Screw	H, M, N and S models; 4 required

© Copyright, Alliance Laundry Systems LLC – DO NOT COPY or TRANSMIT

Hinge Components

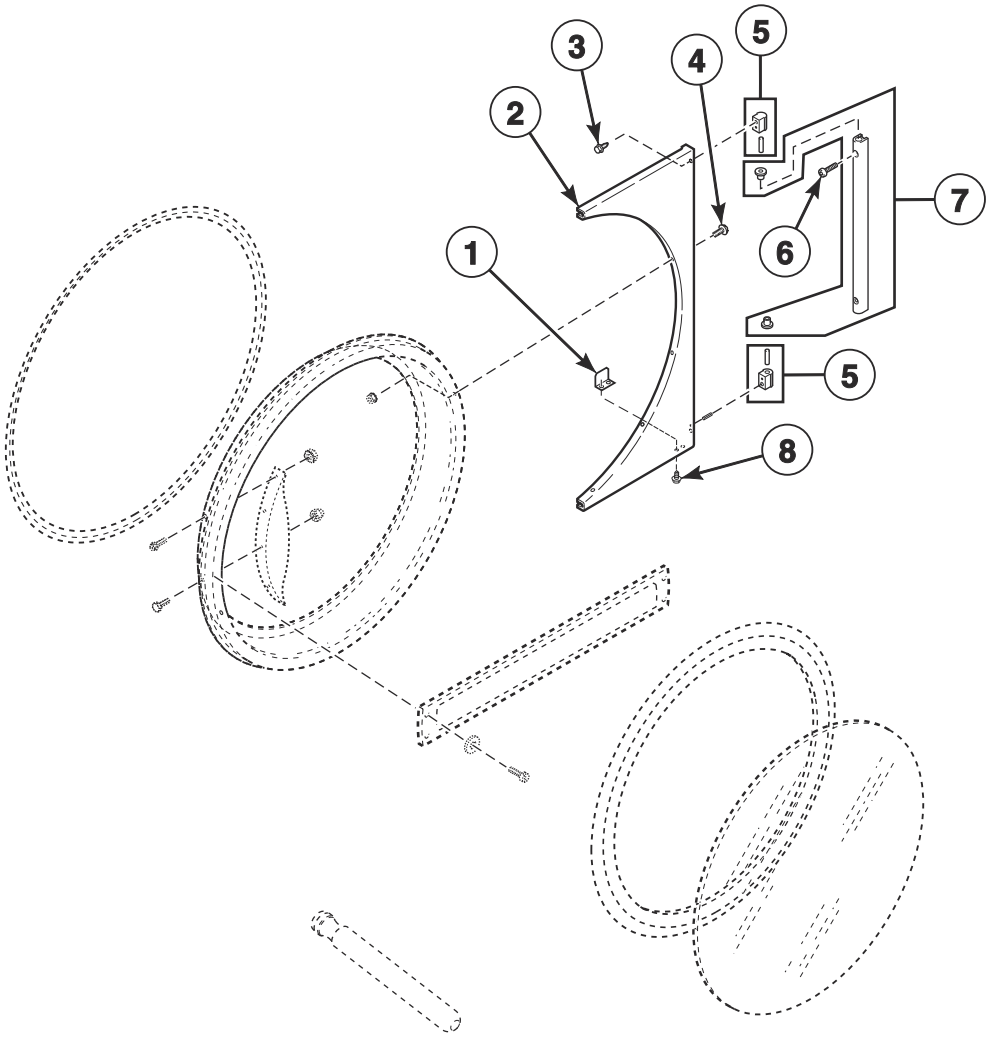

TMB3091PA_70421801

© Copyright, Alliance Laundry Systems LLC – DO NOT COPY or TRANSMIT

Hinge Components

REF	PART NO.	DESCRIPTION	COMMENTS
	M4776P3	Control Panel and Door Hinge Kit	B and I models; To change from old look to new look
1	70215001P	Door Switch Actuator Kit	
2	44075208B	Door Hinge Assembly	Black; G and K models; B and I models starting 8/1/11; P models starting 7/1/17 with white front panel and starting 7/5/16 with stainless steel front panel
	44075203*	Door Hinge Assembly	H, M, N, S, U and Y models; P models through 9/30/14; L models through 1/28/15; C models starting 8/1/11
	44075204	Door Hinge Assembly	C, H, M, S, U and Y models through 3/31/15; P models through 9/30/14; B and I models through 7/31/11; L models through 1/28/15; Stainless steel
	44075211	Door Hinge Assembly	H, M, S, U and Y models starting 4/1/15; Stainless steel
	44075208LG	Door Hinge Assembly	L, P and U models; Light gray
3	70442101	Screw	3 required
4	44349101	Screw	6 required
5	M4773P3	Hinge Cam Kit	Black; G and K models; B and I models starting 8/1/11; P models starting 7/1/17 with white front panel and starting 7/5/16 with stainless steel front panel
	M4772P3	Hinge Cam Kit	C, H, L, M, N, P, S, U and Y models; B and I models through 7/31/11
6	70409801	Screw	Black; G and K models; B and I models starting 8/1/11; P models starting 7/1/17 with white front panel and starting 7/5/16 with stainless steel front panel; 2 required
	70033502	Screw	C, H, L, M, N, P, S, U and Y models; B and I models through 7/31/11; 2 required
7	44035002	Door Hinge Lug Assembly	Black; G and K models; B and I models starting 8/1/11; P models starting 7/1/17 with white front panel and starting 7/5/16 with stainless steel front panel
	44035001	Door Hinge Lug Assembly	C, H, L, M, N, P, S, U and Y models; B and I models through 7/31/11
8	70058501	Pop Rivet	2 required

*** Add Letter To Designate Color. L - Almond Q - Bisque W - White**

© Copyright, Alliance Laundry Systems LLC – DO NOT COPY or TRANSMIT

Cylinder and Trunnion Components

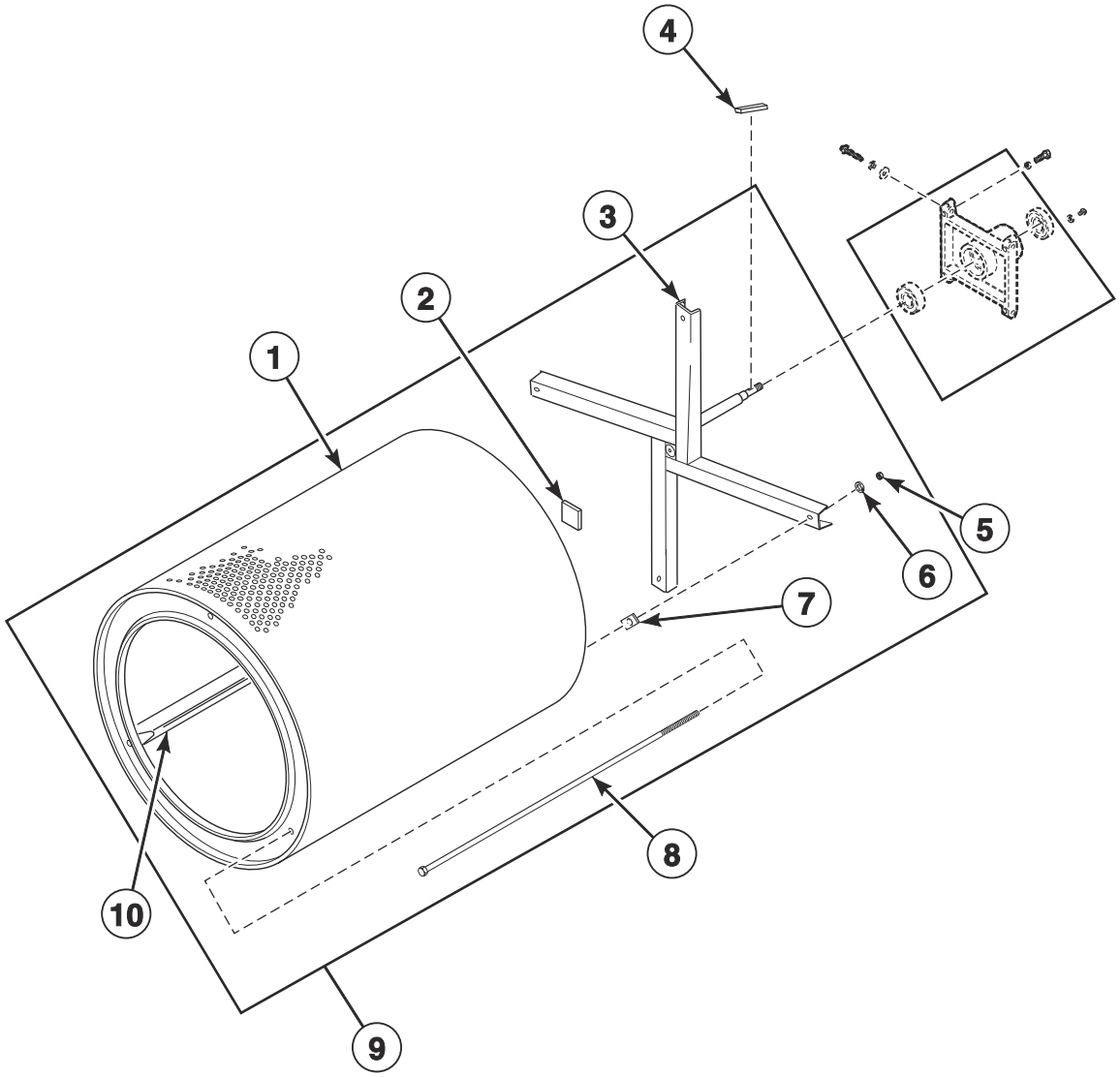

TMB3796P_70421801

© Copyright, Alliance Laundry Systems LLC – DO NOT COPY or TRANSMIT

Cylinder and Trunnion Components

REF	PART NO.	DESCRIPTION	COMMENTS
1	44057001P	Cylinder Kit	Galvanized; B, C, H, I, L, M, N, P, S and U models; Non-moisture sensing
	44196301	Cylinder Assembly	Galvanized; B, C, H, I, L, M, N, P, S and U models; Moisture sensing
	44057101P	Cylinder Kit	Stainless steel; B, C, H, I, L, M, N, P, S and U models; Non-moisture sensing
	44196302	Cylinder Assembly	Stainless steel; B, C, H, I, L, M, N, P, S and U models; Moisture sensing
	44130802	Cylinder Assembly	G and K models; Non-moisture sensing
	44196303	Cylinder Assembly	G and K models; Moisture sensing
	44089001	Cylinder Assembly	Stainless steel; U models with the 11th character of R; Non-moisture sensing
2	M402144	Felt Pad	
3	44261801	Trunnion Assembly	Spider; Nonreversing; Models through 1/31/12
	M413834P	Trunnion Assembly	Spider; Reversing; Models through 1/31/12
	44208001P	Trunnion Assembly	Spider; Models starting 2/1/12; Non-moisture sensing; Use on reversing and nonreversing models and also nonreversing starting Serial No. 030101089
	44207901P	Trunnion Assembly	Models starting 8/1/11; Moisture sensing; Use on reversing and nonreversing models
4	M400008	Key	Half moon; Nonreversing models through 7/31/11; All models starting 8/1/11
	M405232	Key	Straight; Reversing; Models through 7/31/11
5	M404993	Nut	
6	M400015	Washer	4 required
7	M401402	Spacer	Adjustment between cylinder and trunnion
8	M401411	Rib Rod	
9	44057401P	Cylinder and Trunnion Assembly	Galvanized; Nonreversing; B, C, H, I, L, M, P, S and U models through 7/31/11
	44057402P	Cylinder and Trunnion Assembly	Stainless steel; Nonreversing; B, C, H, I, L, M, P, S and U models through 7/31/11
	44057403	Cylinder and Trunnion Assembly	Galvanized; Reversing; B, C, H, I, L, M, P, S and U models through 1/31/12
	44057404	Cylinder and Trunnion Assembly	Stainless steel; Reversing; B C, H, I, L, M, P, S and U models through 1/31/12
	44195601	Cylinder and Trunnion Assembly	Galvanized; B, C, H, I, L, M, P, S and U models starting 2/1/12; Non-moisture sensing
	44195602	Cylinder and Trunnion Assembly	Stainless steel; B, C, H, I, L, M, P, S and U models starting 2/1/12; Non-moisture sensing
	44195605P	Cylinder and Trunnion Assembly	Galvanized; B, C, H, I, L, M, N, P, S and U models; Moisture sensing
	44195606	Cylinder and Trunnion Assembly	Stainless steel; B, C, H, I, L, M, N, P, S and U models; Moisture sensing
	44131002	Cylinder and Trunnion Assembly	Reversing; G and K models through 7/31/11
	44131102	Cylinder and Trunnion Assembly	Nonreversing; G and K models through 7/31/11
	44195603	Cylinder and Trunnion Assembly	G and K models starting 8/1/11; Non-moisture sensing
	44195607	Cylinder and Trunnion Assembly	G and K models; Moisture sensing
	44089101	Cylinder and Trunnion Assembly	Stainless steel; U models with the 11th character of R through 7/31/11
	44195604	Cylinder and Trunnion Assembly	Stainless steel; U models with the 11th character of R starting 8/1/11; Non-moisture sensing
10	44191201	Cylinder Rib Assembly	Moisture sensing; Use 16 31098 Screws to attach

© Copyright, Alliance Laundry Systems LLC – DO NOT COPY or TRANSMIT

Bearing Components

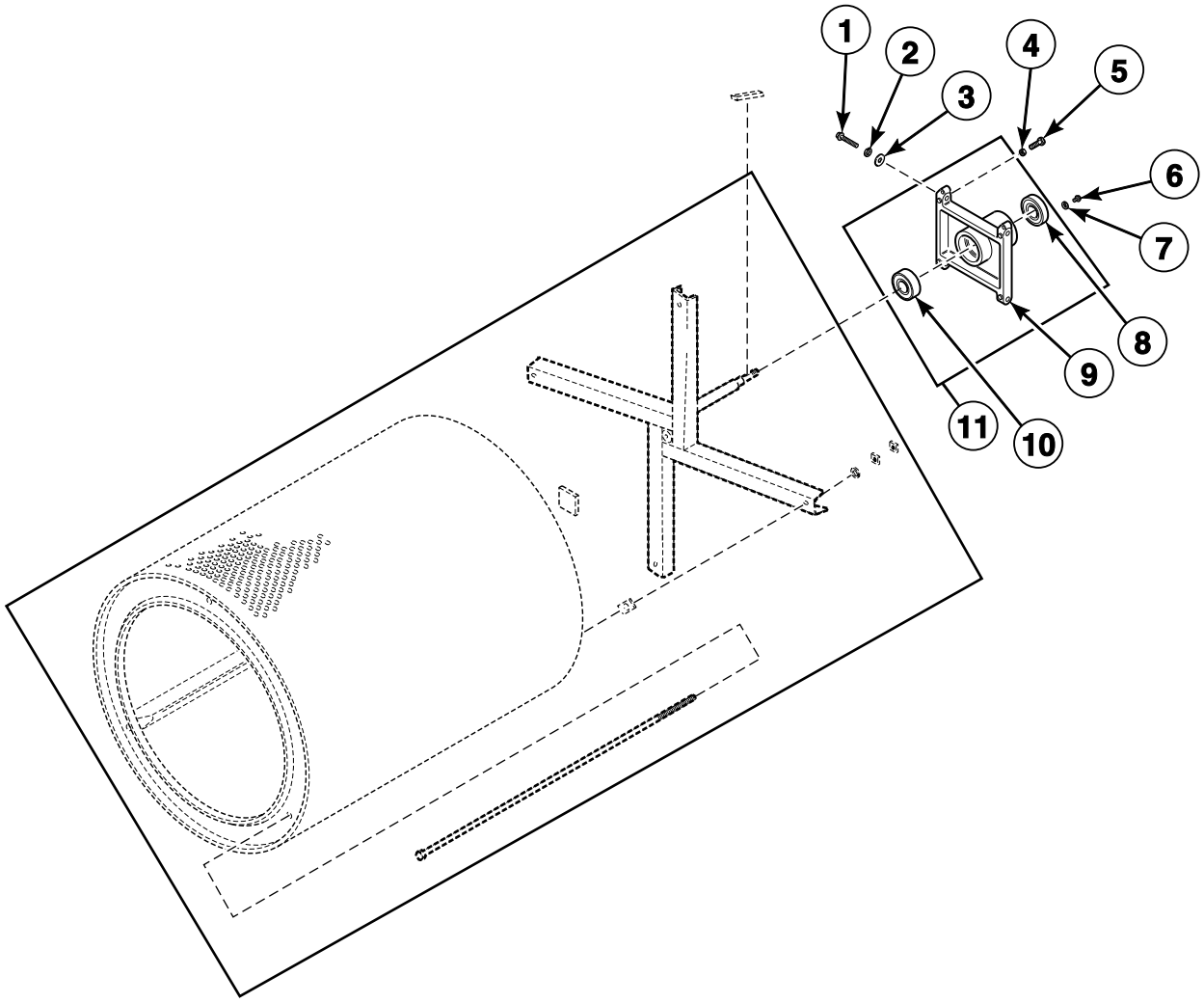

TMB2123PA_70421801

© Copyright, Alliance Laundry Systems LLC – DO NOT COPY or TRANSMIT

Bearing Components

REF	PART NO.	DESCRIPTION	COMMENTS
	M4640P3	Trunnion and Bearing Assembly	Nonreversing models through 7/31/11; Non-moisture sensing reversing and nonreversing models starting 8/1/11
	M4641P3	Trunnion and Bearing Assembly	Reversing; Models through 7/31/11; Non-moisture sensing
	44336301	Trunnion and Bearing Assembly	Moisture sensing; Use on reversing and nonreversing models; Does not include moisture sensing harness
	M4644P3	Housing and Trunnion Assembly	Includes bearing; Nonreversing; Non-moisture sensing
	M4645P3	Housing and Trunnion Assembly	Includes bearing; Reversing; Models through 7/31/11; Non-moisture sensing
	44336302	Housing and Trunnion Assembly	Moisture sensing; Use on reversing and nonreversing models; Does not include moisture sensing harness
1	M400063	Screw	4 required
2	M400015	Washer	4 required
3	70261401	Washer	4 required
4	M400026	Nut	4 required
5	M400650	Bolt	2 required
6	70187201	Screw	4 required
7	20103	Washer	4 required
8	F100136P	Bearing	
9	M413826P	Trunnion Housing	
10	44041901P	Ball Bearing	
11	44375001P	Trunnion Housing Assembly	Includes bearing

© Copyright, Alliance Laundry Systems LLC – DO NOT COPY or TRANSMIT

Reversing Cylinder Drive Motor and Components

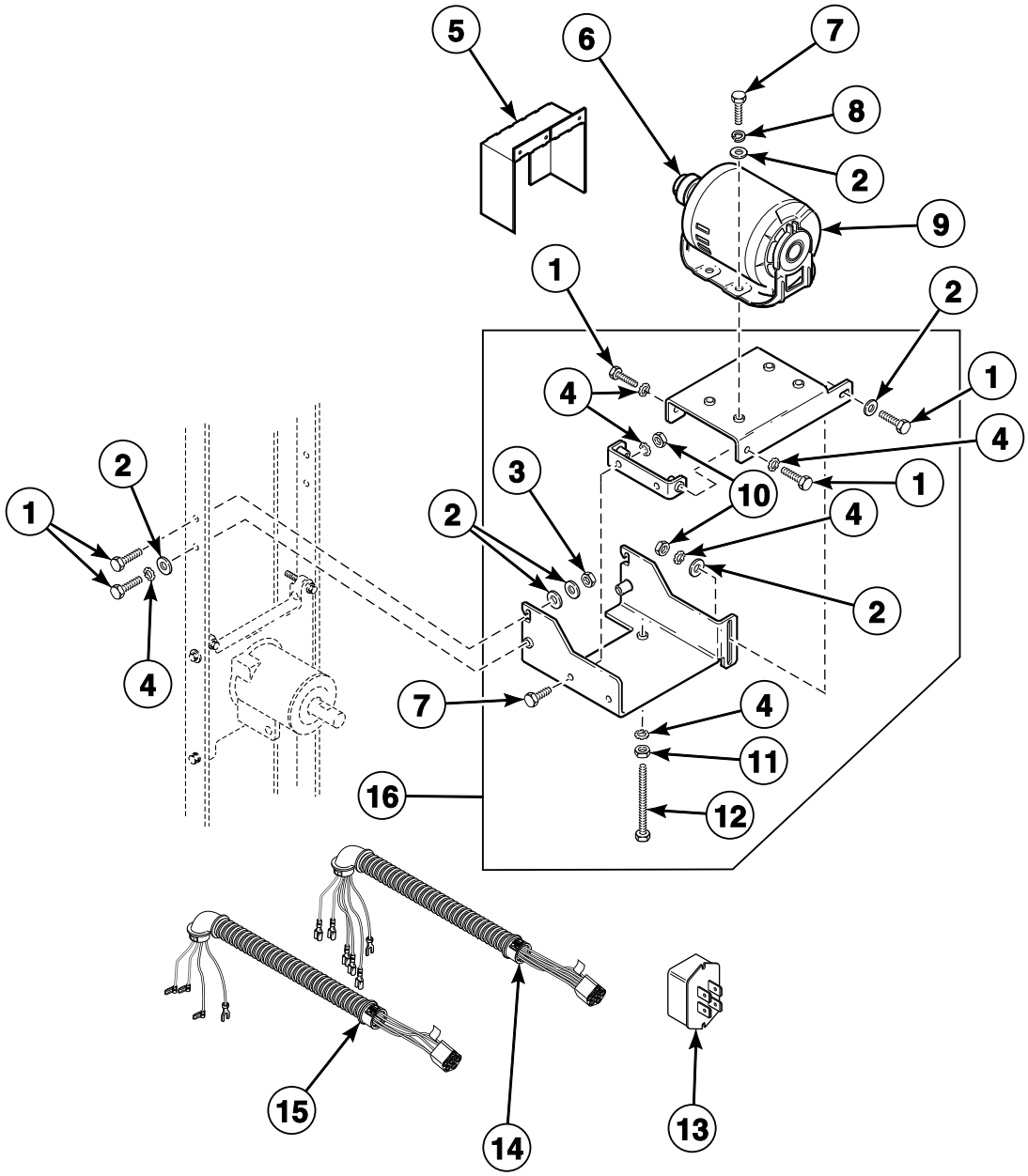

TMB3168P_70421801

© Copyright, Alliance Laundry Systems LLC – DO NOT COPY or TRANSMIT

Reversing Cylinder Drive Motor and Components

REF	PART NO.	DESCRIPTION	COMMENTS
1	M400056	Screw	7 required
2	M400080	Washer	10 required
3	M412986	Nut	2 required
4	02834	Washer	8 required
5	M413541	Belt Guard	Upper
6	M414565	Pulley	60 Hertz
	M414567	Pulley	50 Hertz; Non-moisture sensing models through 1/31/12
	44233601	Pulley	50 Hertz; Moisture sensing models starting 8/1/11; Non-moisture sensing models starting 2/1/12
7	M400057	Screw	6 required
8	M400013	Washer	4 required
9	M412519	Motor	Gas and steam models with: 200-208 or 240 Volt/60 Hertz/3 Phase, 460-480 Volt/60 Hertz/3 Phase, 200 Volt/50 Hertz/3 Phase, 230 or 240 Volt/50 Hertz/3 Phase and 380 or 400-415 Volt/50 Hertz/3 Phase; Electric models with: 200-208 Volt/60 Hertz/3 Phase, 240 Volt/50 or 60 Hertz/3 Phase, 480 Volt/60 Hertz/3 Phase, 200 Volt/50 Hertz/3 Phase, 380 Volt/50 Hertz/3 Phase and 400-415/50 Hertz/3 Phase
	M412520P	Motor Kit	Gas and steam models with: 230-240 Volt/50 Hertz/1 Phase; Electric models with: 240 Volt/50 Hertz/1 Phase
	44253201p	Drive Motor	120 Volt/1 Phase; Use 44266801 Start Capacitor
10	70142	Nut	3 required
11	02428	Nut	
12	M413565	Screw	
13	M414563	Motor Switch	1 Phase
14	44139701P	Cylinder Motor Harness	1 Phase
15	44137101P	Cylinder Motor Harness	3 Phase
16	M413617	Motor Mount Assembly	Includes items 1-4, 7 and 10-12

© Copyright, Alliance Laundry Systems LLC – DO NOT COPY or TRANSMIT

Drive Components for Non-Moisture Sensing Reversing Models Through 1/31/12

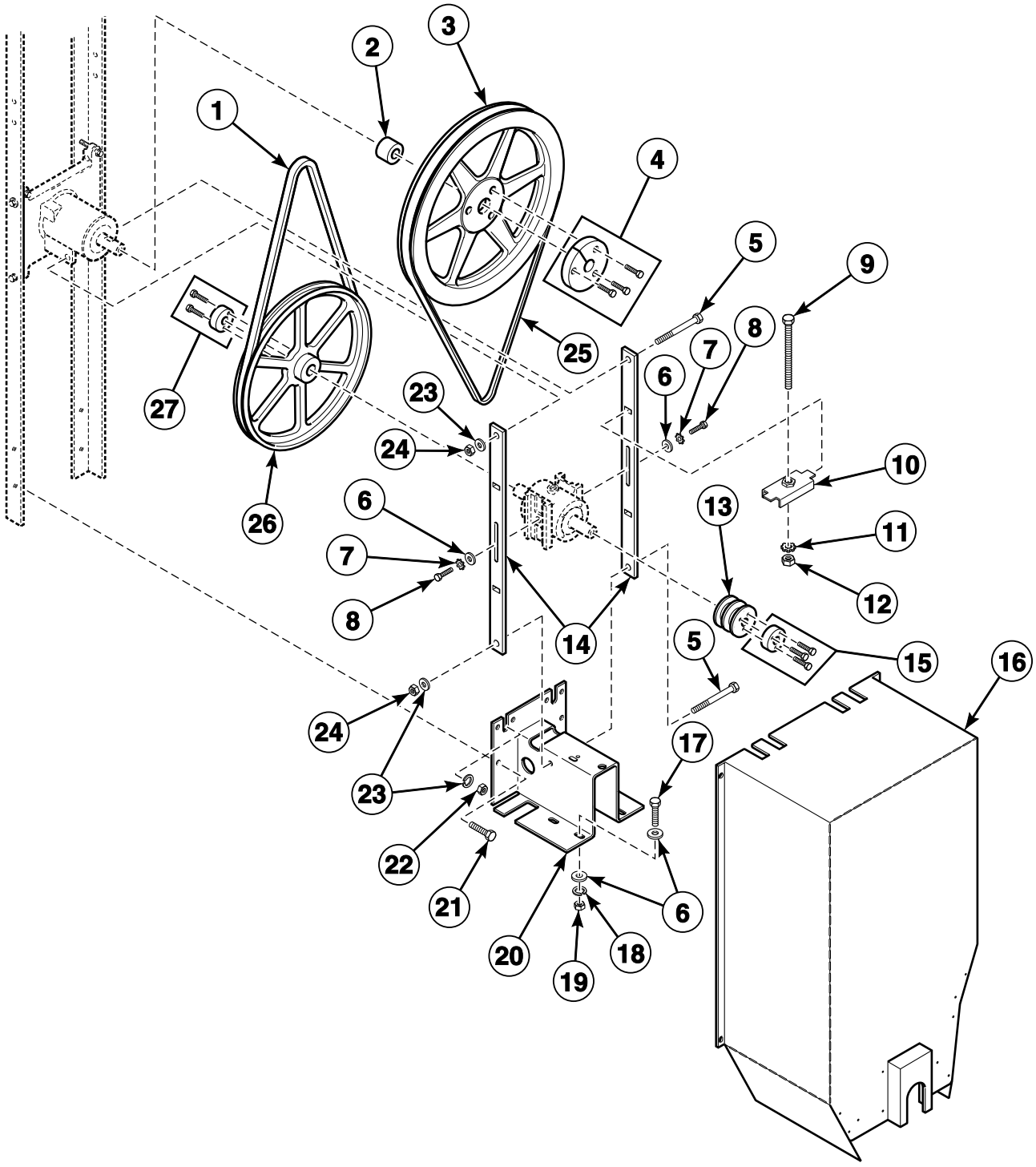

TMB2529P_70421801

© Copyright, Alliance Laundry Systems LLC – DO NOT COPY or TRANSMIT

Drive Components for Non-Moisture Sensing Reversing Models Through 1/31/12

REF	PART NO.	DESCRIPTION	COMMENTS
1	M412981	Belt	Drive
2	44024001	Spacer	
3	M412916	Double V Sheave	
4	M412086P	Bushing	Includes M412086 Bushing, M400013 Washer and 44079203 Screw; Bushing includes 44048902 Set Screw
5	M400061	Screw	
6	M400080	Washer	
7	M403958	Washer	2 required
8	F430116	Screw	
9	M412627	Screw	
10	M414405	Tension Plate Assembly	
11	M412188	Washer	
12	H88412101	Nut	
13	M412884	Pulley	
14	M412476	Guide Rail	
15	M412917P	Bushing	Bushing includes 56552 Washer, 44048901 Set Screw and 44079301 Screw
16	44132402	Belt Guard Assembly	Use 51780 Screw to mount
17	M400057	Screw	
18	M400013	Washer	4 required
19	02428	Nut	4 required
20	44117201	Motor Bracket	
21	M401393	Bolt	2 required
22	20274	Nut	
23	M400014	Washer	
24	M400026	Nut	2 required
25	M412090	Belt	2 required; Cylinder
26	M412931	Single V Sheave	
27	M412885P	Bushing	Includes 03189 Washer and F430107 Screw

© Copyright, Alliance Laundry Systems LLC – DO NOT COPY or TRANSMIT

Drive Components for Moisture Sensing Reversing Models Starting 8/1/11 and Non-Moisture Sensing Reversing Models Starting 2/1/12

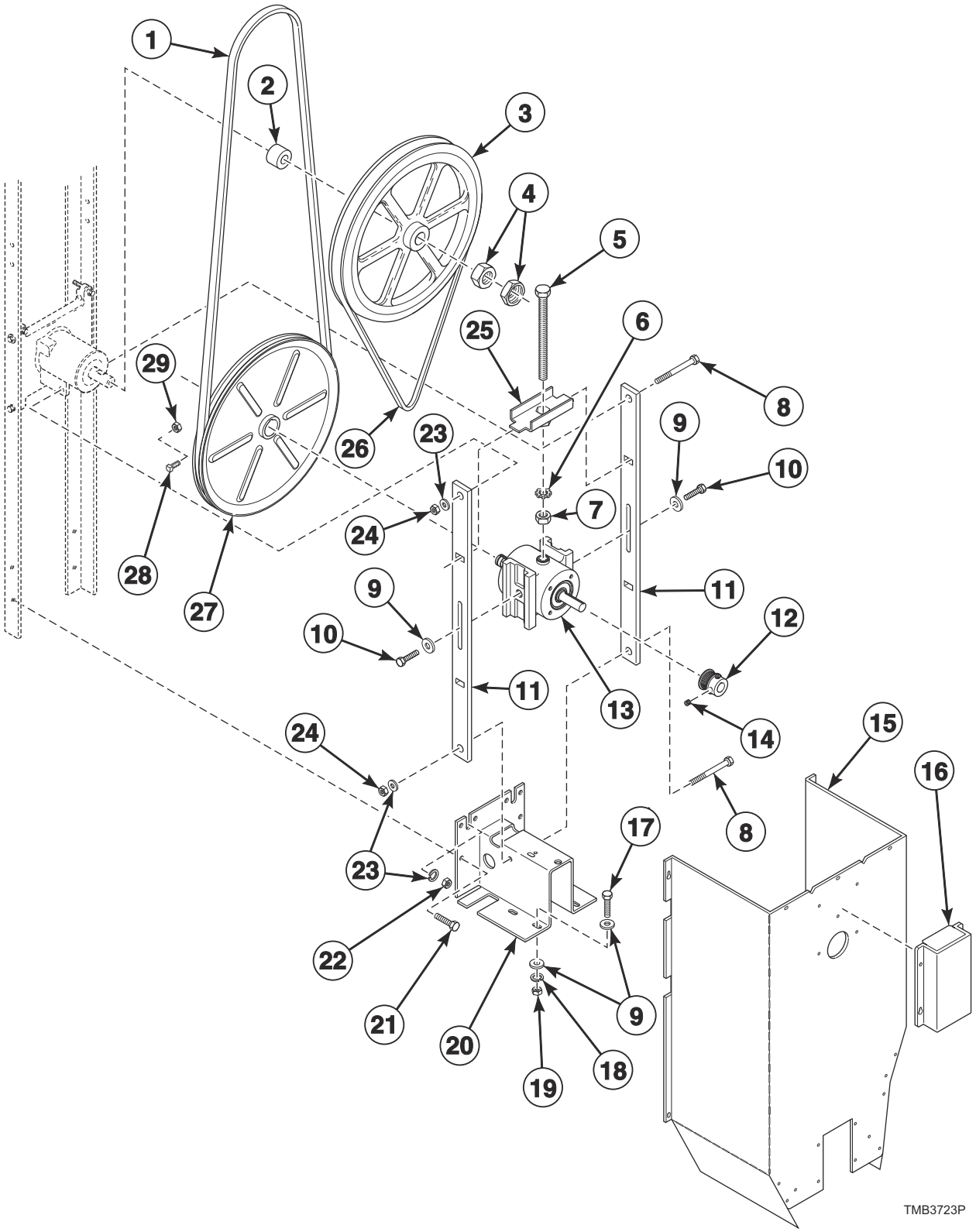

© Copyright, Alliance Laundry Systems LLC – DO NOT COPY or TRANSMIT

Drive Components for Moisture Sensing Reversing Models Starting 8/1/11 and Non-Moisture Sensing Reversing Models Starting 2/1/12

REF	PART NO.	DESCRIPTION	COMMENTS
	44209002	Belt Idler Assembly	Includes items 5-7, 9-14 and 25
	44341501	Reversing Kit	2 groove pulley/double V-belt
1	M412981	Belt	
2	44024001	Spacer	
3	44338701	Sheave	Use with 3V belt system
	M412156	Micro V Sheave	Use with micro V system
4	M400033	Nut	
5	M412627	Screw	
6	M412188	Washer	
7	H88412101	Nut	
8	M400061	Screw	
9	M400080	Washer	
10	70126103	Screw	
11	M412476	Guide Rail	
12	44338601	Pulley	Use with 3V belt system
	M411466P	Micro V Pulley	Use with micro V system
13	44107101	Idler Housing Assembly	
14	M400077	Screw	
15	44132409	Belt Guard Assembly	Use 51780 Screw to mount; Moisture sensing
	44132402	Belt Guard Assembly	Use 51780 Screw to mount; Non-moisture sensing
16	44222501	Guard Extension	
17	M400057	Screw	
18	M400013	Washer	
19	02428	Nut	
20	44117201	Motor Bracket	
21	M401393	Bolt	
22	20274	Nut	
23	M400014	Washer	
24	M400026	Nut	
25	M414405	Tension Plate Assembly	
26	M412090	Belt	Use with 3V belt system; 2 required
	M411425P	Micro V Belt	Use with micro V system
27	44086901P	Sheave Kit	
28	F430533	Screw	
29	44087201	Nut	

© Copyright, Alliance Laundry Systems LLC – DO NOT COPY or TRANSMIT

Drive Components for Nonreversing Models Through 3/31/11

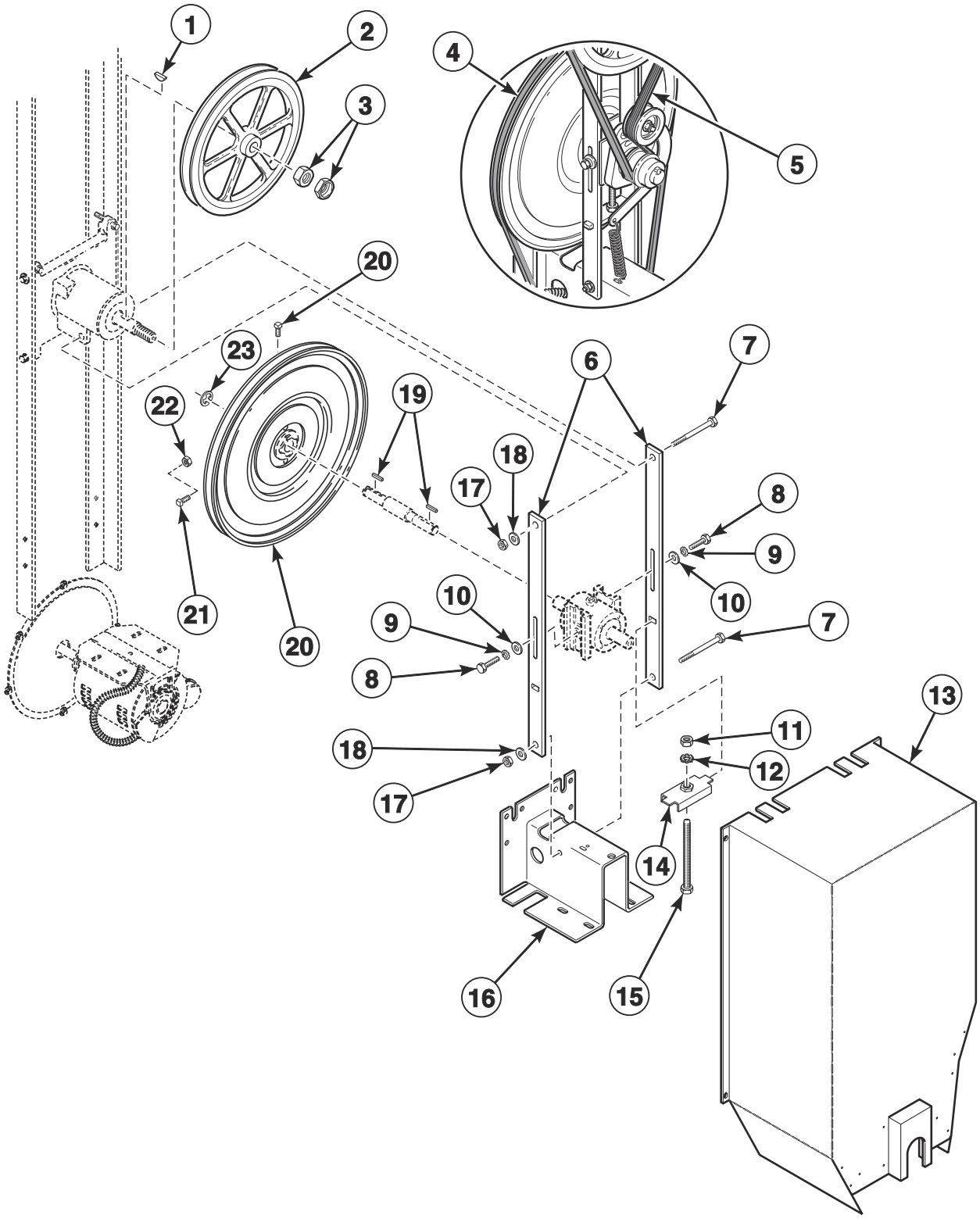

TMB3321P

© Copyright, Alliance Laundry Systems LLC – DO NOT COPY or TRANSMIT

Drive Components for Nonreversing Models Through 3/31/11

REF	PART NO.	DESCRIPTION	COMMENTS
1	M400008	Key	
2	M412156	Micro V Sheave	
3	M400033	Nut	
4	M401182P	Belt	
5	M411425P	Micro V Belt	
6	M412476	Guide Rail	
7	M400061	Screw	
8	F430116	Screw	
9	M403958	Washer	
10	M400080	Washer	
11	H88412101	Nut	
12	M412188	Washer	
13	44132401	Belt Guard Assembly	Use 51780 Screw to mount
14	M414405	Tension Plate Assembly	
15	M412627	Screw	
16	44117201	Motor Bracket	
17	M400026	Nut	
18	M400014	Washer	
19	M401327	Key	
20	44086901P	Sheave Kit	Includes item 19 and 2 of item 21
21	F430533	Screw	
22	44087201	Nut	
23	M400399	Ring	

NOTE: On nonreversing models, there is only one motor that functions as the drive motor and fan motor. Refer to *Fan Motors* section for motor part numbers.

© Copyright, Alliance Laundry Systems LLC – DO NOT COPY or TRANSMIT

Drive Components for Nonreversing Models Starting 4/1/11

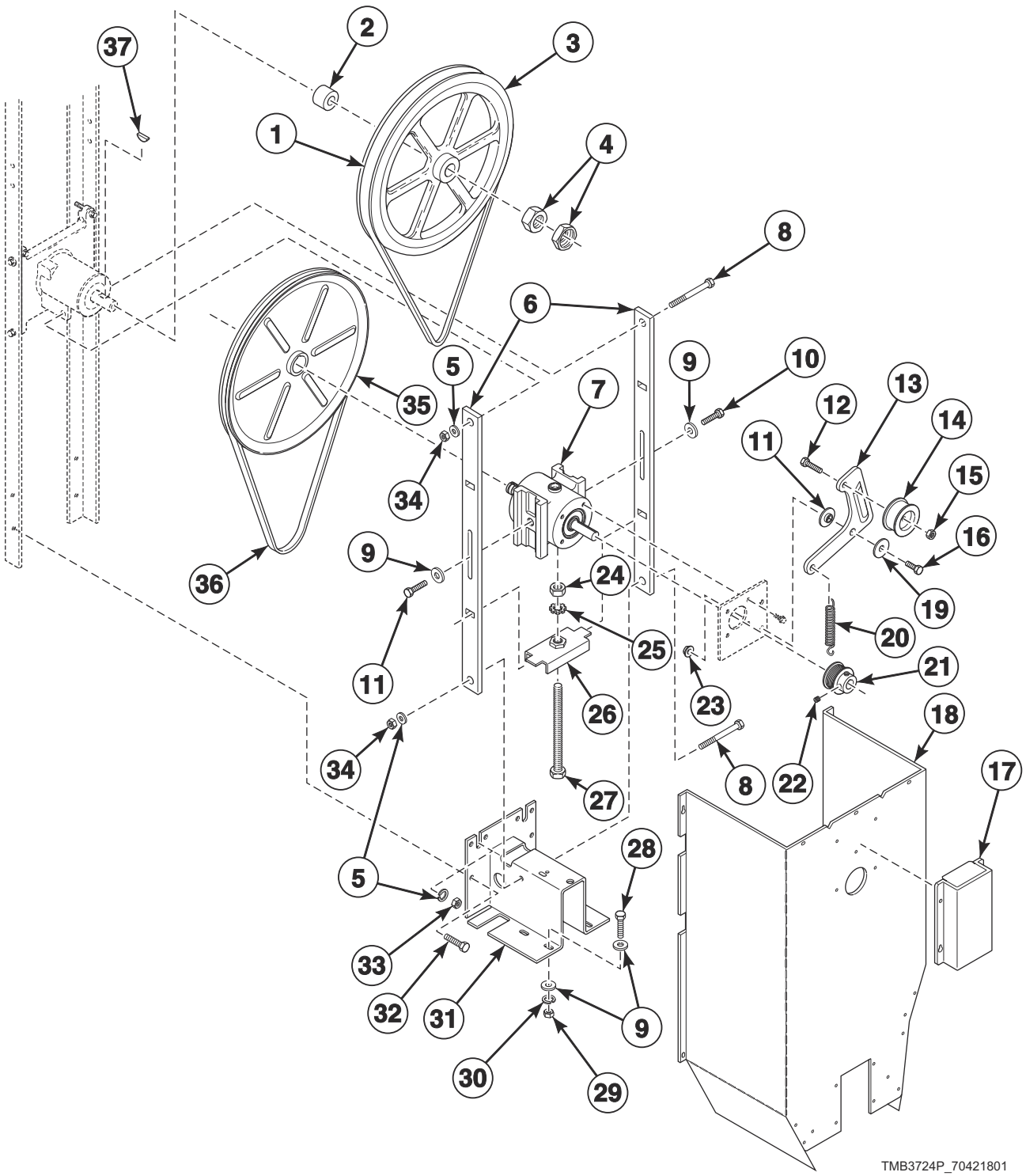

© Copyright, Alliance Laundry Systems LLC – DO NOT COPY or TRANSMIT

Drive Components for Nonreversing Models Starting 4/1/11

REF	PART NO.	DESCRIPTION	COMMENTS
	44209001	Belt Idler Assembly	Includes items 7, 8, 10, 11, 22, 23, 25-28 and 36
	44107202	Idler Assembly	
1	M411425P	Micro V Belt	
2	44024001	Spacer	
3	M412156	Micro V Sheave	
4	M400033	Nut	
5	M400014	Washer	
6	M412476	Guide Rail	
7	44107101	Idler Housing Assembly	
8	M400061	Screw	
9	M400080	Washer	
10	70126103	Screw	
11	70265901	Washer	
12	430648	Screw	
13	44102701	Idler Arm	
14	430619	Drum Idler Wheel Assembly	
15	56156	Nut	
16	M400056	Screw	
17	44222501	Guard Extension	
18	44132401	Belt Guard Assembly	Use 51780 Screw to mount; Non-moisture sensing
	44132408	Belt Guard Assembly	Use 51780 Screw to mount; Moisture sensing
19	70270301	Washer	
20	M412120	Extension Spring	
21	M411466P	Micro V Pulley	
22	M400077	Screw	
23	44087201	Nut	
24	H88412101	Nut	
25	M412188	Washer	
26	M414405	Tension Plate Assembly	
27	M412627	Screw	
28	M400057	Screw	
29	02428	Nut	
30	M400013	Washer	
31	44117201	Motor Bracket	
32	M401393	Bolt	
33	20274	Nut	
34	M400026	Nut	
35	44086901P	Sheave Kit	
36	M401182P	Belt	
37	M400008	Key	

NOTE: On nonreversing models, there is only one motor that functions as the drive motor and fan motor. Refer to *Fan Motors* section for motor part numbers.

© Copyright, Alliance Laundry Systems LLC – DO NOT COPY or TRANSMIT

Idler Housing Assembly for Non-Moisture Sensing Reversing Models Through 1/31/12

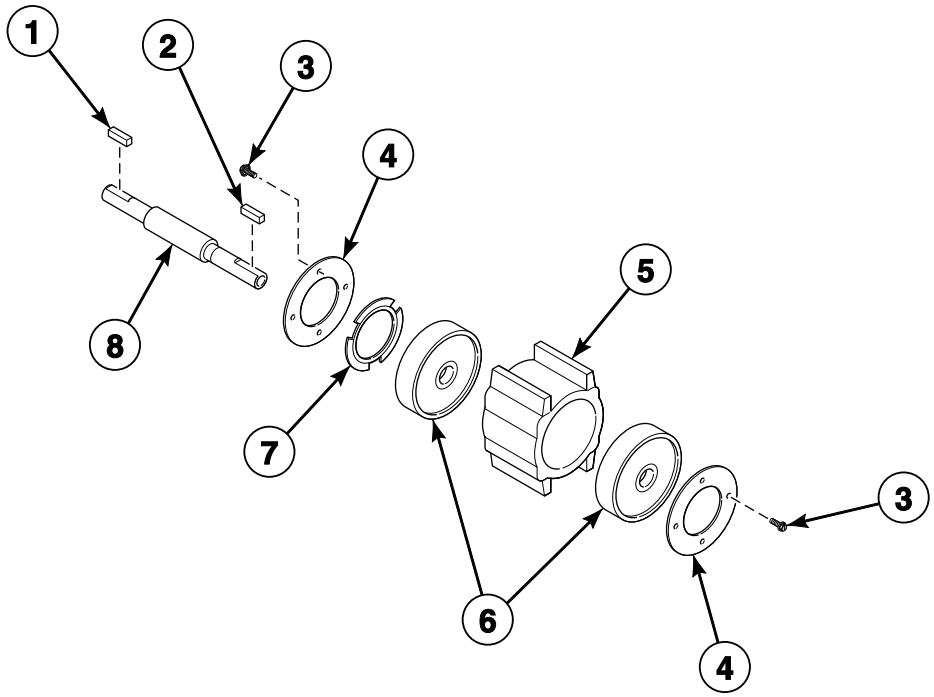

TMB2160P_70421801

© Copyright, Alliance Laundry Systems LLC – DO NOT COPY or TRANSMIT

Idler Housing Assembly for Non-Moisture Sensing Reversing Models Through 1/31/12

REF	PART NO.	DESCRIPTION	COMMENTS
	917P3	Idler Housing Kit	Includes items 1-4, 7 and M412476 Guide Rail, M412630 Idler Housing Assembly and 614P3 Idler Assembly Components Kit
1	H8752006H	Key	
2	M400993	Key	
3	70187201	Screw	8 required
4	M401370	Bearing Retainer	
5	M412612	Idler Housing	
6	M401375P	Ball Bearing	If bearing is marked 6304, order M401375P Ball Bearing; If bearing is marked 6204, order 70448701 Support Bearing
7	M400401	Loading Spring	
8	M414241	Idler Shaft	

© Copyright, Alliance Laundry Systems LLC – DO NOT COPY or TRANSMIT

Idler Assembly for Nonreversing Models Through 3/31/11

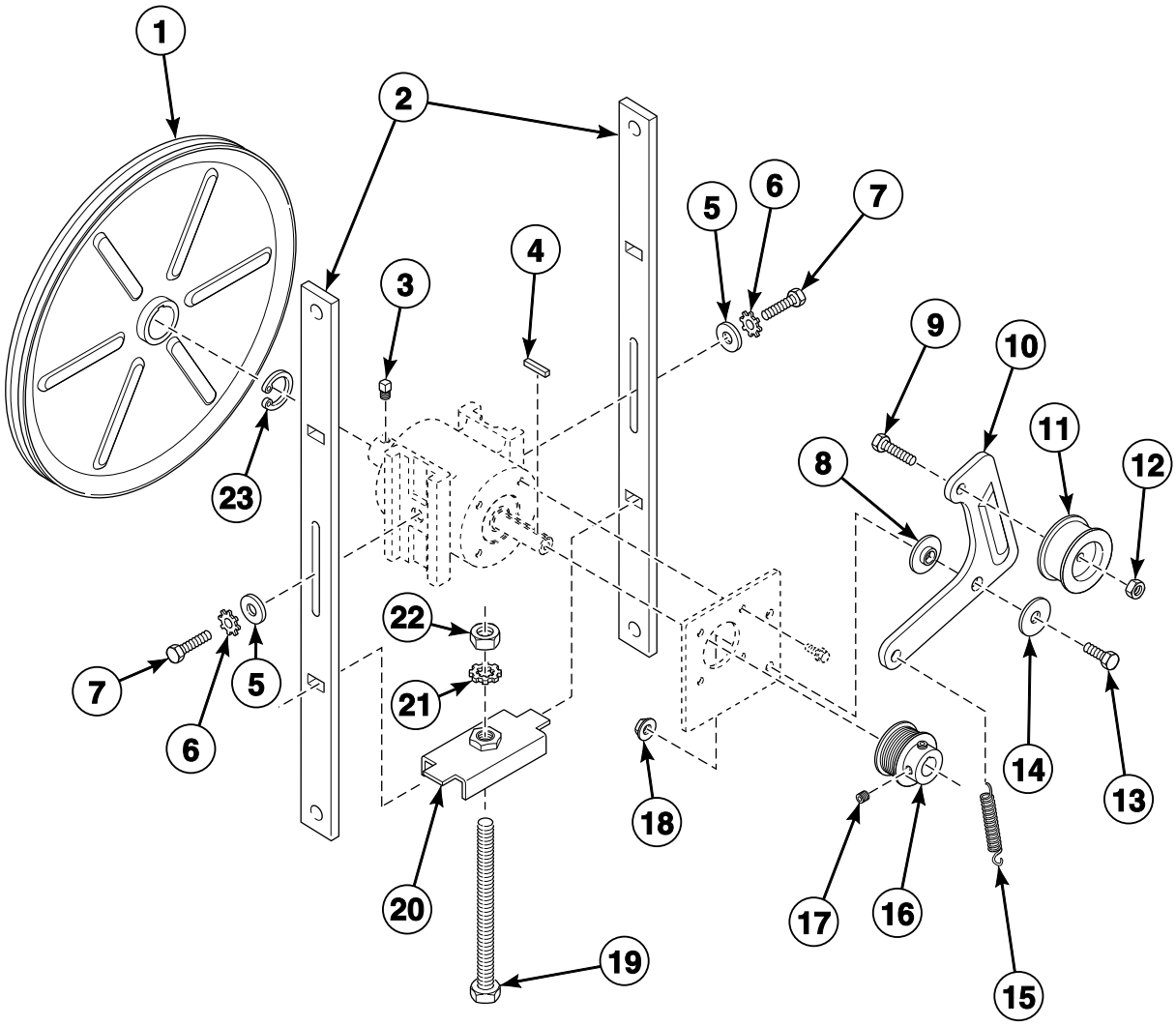

© Copyright, Alliance Laundry Systems LLC – DO NOT COPY or TRANSMIT

Idler Assembly for Nonreversing Models Through 3/31/11

REF	PART NO.	DESCRIPTION	COMMENTS
	942P3P	Idler/Belt Assembly Kit	Use to replace whole assembly
	943P3P	Idler Housing Kit	
1	44086901P	Sheave Kit	
2	M412476	Guide Rail	2 required
3	M400065	Screw	2 required
4	M401327	Key	2 required
5	M400080	Washer	2 required
6	M403958	Washer	2 required
7	F430116	Screw	2 required
8	70265901	Washer	
9	430648	Screw	
10	44102701	Idler Arm	
11	430619	Drum Idler Wheel Assembly	
12	56156	Nut	
13	M400056	Screw	
14	70270301	Washer	
15	M412120	Extension Spring	
16	M411466P	Micro V Pulley	
17	M400077	Screw	2 required
18	44087201	Nut	
19	M412627	Screw	
20	M414405	Tension Plate Assembly	
21	M412188	Washer	
22	H88412101	Nut	
23	M400399	Ring	

© Copyright, Alliance Laundry Systems LLC – DO NOT COPY or TRANSMIT

Moisture Sensing Components

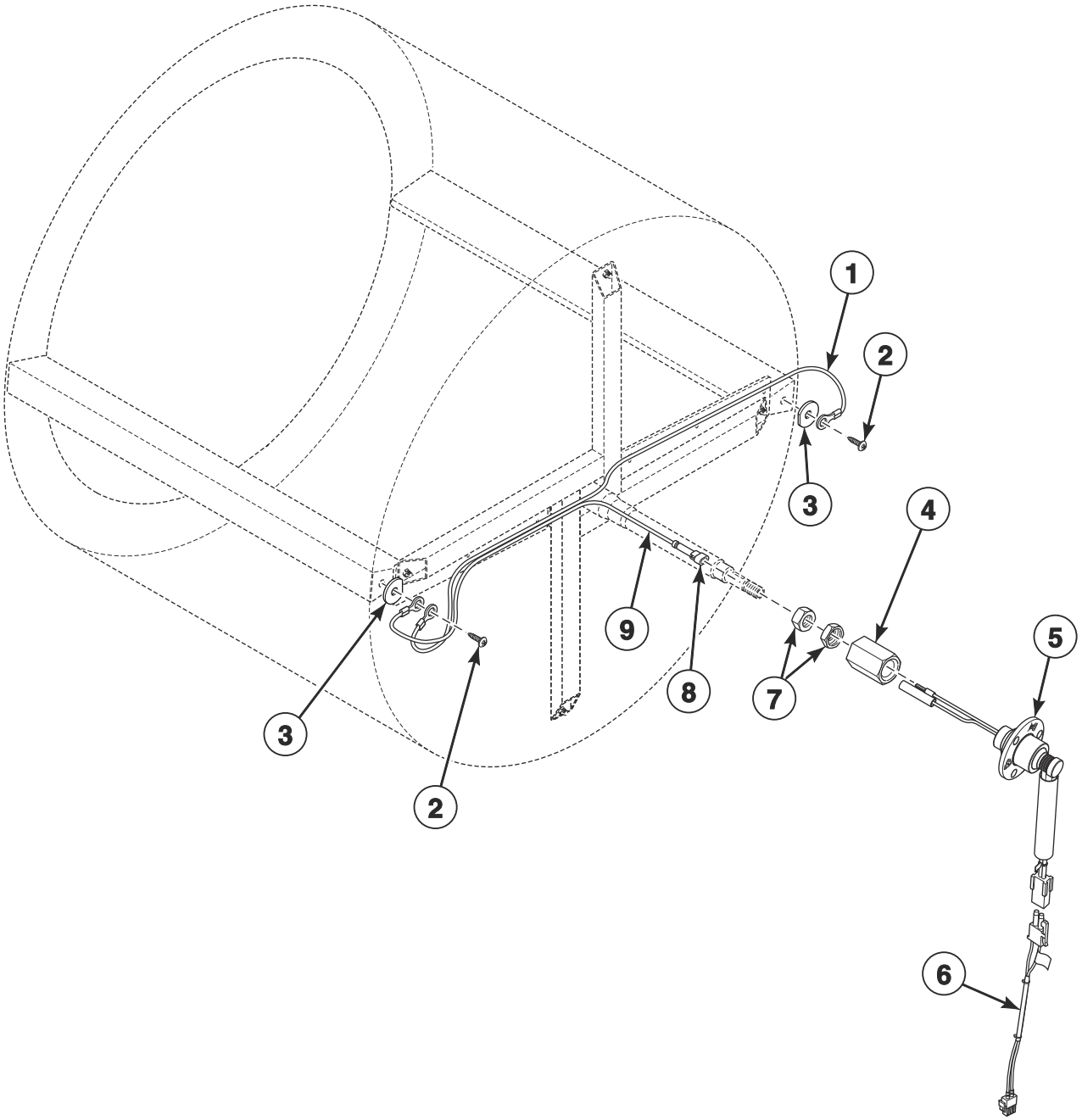

TMB3441P_70421801

© Copyright, Alliance Laundry Systems LLC – DO NOT COPY or TRANSMIT

Moisture Sensing Components

REF	PART NO.	DESCRIPTION	COMMENTS
	70468901	Moisture Sensor Test Wires	Use to troubleshoot the moisture sensor circuit
	44344702	Moisture Sensing Harness Kit	
1	44208601	Rib Wire	
2	44338901	Screw	
3	44238902	Washer	
4	44224401	Slip Ring Holder	
5	44222702	Slip Ring Assembly	
6	70448902	Moisture Sensor Harness Assembly	Goes from item 5 to main harness
7	M400033	Nut	
8	44370401	1 Circuit Plug Housing	
9	44208702	Shaft Wire	

© Copyright, Alliance Laundry Systems LLC – DO NOT COPY or TRANSMIT

Fan Components

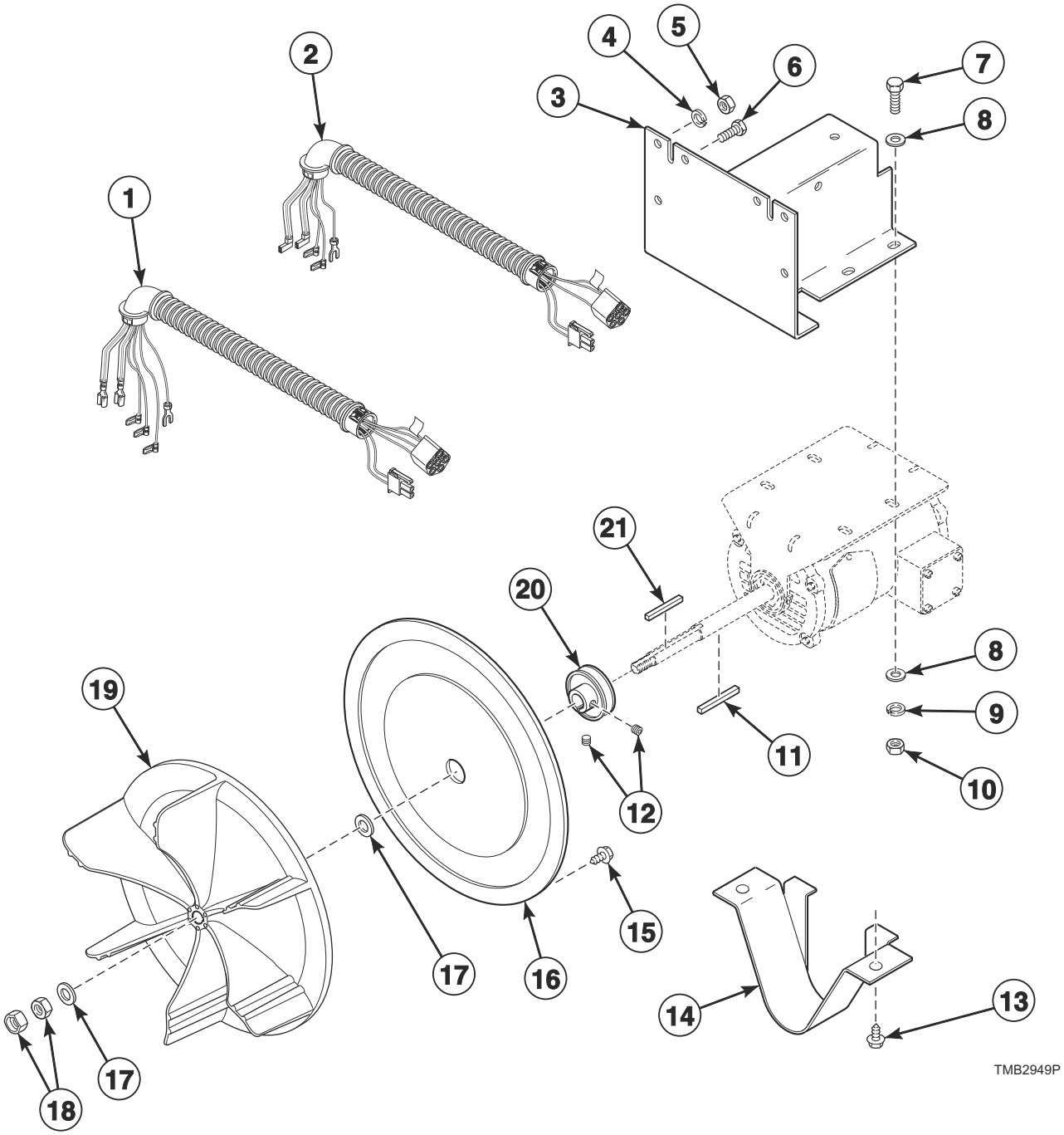

© Copyright, Alliance Laundry Systems LLC – DO NOT COPY or TRANSMIT

Fan Components

REF	PART NO.	DESCRIPTION	COMMENTS
	M4426P3	Motor Hardware Kit	Includes items 11, 17, 19 and 21
	M4525P3P	Resilient Ring Kit	2 per package
1	44169901	Fan Motor Harness	3 Phase
2	44137201P	Fan Motor Harness	1 Phase
3	44117201	Motor Bracket	
4	M400014	Washer	
5	20274	Nut	
6	M401393	Bolt	2 required
7	M400057	Screw	
8	M400080	Washer	
9	M400013	Washer	
10	02428	Nut	
11	44132301	Key	Nonreversing; All models: 120 Volt/60 Hertz/1 Phase or 200-208 or 240 Volt/60 Hertz/1 Phase; Electric models: 200-208 Volt/60 Hertz/3 Phase or 240 Volt/60 Hertz/3 Phase
	M400993	Key	All other voltages
12	M400077	Screw	Supplied with pulley
13	430497	Screw	
14	M413008	Belt Guard	
15	M410059	Screw	7 required
16	M401362	Cover Plate	
17	M400991	Washer	
18	M400022	Nut	
19	44127401P	Blower	
20	M414564	Pulley	60 Hertz; Nonreversing
	M414566	Pulley	50 Hertz; Nonreversing
21	M400994P	Key and Instruction Kit	

© Copyright, Alliance Laundry Systems LLC – DO NOT COPY or TRANSMIT

Fan Motors

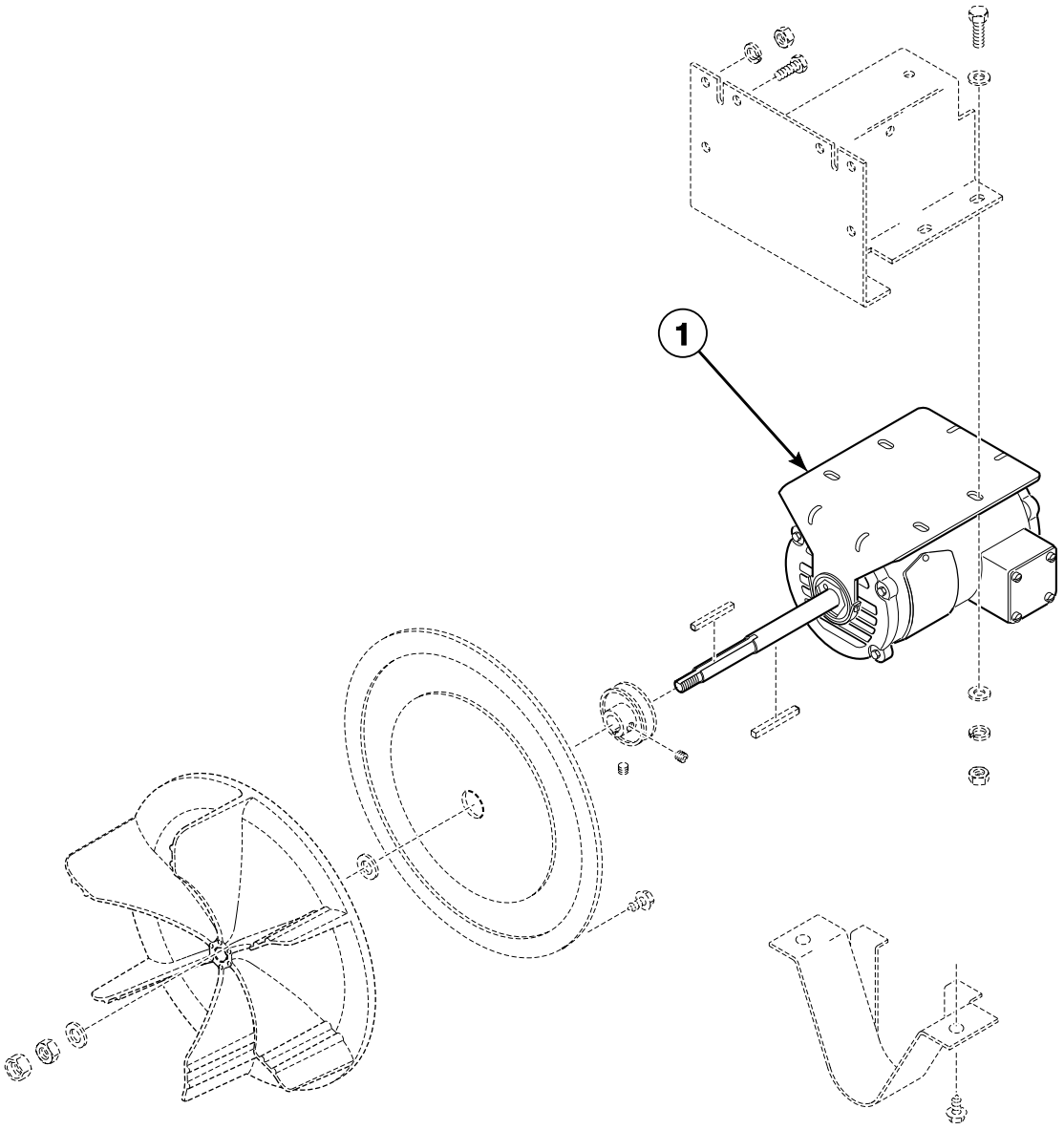

TMB2968P_70421801

© Copyright, Alliance Laundry Systems LLC – DO NOT COPY or TRANSMIT

Fan Motors

REF	PART NO.	DESCRIPTION	COMMENTS
1	44045801P	Motor	Use 44132301 Key for pulley and M400994 Key for fan; Use 70211501 Motor Capacitor; Nonreversing; Gas and steam models with: 120 Volt/60 Hertz/1 Phase and 200-208 or 240 Volt/60 Hertz/1 Phase; Electric models with: 200-208 Volt/60 Hertz/3 Phase and 240 Volt/60 Hertz/3 Phase
	44046101P	Motor	1/2 horsepower; Nonreversing; Gas and steam models with: 200-208 or 240 Volt/60 Hertz/3 Phase, 460-480 Volt/60 Hertz/3 Phase, 200 Volt/50 Hertz/3 Phase, 230-240 Volt/50 Hertz/3 Phase and 380 or 400-415 Volt/50 Hertz/3 Phase; Electric models with: 480 Volt/60 Hertz/3 Phase, 200 Volt/50 Hertz/3 Phase, 380 Volt/50 Hertz/3 Phase and 400-415 Volt/50 Hertz/3 Phase
	44048701P	Motor	Use M410300 Motor Capacitor; Nonreversing; Gas and steam models with: 230-240 Volt/50 Hertz/1 Phase; Electric models with: 240 Volt/50 Hertz/1 or 3 Phase
	44046001P	Fan Motor	1/3 horsepower; Reversing; Gas and steam models with: 200-208 or 240 Volt/50 or 60 Hertz/3 Phase, 460-480 Volt/50 or 60 Hertz/3 Phase, 200 Volt/50 or 60 Hertz/3 Phase, 230-240 Volt/50 Hertz/3 Phase and 380 or 400-415 Volt/50 or 60 Hertz/3 Phase; Electric models with: 480 Volt/50 or 60 Hertz/3 Phase, 380 Volt/50 or 60 Hertz/3 Phase and 400-415 Volt/50 or 60 Hertz/3 Phase
	44045901P	Fan Motor	Use M410301 Motor Capacitor; Reversing; Gas and steam models with: 230-240 Volt/50 Hertz/1 Phase; Electric models with: 240 Volt/50 Hertz/1 or 3 Phase and 200 Volt/50 Hertz/3 Phase
	44045701P	Motor	Use M410296 Motor Capacitor; Reversing; 120/208-240 Volt/60 Hertz

NOTE: Nonreversing motors function as the fan motor and the drive motor.

© Copyright, Alliance Laundry Systems LLC – DO NOT COPY or TRANSMIT

Gas Heater Components

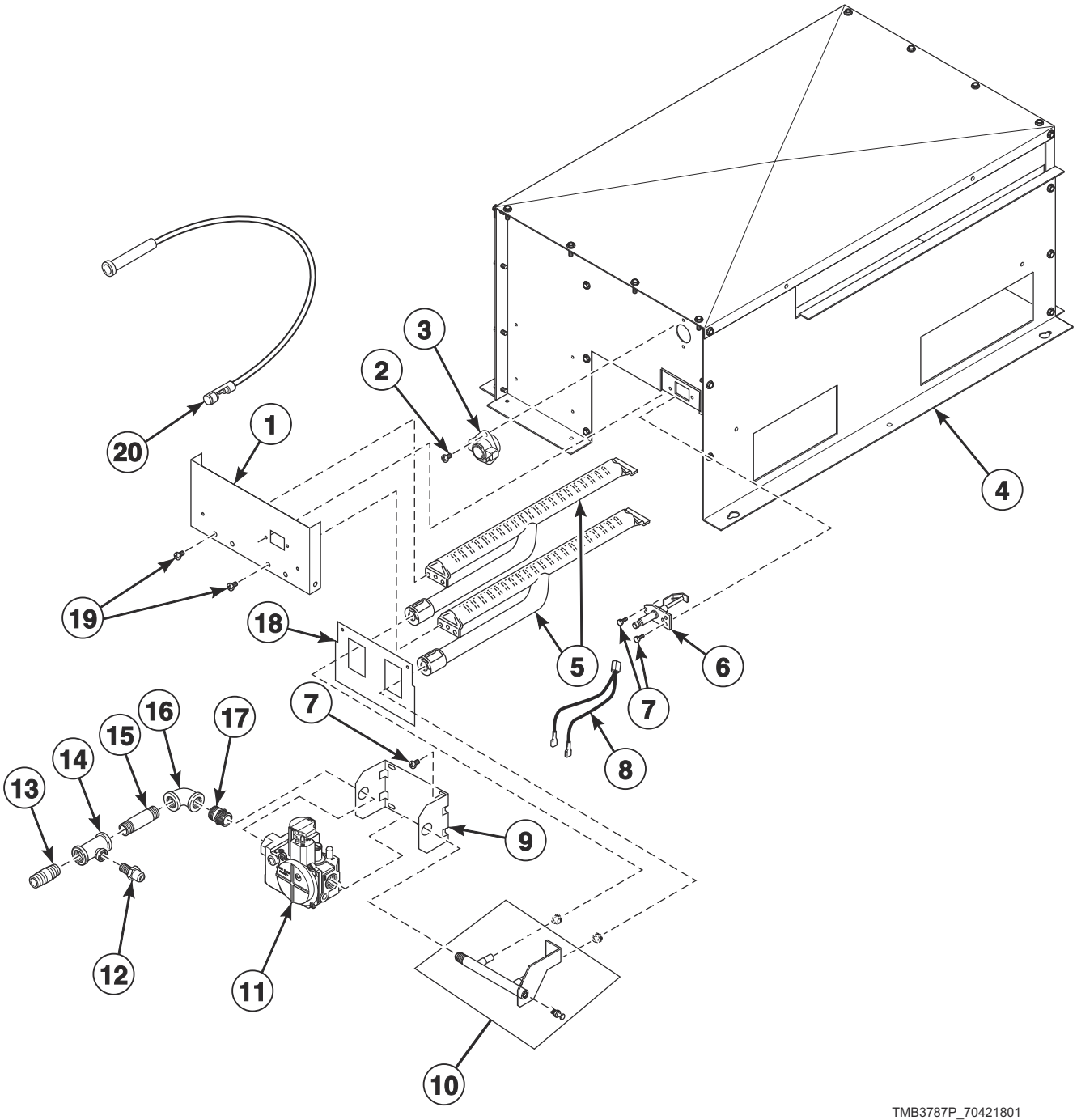

© Copyright, Alliance Laundry Systems LLC – DO NOT COPY or TRANSMIT

Gas Heater Components

REF	PART NO.	DESCRIPTION	COMMENTS
	M4544P3	L.P. Conversion Kit	Natural Gas (N.G.) to Liquid Petroleum Gas (L.P.); CE and Australian models
	M4979P3	L.P. Conversion Kit	N.G. to L.P.; Non-CE and non-Australian models
	M4897P3	L.P. Gas Valve Kit	Non-CE and non-Australian models
	M413468P	Gas Valve Kit	N.G.; Non-CE and non-Australian models
	M4908P3	Valve Replacement Kit	N.G.; CE models; Use to replace valves through 11/30/09
	M4909P3	Valve Replacement Kit	L.P.; CE models; Use to replace valves through 11/30/09
	44305501P	Direct Air Kit	
	70500401	Heat Exchanger	
1	44110201	Burner Support	
2	M402797	Screw	2 required
3	M409433	Limit Thermostat	Non-CE and non-Australian models
	M411938	Manual Reset Thermostat	CE, Australian and Korean models
4	44136004	Gas Stove Assembly	
5	M410541P	Burner Assembly	2 required
6	44328701P	Spark Electrode	
7	430497	Screw	2 required
8	M412997	Harness Assembly	Non-CE and non-Australian models
	M413650	Gas Valve Harness Assembly	Australian models
	70184001	Gas Valve Harness	CE models
9	44175701	Gas Valve Bracket	
10	44263101	Spud Holder Weldment	
11	44181601P	Gas Valve	N.G.; Australian models
	44181602	Gas Valve	L.P.; Australian models
	44178301P	Gas Valve	N.G.; CE models; Use to replace valves starting 12/1/09
	44178302P	Gas Valve	L.P.; CE models; Use to replace valves starting 12/1/09
	44154501P	Gas Valve	N.G.; Non-CE and non-Australian models
	44154502P	Gas Valve	L.P.; Non-CE and non-Australian models
12	44231601	Pressure Fitting	CE and Australian models
13	431486	Pipe Nipple	CE and Australian models
14	44231901	Pipe Tee	CE and Australian models
15	70210201	Pipe Nipple	Non-CE and non-Australian models
	70263801	Pipe Nipple	CE and Australian models
16	70079601	Elbow	
17	431486	Pipe Nipple	
18	44136101	Rear Access Plate	
19	70240301	Screw	4 required
20	44061602P	High Temperature Ignition Lead	Models through 9/16/12; Use with 70367301P or 70367401P Ignition Control
	44239704	High Voltage Suppression Cable	Models starting 9/17/12; Use with 70458601P, 70458701P or 70483201P Ignition Control

NOTE: For CE gas and orifice information, refer to Installation Manual.

© Copyright, Alliance Laundry Systems LLC – DO NOT COPY or TRANSMIT

Burner Orifices for Non-CE Models

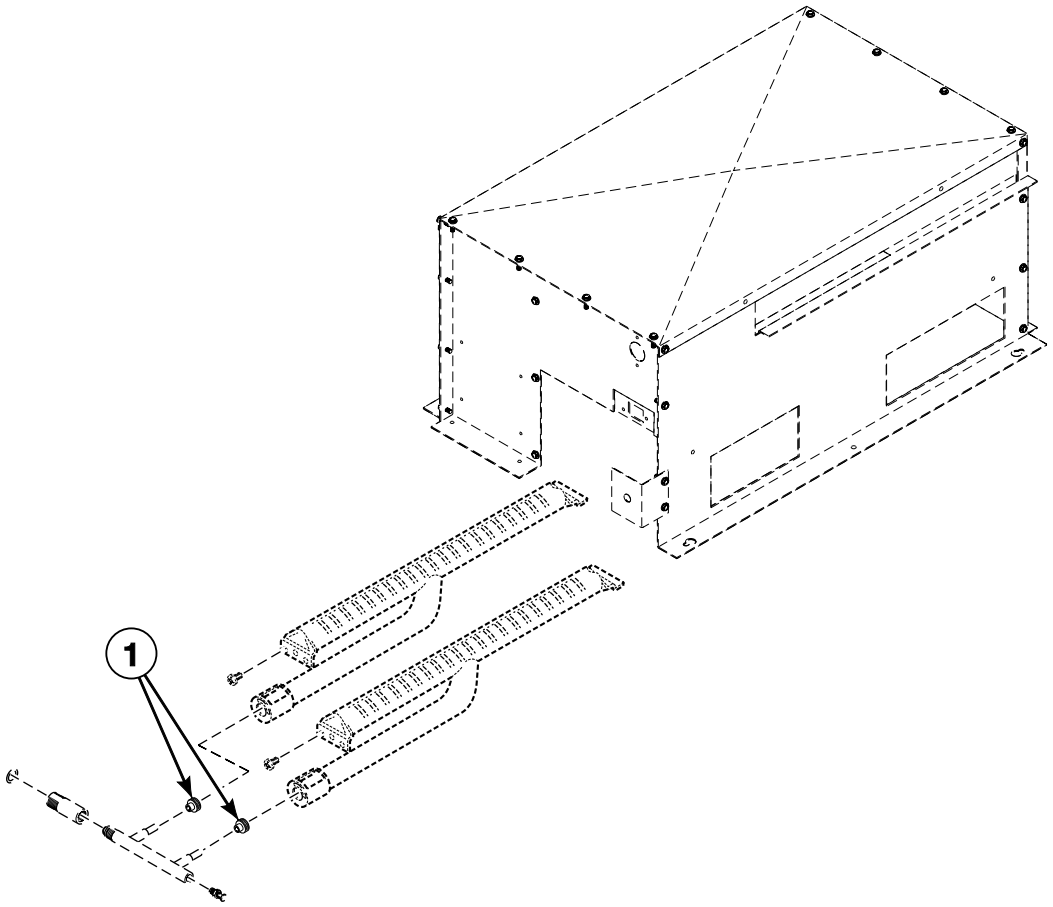

TMB2978P_70421801

© Copyright, Alliance Laundry Systems LLC – DO NOT COPY or TRANSMIT

Burner Orifices for Non-CE Models

REF	PART NO.	DESCRIPTION	COMMENTS
1	70684100	Burner Orifice	Blank
	70684112	Burner Orifice	Liquid Petroleum Gas (L.P.); Drill no. 43 (2.3 mm); 0-4,000 feet; 2 required
	70684110	Burner Orifice	L.P.; Drill no. 44 (2.2 mm); 4,001-6,000 feet; 2 required
	70684109	Burner Orifice	L.P.; Drill no. 45 (2.1 mm); 6,001-8,000 feet; 2 required
	70684108	Burner Orifice	L.P.; Drill no. 46 (2.1 mm); 8,001-10,000 feet; 2 required
	70684136	Burner Orifice	Natural Gas (N.G.); Drill no. 26 (3.7 mm); 0-2,000 feet; 2 required
	70684135	Burner Orifice	N.G.; Drill no. 27 (3.7 mm); 2,001-4,000 feet; 2 required
	70684134	Burner Orifice	N.G.; Drill no. 28 (3.6 mm); 4,001-6,000 feet; 2 required
	70684132	Burner Orifice	N.G.; Drill no. 29 (3.5 mm); 6,001-8,000 feet; 2 required
	70684129	Burner Orifice	N.G.; Drill no. 30 (3.3 mm); 8,001-10,000 feet; 2 required

NOTE: For CE gas and orifice information, refer to Installation Manual.

© Copyright, Alliance Laundry Systems LLC – DO NOT COPY or TRANSMIT

Electric Heater Components

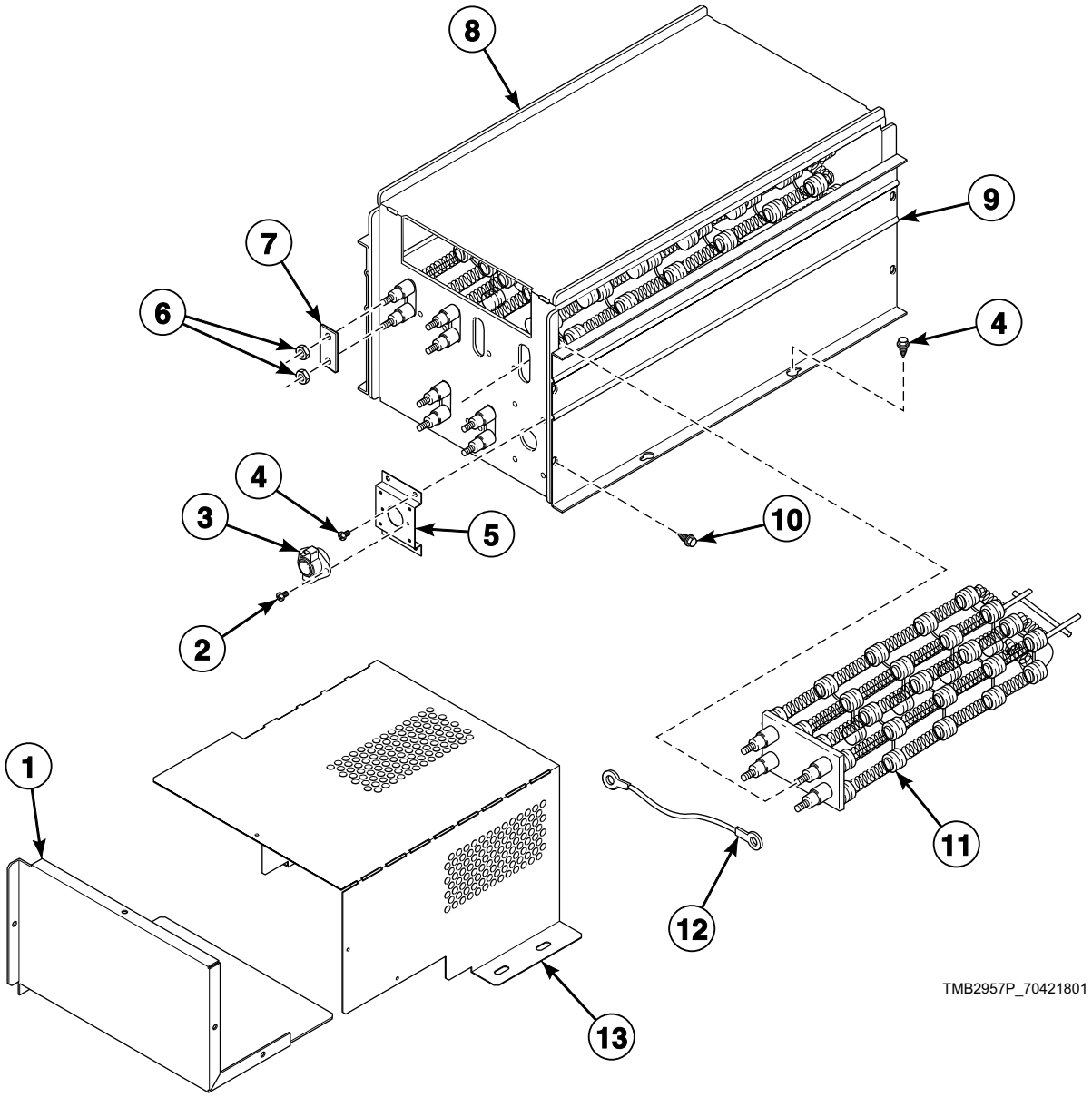

© Copyright, Alliance Laundry Systems LLC – DO NOT COPY or TRANSMIT

Electric Heater Components

REF	PART NO.	DESCRIPTION	COMMENTS
	44305501P	Direct Air Kit	
	70500401	Heat Exchanger	
1	44154901	Electric Accessory Box Cover	
2	33562	Screw	
3	M410542	Limit Thermostat	
4	430497	Screw	
5	70356301	Switch Bracket	
6	70054	Nut	
7	M400866	Jumper Bar	380 Volt/50 Hertz/3 Phase, 400-415 Volt/50 Hertz/3 Phase and 480 Volt/60 Hertz/3 Phase
	M400869	Jumper Strip	3 required for 480 Volt/60 Hertz/3 Phase; 6 required for all others
8	44153301	Heater Box Cover	
9	44154801	Heater Side	
10	70240301	Screw	
11	M410939P	Heater Element	3 required; 10 kW; 240 Volt heater element for 230-240, 400-415 and 480 Volt/3 Phase models
	M410940P	Heater Element	3 required; 10 kW; 208 Volt heater element for 200-208 Volt/3 Phase models; Non-CE and non-Australian models
	M410941P	Heater Element	3 required; 10 kW 220 Volt heater element for 380 and 440 Volt/3 Phase models
	M412955P	Heater Element	3 required; 7 kW; 240 Volt heater element for 230-240 Volt/1 Phase models; Non-CE and non-Australian models
12	M412287	Jumper Wire Assembly	1 required for 380 Volt/50 Hertz/3 Phase and 400-415 Volt/50 Hertz/3 Phase; 2 required for 480 Volt/60 Hertz/3 Phase
13	44154701	Electric Accessory Box Wrap	

© Copyright, Alliance Laundry Systems LLC – DO NOT COPY or TRANSMIT

Airflow Switch Assembly

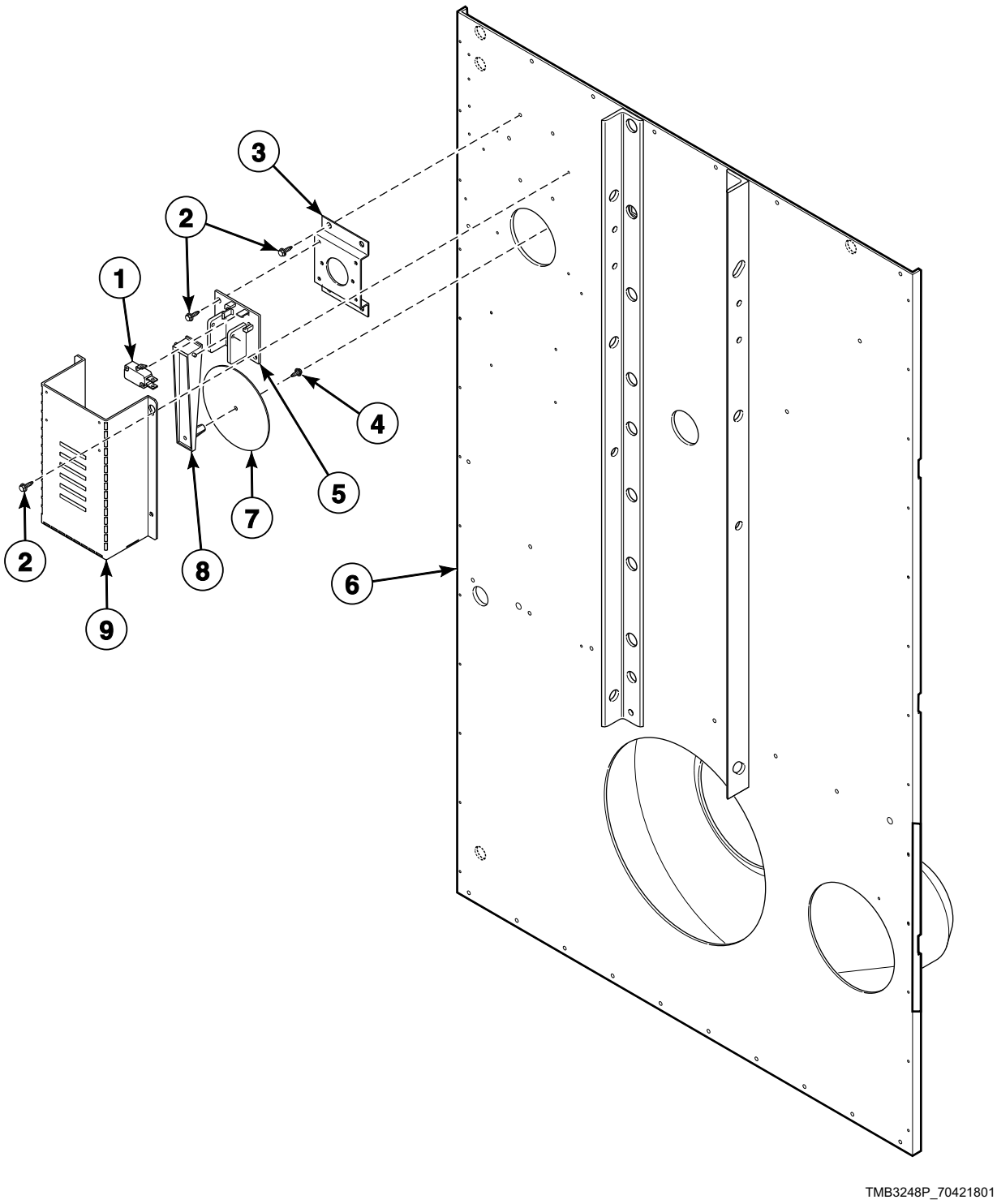

TMB3248P_70421801

© Copyright, Alliance Laundry Systems LLC – DO NOT COPY or TRANSMIT

Airflow Switch Assembly

REF	PART NO.	DESCRIPTION	COMMENTS
	70429602	Airflow Switch Assembly	Includes items 1, 4, 5, 7 and 8
1	70411901	Switch	
2	430497	Screw	6 required
3	70356301	Switch Bracket	
4	430757	Screw	
5	70319602	Airflow Switch and Arm Bracket	
6	44170401P	Rear Panel Assembly	
	N/A	Rear Panel Assembly	Bolt on angle option
7	70319202	Airflow Switch Vane	
8	70319401	Airflow Switch Arm	
9	44143501	Airflow Switch Cover	

N/A = Part no longer available

© Copyright, Alliance Laundry Systems LLC – DO NOT COPY or TRANSMIT

Steam Heater and Valve

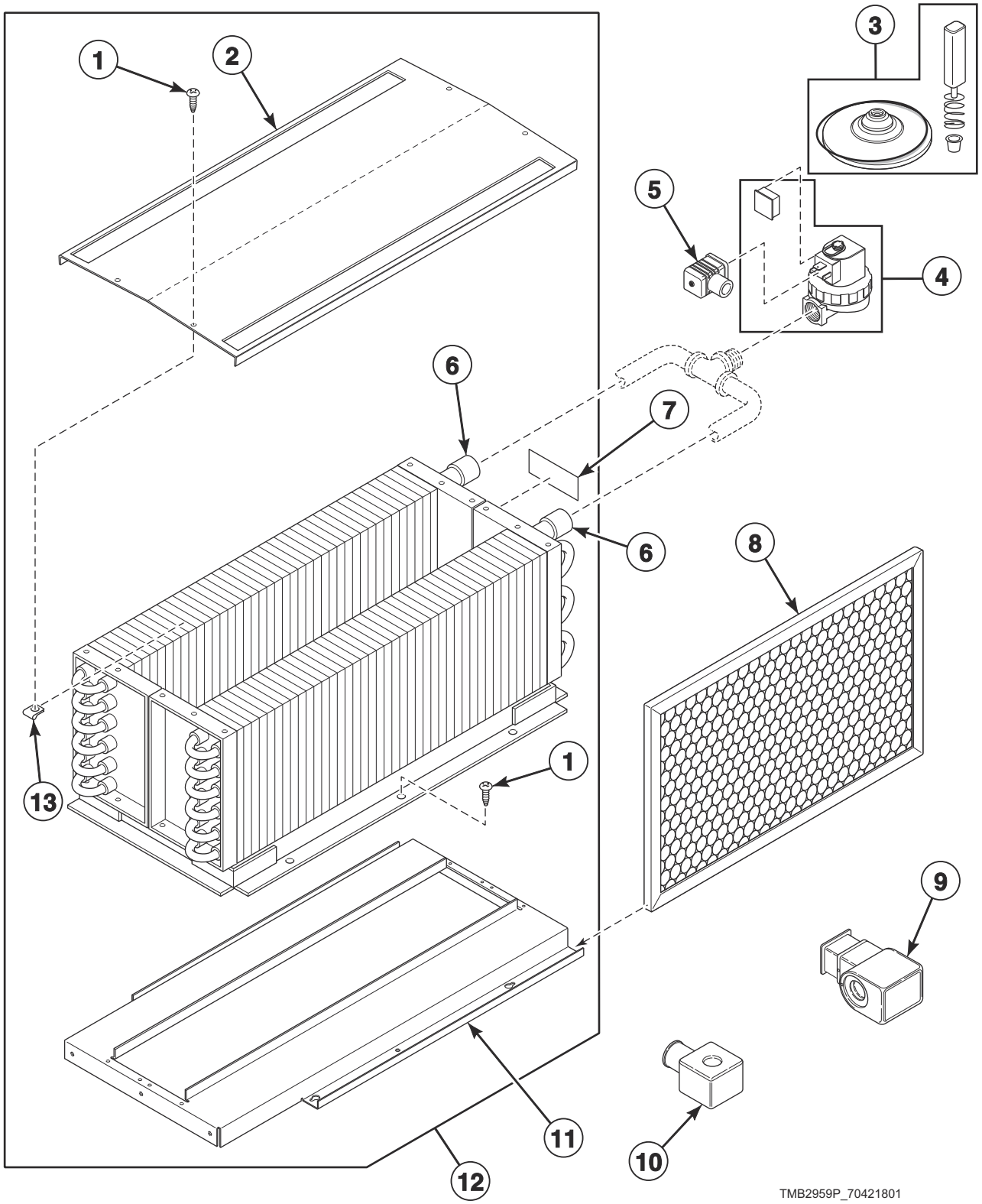

© Copyright, Alliance Laundry Systems LLC – DO NOT COPY or TRANSMIT

Steam Heater and Valve

REF	PART NO.	DESCRIPTION	COMMENTS
	M405188	Screw	Thermal oil models; 8 required
	M414759	Top Cover	Thermal oil models
	M412997	Harness Assembly	
	F8514801	Valve Coil	Use with F8322902 Steam Valve
	F8382301	DIN Valve Adapter Kit	Use with F8322902 Steam Valve
1	23008	Screw	4 required
2	M400828	Low Pressure Steam Cover	
3	70351021P	Steam Valve Rebuild Kit	All models except thermal oil models; Parker; Use with 70351001P and 70351002P Steam Valves
	F8379502	Valve Rebuild Kit	All models except thermal oil models; Asco; Use with F8322902 and F8322903 Steam Valves
4	F8322903	Steam Valve	All models except thermal oil models; 50 Hertz
	F8521701	Valve Kit	All models except thermal oil models; 60 Hertz; Parker valve replacement kit
	F8322902	Steam Valve	Models starting Serial No. 1009000100; All models except thermal oil models; 60 Hertz; Asco
5	70370301P	Solenoid Valve DIN Connector	All models except thermal oil models
6	M400637P	Steam Coil	All models except thermal oil models; 2 required
7	902303	Steam Pressure Label	All models except thermal oil models; Near inlet to indicate maximum steam pressure
8	44104201	Air Filter	Fiberglass; 2 required; Non-CE and non-Australian models
	44172001	Filter	Aluminum; 2 required; All other models
9	70351012	Steam Solenoid	All models except thermal oil models
10	70351011P	Steam Solenoid	All models except thermal oil models
11	44007501	Steam Stand Box	
12	44020401P	Steam Heater Assembly	All models except thermal oil models
13	36020	Nut	4 required

© Copyright, Alliance Laundry Systems LLC – DO NOT COPY or TRANSMIT

Rotation Sensor

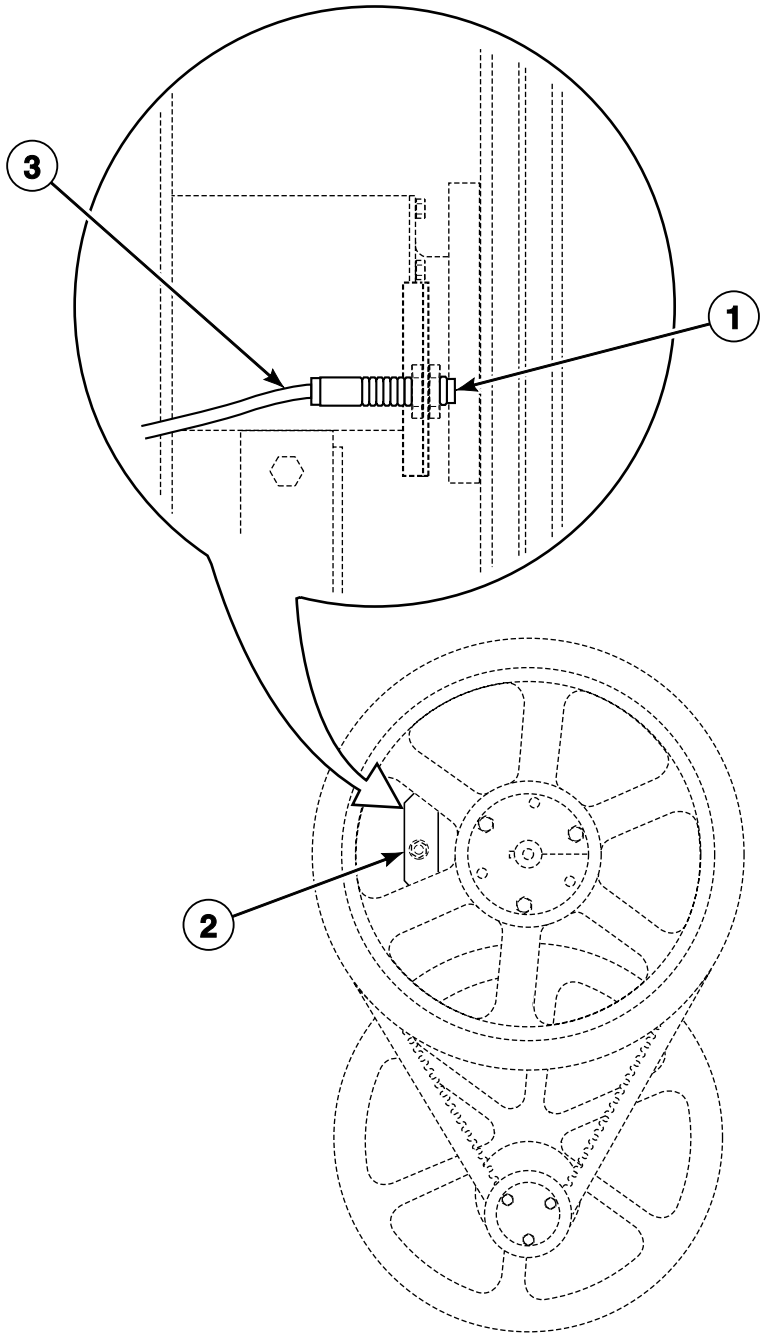

TMB2009P_70421801

© Copyright, Alliance Laundry Systems LLC – DO NOT COPY or TRANSMIT

Rotation Sensor

REF	PART NO.	DESCRIPTION	COMMENTS
	7009P	Rotation Sensor Kit	Includes item 1, 70476101 Rotation Sensor Harness and 44044401 Rotation Sensor Bracket
1	F8066201	Rotation Sensor	
2	44207501	Bracket	Models with EO, RE, RU and UO control suffixes
	44044501	Proximity Bracket	Models with 3B, 3O, 3V, 3W, 3X, DO, DV, DX and R3 control suffixes
3	F8066401	Rotation Sensor Harness	Models with EO, RE, RU and UO control suffixes
	70476101	Rotation Sensor Harness	Models with 3B, 3O, 3V, 3W, 3X, DO, DV, DX and R3 control suffixes

© Copyright, Alliance Laundry Systems LLC – DO NOT COPY or TRANSMIT

Duct and Damper Assembly

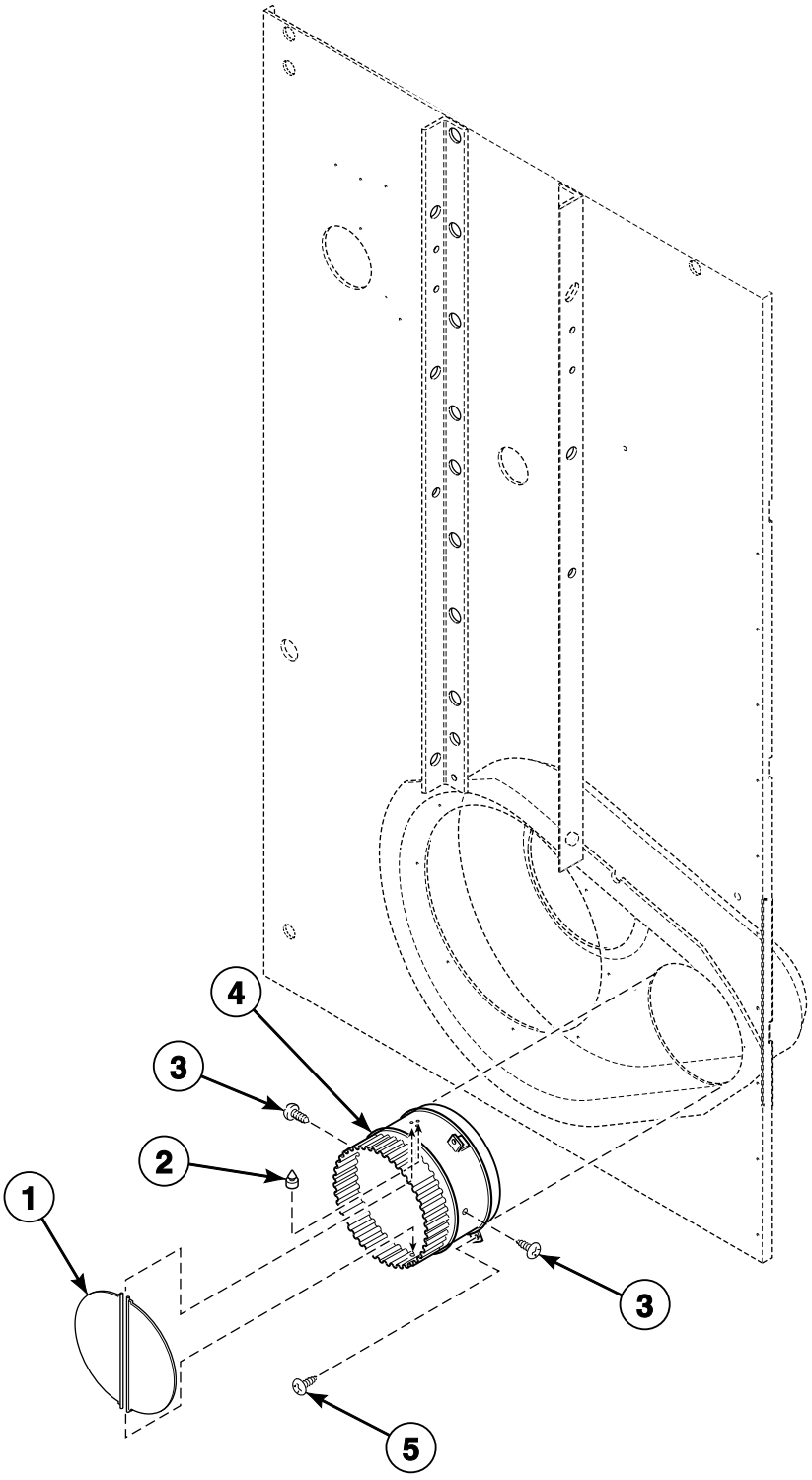

TMB2960P_70421801

© Copyright, Alliance Laundry Systems LLC – DO NOT COPY or TRANSMIT

Duct and Damper Assembly

REF	PART NO.	DESCRIPTION	COMMENTS
1	M400503	Thimble Vane Assembly	2 required
2	M400795	Bumper	
3	M405188	Screw	2 required
4	M412288	Exhaust Thimble Assembly	
5	M411072	Screw	3 required

© Copyright, Alliance Laundry Systems LLC – DO NOT COPY or TRANSMIT

Rear Panel Assembly

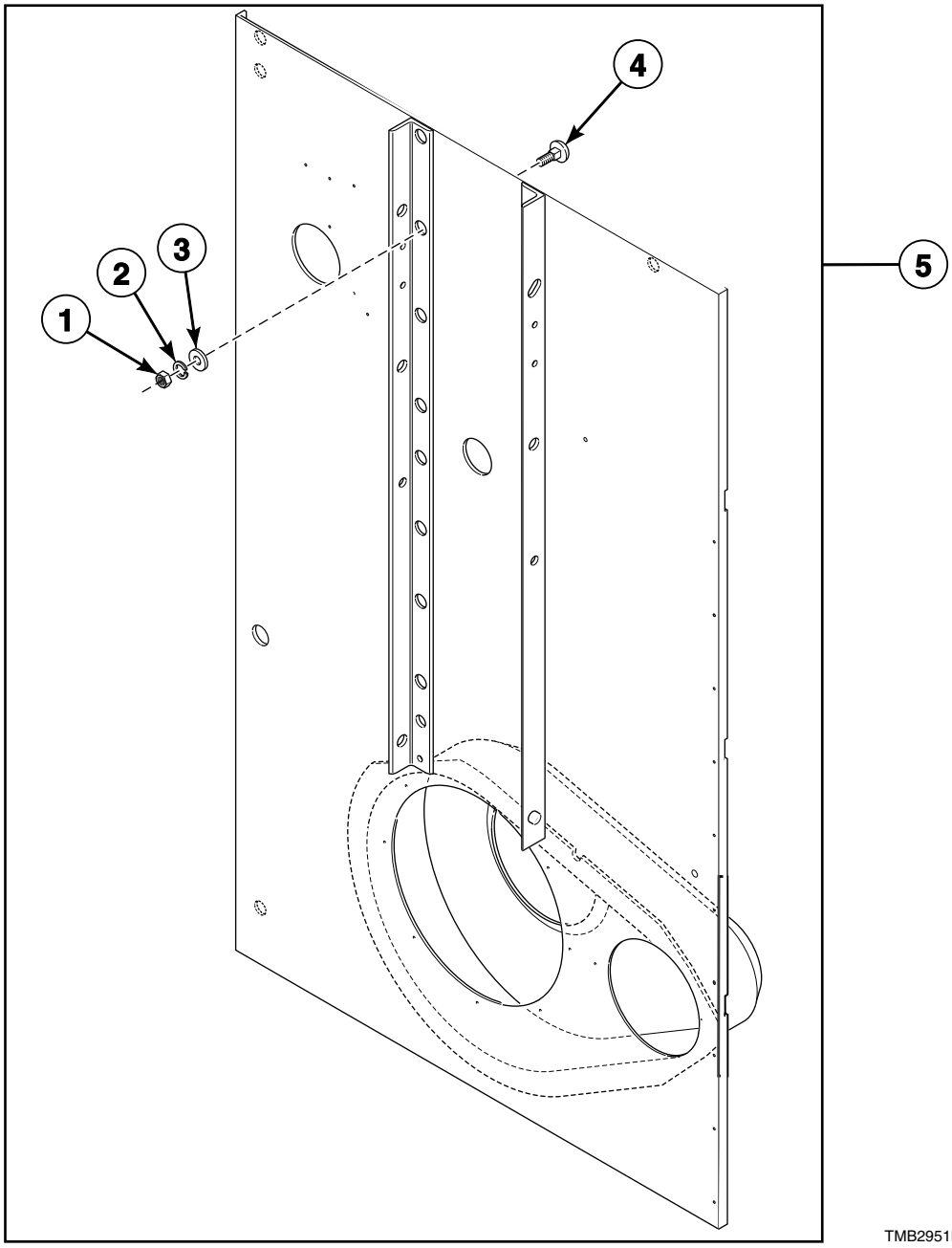

TMB2951P_70421801

© Copyright, Alliance Laundry Systems LLC – DO NOT COPY or TRANSMIT

Rear Panel Assembly

REF	PART NO.	DESCRIPTION	COMMENTS
	44170401P	Rear Panel Assembly	
1	20274	Nut	14 required
2	M400014	Washer	14 required
3	M400080	Washer	14 required
4	M405503	Bolt	14 required
5	N/A	Rear Panel Assembly	Bolt on angle option

N/A = Part no longer available

© Copyright, Alliance Laundry Systems LLC – DO NOT COPY or TRANSMIT

Control Tray Wrap Components

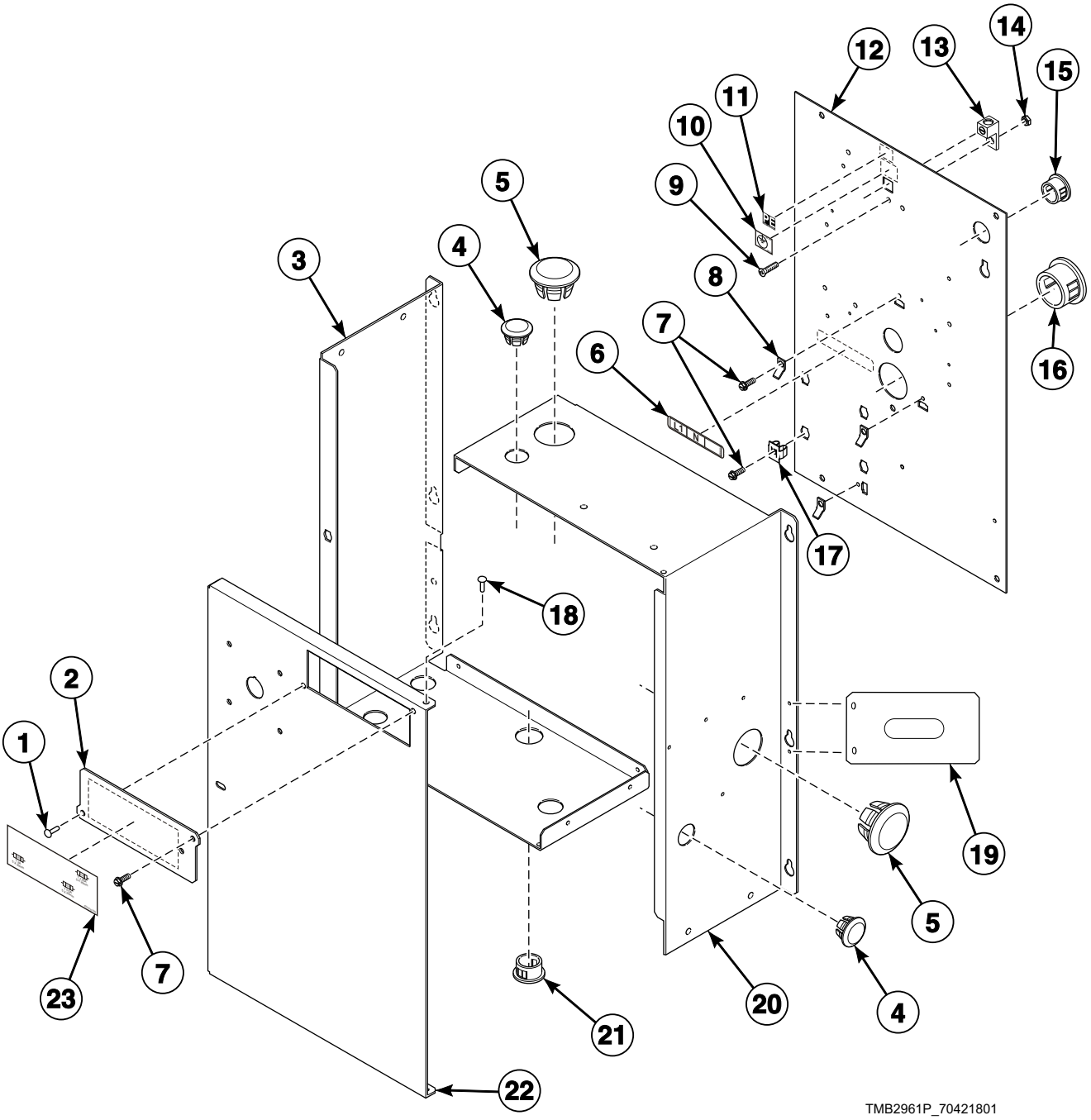

© Copyright, Alliance Laundry Systems LLC – DO NOT COPY or TRANSMIT

Control Tray Wrap Components

REF	PART NO.	DESCRIPTION	COMMENTS
1	70058501	Pop Rivet	
2	70313301	Fuse Cover	
3	44159001	Contactor Box Side	
4	M400985	Plug	Gas models nonreversing 2 required, reversing 1 required; Steam and electric models nonreversing 3 required, reversing 2 required
5	F8223801	Hole Plug	Gas and steam models 2 required; Electric models 1 required
6	70218801	Wire Label	L1, N
	70218701	Wire Label	L1, L2, L3
	70219001	Wire Label	L1, N, L2; Gas and steam models
7	F8206901	Screw	4 required
8	00177	Male Tab Terminal	3 required
9	F430909	Screw	
10	F230739	Ground Decal	
11	M412096	Earth Terminal Sticker	
12	44133701	Contactor Box Base	
13	M411283	Ground Lug Connector	
14	F430232	Nut	
15	44071501	Snap Bushing	Gas models
16	M405340	Snap Bushing	Gas and steam models 1 required; Electric models 2 required
17	70030501	Expansion Clip	5 required
18	70058502	Pop Rivet	2 required
19	44175801	Pipe Bracket	
20	44158901	Contactor Box Side	
21	70178701	Snap Bushing	
22	44134001	Contactor Box Cover	Gas and steam non-CE models
	44134002	Contactor Box Cover	Gas and steam CE models
	44134003	Contactor Box Cover	Electric models
23	70337301	Fuse Label	3 fuses
	70337201	Fuse Label	4 fuses; Models with less than 380 Volts
	70337401	Fuse Label	4 fuses; Models with 380 Volts or higher

© Copyright, Alliance Laundry Systems LLC – DO NOT COPY or TRANSMIT

Control Tray Fuses

MODELS WITH LESS THAN 380 VOLTS/1 PHASE

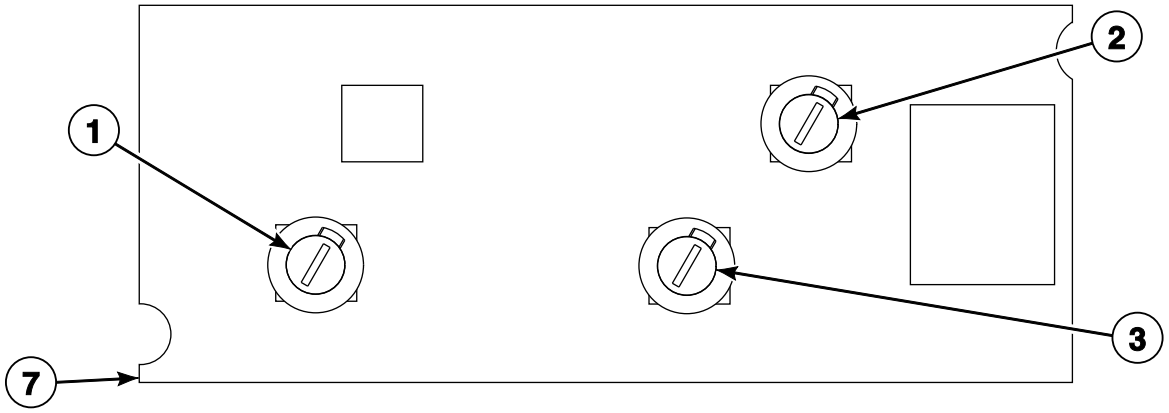

MODELS WITH LESS THAN 380 VOLTS/3 PHASE

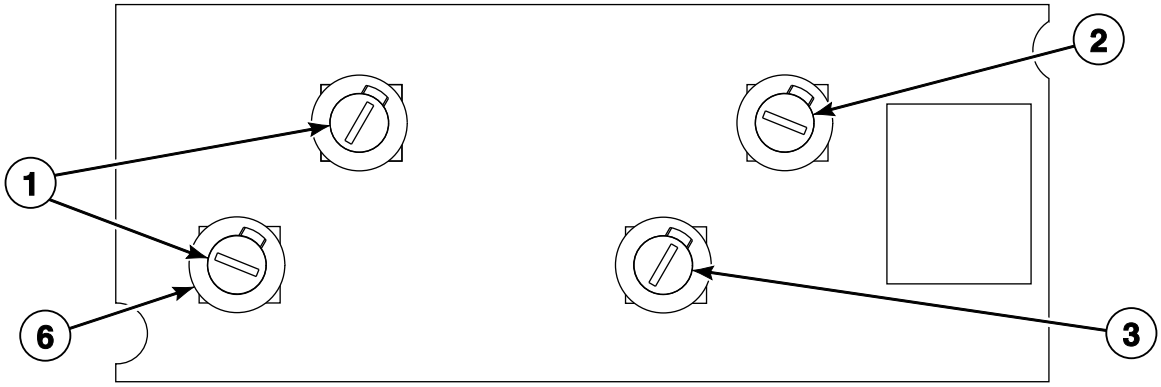

MODELS WITH 380 VOLTS OR HIGHER/3 PHASE

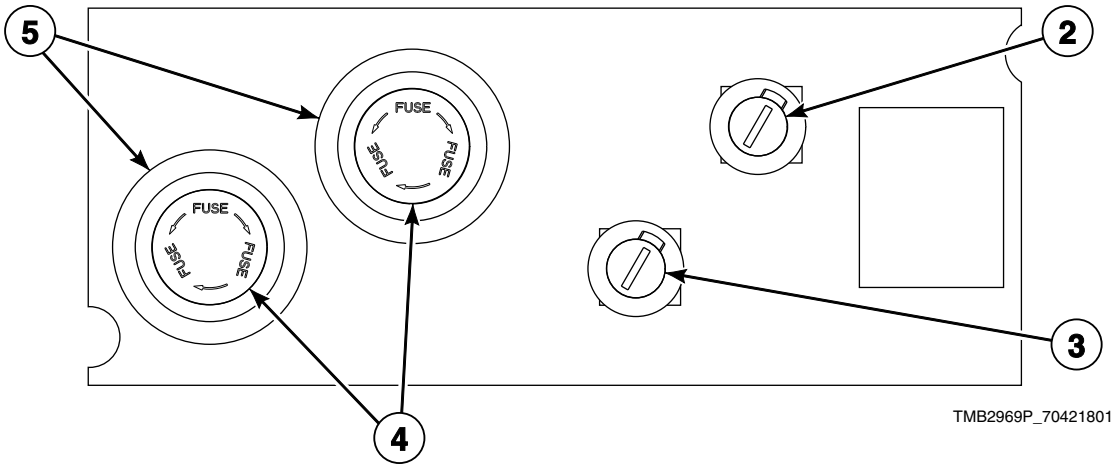

TMB2969P_70421801

© Copyright, Alliance Laundry Systems LLC – DO NOT COPY or TRANSMIT

Control Tray Fuses

REF	PART NO.	DESCRIPTION	COMMENTS
1	70406701	Fuse	2 Amp
2	70406501	Fuse	1.25 Amp
3	70406601	Fuse	3.5 Amp
4	44310001	Fuse	.5 Amp
5	44155601P	Fuse Holder	
6	70329401P	Fuse Holder Body	
	70329501	Fuse Holder Cap	
7	70313602	Fuse Bracket	Models with 380 Volts or higher
	70306901	Fuse Bracket	Models with less than 380 Volts

© Copyright, Alliance Laundry Systems LLC – DO NOT COPY or TRANSMIT

Control Tray Harnesses for Gas and Steam Models

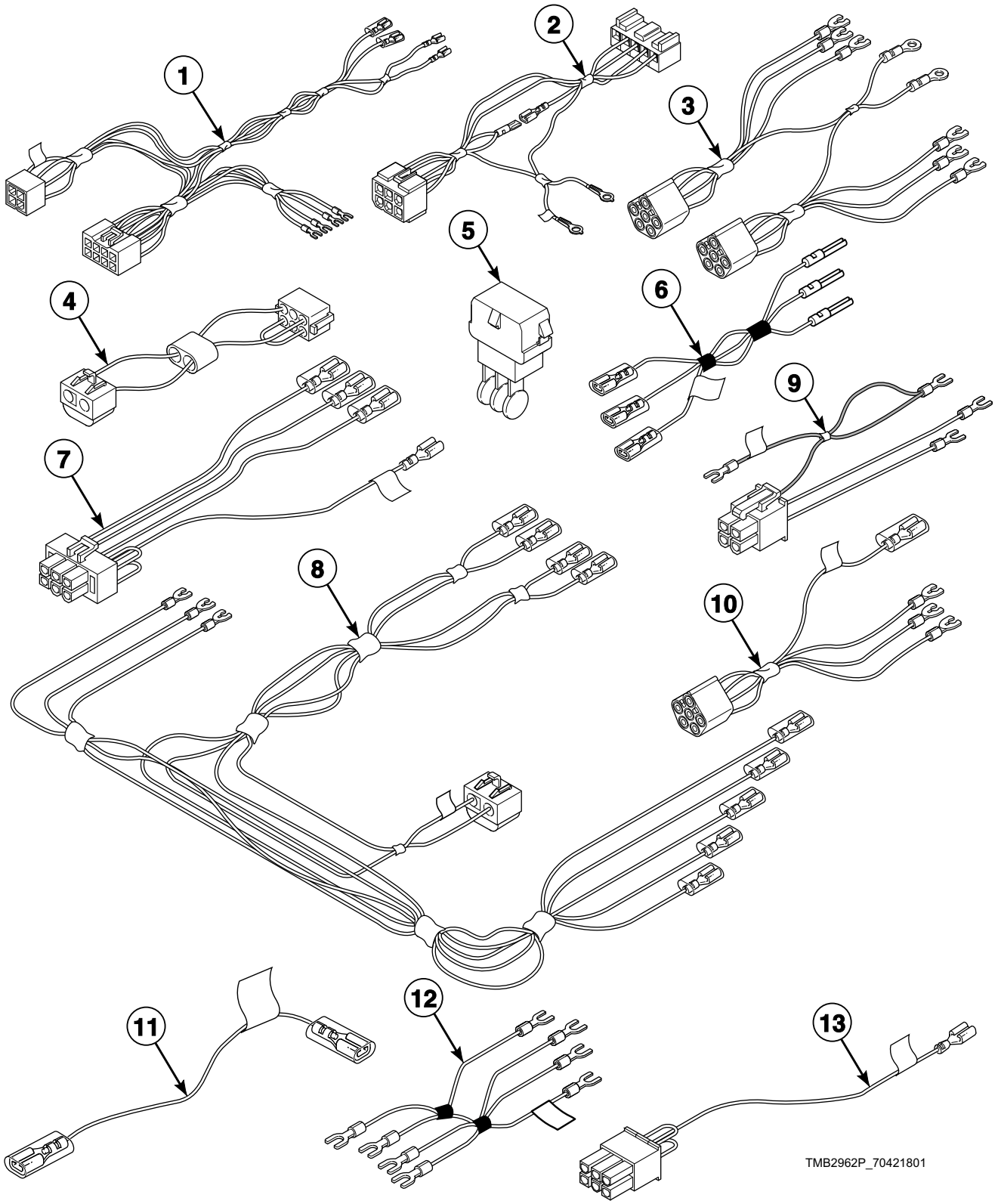

© Copyright, Alliance Laundry Systems LLC – DO NOT COPY or TRANSMIT

Control Tray Harnesses for Gas and Steam Models

REF	PART NO.	DESCRIPTION	COMMENTS
1	44136701P	Junction Box Harness	
2	44186701	Ignition Control Harness	Non-CE gas models
	44186901	Ignition Control Harness	CE and Australian gas models; Models with EO, RE, RU and UO control suffixes
	44136601P	Ignition Control Harness	CE and Australian gas models; Models with all other control suffixes
3	44139901P	Motor Contactor Harness	1 Phase; Reversing
	44142601P	Motor Contactor Harness	3 Phase; Reversing
4	M413506	Jumper Harness Assembly	208 Volt
	M413507	Jumper Configuration Assembly	240 Volt
	M413508	Jumper Harness Assembly	380 Volt
	M413510	Jumper Configuration Assembly	480 Volt
5	M413863	Network Capacitor Assembly	
6	70342101	Gas Disconnect Harness	CE models
7	44143401P	Network Capacitor Harness Assembly	
8	44136201P	Power Harness	3 Phase models with 380 Volts or higher
	44136301P	Power Harness	3 Phase models with less than 380 Volts
	44139801P	Power Harness	1 Phase; Models through 7/8/12
	44250001	Power Harness	1 Phase; Models starting 7/9/12
	44266501	Power Harness	120 Volt/1 Phase
9	44139601P	Reversing Contactor Harness	
10	44137001P	Motor Contactor Harness	3 Phase
	44136401	Motor Contactor Harness	1 Phase
11	70389901	Steam Stove Limit Bypass Harness	Steam models
12	44157401	Reversing Contactor Jumper Wire	1 Phase; Upper
	44255001	Reversing Contactor Jumper Harness	120 Volt/1 Phase; Upper
	44139501	Reversing Contactor Jumper	1 Phase; Lower
	44136801	Reversing Contactor Jumper Assembly	Upper
	44136901	Reversing Contactor Jumper Assembly	Lower
13	44142801	Steam Configuration Harness	Steam models

© Copyright, Alliance Laundry Systems LLC – DO NOT COPY or TRANSMIT

Control Tray Components for Gas Models

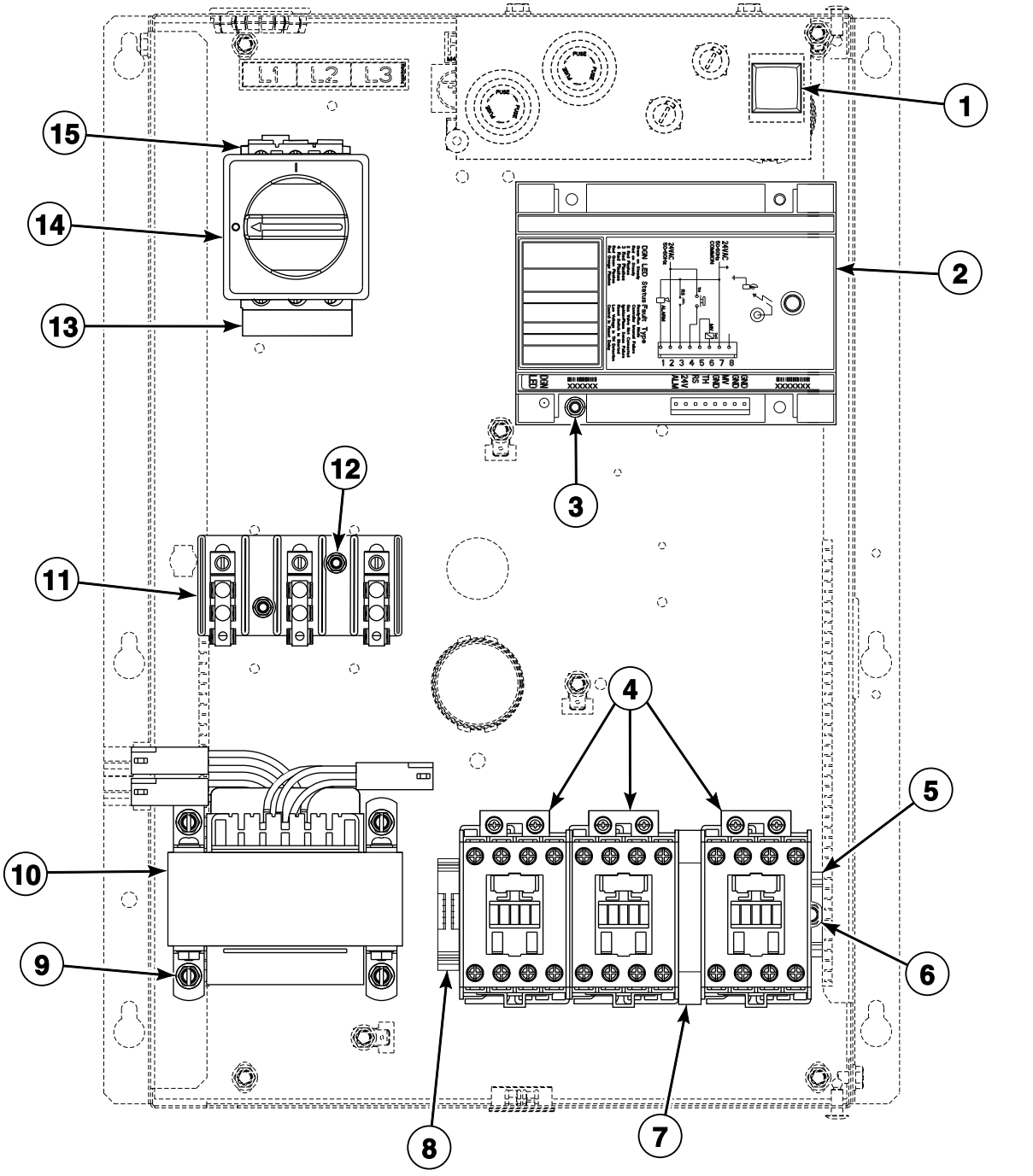

TMB3093P_70421801

© Copyright, Alliance Laundry Systems LLC – DO NOT COPY or TRANSMIT

Control Tray Components for Gas Models

REF	PART NO.	DESCRIPTION	COMMENTS
1	M413431	Pushbutton Switch	CE and Australian models
2	44264601	Ignition Control Kit	Non-CE and non-Australian models; Models through 9/16/12; Use with 44239704 High Voltage Suppression Cable
	70458601P	Ignition Control	Non-CE and non-Australian models; Models starting 9/17/12; Use with 44239704 High Voltage Suppression Cable
	44264701	Ignition Control Kit	CE and Australian models; Models through 9/16/12; Use with 44239704 High Voltage Suppression Cable
	70483201P	Ignition Control	CE and Australian models; Models starting 9/17/12; Use with 44239704 High Voltage Suppression Cable
3	38272	Screw	
4	70323701P	Contactor	Nonreversing 1 required, reversing 3 required
5	M412693	Din Rail	
6	430497	Screw	2 required
7	F330186P	Interlock Contactor	Reversing
8	70121001	End Stop	
9	M411072	Screw	4 required
10	M414228P	Transformer	Multitap; 100-240 Volt
	M414229P	Transformer	Multitap; 380-480 Volt
	44074401	Transformer	Dual secondary; 440 Volt
	M414230P	Transformer	Single secondary; 120 Volt
	M414312P	Transformer	Dual secondary; 120 Volt
11	430642	Terminal Block	Use 70333001 Terminal Block Shield to protect terminal block
12	51783	Screw	2 required
13	M412366	Finger Guard	CE models through 7/31/11
14	M412208	Handle	CE models through 7/31/11; 44160701 Extension Handle attaches to operator handle; M412368 Door Interlock mounts under operator handle
	44160701	Extension Handle	
	M412368	Door Interlock	
15	M412187P	Mounting Switch Base	CE models through 7/31/11; Use 51782 Screw to attach

© Copyright, Alliance Laundry Systems LLC – DO NOT COPY or TRANSMIT

Control Tray Components for Steam Models

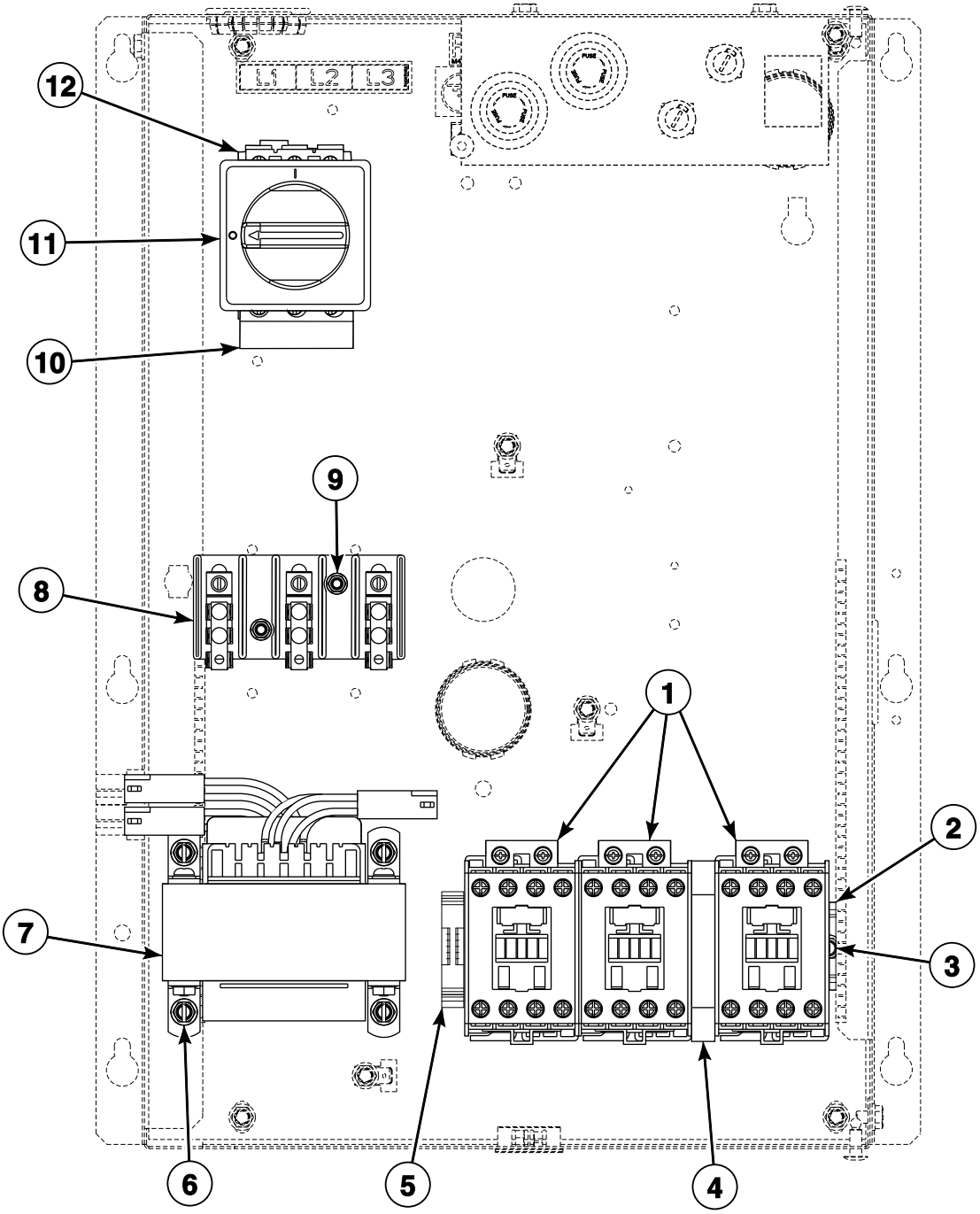

© Copyright, Alliance Laundry Systems LLC – DO NOT COPY or TRANSMIT

Control Tray Components for Steam Models

REF	PART NO.	DESCRIPTION	COMMENTS
1	70323701P	Contactor	Nonreversing 1 required, reversing 3 required
2	M412693	Din Rail	
3	430497	Screw	2 required
4	F330186P	Interlock Contactor	Reversing
5	70121001	End Stop	
6	M411072	Screw	4 required
7	M414228P	Transformer	Multitap; 100-240 Volt
	M414229P	Transformer	Multitap; 380-480 Volt
	44074401	Transformer	Dual secondary; 440 Volt
	M414230P	Transformer	Single secondary; 120 Volt
	M414312P	Transformer	Dual secondary; 120 Volt
8	430642	Terminal Block	Use 70333001 Terminal Block Shield to protect terminal block
9	51783	Screw	2 required
10	M412366	Finger Guard	CE models through 7/31/11
11	M412208	Handle	CE models through 7/31/11; 44160701 Extension Handle attaches to operator handle; M412368 Door Interlock mounts under operator handle
	44160701	Extension Handle	
	M412368	Door Interlock	
12	M412187P	Mounting Switch Base	CE models through 7/31/11; Use 51782 Screw to attach

© Copyright, Alliance Laundry Systems LLC – DO NOT COPY or TRANSMIT

Control Tray Harnesses for Electric Models

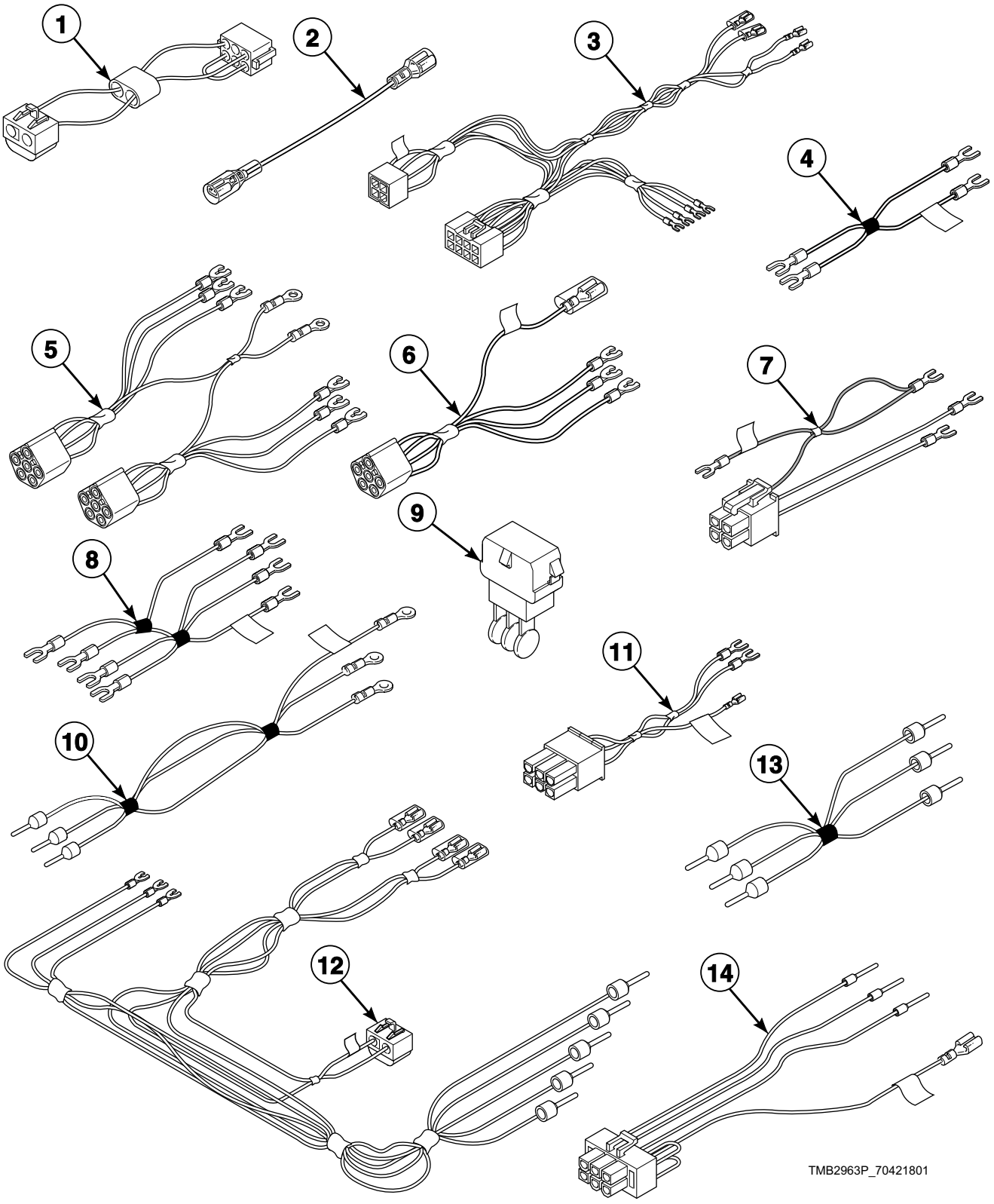

© Copyright, Alliance Laundry Systems LLC – DO NOT COPY or TRANSMIT

Control Tray Harnesses for Electric Models

REF	PART NO.	DESCRIPTION	COMMENTS
1	M413506	Jumper Harness Assembly	208 Volt
	M413507	Jumper Configuration Assembly	240 Volt
	M413508	Jumper Harness Assembly	380 Volt
	M413509	Jumper Harness Assembly	415 Volt
	M413510	Jumper Configuration Assembly	480 Volt
2	44014501	Jumper Wire	6 gauge; 4.5 inches
3	44136701P	Junction Box Harness	
4	70355801P	Electric Contactor Jumper Set Harness	
5	44139901P	Motor Contactor Harness	1 Phase; Reversing
	44142601P	Motor Contactor Harness	3 Phase; Reversing
6	44137001P	Motor Contactor Harness	3 Phase
	44136401	Motor Contactor Harness	1 Phase
7	44139601P	Reversing Contactor Harness	
8	44157401	Reversing Contactor Jumper Wire	1 Phase; Upper
	44139501	Reversing Contactor Jumper	1 Phase; Lower
	44136801	Reversing Contactor Jumper Assembly	Upper
	44136901	Reversing Contactor Jumper Assembly	Lower
9	M413863	Network Capacitor Assembly	
10	44151801P	Heater Cable Set	H1-H3
	44151901P	Heater Cable Set	H4-H6
11	44150701P	Electric Configuration Harness	
12	44150901	Power Harness	3 Phase models with less than 380 Volts
	44151001	Power Harness	3 Phase models with 380 Volts or higher
	44139801P	Power Harness	1 Phase
13	44151101	Cable Set	CB1 Power; CE models
	44151201	Cable Set Assembly	CB2 Power; CE models
	44151301	Cable Set Assembly	CB3 Power; CE models
	44151401	Cable Set Assembly	CB2 to HC2
	44151601	Cable Set	PDB to HC1
	44151701	Cable Set	PDB to HC2
	44155301	Cable Set Assembly	CB3 to HC1
14	44152001	Network Capacitor Harness Assembly	

© Copyright, Alliance Laundry Systems LLC – DO NOT COPY or TRANSMIT

Control Tray Components for Non-CE Electric Models

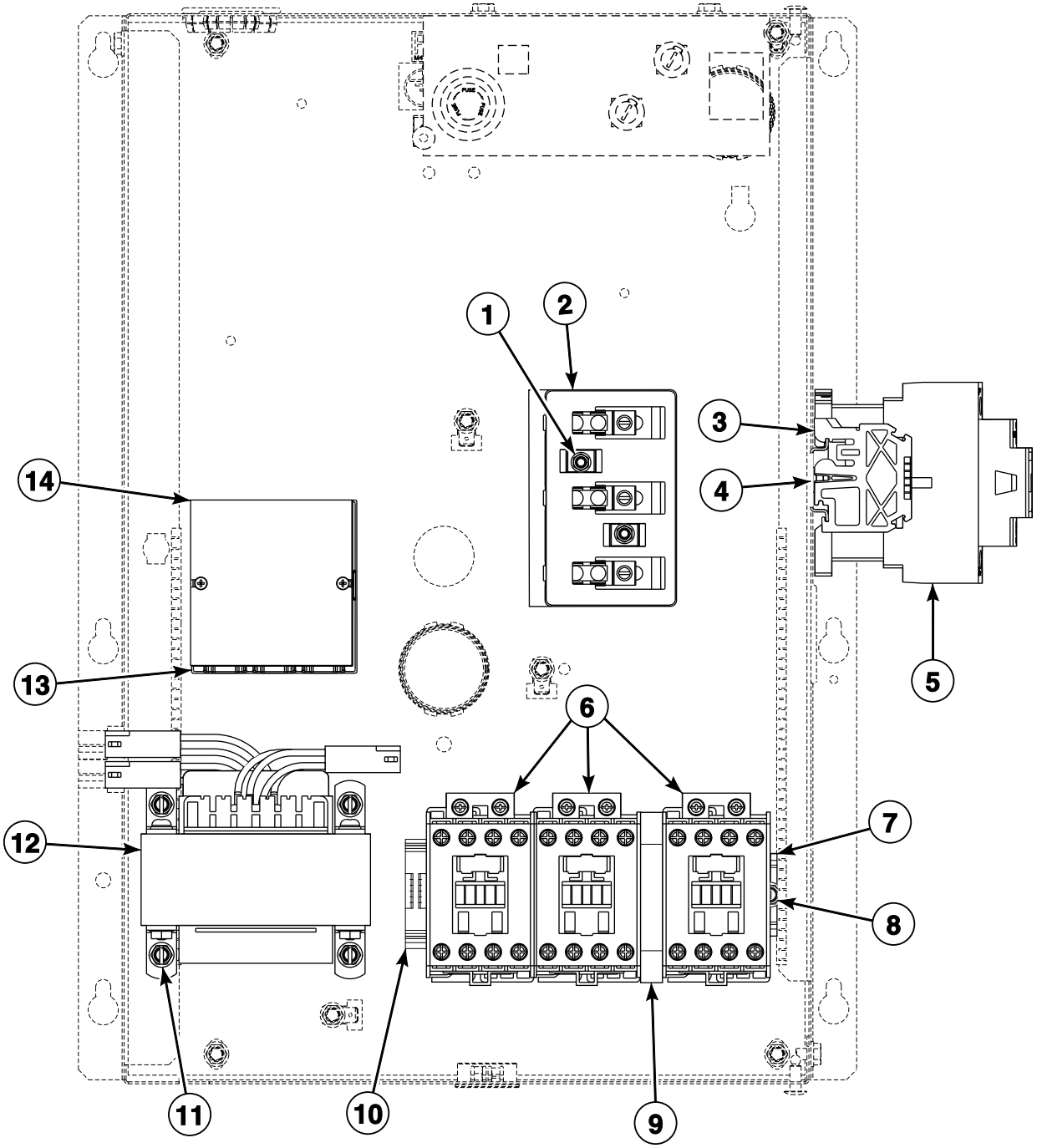

TMB3098P_70421801

© Copyright, Alliance Laundry Systems LLC – DO NOT COPY or TRANSMIT

Control Tray Components for Non-CE Electric Models

REF	PART NO.	DESCRIPTION	COMMENTS
1	51783	Screw	240 Volt/50 Hertz/1 Phase; 2 required
2	430642	Terminal Block	240 Volt/50 Hertz/1 Phase; Use 70333001 Terminal Block Shield to protect terminal block
3	70121001	End Stop	2 required
4	M412690	Din Rail	
5	70343301P	Contactor	Heat; Models with 380 Volts or higher 1 required; models with less than 380 Volts 2 required
6	70323701P	Contactor	Motor; Nonreversing 1 required; reversing 3 required
7	M412693	Din Rail	
8	430497	Screw	2 required
9	F330186P	Interlock Contactor	Reversing
10	70121001	End Stop	
11	M411072	Screw	4 required
12	M414228P	Transformer	Multitap; 100-240 Volt
	M414229P	Transformer	Multitap; 380-480 Volt
	44074401	Transformer	Dual secondary; 440 Volt
13	M413865	Power Distribution Block	Use 39733 Screw to attach
14	44014901P	Power Distribution Block Cover	Mounts over top of item 13 for protection

© Copyright, Alliance Laundry Systems LLC – DO NOT COPY or TRANSMIT

Control Tray Components for CE Electric Models

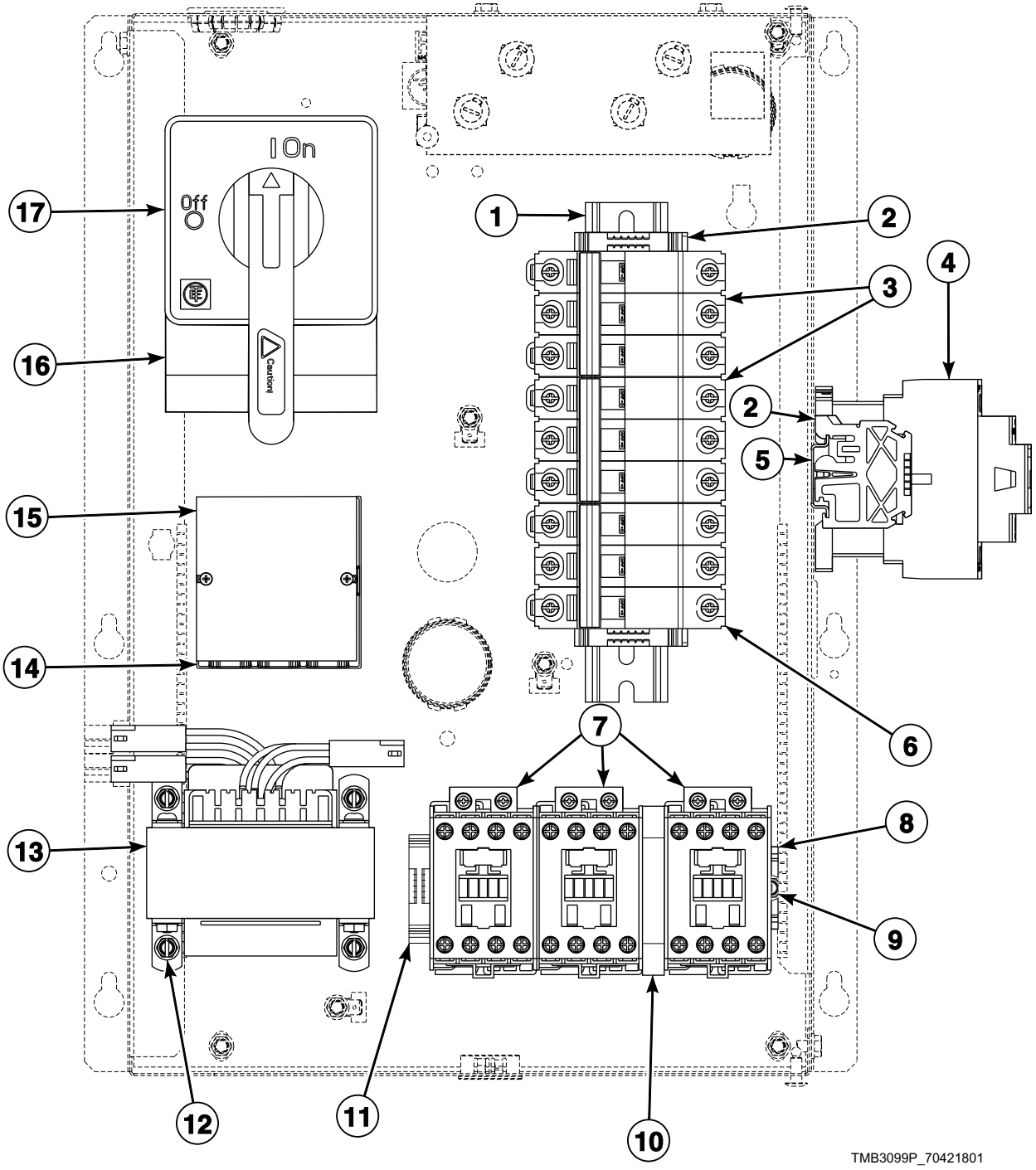

© Copyright, Alliance Laundry Systems LLC – DO NOT COPY or TRANSMIT

Control Tray Components for CE Electric Models

REF	PART NO.	DESCRIPTION	COMMENTS
	44314401	Time Delay Interlock Kit	
1	N/A	Din Rail	Use 2 of 430497 Screw to attach
2	70121001	End Stop	3 required
3	M412408P	Circuit Breaker	2 required for 230 Volt/50 Hertz/3 Phase
4	70343301P	Contactor	Heat; Models with 380 Volts or higher 1 required; models with less than 380 Volts 2 required
5	M412690	Din Rail	Use 2 of 430497 Screw to attach
6	M412407P	Circuit Breaker	
7	70323701P	Contactor	Motor; Nonreversing 1 required; reversing 3 required
8	M412693	Din Rail	Use 2 of 430497 Screw to attach
9	430497	Screw	2 required
10	F330186P	Interlock Contactor	Reversing
11	70121001	End Stop	
12	M411072	Screw	4 required
13	M414228P	Transformer	Multitap; 100-240 Volt
	M414229P	Transformer	Multitap; 380-480 Volt
	44074401	Transformer	Dual secondary; 440 Volt
14	M413865	Power Distribution Block	Use 39733 Screw to attach
15	44014901P	Power Distribution Block Cover	Mounts over top of item 14 for protection
16	M412367	Finger Guard	Models through 7/31/11
17	70268001	Handle	Models through 7/31/11; M412371P Extension Handle attaches to operator handle; M412369 Door Interlock mounts under operator handle; Whole assembly mounts to M412186 Mounting Base which is attached with 2 of 33562 Screw
	M412371P	Extension Handle	
	M412369	Door Interlock	
	M412186	Mounting Switch Base	

N/A = Part no longer available

© Copyright, Alliance Laundry Systems LLC – DO NOT COPY or TRANSMIT

Notes

© Copyright, Alliance Laundry Systems LLC – DO NOT COPY or TRANSMIT

Parts Index

A

Access Panel Trim
70399402 63

Adjustable Buzzer
D505447 23

Air Filter
44104201 109

Airflow Switch and Arm Bracket
70319602 107

Airflow Switch Arm
70319401 107

Airflow Switch Assembly
70429602 107

Airflow Switch Cover
44143501 107

Airflow Switch Vane
70319202 107

B

Baffle
44004901 71
44005201 71
44065501 71

Baffle Gasket
70015701 71

Ball Bearing
M401375P 91
44041901P 79

Base Harness Assembly
44137501P 65

Bearing
F100136P 79

Bearing Retainer
M401370 91

Belt
M401182P 87, 89
M412090 ..... 83, 85
M412981 ..... 83, 85

Belt Guard
M413008 97
M413541 81

Belt Guard Assembly
44132401 ..... 87, 89
44132402 ..... 83, 85
44132408 89
44132409 85

Belt Idler Assembly
44209001 89
44209002 85

Blower
44127401P 97

Blower Inlet Cone
70014101 69

Bolt
M400650 79
M401393 ..... 83, 85, 89, 97
M405503 115

Bottom Pan
44000601P 71

Bracket
44065901 17
44207501 111
44263501 25

Bumper
M400795 113

Burner Assembly
M410541P 101

Burner Orifice
70684100 103
70684108 103
70684109 103
70684110 103
70684112 103
70684129 103
70684132 103
70684134 103
70684135 103
70684136 103

Burner Support
44110201 101

Bushing
M412086P 83
M412885P 83
M412917P 83

Bypass Harness
70364103 ..... 21, 25, 27, 33, 43, 51, 53, 55, 59

C

Cable Set
44151101 127
44151601 127
44151701 127

Cable Set Assembly
44151201 127
44151301 127
44151401 127
44155301 127

Card Reader and Bracket Assembly
D510068P 33

Card Reader Overlay
70334201 ..... 33, 35
70334301 ..... 33, 35, 51

Central Pay Harness
70484601 ..... 31, 41, 49
70491501 25

Central Pay Interface Control Assembly
209/00471/75 25

Circuit Board Support
D501523 17

Circuit Breaker
M412407P 131
M412408P 131

Circuit Plug Housing, 1
44370401 95

Clean Lint Compartment Sticker
70114001 67

N/A items do not appear in index.

© Copyright, Alliance Laundry Systems LLC – DO NOT COPY or TRANSMIT

Coin Box
F160673P 71
Coin Chute Assembly
70296401 71
Coin Cover Overlay
70246301 ..... 29, 33, 49
Coin Drop
38963P 37
70256402P 37
70429001 37
70441601P 37
Coin Drop Assembly
CK114 37
210195 37
210196 37
38462P 37
38463 37
38464P 37
38467 37
38472 37
38475 37
38519 37
38521 37
39157 37
44039701P 37
44039702 37
44039703 37
44039704 37
44039705 37
44039706 37
44039707 37
70281102 37
70283102 37
70441602 37
70447301 37
70471601 37
70482401 37
Coin Drop Kit
CK077 37
CK097 37
CK122 39
CK123 37
Coin Drop Overlay Kit
70321201 29
Coin Drop Switch
70286101P 37
Coin Identification Paper
38725 37
Coin Vault Assembly
70180101 71
Coin Vault Switch Harness
70364104P 19, 25, 31, 41, 49, 59
Coin Vault Trim
70117501 59
70117502 59
70117504 59
Communication Board
210095P 47
210097 47
Communication Connector
210099 47
Communication Wire Harness Assembly
800246 45
Cone Plate
44150201 69
Contact Base
F8538101 57
Contact Block Switch
F200233401P 57
Contact Switch
F8069501 57
Contactor
70323701P 123, 125, 129, 131
70343301P 129, 131
Contactor Box Base
44133701 117
Contactor Box Cover
44134001 117
44134002 117
44134003 117
Contactor Box Side
44158901 117
44159001 117
Control
44063801P 17
Control Assembly
D511867P 29, 33
D512202P 21
D513139P 19
D514273P 29, 33
44013601P 27
70434101P 53, 55
70437102P 55
70437103P 55
70437104P 55
70437105P 55
70450501P 41, 43
70450502P 49, 51
70450503 ..... 41, 43
70450504 ..... 49, 51
70454001P 53
70454101P 55
70462305P 25
70462306P 25
70462365P 25
70462372 25
70503101P 21
70503702P 55
Control Board
254/00070/00P 25
Control Box Assembly
44180101 15
Control Box Base
44065301 17
Control Box Cover
44065201 17
Control Box Housing
44065101 17
Control Box Top
44065401 17
Control Chassis Mounting Bracket
70357901 ..... 19, 21
Control Conversion Kit
M4797P3 23
Control Door Assembly
70363401 19
Control Door Latch
431318 71
Control Harness
44100101P 21

N/A items do not appear in index.

© Copyright, Alliance Laundry Systems LLC – DO NOT COPY or TRANSMIT

Control Harness Assembly
44141601P ... 17
Control Housing Cover
70307001 ... 15
70307002 ... 15, 45
Control Kit
D505905P ... 47
70228401P ... 27
Control Overlay
44194801 ... 41
70410001 ... 41
70410002 ... 41
70449501 ... 41
70473001 ... 49
70473002 ... 49
70473003 ... 51
Control Panel
44000117BP ... 61
44000118P ... 61
44000121DG ... 61
44000121WP ... 61
44000122* ... 61
44000124 ... 61
44000125 ... 61
44040002 ... 61
44040003* ... 61
44040004 ... 61
44040005* ... 61
44040007B ... 61
44040008B ... 61
44040011* ... 61
44040013 ... 61
44040014 ... 61
44040015LG ... 61
44040015W ... 61
Control Panel and Door Hinge Kit
M4776P3 ... 61, 73, 75
Control Panel Harness
44240301 ... 53, 55
70335301P ... 27
70341901P ... 23
70342001P ... 23
70358701 ... 33
70367001P ... 21
70369001 ... 19
70382701P ... 27
70398401 ... 19
70410401P ... 41, 43, 49, 51
70429101P ... 31, 33
70429201P ... 31
70485301 ... 25
70489901 ... 25
Control Panel Harness Assembly
70341801P ... 23
Control Plate and Studs Assembly
70440901 ... 55
Control Plate Assembly
44040901 ... 23
44041001 ... 23
70175805 ... 27
70360601 ... 21
70475601 ... 53
70497201 ... 33, 35, 43, 51
Control Plate Kit
44050701P ... 25
70291001P ... 29, 33, 41, 49
Control Trim
44016401 ... 59
70529401 ... 59
70529402 ... 59
Cover Plate
M401362 ... 97
Cylinder and Trunnion Assembly
44057401P ... 77
44057402P ... 77
44057403 ... 77
44057404 ... 77
44089101 ... 77
44131002 ... 77
44131102 ... 77
44195601 ... 77
44195602 ... 77
44195603 ... 77
44195604 ... 77
44195605P ... 77
44195606 ... 77
44195607 ... 77
Cylinder Assembly
44089001 ... 77
44130802 ... 77
44196301 ... 77
44196302 ... 77
44196303 ... 77
Cylinder Kit
44057001P ... 77
44057101P ... 77
Cylinder Motor Harness
44137101P ... 81
44139701P ... 81
Cylinder Rib Assembly
44191201 ... 77

D

Deflector Cover
44162301 ... 69
Din Rail
M412690 ... 129, 131
M412693 ... 123, 125, 129, 131
DIN Valve Adapter Kit
F8382301 ... 109
Direct Air Kit
44305501P ... 101, 105
Display Assembly
D512218P ... 21
Door Assembly
44028902P ... 73
44028903 ... 73
44028905P ... 73
44029101 ... 73
44058102P ... 73
44058104P ... 73
44112101 ... 73
44266701P ... 73
44266702P ... 73
44292301BP ... 73
44292301LGP ... 73
44320202 ... 73
70407401P ... 73
Door Glass
44008401P ... 73

N/A items do not appear in index.

© Copyright, Alliance Laundry Systems LLC – DO NOT COPY or TRANSMIT

44008402P 73
Door Glass Installation Tool
M4221P4 73
Door Handle
M400133 73
44007901 73
44057702 73
44263801 73
70538103 73
Door Hinge Assembly
44075203* 75
44075204 75
44075208B 75
44075208LG 75
44075211 75
Door Hinge Lug Assembly
44035001 ..... 59, 75
44035002 ..... 59, 75
Door Interlock
M412368 ..... 123, 125
M412369 131
Door Latch
M401223 59
Door Ring and Handle Assembly
44112001 73
44326007B 73
44326007LG 73
Door Ring Assembly
44326001 73
44326002 73
44326003B 73
44326004B 73
44326004HG 73
44326005 73
44326006 73
Door Ring Gasket
44008201P 73
Door Seal Kit
70211902P 73
Door Switch Actuator Kit
70215001P 75
Door Switch Harness
44137601 59
Double V Sheave
M412916 83
Drive Motor
44253201P 81
Drive Rivet
M400713 17
Drum Idler Wheel Assembly
430619 ..... 89, 93

E

Earth Terminal Sticker
M412096 117
Elbow
70079601 101
Electric Accessory Box Cover
44154901 105
Electric Accessory Box Wrap
44154701 105
Electric Configuration Harness
44150701P 127
Electric Contactor Jumper Set Harness
70355801P 127
Electronic Coin Drop Assembly
70294103P 37
70294104 37
70294107 37
70294111 37
70294117 37
70294119 37
70294120 37
70294121 37
70513306 37
70513311 37
Electronic Coin Drop Kit
CK099 ..... 37, 39
CK100 39
CK101 39
CK103 39
CK109 39
CK113 39
CK115 39
CK116 39
CK117 39
CK118 39
CK119 39
CK120 39
CK121 39
CK125 39
Electronic Control
44037801P 23
Emergency Stop Contact Harness
70364105P 57
Emergency Stop Harness
70364106P 57
Emergency Stop Label
44012901 57
Emergency Stop Pushbutton
F200233500 57
End Stop
70121001 ..... 123, 125, 129, 131
Ethernet Gateway Kit
NK320 ..... 41, 43, 49, 51, 53
Exhaust Thimble Assembly
M412288 113
Expansion Clip
70030501 ..... 59, 117
Extension Handle
M412371P 131
44160701 ..... 123, 125
Extension Spring
M412120 ..... 89, 93

F

Fan Motor
44045901P 99
44046001P 99
Fan Motor Harness
44137201P 97
44169901 97
Felt Pad
M402144 77
Ferrite Core Assembly
M413930P 27

N/A items do not appear in index.

© Copyright, Alliance Laundry Systems LLC – DO NOT COPY or TRANSMIT

Fill Hose
F200116 17
Fill Hose Kit
38349P 17
Filter
44172001 109
Finger Guard
M412366 ..... 123, 125
M412367 131
Foam Gasket
70414101 ..... 19, 21, 23, 25, 27, 29, 33, 35, 41, 43, 49, 51
Front Panel
44052517DG 63
44052517LG 63
44052518DG 63
44052518LG 63
44052519DG 63
44052520DG 63
44052521 63
Front Panel Assembly
44077901*P 63
44077903WP 63
44077904P 63
44077905*P 63
44077906P 63
44077907*P 63
44077908P 63
44077917 63
44077918 63
44077919 63
44077920 63
Front Pillar
44001201 65
Fuse
44310001 119
70406501 ..... 27, 119
70406601 119
70406701 119
Fuse Bracket
70306901 119
70313602 119
Fuse Cover
70313301 117
Fuse Holder
44155601P 119
Fuse Holder Body
70329401P 119
Fuse Holder Cap
70329501 119
Fuse Label
70337201 117
70337301 117
70337401 117

G

Gas Disconnect Harness
70342101 121
Gas Stove Assembly
44136004 101
Gas Valve
44154501P 101
44154502P 101
44178301P 101
44178302P 101
44181601P 101
44181602 101
Gas Valve Bracket
44175701 101
Gas Valve Harness
70184001 101
Gas Valve Harness Assembly
M413650 101
Gas Valve Kit
M413468P 101
Graphic Overlay
44050501 25
44050502 25
44239401 25
44239402 25
44239403 25
44240501 25
Ground Decal
F230739 117
Ground Lug Connector
M411283 117
Guard Extension
44222501 ..... 85, 89
Guide Rail
M412476 ..... 83, 85, 87, 89, 93

H

Handle
M412208 ..... 123, 125
70268001 131
Handle and Caps Assembly
70154405P 67
70154406 67
Handle Bar
70399501B 73
Handle Bumper
70407202 67
70407210 67
Harness Assembly
M412997 ..... 101, 109
Heat Exchanger
70500401 ..... 101, 105
Heater Box Cover
44153301 105
Heater Cable Set
44151801P 127
44151901P 127
Heater Element
M410939P 105
M410940P 105
M410941P 105
M412955P 105
Heater Side
44154801 105
High Temperature Ignition Lead
44061602P 101
High Voltage Suppression Cable
44239704 101
Hinge Cam Kit
M4772P3 75

N/A items do not appear in index.

© Copyright, Alliance Laundry Systems LLC – DO NOT COPY or TRANSMIT

M4773P3 75
Hold-Down Clip
35865 69
Hole Plug
F8223801 117
Hose
44073301 17
Hose Clamp
36801 17
Hose Fitting
44069101 17
Housing and Trunnion Assembly
M4644P3 79
M4645P3 79
44336302 79

I

Idler Arm
44102701 ..... 89, 93
Idler Assembly
44107202 89
Idler Housing
M412612 91
Idler Housing Assembly
44107101 ..... 85, 89
Idler Housing Kit
917P3 91
943P3P 93
Idler Shaft
M414241 91
Idler/Belt Assembly Kit
942P3P 93
Ignition Control
70458601P 123
70483201P 123
Ignition Control Harness
44136601P 121
44186701 121
44186901 121
Ignition Control Kit
44264601 123
44264701 123
Insulation
44020601 61
44150102 71
44150103 71
Interlock Contactor
F330186P 123, 125, 129, 131

J

Jumper Bar
M400866 105
Jumper Calibration Wire
70084304 27
70084305 27
70324604 .... 19, 21, 25, 31, 33, 41, 43, 49, 51, 53, 55
Jumper Configuration Assembly
M413507 ..... 121, 127
M413510 ..... 121, 127
Jumper Harness Assembly
M413506 ..... 121, 127
M413508 ..... 121, 127
M413509 127
Jumper Set Assembly
44042701 23
44042801 23
Jumper Strip
M400869 105
Jumper Wire
44014501 127
Jumper Wire Assembly
M412287 105
Junction Box Harness
44136701P 121, 127

K

Key
H8752006H 91
M400008 ..... 77, 87, 89
M400993 ..... 91, 97
M401327 ..... 87, 93
M405232 77
44132301 97
70155601 ..... 17, 59
70155602 59
Key and Instruction Kit
M400994P 97
Kickplate
70117607 67
70117608 67

L

Label
44190901 63
70414001 63
70537001 63
70537101 63
Latch Mounting Bracket
44003201 71
Light
801431 19
801432 17
Limit Thermostat
M409433 101
M410542 ..... 69, 105
M411813 69
Lint Panel
44000002P 67
44293602 67
44293603LG 67
44293603W 67
44293604DG 67
44293604LG 67
44293604W 67
44293605 67
Lint Panel Switch Bracket
44118601 65
Lint Screen
44063601 69

N/A items do not appear in index.

© Copyright, Alliance Laundry Systems LLC – DO NOT COPY or TRANSMIT

Lint Screen Deflector
44162201 69
Loading Spring
M400401 91
Lock, Key and Nut Kit
70722301 59
70733701 ..... 17, 59
Low Pressure Steam Cover
M400828 109
L.P. Conversion Kit
M4544P3 101
M4979P3 101
L.P. Gas Valve Kit
M4897P3 101

M

Main Harness
44137401P 15
44187002 15
Male Tab Terminal
00177 ..... 19, 21, 23, 117
Manifold
44073601 17
Manual Reset Thermostat
M411938 101
M411941 69
Membrane Switch
D510036P 29, 33
M414368P 27
44037901P 23
44039402P 23
Micro V Belt
M411425P 85, 87, 89
Micro V Pulley
M411466P 85, 89, 93
Micro V Sheave
M412156 ..... 85, 87, 89
Mixing Valve
36958P 17
Mixing Valve Shield Bracket
44065701 17
Moisture Sensing Harness Kit
44344702 95
Moisture Sensor Harness Assembly
70448902 95
Moisture Sensor Test Wires
70468901 95
Motor
M412519 81
44045701P 99
44045801P 99
44046101P 99
44048701P 99
Motor Bracket
44117201 ..... 83, 85, 87, 89, 97
Motor Contactor Harness
44136401 ..... 121, 127
44137001P 121, 127
44139901P 121, 127
44142601P 121, 127
Motor Hardware Kit
M4426P3 97
Motor Kit
M412520P 81
Motor Mount Assembly
M413617 81
Motor Switch
M414563 81
Mounting Plate
70208801 ..... 33, 35, 43, 51
Mounting Switch Base
M412186 131
M412187P 123, 125

N

Nameplate
B12389801 61
F8443102 61
F8443106 61
39564 ..... 29, 41
44010401 61
44010601 61
44046801 61
44062901 61
44129904 61
70243901 61
70509601 61
70522001 61
Nameplate Bezel
70117401 61
Nameplate Overlay
44104501 61
44130301 61
44144401 73
70380701 61
70410201 61
70411401 ..... 61, 73
Network Board
210157P 47
Network Board Assembly
201341 ..... 45, 47
210016P 47
Network Board Bracket
44143601 47
Network Board Cover
44143701 47
Network Cable
210165 47
Network Capacitor Assembly
M413863 ..... 121, 127
Network Capacitor Harness Assembly
44143401P 121
44152001 127
Network Controller Kit
NK220 ..... 41, 43, 53
Network Harness
44141801P 45
Network Retrofit Kit
NK208 ..... 41, 43, 53
Network Wire Harness Assembly
44088501P 45
Nut
F430232 117
H88412101 ..... 83, 85, 87, 89, 93
M400022 97

N/A items do not appear in index.

© Copyright, Alliance Laundry Systems LLC – DO NOT COPY or TRANSMIT

M400026 ..... 79, 83, 85, 87, 89
M400033 ..... 85, 87, 89, 95
M400977 ..... 59, 61
M404993 77
M412986 81
M414215 73
02428 ..... 81, 83, 85, 89, 97
20274 ..... 83, 85, 89, 97, 115
21899 71
23951 ..... 67, 73
24205 ..... 19, 21
29786 ..... 19, 25, 29, 41
29787 ..... 23, 25
36020 109
44071201 73
44087201 ..... 85, 87, 89, 93
51236 67
56156 ..... 89, 93
70030401 71
70054 ..... 19, 21, 23, 27, 33, 35, 49, 53, 55, 105
70142 81

O

Opto Coupler
200674P 37

Output Bracket
44223101 55
70440601 53

Output Harness
44186101 ..... 53, 55

Overlay
259/00005/00 25
44130001 27
44130002 27
70115801 27
70128401 27
70128601 27
70128701 27
70129501 29
70129601 29
70130301 27
70130401 27
70130501 27
70130601 27
70130701 27
70135301 27
70257701 29
70257702 29
70257703 ..... 33, 35
70258001 29
70258002 29
70258003 ..... 33, 35
70259001 ..... 29, 33
70261001 29
70261002 29
70261003 ..... 33, 35
70261201 29
70261202 29
70266701 33
70266801 33
70275401 29
70286701 29
70321001 29
70362201 21
70362202 21
70362401 21
70362402 21
70362501 21
70362502 21
70362901 19
70363001 19
70410003 43
70432201 53
70445001 55
70445002 55
70445003 55
70445004 55
70453001 29
70453002 29
70453101 ..... 33, 35
70462401 55
70462402 55
70462701 55
70462901 55
70462902 55
70472201 55
70472202 55
70472401 55
70472402 55
70491901 29
70491902 29
70491903 ..... 33, 35
70493701 55
70493702 55
70494001 21
70494002 21
70499001 53
70504501 49
70504503 51
70504601 49
70504602 49
70504603 51
70504701 21
70504702 21
70504901 55
70504902 55
70505201 29
70505202 29
70505203 ..... 33, 35
70508601 55
70508602 55
70508701 29
70509701 ..... 33, 35
70510501 29
70510601 29
70510701 29
70510801 29
70510901 29
70511001 ..... 33, 35
70526001 55
70526002 55
70537401 29
70537402 29
70537403 ..... 33, 35

P

Panel Locator
56079 ..... 59, 67

PC Board Standoff
210098 47

Pipe Bracket
44175801 117

N/A items do not appear in index.

© Copyright, Alliance Laundry Systems LLC – DO NOT COPY or TRANSMIT

Pipe Nipple
431486 101
70210201 101
70263801 101
Pipe Tee
44231901 101
Plug
M400985 117
Pop Rivet
M400003 ..... 59, 71
70058501 ..... 71, 75, 117
70058502 117
70126301 ..... 67, 73
70126401 67
Porcelain Touch-Up Paint
122P4P 71
370P4P 71
Power Distribution Block
M413865 ..... 129, 131
Power Distribution Block Cover
44014901P 129, 131
Power Harness
44136201P 121
44136301P 121
44139801P 121, 127
44150901 127
44151001 127
44250001 121
44266501 121
Pressure Fitting
44231601 101
Proximity Bracket
44044501 111
Pulley
M412884 83
M414564 97
M414565 81
M414566 97
M414567 81
44233601 81
44338601 85
Pushbutton Switch
M413431 123
70413301 ..... 29, 33, 35, 41, 43, 49, 51, 59
Push-to-Start Switch
801434W 17

R

RC Filter Kit
M4457P3 27
Rear Access Plate
44136101 101
Rear Panel Assembly
44170401P 71, 107, 115
Relay
M412534 ..... 25, 27
Relay/Buzzer Bracket
44041701 23
Resilient Ring Kit
M4525P3P 97
Reversing Contactor Harness
44139601P 121, 127
Reversing Contactor Jumper
44139501 ..... 121, 127
Reversing Contactor Jumper Assembly
44136801 ..... 121, 127
44136901 ..... 121, 127
Reversing Contactor Jumper Harness
44255001 121
Reversing Contactor Jumper Wire
44157401 ..... 121, 127
Reversing Kit
44341501 85
Rib Rod
M401411 77
Rib Wire
44208601 95
Ring
M400399 ..... 87, 93
Rocker Switch
44099601 21
70455101 ..... 19, 21
70461301 21
Roller Bracket Assembly
70404001 67
Roller Catch Arm
70030301 67
Roller Catch Spacer
70030201 67
Roller Catch Wheel
70297601 67
Rotation Sensor
F8066201 111
Rotation Sensor Harness
F8066401 111
70476101 111
Rotation Sensor Kit
7009P 111

S

Screw
D501524 ..... 19, 21, 29, 33, 35, 41, 43, 49, 51, 53, 55
D503661 45
F430116 ..... 83, 87, 93
F430533 ..... 85, 87
F430909 117
F8206901 117
M400056 ..... 81, 89, 93
M400057 ..... 81, 83, 85, 89, 97
M400061 ..... 83, 85, 87, 89
M400063 79
M400065 93
M400077 ..... 85, 89, 93, 97
M400661 73
M402797 101
M405188 ..... 109, 113
M410059 97
M411072 ..... 59, 113, 123, 125, 129, 131
M412627 ..... 83, 85, 87, 89, 93
M413565 81
23008 109
33562 105
38272 123
430497 ..... 17, 45, 65, 69, 71, 97, 101, 105, 107, 123, 125, 129, 131
430648 ..... 89, 93

N/A items do not appear in index.

© Copyright, Alliance Laundry Systems LLC – DO NOT COPY or TRANSMIT

430757 ..... 67, 107
431287 71
44338901 95
44349101 75
51780 ..... 17, 71
51783 ..... 123, 125, 129
61199 73
70033502 ..... 59, 75
70069901 ..... 19, 21, 27, 53
70072801 67
70126103 ..... 85, 89
70132301 67
70182601 59
70187201 ..... 79, 91
70240301 ..... 101, 105
70247701 71
70275801 59
70409801 75
70442101 75

Sensor Harness Assembly
44141701P 17

Shadow Box Clip
M400972 59

Shaft Wire
44208702 95

Sheave
44338701 85

Sheave Kit
44086901P 85, 87, 89, 93

Side Panel
44056701* 71

Side Panel and Bracket Assembly
44056701DG 71
44056701LG 71
44056801DG 71
44056801LG 71
44056801* 71

Single V Sheave
M412931 83

Sleeve
44050601 25

Slip Ring Assembly
44222702 95

Slip Ring Holder
44224401 95

Slot Card Plate Assembly
44089501 ..... 35, 43, 51

Snap Bushing
M400770 ..... 45, 65
M405340 117
M411826 65
44071501 117
70178701 ..... 17, 117

Solenoid Valve DIN Connector
70370301P 109

Spacer
M401402 77
44024001 ..... 83, 85, 89

Spark Electrode
44328701P 101

Spray Paint
298P4P 71

Spud Holder Weldment
44263101 101

Standoff
211/00119/00 25

Steam Coil
M400637P 109

Steam Configuration Harness
44142801 121

Steam Heater Assembly
44020401P 109

Steam Pressure Label
902303 109

Steam Solenoid
70351011P 109
70351012 109

Steam Stand Box
44007501 109

Steam Stove Limit Bypass Harness
70389901 121

Steam Valve
F8322902 109
F8322903 109

Steam Valve Rebuild Kit
70351021P 109

Switch
70411901 107

Switch Assembly
70413401 65

Switch Bracket
70356301 ..... 105, 107

Switch Hole Plug
44057801B 59
44057801LG 59
44057801Q 59
44057801W 59

Switch Plate
M413236 21

T

Temperature Control Bracket
44018601 27

Temperature Knob
44104601 ..... 19, 21

Temperature Selector Bracket
70350201 19

Temperature Selector Switch
D511711 ..... 19, 21

Temperature Selector Switch Bracket
70391701 21

Temperature Sensor Assembly
B12308601 69

Tension Plate Assembly
M414405 ..... 83, 85, 87, 89, 93

Terminal Block
430642 ..... 123, 125, 129

Thermistor
M414704 69
44064701 ..... 17, 71

Thermistor Plate
44068101 71
44068102 71

Thimble Vane Assembly
M400503 113

N/A items do not appear in index.

© Copyright, Alliance Laundry Systems LLC – DO NOT COPY or TRANSMIT

Time Delay Interlock Kit
44314401 131
Top Cover
M414759 109
44139301 71
Top Cover Pan
44135001P 71
Top Panel Bracket
44368201 71
Top Rear Panel
44170501 71
44176201 71
Transformer
M414228P 123, 125, 129, 131
M414229P 123, 125, 129, 131
M414230P 123, 125
M414312P 123, 125
44074401 ..... 123, 125, 129, 131
Trunnion and Bearing Assembly
M4640P3 79
M4641P3 79
44336301 79
Trunnion Assembly
M413834P 77
44207901P 77
44208001P 77
44261801 77
Trunnion Housing
M413826P 79
Trunnion Housing Assembly
44375001P 79
Tumbler Dolly Kit
M4379P4 59

U

USB Gateway Kit
NK330 ..... 41, 43, 53
USB IR Interface Kit
203346 ..... 41, 43, 49, 51, 53, 55

V

Valve Coil
F8514801 109
Valve Kit
F8521701 109
Valve Rebuild Kit
F8379502 109
Valve Replacement Kit
M4908P3 101
M4909P3 101

W

Warning Label
70534301 63
Washer
M400013 ..... 81, 83, 85, 89, 97
M400014 ..... 83, 85, 87, 89, 97, 115
M400015 ..... 77, 79
M400080 ..... 81, 83, 85, 87, 89, 93, 97, 115
M400991 97
M403958 ..... 83, 87, 93
M412188 ..... 83, 85, 87, 89, 93
02834 81
20103 79
44238902 95
70261401 79
70265901 ..... 89, 93
70270301 ..... 89, 93
70409301 73
Wire Guard
201595P 37
Wire Label
70218701 117
70218801 117
70219001 117
Wireless Network Kit
NK301 ..... 41, 43, 49, 51, 53
Wireless Transceiver Assembly
202335 45

N/A items do not appear in index.

© Copyright, Alliance Laundry Systems LLC – DO NOT COPY or TRANSMIT

Notes

© Copyright, Alliance Laundry Systems LLC – DO NOT COPY or TRANSMIT