Drying Tumblers

30 Pound Capacity

15 Digit Model Numbers with 2 in 12th Position

Refer to Page 5 for Model Numbers

Parts

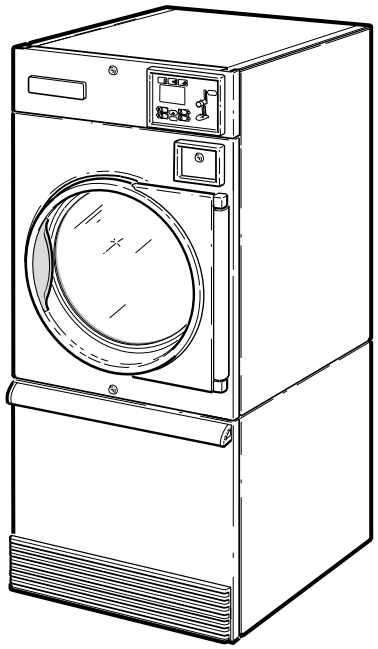

T478C_70501001

Alliance™ Laundry Systems

www.alliancelaundry.com

Part No. 70501001R16
September 2025

Table of Contents

Title	Page
Parts Ordering Information	3
Serial Plate Location	3
Model Identification	5
Product Overview - Heat Source and Voltage	6
Product Overview - Control Suffixes (Drawing 1 of 3)	8
Product Overview - Control Suffixes (Drawing 2 of 3)	10
Product Overview - Control Suffixes (Drawing 3 of 3)	12
Single Drop Control Components	14
Dual Digital Timer Control Components	16
DX4 Control Components	18
DMP Control	20
OPL Microprocessor Controls	22
Coin Drop Components for MDC Models	24
Coin Drop Components for MDC Models - Wire Harnesses	26
BY and BZ Control Option for MDC Models	28
Coin Drops	30
Coin Drop Kits	32
Coin Drop Components for NetMaster Models	34
Card Reader Components for NetMaster Models	36
Network Board for NetMaster Models	38
Coin Drop Components for Quantum Control	40
Card Reader Components for Quantum Control	42
Network Board	44
Communication Board	46
Coin Drop Components for Galaxy 600 Control	48
Card Reader Components for Galaxy 600 Control	50
UniLinc Control	52
LED OPL Control	54
Door Assemblies	56
Door Components	58
Hinge Components	60
Control Panel	62
Front Panel Assemblies	64
False Fronts	66
Cabinet Front Components	68
Emergency Stop Button for CE Models	70
Lower Cabinet Components	72
Cylinder and Trunnion Assembly	74
Cylinder Components	76
Cabinet Components	78
Fire Suppression System Components	80

© Copyright 2025, Alliance Laundry Systems LLC

All rights reserved. No part of the contents of this book may be reproduced or transmitted in any form or by any means without the expressed written consent of the publisher.

Fire Suppression System Control Box 82
Drive Motor Components for Nonreversing Models 84
Drive Motor Components for Reversing Models 86
Blower Components 88
Moisture Sensing Components 90
Rotation Sensor 92
Airflow Switch 94
Gas Burner Housing and Secondary Stove Limit 96
Gas Valve Assembly - Non-CE and Non-Australian Gas Models 98
Burner Orifices - Non-CE and Non-Australian Gas Models 100
Gas Valve and Piping - CE and Australian Gas Models 102
Electric Heater Components 104
Steam Heater Components 106
Control Tray Harnesses for Gas Models 108
Control Tray for Non-CE and Non-Australian Gas Models 110
Control Tray Components for CE and Australian Gas Models - (Drawing 1 of 2) 112
Control Tray Components for CE and Australian Gas Models - (Drawing 2 of 2) 114
Control Tray Harnesses for Steam Models 116
Control Tray for Non-CE Steam Models 118
Control Tray for CE Steam Models 120
Control Tray Harnesses for Electric Models 122
Control Tray for Electric Models 124
Accessory Box Harnesses for Electric Models 126
Accessory Box for Non-CE Electric Models 128
Accessory Box for CE Electric Models 130
Parts Index 133

© Copyright, Alliance Laundry Systems LLC – DO NOT COPY or TRANSMIT

Parts Ordering Information

If literature or replacement parts are required, contact the source from whom the machine was purchased or contact Alliance Laundry Systems at (920) 748-3950 for the name and address of the nearest authorized parts distributor.

For technical assistance, call the number listed below:

(920) 748-3121 Ripon, Wisconsin

Serial Plate Location

When calling or writing about your product, be sure to mention model and serial numbers. Model and serial numbers are located on serial plate(s) as shown.

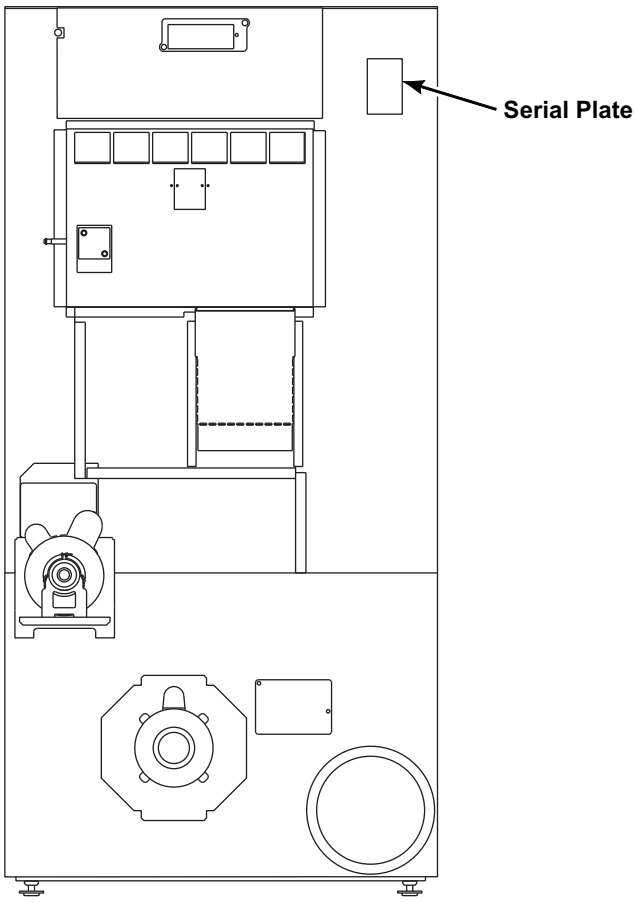

TMB2098N_70501001

© Copyright, Alliance Laundry Systems LLC – DO NOT COPY or TRANSMIT

Notes

© Copyright, Alliance Laundry Systems LLC – DO NOT COPY or TRANSMIT

Model Identification

Information in this manual is applicable to these tumbler models:

BA030L
BA030N
BH030E
BH030F
BH030L
BH030N
BH030R
BH030S
BK030N
BK030R
BT030D
BT030E
BT030F
BT030L
BT030N
BT030R
BT030S
BU030E
BU030F
BU030L
BU030N
BU030R
BU030S
CA030L
CA030N
CK030N
CK030R
CT030E
CT030F
CT030L
CT030N
CT030R
CT030S
CU030E
CU030F
CU030L
CU030N
CU030R
CU030S

GA030L
GA030N
GH030E
GH030L
GH030N
GH030S
GK030N
GT030E
GT030L
GT030N
GT030S
GU030E
GU030L
GU030N
GU030S
HA030L
HA030N
HH030E
HH030F
HH030L
HH030N
HH030R
HH030S
HK030N
HK030R
HT030D
HT030E
HT030F
HT030L
HT030N
HT030R
HT030S
HU030E
HU030F
HU030L
HU030N
HU030R
HU030S
IT030E
IT030F
IT030L
IT030N
IT030R
IT030S

KA030L
KA030N
KK030N
KT030E
KT030L
KT030N
KT030S
KU030E
KU030L
KU030N
KU030S
LA030L
LA030N
LK030N
LT030E
LT030L
LT030N
LT030S
LU030E
LU030L
LU030N
LU030S
MT030E
MT030F
MT030L
MT030N
MT030R
MT030S
NH030E
NH030L
NH030N
NH030S
NT030E
NT030L
NT030N
NT030S
NU030E
NU030L
NU030N
NU030S

PA030L
PA030N
PH030E
PH030L
PH030N
PH030S
PK030N
PT030E
PT030L
PT030N
PT030S
PU030E
PU030L
PU030N
PU030S
SA030L
SA030N
SH030E
SH030F
SH030L
SH030N
SH030R
SH030S
SK030N
SK030R
ST030D
ST030E
ST030F
ST030L
ST030N
ST030R
ST030S
SU030E
SU030F
SU030L
SU030N
SU030R
SU030S

UA030L
UA030N
UH030E
UH030F
UH030L
UH030N
UH030R
UH030S
UK030N
UK030R
UT030E
UT030F
UT030L
UT030N
UT030R
UT030S
UU030E
UU030F
UU030L
UU030N
UU030R
UU030S
YT030E
YT030L
YT030N
YT030S
YU030E
YU030L
YU030N
YU030S

© Copyright, Alliance Laundry Systems LLC – DO NOT COPY or TRANSMIT

Product Overview - Heat Source and Voltage

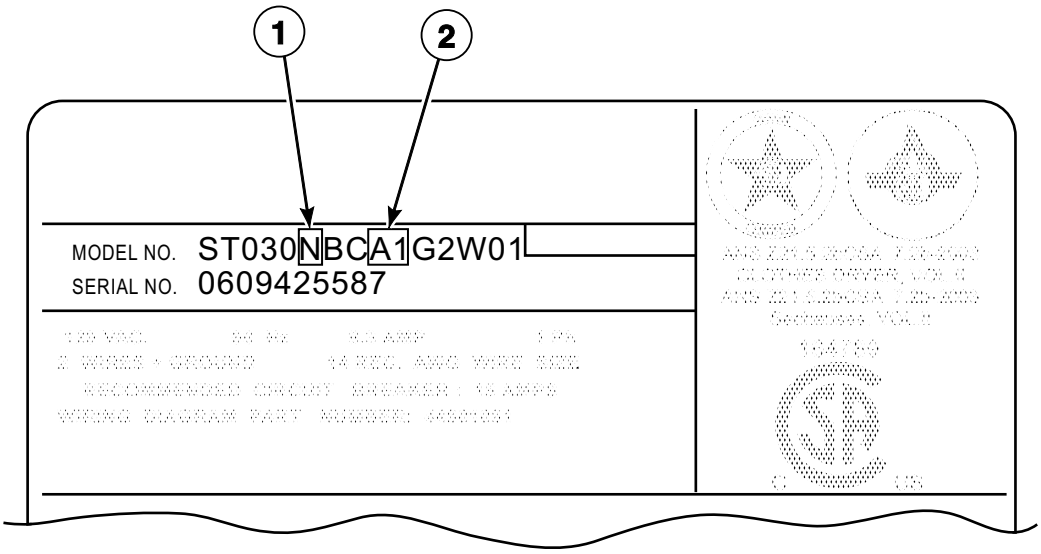

TMB2787P_70501001

© Copyright, Alliance Laundry Systems LLC – DO NOT COPY or TRANSMIT

Product Overview - Heat Source and Voltage

REF	PART NO.	DESCRIPTION	COMMENTS
1	-	Heat Source	D: Liquid Petroleum Gas (L.P) E: Electric F: Reduced Electric (Eco Line) L: Liquid Petroleum Gas (L.P.) N: Natural Gas (N.G.) R: Reduced Gas, Natural Gas (Eco Line) S: Steam
2	-	Voltage	A1: 100, 200 Volt/50 Hertz/1 Phase A2: 100, 200-220 Volt/60Hertz/1 Phase B2: 120, 208-240 Volt/60 Hertz/1 Phase; For high Amp motors B3: 120, 208-240 Volt/60 Hertz/1 Phase; For low Amp motors F1: 200 Volt/50 Hertz/1 Phase F2: 200 Volt/60 Hertz/1 Phase F4: 200 Volt/50 Hertz/3 Phase F5: 200-208 Volt/60 Hertz/3 Phase F6: 200-208, 240 Volt/60 Hertz/3 Phase G1: 208 Volt/60 Hertz/1 Phase G2: 208-240 Volt/60 Hertz/1 Phase J1: 230 Volt/50 Hertz/1 Phase J2: 230-240 Volt/50 Hertz/1 Phase J4: 240 Volt/60 Hertz/1 Phase J5: 230 Volt/50 Hertz/3 Phase J6: 230-240 Volt/50 Hertz/3 Phase J8: 240 Volt/60 Hertz/3 Phase M1: 380 Volt/50 Hertz/3 Phase M2: 380, 400-415 Volt/50 Hertz/3 Phase M3: 380 Volt/60 Hertz/3 Phase N1: 400-415 Volt/50 Hertz/3 Phase N2: 400 Volt/50 Hertz/3 Phase; 25 pound models only P1: 440 Volt/60 Hertz/3 Phase Q1: 460-480 Volt/60 Hertz/3 Phase

© Copyright, Alliance Laundry Systems LLC – DO NOT COPY or TRANSMIT

Product Overview - Control Suffixes (Drawing 1 of 3)

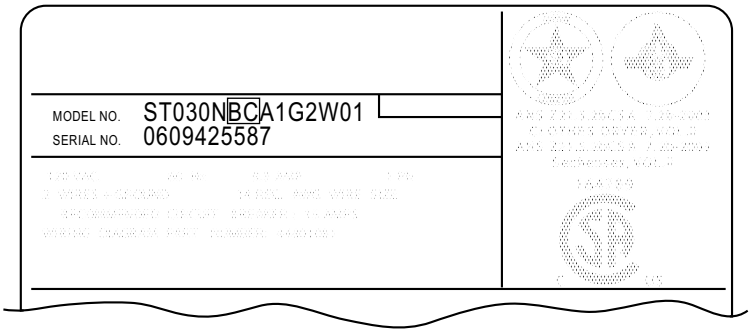

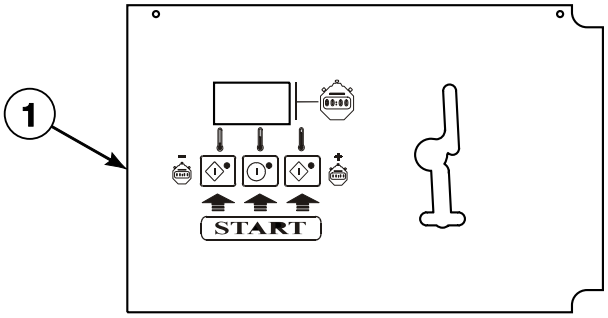

3B, 3K, 3L, 3O, 3V, 3W, 3X and R3
Control Suffixes

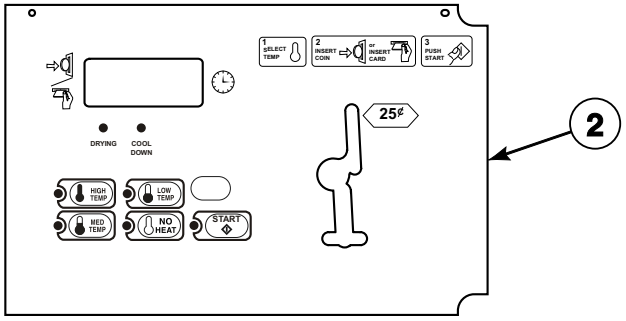

BB, BC, BW and BX
Control Suffixes

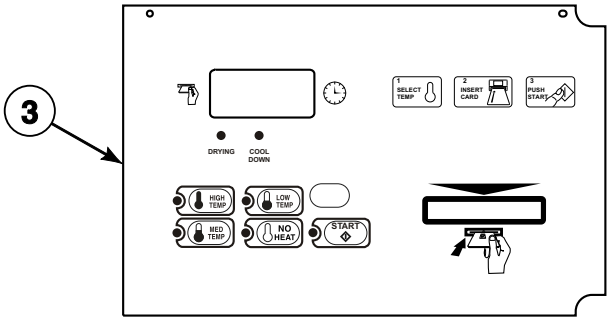

BK, BL, BY and BZ
Control Suffixes

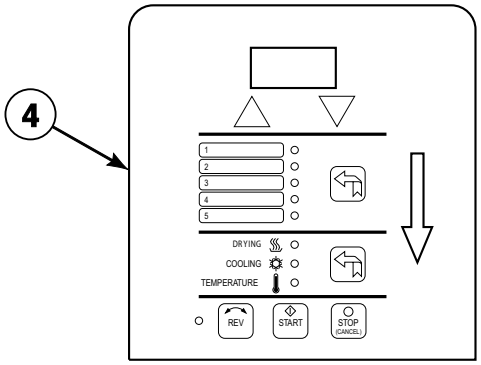

DO
Control Suffix

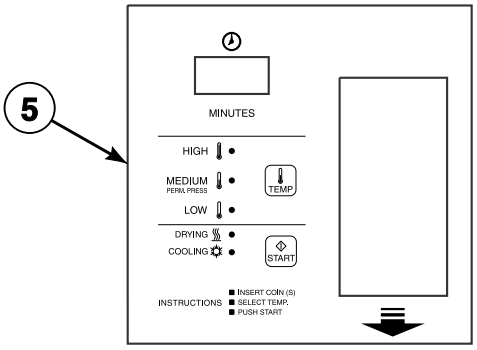

DV and DX
Control Suffixes

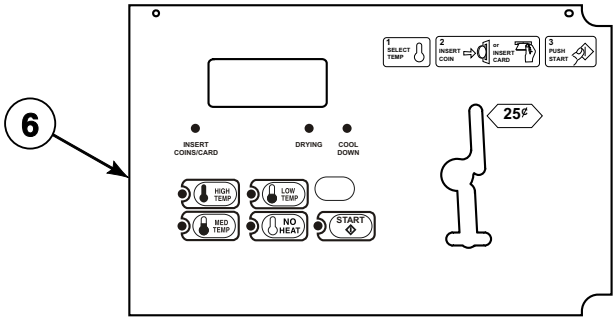

NC, NX, ZC and ZX
Control Suffixes

TMB3269P_70501001

© Copyright, Alliance Laundry Systems LLC – DO NOT COPY or TRANSMIT

Product Overview - Control Suffixes (Drawing 1 of 3)

REF	PART NO.	DESCRIPTION	COMMENTS
1	-	Control - Nonreversing	3L: DX4 prep for central pay 3O: DX4 OPL 3V: DX4 vended 3X: DX4 prep for coin
	-	Control - Reversing	3B: reversing DX4 vended 3K: reversing DX4 prep for central pay 3W: reversing DX4 prep for coin R3: reversing DX4 OPL
2	-	Control - Nonreversing	BC: basic electronic, coin BX: basic electronic, prep for coin
	-	Control - Reversing	BB: reversing basic electronic, coin BK: reversing basic electronic, prep for central pay BW: reversing basic electronic, prep for coin
3	-	Control - Nonreversing	BL: basic electronic, prep for central pay BY: basic electronic, prep for card
	-	Control - Reversing	BZ: reversing basic electronic, prep for card
4	-	Control - Nonreversing	DO: DMP OPL
5	-	Control - Nonreversing	DV: DMP vended DX: DMP prep for coin
6	-	Control - Nonreversing	NC: NetMaster coin NX: NetMaster, prep for coin ZC: NetMaster network coin ZX: NetMaster network, prep for coin

NOTE: Coin models have the following control suffixes: 3B, 3K, 3L, 3V, 3W, 3X, BB, BC, BK, BL, BW, BX, BZ, DV, DX, NC, NX, ZC and ZX

NOTE: OPL models have the following control suffixes: 3O, BY, DO and R3

© Copyright, Alliance Laundry Systems LLC – DO NOT COPY or TRANSMIT

Product Overview - Control Suffixes (Drawing 2 of 3)

All Models Except P Models

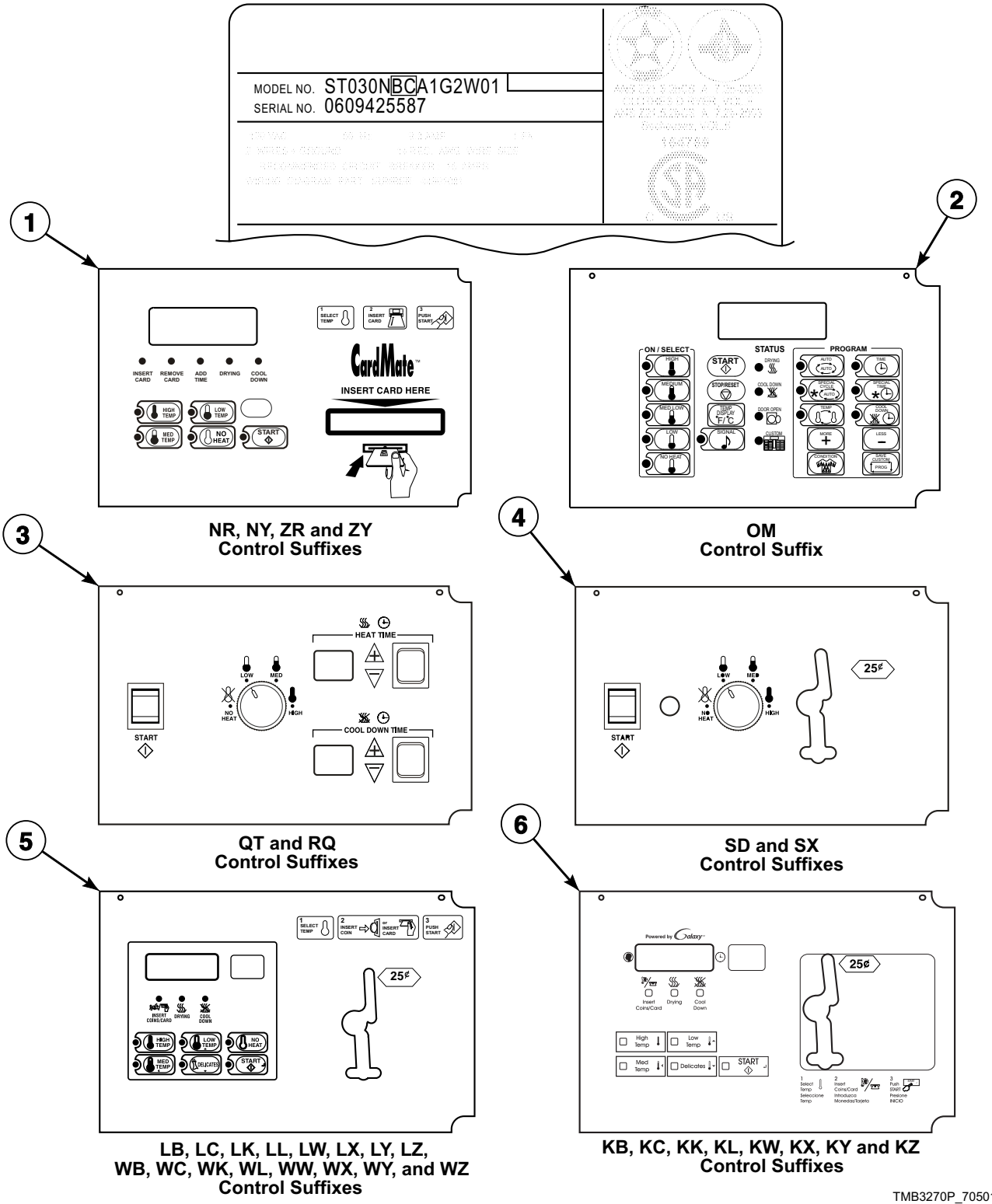

NR, NY, ZR and ZY Control Suffixes

OM Control Suffix

QT and RQ Control Suffixes

SD and SX Control Suffixes

LB, LC, LK, LL, LW, LX, LY, LZ, WB, WC, WK, WL, WW, WX, WY, and WZ Control Suffixes

KB, KC, KK, KL, KW, KX, KY and KZ Control Suffixes

TMB3270P_70501001

© Copyright, Alliance Laundry Systems LLC – DO NOT COPY or TRANSMIT

Product Overview - Control Suffixes (Drawing 2 of 3)

REF	PART NO.	DESCRIPTION	COMMENTS
1	-	Control - Nonreversing	NR: NetMaster card NY: NetMaster, prep for card ZR: NetMaster network card ZY: NetMaster network, prep for card
2	-	Control - Nonreversing	OM: OPL micro
3	-	Control - Nonreversing	QT: dual digital timer
	-	Control - Reversing	RQ: reversing dual digital timer
4	-	Control - Nonreversing	SD: single drop SX: single drop, prep for coin
5	-	Control - Nonreversing	LC: network adaptable coin LL: network adaptable, prep for central pay LX: network adaptable, prep for coin LY: network adaptable, prep for card WC: network ready coin WL: network ready, prep for central pay WX: network ready, prep for coin WY: network ready, prep for card
	-	Control - Reversing	LB: reversing network adaptable coin LK: reversing network adaptable, prep for central pay LW: reversing network adaptable, prep for coin LZ: reversing network adaptable, prep for card WB: reversing network ready coin WK: reversing network ready, prep for central pay WW: reversing network ready, prep for coin WZ: reversing network ready, prep for card
6	-	Control - Nonreversing	KC: single coin KL: prep for central pay KX: prep for coin KY: prep for card
	-	Control - Reversing	KB: reversing single coin KK: reversing prep for central pay KW: reversing prep for coin KZ: reversing prep for card

NOTE: Coin models have the following control suffixes: KB, KC, KK, KL, KW, KX, KY, KZ, LB, LC, LK, LL, LW, LX, LY, LZ, SD, SX, WB, WC, WK, WL, WW, WX, WY and WZ

NOTE: OPL models have the following control suffixes: NR, NY, OM, QT, RQ, ZR and ZY

© Copyright, Alliance Laundry Systems LLC – DO NOT COPY or TRANSMIT

Product Overview - Control Suffixes (Drawing 3 of 3)

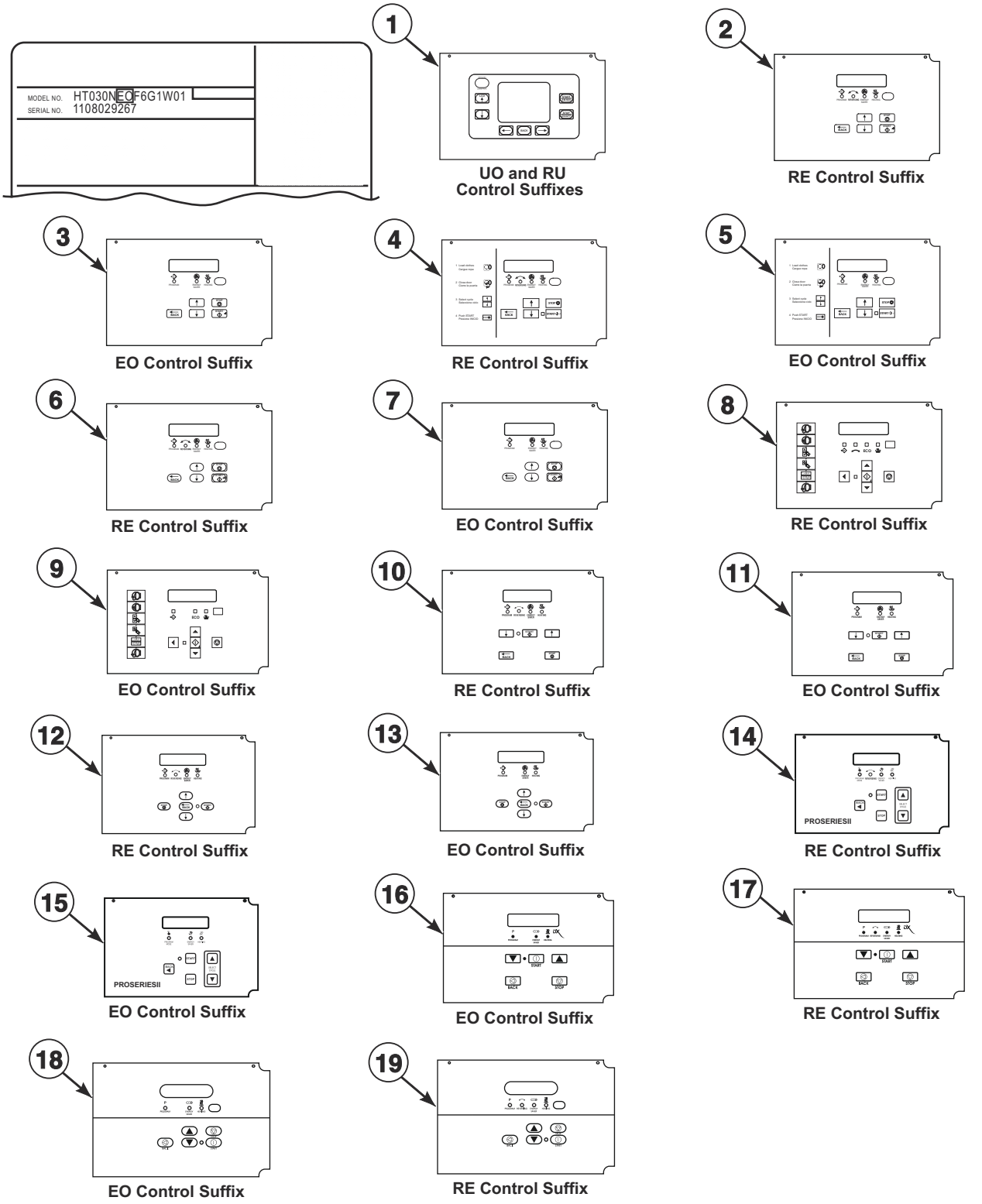

TMB3353P_70501001

© Copyright, Alliance Laundry Systems LLC – DO NOT COPY or TRANSMIT

Product Overview - Control Suffixes (Drawing 3 of 3)

REF	PART NO.	DESCRIPTION	COMMENTS
1	-	Control - Reversing	U models; RU: reversing UniLinc OPL
	-	Control - Nonreversing	U models; UO: UniLinc OPL
2	-	Control - Reversing	S models; RE: reversing LED OPL
3	-	Control - Nonreversing	S models; EO: LED OPL
4	-	Control - Reversing	H models; RE: reversing LED OPL
5	-	Control - Nonreversing	H models; EO: LED OPL
6	-	Control - Reversing	U models; RE: reversing LED OPL
7	-	Control - Nonreversing	U models; EO: LED OPL
8	-	Control - Reversing	B, C and I models; RE: reversing LED OPL
9	-	Control - Nonreversing	B, C and I models; EO: LED OPL
10	-	Control - Reversing	P models; Models through 9/30/14; RE: reversing LED OPL
11	-	Control - Nonreversing	P models; Models through 9/30/14; EO: LED OPL
12	-	Control - Reversing	N and Y models; L models through 5/31/15; RE: reversing LED OPL
13	-	Control - Nonreversing	N and Y models; L models through 5/31/15; EO: LED OPL
14	-	Control - Reversing	G and K models; RE: reversing LED OPL
15	-	Control - Nonreversing	G and K models; EO: LED OPL
16	-	Control - Nonreversing	P models; Models starting 10/1/14 through 5/31/15; EO: LED OPL
17	-	Control - Reversing	P models; Models starting 10/1/14 through 5/31/15; RE: reversing LED OPL
18	-	Control - Nonreversing	L and P models; Models starting 6/1/15; EO: LED OPL
19	-	Control - Reversing	L and P models; Models starting 6/1/15; RE: reversing LED OPL

NOTE: OPL models have the following control suffixes: EO, RE, RU and UO

© Copyright, Alliance Laundry Systems LLC – DO NOT COPY or TRANSMIT

Single Drop Control Components

C, H, I and S Models Through 3/31/10 with SD and SX Control Suffixes

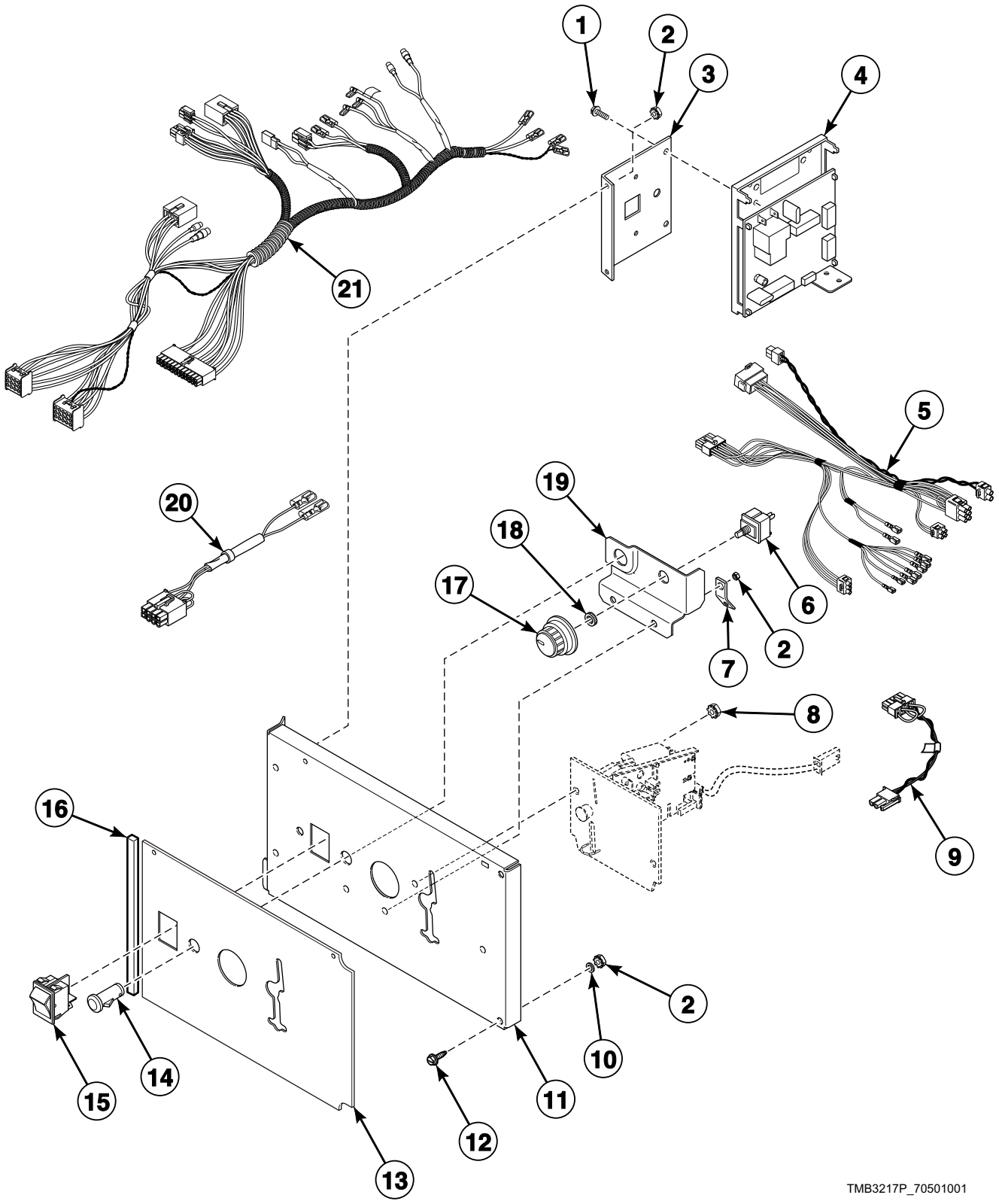

© Copyright, Alliance Laundry Systems LLC – DO NOT COPY or TRANSMIT

Single Drop Control Components

REF	PART NO.	DESCRIPTION	COMMENTS
	70370001	Control Set	C, H and S Australian and CE models; Includes items 1-8, 11, 14, 15, 18 and 19
	70370101P	Control Set	All other models; Includes items 1-8, 11, 14, 15, 18 and 19
1	D501524	Screw	
2	70054	Nut	
3	70357901	Control Chassis Mounting Bracket	
4	D512199P	Control Assembly	Models through Serial No. 0701012067
	D513139P	Control Assembly	Models starting Serial No. 0701012068
5	70398401	Control Panel Harness	Australian and CE models
	70369001	Control Panel Harness	All other models
6	D511711	Temperature Selector Switch	
7	00177	Male Tab Terminal	
8	29786	Nut	
9	70324601	Jumper Calibration Wire	
10	M405535	Washer	
11	70363401	Control Door Assembly	
12	70069901	Screw	
13	70363001	Overlay	H models
	70362901	Overlay	All other models
14	801431	Light	
15	70455101	Rocker Switch	Start
16	70414101	Foam Gasket	6 inches required; Mounts to front of overlay, even with edge
17	44104601	Temperature Knob	
18	24205	Nut	
19	70350201	Temperature Selector Bracket	
20	70364104P	Coin Vault Switch Harness	Non-CE models
21	70467801	Main Harness	Electric models need 55881 Harness Strap

© Copyright, Alliance Laundry Systems LLC – DO NOT COPY or TRANSMIT

Dual Digital Timer Control Components

C, H, I, L, N, P, S, U and Y Models
G and K Models Starting 1/16/12
Models with QT and RQ Control Suffixes

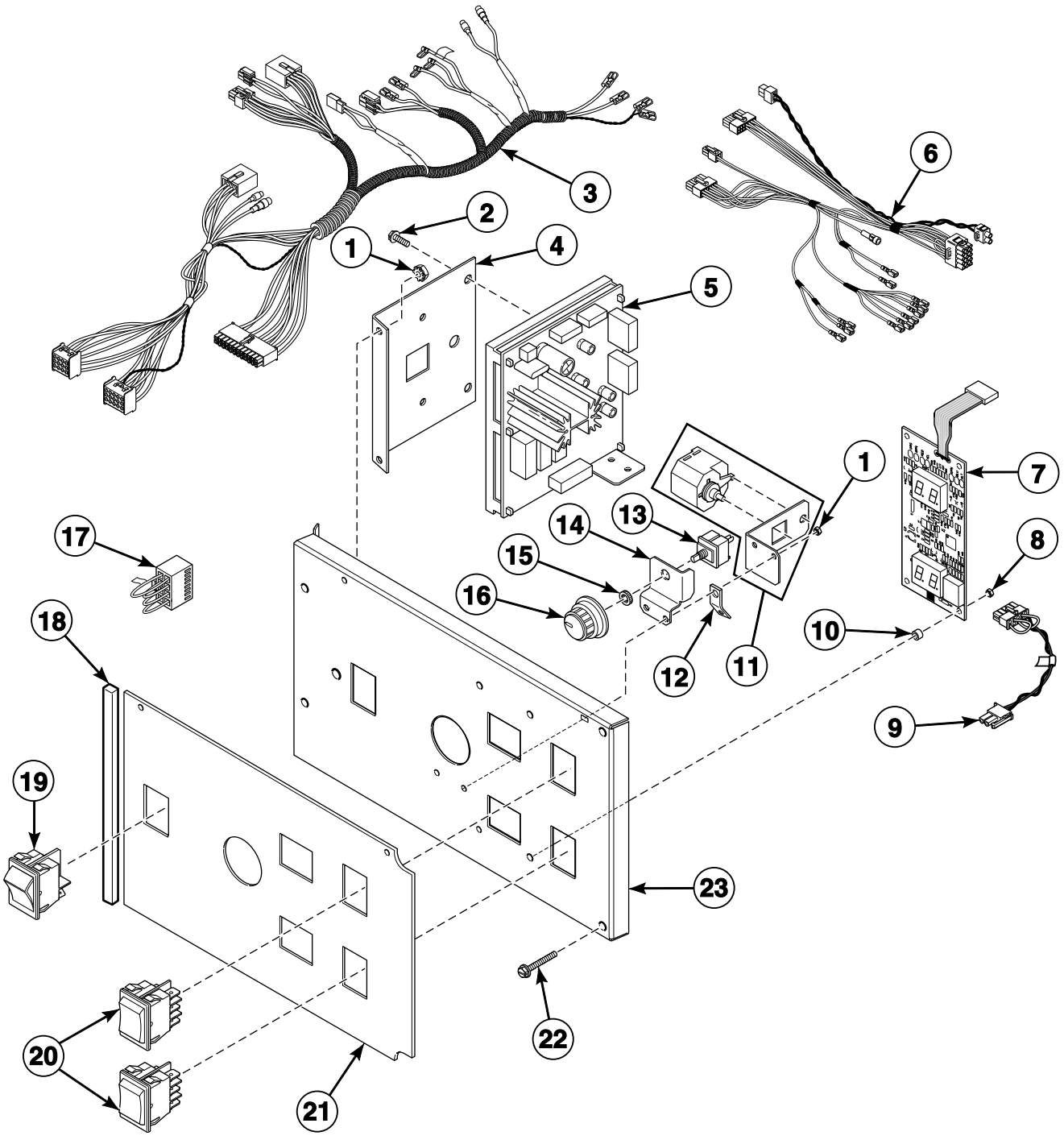

TMB3011P_70501001

© Copyright, Alliance Laundry Systems LLC – DO NOT COPY or TRANSMIT

Dual Digital Timer Control Components

REF	PART NO.	DESCRIPTION	COMMENTS
	70370201P	Control Set	Includes items 1, 2, 4-8, 10, 12-16, 19, 20 and 23
1	70054	Nut	
2	D501524	Screw	
3	70467801	Main Harness	Electric models need 55881 Harness Strap; Models through 7/31/11 and starting again 7/9/12
	70441301	Main Harness	Electric models need 55881 Harness Strap; Models starting 8/1/11 through 7/8/12
4	70357901	Control Chassis Mounting Bracket	
5	D512202P	Control Assembly	
6	70367001P	Control Panel Harness	
7	D512218P	Display Assembly	C and I models through 7/14/14; All other models
	70503101P	Control Assembly	C and I models starting 7/15/14
8	29787	Nut	
9	70324601	Jumper Calibration Wire	
10	56079	Panel Locator	
11	M4860P3	Buzzer Kit	Includes buzzer, bracket and harness
12	00177	Male Tab Terminal	
13	D511711	Temperature Selector Switch	
14	70391701	Temperature Selector Switch Bracket	
15	24205	Nut	
16	44104601	Temperature Knob	
17	70364103	Bypass Harness	Non-CE models
18	70414101	Foam Gasket	6 inches required; Mounts to front of overlay, even with edge
19	70455101	Rocker Switch	Start
20	70461301	Rocker Switch	
21	70362201	Overlay	G, K, L, N, S, and Y models; C and I models through 7/14/14; U models through 8/17/14; P models starting 1/15/15; Nonreversing
	70362202	Overlay	G, K, L, N, S, and Y models; C and I models through 7/14/14; U models through 8/17/14; P models starting 1/15/15; Reversing
	70504701	Overlay	C and I models starting 7/15/14; Nonreversing
	70504702	Overlay	C and I models starting 7/15/14; Reversing
	70494001	Overlay	U models starting 8/18/14; Nonreversing
	70494002	Overlay	U models starting 8/18/14; Reversing
	70362501	Overlay	H models; Nonreversing
	70362502	Overlay	H models; Reversing
	70362401	Overlay	P models; Models through 1/14/15; Nonreversing
	70362402	Overlay	P models; Models through 1/14/15; Reversing
22	70069901	Screw	
23	70360601	Control Plate Assembly	

© Copyright, Alliance Laundry Systems LLC – DO NOT COPY or TRANSMIT

DX4 Control Components

B and I Models with 3B, 3K, 3L, 3O, 3V, 3W, 3X and R3 Control Suffixes

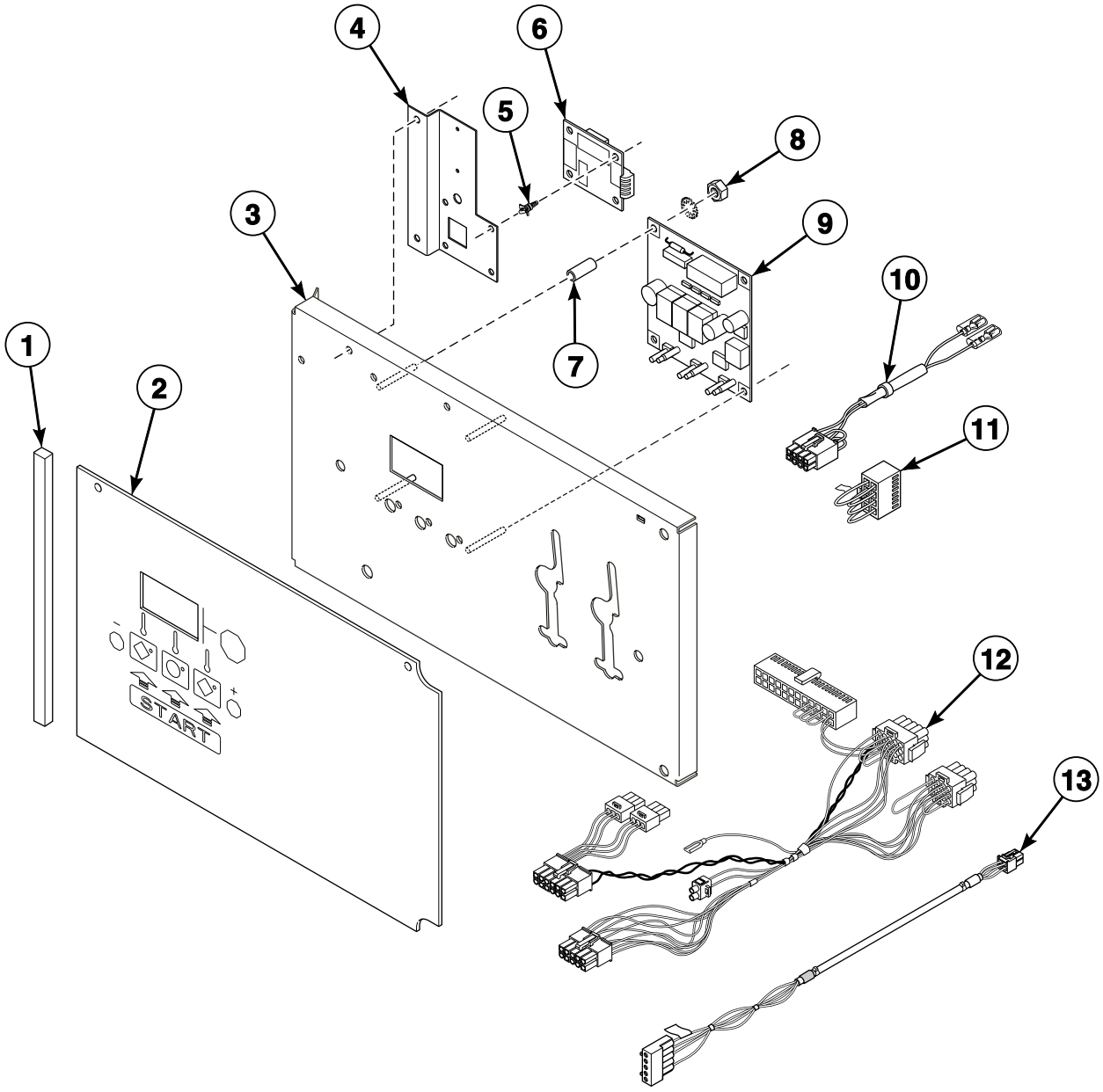

TMB3271P_70501001

© Copyright, Alliance Laundry Systems LLC – DO NOT COPY or TRANSMIT

DX4 Control Components

REF	PART NO.	DESCRIPTION	COMMENTS
1	70414101	Foam Gasket	6 inches required; Mounts to front of overlay, even with edge
2	44240501	Graphic Overlay	OPL
	44050501	Graphic Overlay	Coin; Single drop; Models through 7/31/11
	44239401	Graphic Overlay	Coin; Single drop; Models starting 8/1/11
	44050502	Graphic Overlay	Coin; Dual drop; Models through 7/31/11
	44239402	Graphic Overlay	Coin; Dual drop; Models starting 8/1/11
	44239403	Graphic Overlay	Prep for central pay
3	44050701P	Control Plate Kit	
4	44263501	Bracket	CE models; All other models with 3K and 3L control suffixes
5	211/00119/00	Standoff	4 required
6	209/00471/75	Central Pay Interface Control Assembly	3K and 3L control suffixes
7	44050601	Sleeve	4 required
8	29787	Nut	
9	70462301P	Control Assembly	3O control suffix
	70462302P	Control Assembly	R3 control suffix
	70462361P	Control Assembly	3B, 3V, 3W and 3X control suffixes
	70462369	Control Assembly	3K and 3L control suffixes
10	70364104P	Coin Vault Switch Harness	3V and 3B control suffixes; Non-CE models
11	70364103	Bypass Harness	3O, 3W, 3X and R3 control suffixes; Non-CE models
12	70489901	Control Panel Harness	Australian and CE models
	70485301	Control Panel Harness	All other models
13	70491501	Central Pay Harness	3K and 3L control suffixes

© Copyright, Alliance Laundry Systems LLC – DO NOT COPY or TRANSMIT

DMP Control

C and I Models with DO, DV and DX Control Suffixes
Coin Models Through 4/1/10; OPL Models Through 7/31/11

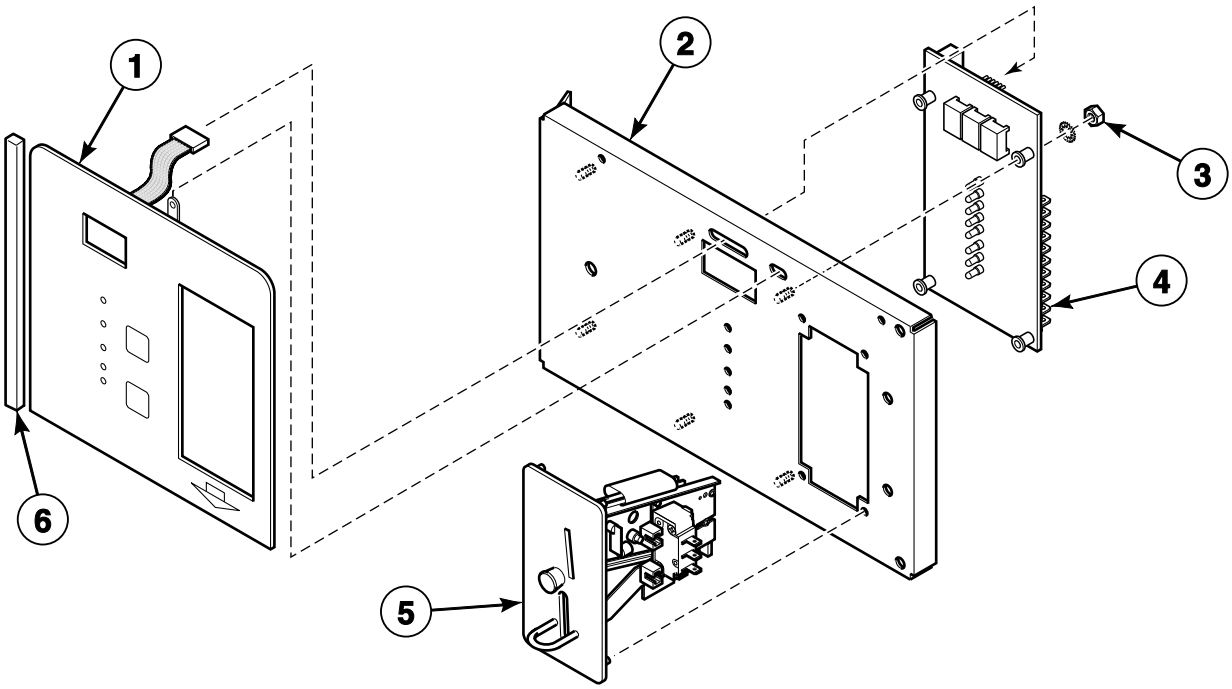

Coin

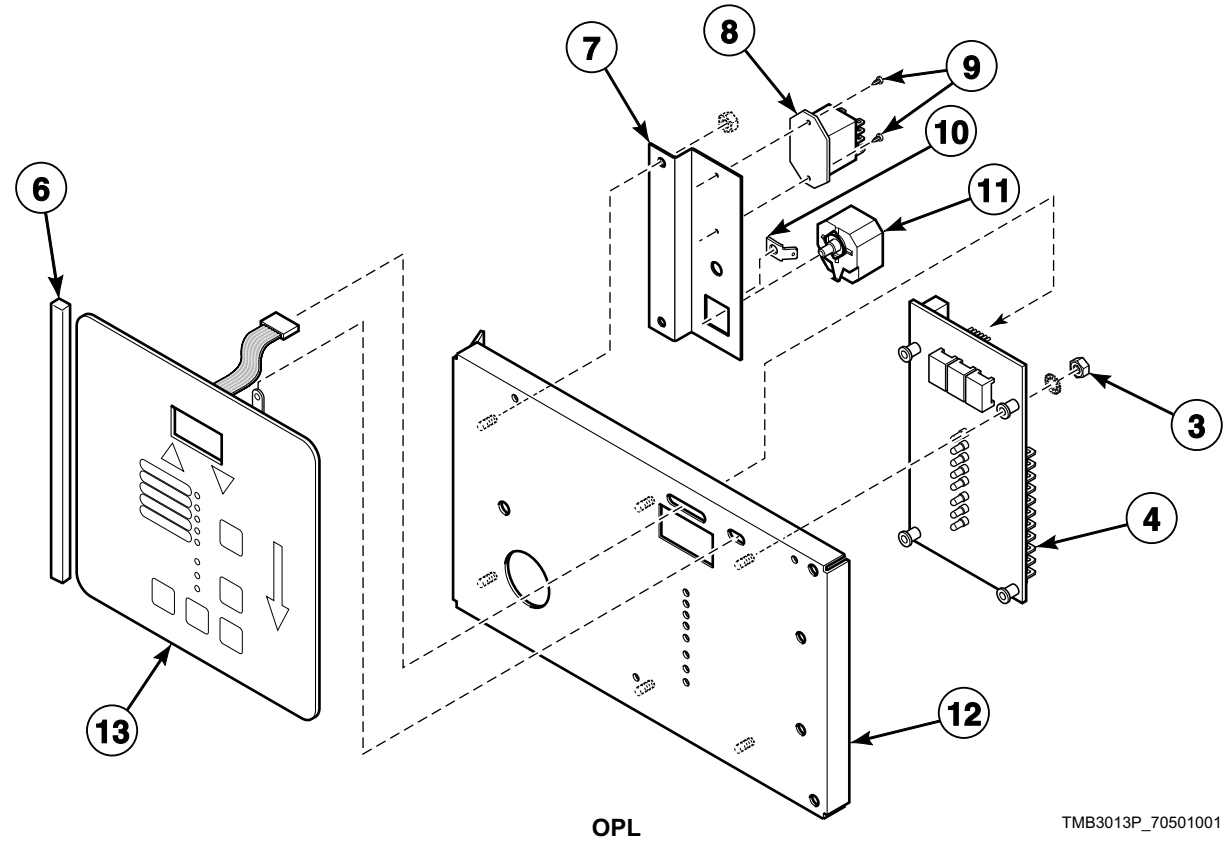

OPL

TMB3013P_70501001

© Copyright, Alliance Laundry Systems LLC – DO NOT COPY or TRANSMIT

DMP Control

REF	PART NO.	DESCRIPTION	COMMENTS
1	44039402P	Membrane Switch	Coin; DV and DX control suffixes
2	44041001	Control Plate Assembly	Coin; Includes studs; DV and DX control suffixes
3	29787	Nut	
4	44037801P	Electronic Control	
5	44039701P	Coin Drop Assembly	United States; $.25
	44039702	Coin Drop Assembly	Mexico; 2 peso
	44039703	Coin Drop Assembly	Token; .880
	44039704	Coin Drop Assembly	Japan; 100 yen
	44039705	Coin Drop Assembly	England; 20 pence
	44039706	Coin Drop Assembly	Token; .800
	44039707	Coin Drop Assembly	England; 50 pence
6	70414101	Foam Gasket	6 inches required; Mounts to front of overlay, even with edge
7	44041701	Relay/Buzzer Bracket	
8	M412534	Relay	
9	M402797	Screw	
10	00177	Male Tab Terminal	
11	D505447	Adjustable Buzzer	
12	44040901	Control Plate Assembly	OPL; Includes studs; DO control suffix
13	44037901P	Membrane Switch	OPL; DO control suffix

© Copyright, Alliance Laundry Systems LLC – DO NOT COPY or TRANSMIT

OPL Microprocessor Controls

H, S and U Models Through 7/31/11
G, L and P Models Through 1/1/12
Models with OM Control Suffix

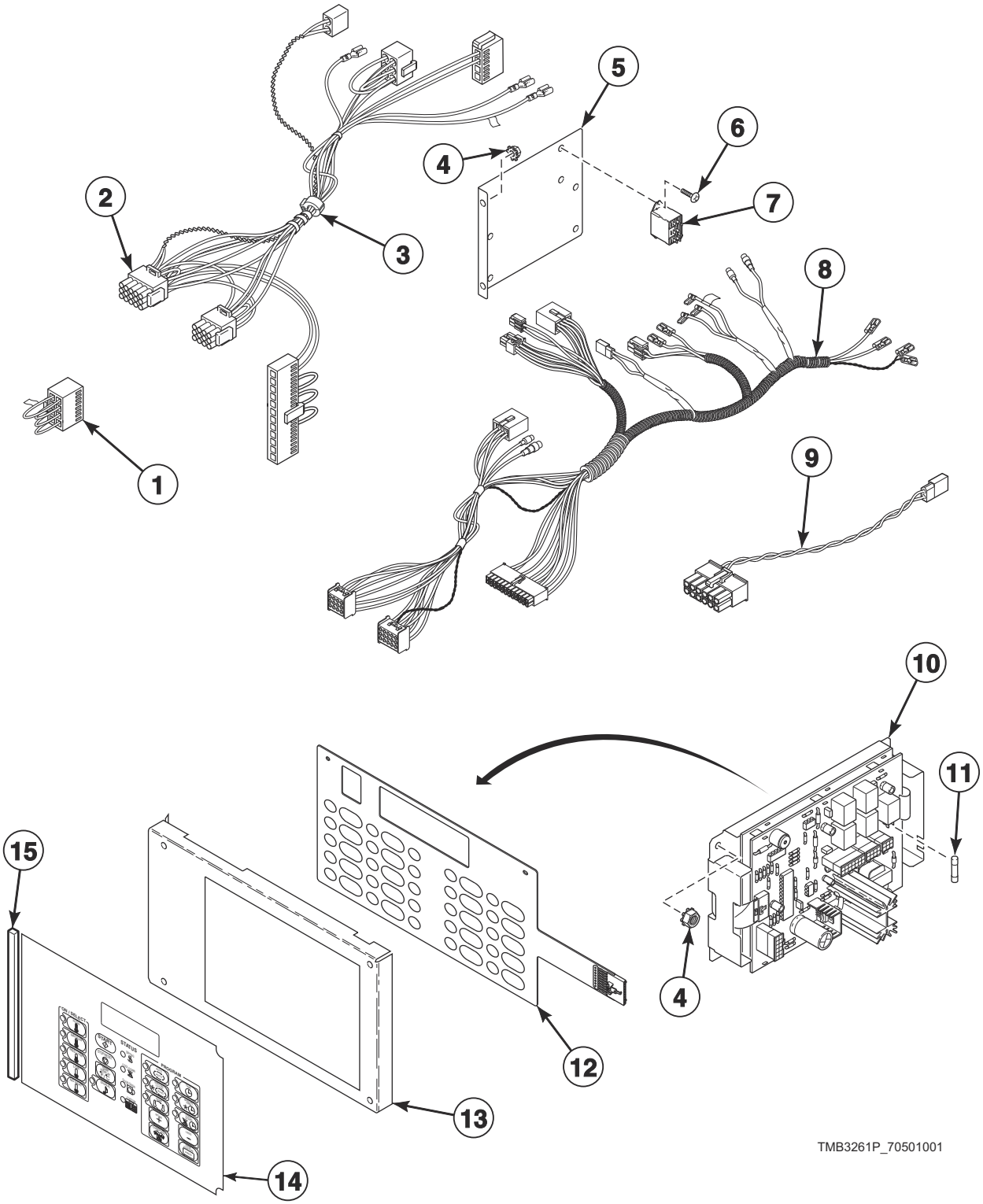

© Copyright, Alliance Laundry Systems LLC – DO NOT COPY or TRANSMIT

OPL Microprocessor Controls

REF	PART NO.	DESCRIPTION	COMMENTS
	M4689P3	Electronic OPL Control Kit	Non-CE and non-Australian models; Dual secondary transformers (M414228 Transformer for 100-240 VAC and M414229 Transformer for 380-480 VAC) must be used with this kit; Does not include overlay or harness
	M4695P3	Electronic OPL Control Kit	All other models
	M4457P3	RC Filter Kit	Includes (2) F330217P RC Filter and instructions
1	70364103	Bypass Harness	Non-CE models
2	70335301P	Control Panel Harness	Non-CE and non-Australian models
	70382701P	Control Panel Harness	All other models
3	M413930P	Ferrite Core Assembly	
4	70054	Nut	
5	70063501	Mounting Bracket	CE and Australian models; Used with 70382701P Control Panel Harness
6	M402797	Screw	CE and Australian models; 2 required; Used with 70382701P Control Panel Harness; 2 required
7	M412534	Relay	CE and Australian models; Used with 70382701P Control Panel Harness
8	70467801	Main Harness	Electric models need 55881 Harness Strap; Models through 7/31/11
	70441301	Main Harness	Electric models need 55881 Harness Strap; Models starting 8/1/11 through 1/1/12
9	70084303	Jumper Calibration Assembly	
10	70228401P	Control Kit	
11	70406501	Fuse	1.25 Amp
12	M414368P	Membrane Switch	
13	70175805	Control Plate Assembly	Non-CE and non-Australian models; Includes studs
	70175806	Control Plate Assembly	All other models; Includes studs
14	70115801	Overlay	L, P, S, and U models; Icon and English
	70130401	Overlay	L, P, S, and U models; Icon
	70128701	Overlay	H models; Icon and English
	70130601	Overlay	H models; Icon and English
	44130002	Overlay	G models
15	70414101	Foam Gasket	6 inches required; Mounts to front of overlay, even with edge

© Copyright, Alliance Laundry Systems LLC – DO NOT COPY or TRANSMIT

Coin Drop Components for MDC Models

G, H, I, K, L, N, P, and S Models with BB, BC, BK, BL, BW and BX Control Suffixes

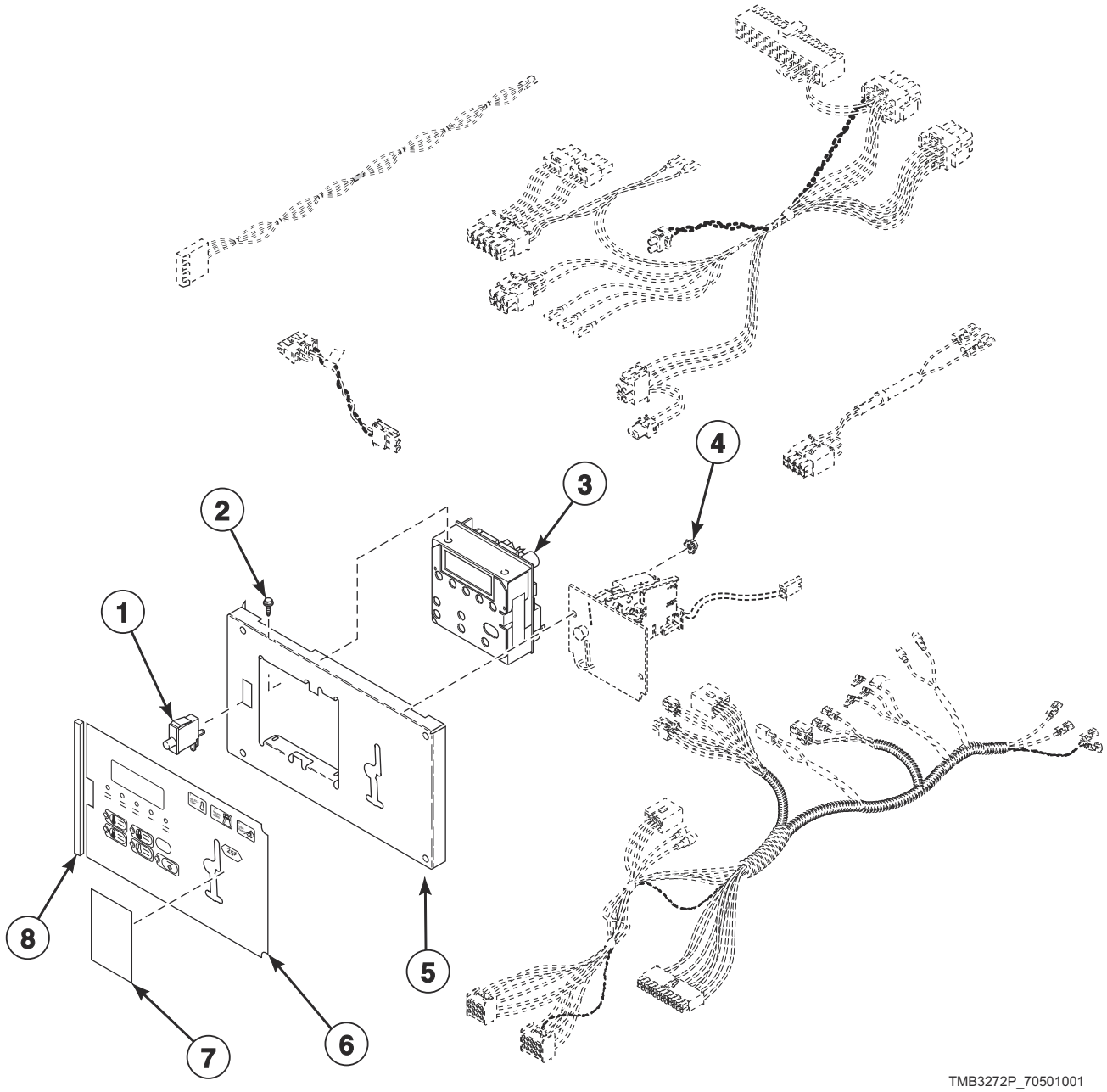

© Copyright, Alliance Laundry Systems LLC – DO NOT COPY or TRANSMIT

Coin Drop Components for MDC Models

REF	PART NO.	DESCRIPTION	COMMENTS
1	70413301	Pushbutton Switch	
2	D501524	Screw	4 required for mounting control
3	D514273P	Control Assembly	I models; Models starting 7/15/14
	D511867P	Control Assembly	I models through 7/14/14; All other models
	D510036P	Membrane Switch	Order to replace touchpad for 511867P Control Assembly
4	70054	Nut	3 required
5	70175807	Control Plate Assembly	
6	70257701	Overlay	L and S models; BC, BK*, BL* and BX control suffixes; Text; Single drop
	70261001	Overlay	L, N and S models; BC, BK*, BL* and BX control suffixes; Icon; Single drop
	70257702	Overlay	L and S models; BC and BX control suffixes; Text; Dual drop
	70261002	Overlay	L, N and S models; BC and BX control suffixes; Icon; Dual drop
	70258001	Overlay	H models; BC, BK*, BL* and BX control suffixes; Text; Single drop
	70261201	Overlay	H models; BC, BK*, BL* and BX control suffixes; Icon; Single drop
	70258002	Overlay	H models; BC and BX control suffixes; Text; Dual drop
	70261202	Overlay	H models; BC and BX control suffixes; Icon; Dual drop
	70259001	Overlay	P models; Models through 9/30/14; BK* and BL* control suffixes
	70508701	Overlay	P models; Models starting 10/1/14
	70537401	Overlay	North America P models; Single drop
	70537402	Overlay	North America P models; Dual drop
	70258101	Overlay	H models; BC, BK*, BL* and BX control suffixes; Text; Single drop
	70453001	Overlay	G and K models; Text; Single drop
	70453002	Overlay	G and K models; Text; Dual drop
	70491901	Overlay	I models; Models through 7/14/14; BC and BX control suffixes; Single drop
	70491902	Overlay	I models; Models through 7/14/14; BC and BX control suffixes; Dual drop
	70505201	Overlay	I models; Models starting 7/15/14; BC and BX control suffixes; Single drop
	70505202	Overlay	I models; Models starting 7/15/14; BC and BX control suffixes; Dual drop
7	39564	Nameplate	S models; BK* and BL* control suffixes; Cover
	70246301	Coin Cover Overlay	G, H, I, K, L and N models; BK* and BL* control suffixes; Cover
	70286701	Overlay	P models; Models through 9/30/14; BK* and BL* control suffixes; Cover
	70321001	Overlay	P models; Models through 9/30/14; BC** and BX** control suffixes; Single drop; Right side
	70129501	Overlay	P models; Models through 9/30/14; BC** and BX** control suffixes; Single drop; Left side
	70129601	Overlay	P models; Models through 9/30/14; BC** and BX** control suffixes; Dual drop
	70510501	Overlay	P models; Models starting 10/1/14; Single drop
	70510601	Overlay	P models; Models starting 10/1/14; Dual drop
	70510701	Overlay	P models; Models starting 10/1/14; World drop
	70510801	Overlay	P models; Models starting 10/1/14; BK* and BL* control suffixes
	70510901	Overlay	P models; Models starting 10/1/14; Blank for central pay
8	70414101	Foam Gasket	6 inches required; Mounts to front of overlay, even with edge

*** NOTE: BK and BL control suffixes requires an overlay and overlay cover specific to model.**

**** NOTE: P models with BC or BX control suffixes require an overlay and coin drop overlay.**

© Copyright, Alliance Laundry Systems LLC – DO NOT COPY or TRANSMIT

Coin Drop Components for MDC Models - Wire Harnesses

G, H, I, K, L, N, P, and S Models with BB, BC, BK, BL, BW and BX Control Suffixes

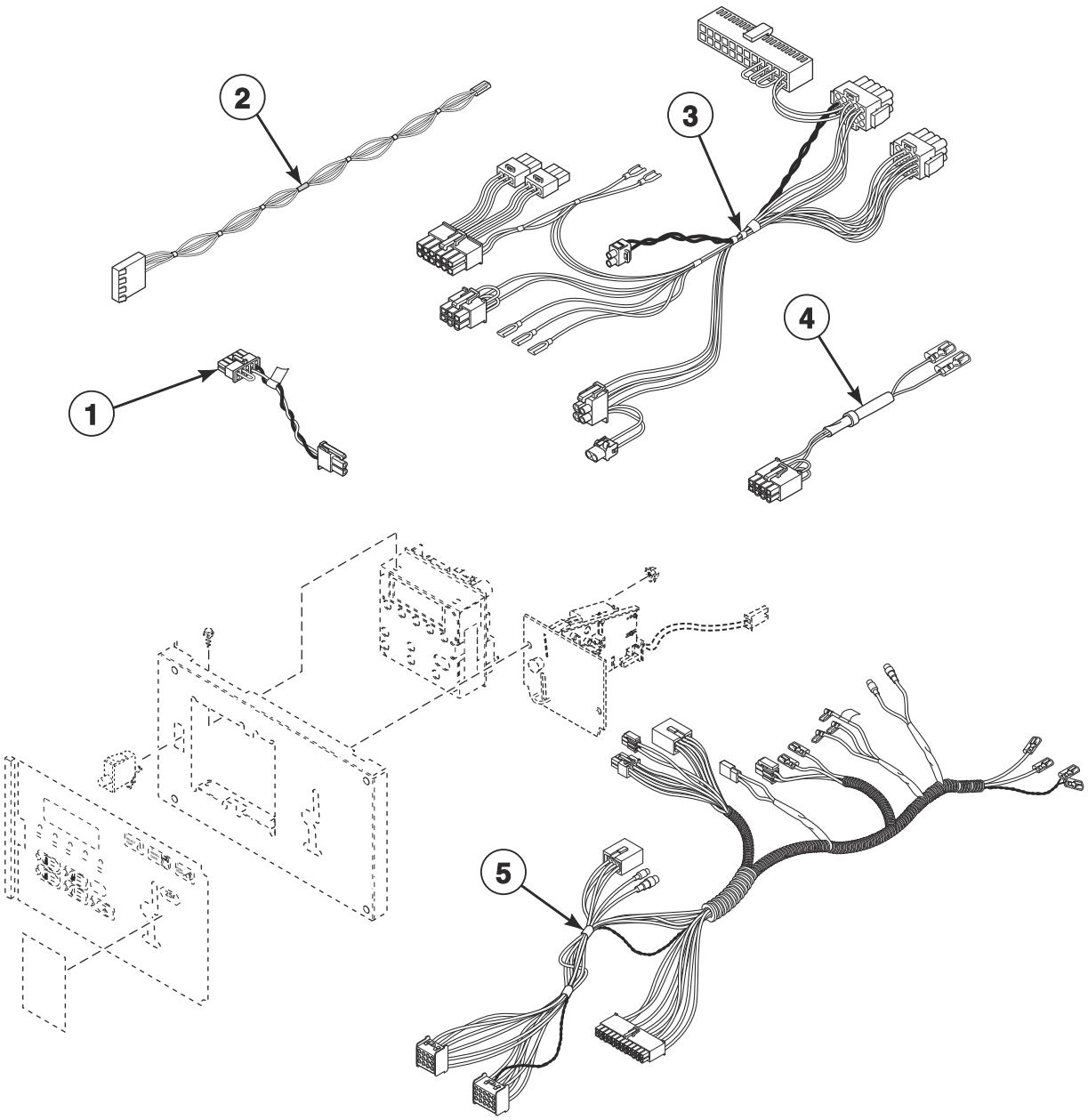

TMB3272PA_70501001

© Copyright, Alliance Laundry Systems LLC – DO NOT COPY or TRANSMIT

Coin Drop Components for MDC Models - Wire Harnesses

REF	PART NO.	DESCRIPTION	COMMENTS
1	70324601	Jumper Calibration Wire	
2	70484601	Central Pay Harness	BK and BL control suffixes
3	70368001P	Control Panel Harness	Non-CE and non-Australian models; Control panel to main harness
	70315501P	Control Panel Harness	All other models; Control panel to main harness
4	70364104P	Coin Vault Switch Harness	Non-CE models
5	70467801	Main Harness	Electric models need 55881 Harness Strap; Models through 7/31/11 and starting again 7/9/12
	70441301	Main Harness	Electric models need 55881 Harness Strap; Models starting 8/1/11 through 7/8/12

© Copyright, Alliance Laundry Systems LLC – DO NOT COPY or TRANSMIT

BY and BZ Control Option for MDC Models

H, I, K, L, N, P and S Models

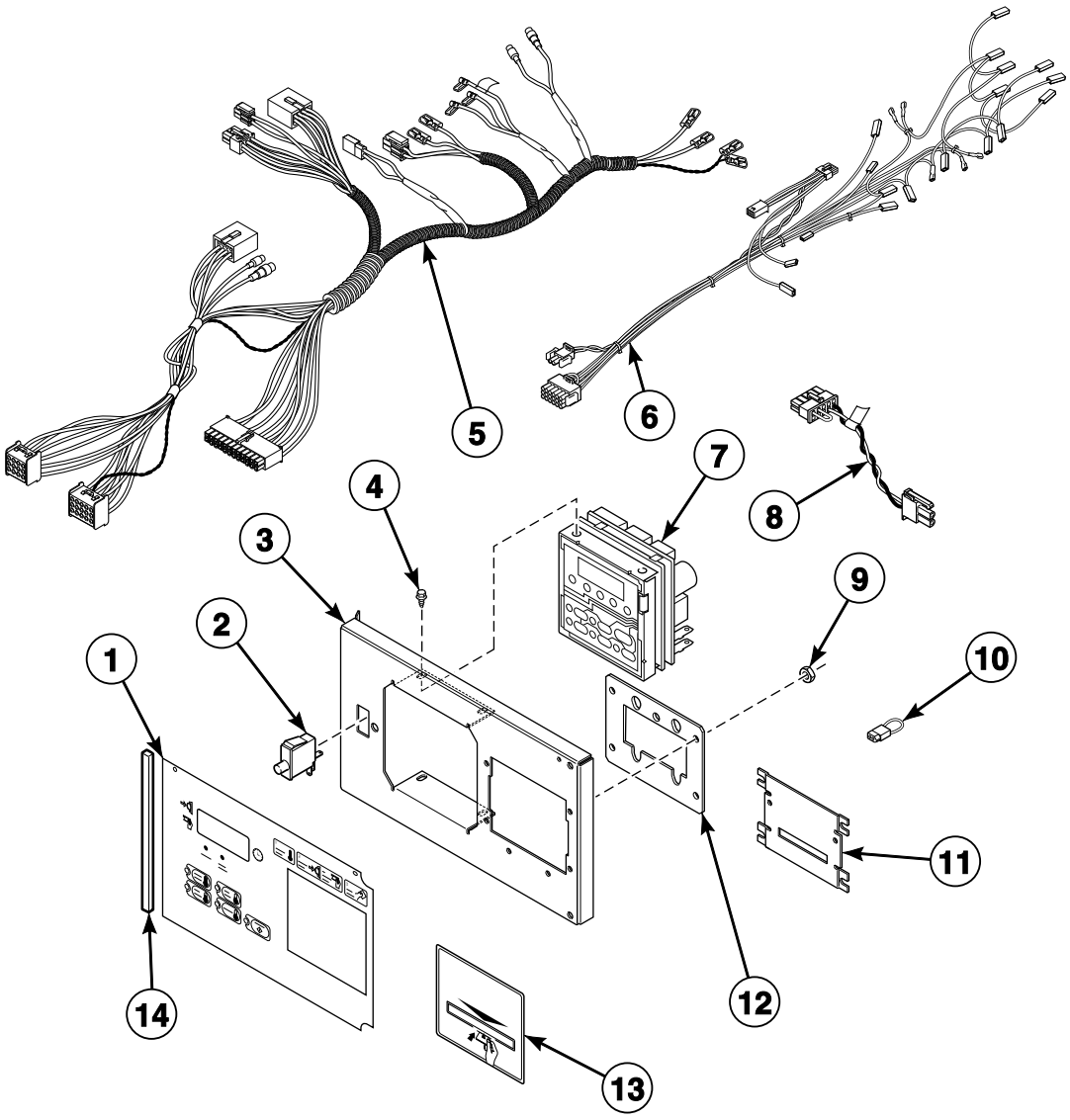

TMB3016P_70501001

© Copyright, Alliance Laundry Systems LLC – DO NOT COPY or TRANSMIT

BY and BZ Control Option for MDC Models

REF	PART NO.	DESCRIPTION	COMMENTS
1	70261003	Overlay	N models; Icon
	70257703	Overlay	L and S models; Text or icon
	70258003	Overlay	H models; Text or icon
	70453101	Overlay	K models
	70491903	Overlay	I models; Models through 7/14/14
	70505203	Overlay	I models; Models starting 7/15/14
	70509701	Overlay	P models
	70537403	Overlay	North America P models
2	70413301	Pushbutton Switch	
3	70497201	Control Plate Assembly	
4	D501524	Screw	4 required
5	70467801	Main Harness	Electric models need 55881 Harness Strap; Models through 7/31/11 and starting again 7/9/12
	70441301	Main Harness	Electric models need 55881 Harness Strap; Models starting 8/1/11 through 7/8/12
6	70368001P	Control Panel Harness	Non-CE and non-Australian models
	70315501P	Control Panel Harness	All other models
7	D514273P	Control Assembly	I models; Models starting 7/15/14
	D511867P	Control Assembly	I models through 7/14/14; All other models
	D510036P	Membrane Switch	Order to replace touchpad for D511867P Control Assembly
8	70324601	Jumper Calibration Wire	
9	70054	Nut	
10	70364103	Bypass Harness	Non-CE models
11	44089501	Slot Card Plate Assembly	Included in literature packet
12	70208801	Mounting Plate	
13	70334201	Card Reader Overlay	Black; Included in literature packet
	70334301	Card Reader Overlay	Gray; Included in literature packet
	70511001	Overlay	P models; With card slot
14	70414101	Foam Gasket	6 inches required; Mounts to front of overlay, even with edge

© Copyright, Alliance Laundry Systems LLC – DO NOT COPY or TRANSMIT

Coin Drops

All Models Except U Models

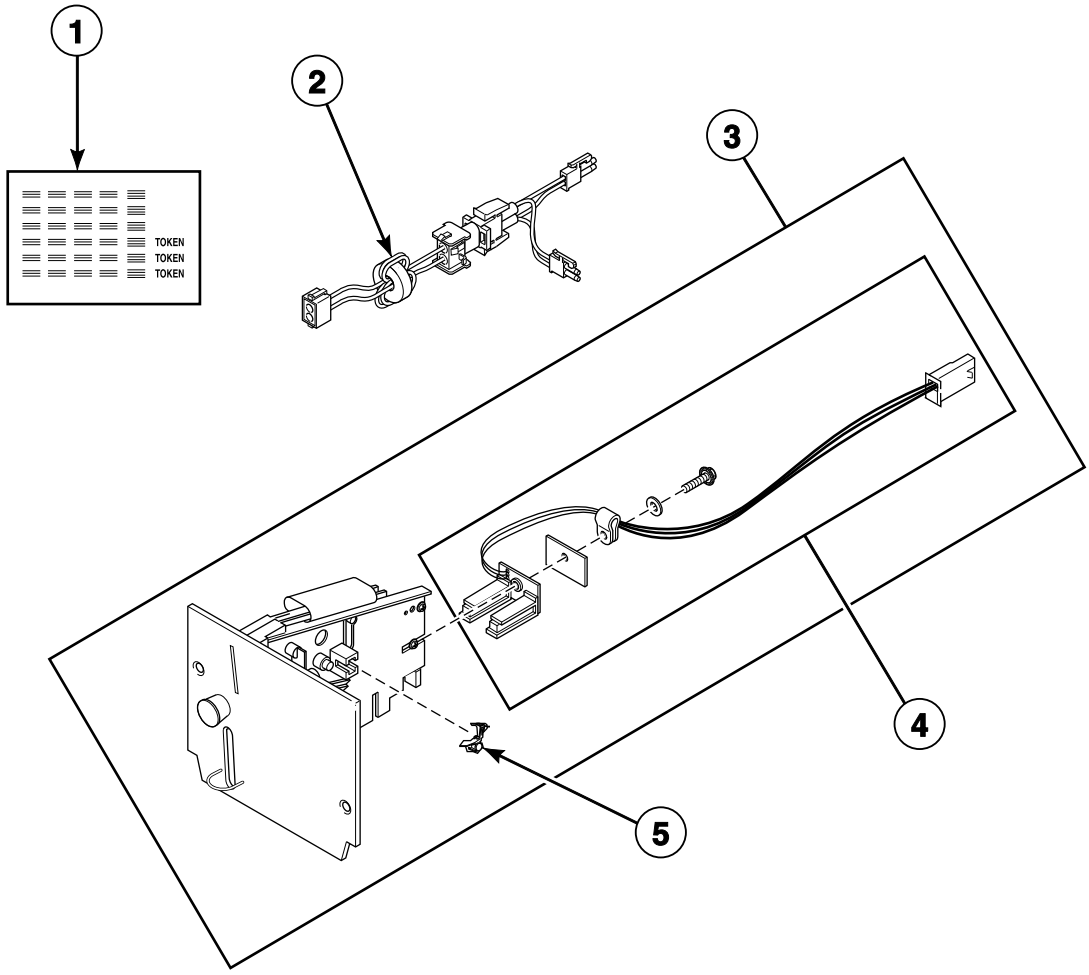

TMB2921P_70501001

© Copyright, Alliance Laundry Systems LLC – DO NOT COPY or TRANSMIT

Coin Drops

REF	PART NO.	DESCRIPTION	COMMENTS
1	38725	Coin Identification Paper	
2	44065801	Electronic Coin Drop Harness	Models through 4/14/09
3	70294103P	Electronic Coin Drop Assembly	United Kingdom (default) and Europe
	70294104	Electronic Coin Drop Assembly	Europe (default), Denmark and Norway
	CK099	Electronic Coin Drop Kit	Australia (default), New Zealand, Hong Kong, South Korea and Malaysia
	70513306	Electronic Coin Drop Assembly	Mexico (default), Ecuador and United States
	70294107	Electronic Coin Drop Assembly	Lithuania (default), Latvia and Europe
	70294111	Electronic Coin Drop Assembly	Euro; .10, .20, .50, 1.00 and 2.00
	70513311	Electronic Coin Drop Assembly	Malaysia (default) and China
	70294117	Electronic Coin Drop Assembly	Russia; 5.00 and 10.00
	70294119	Electronic Coin Drop Assembly	Thailand; 1, 5 and 10 Baht
	70294120	Electronic Coin Drop Assembly	Chile; Chelean peso
	70294121	Electronic Coin Drop Assembly	Singapore
	70441601P	Coin Drop	USA; $.25
	70256402P	Coin Drop	USA; Dual; $.25 and $1.00
	70429001	Coin Drop	B models; USA
	38475	Coin Drop Assembly	Japan; 100 yen
	38519	Coin Drop Assembly	Japan; 100 and 500 yen
	38467	Coin Drop Assembly	Australia; .20 and 1.00
	70447301	Coin Drop Assembly	Australia; 1.00 and 2.00
	70482401	Coin Drop Assembly	New Zealand; 1.00 and 2.00
	CK097	Coin Drop Kit	Token; Jeton; Grooves on the face of the token; HU, LU, PU and SU models
	210195	Coin Drop Assembly	Euro; .20 and 1.00
	210196	Coin Drop Assembly	Euro; .50 and 1.00
	38462P	Coin Drop Assembly	Token; STD-118-1; .880 diameter x .079 thick; Brass
	38463	Coin Drop Assembly	Token; STD-118-5; .990 diameter x .081 thick; Silver
	70471601	Coin Drop Assembly	Token; 7K
	38464P	Coin Drop Assembly	Canada; .25
	70441602	Coin Drop Assembly	Canada; .25 and 1.00
	38472	Coin Drop Assembly	England; 20 pence and 1 pound
	N/A	Coin Drop Assembly	Denmark; 1 and 5 DKK; May replace with 70294104P Electronic Coin Drop Assembly
	38521	Coin Drop Assembly	Korea; 100 and 500 won
	38963P	Coin Drop	Token STD-118-16 not available; Replacement for 38963P Coin Drop only
	39157	Coin Drop Assembly	Israel; Shekel
	CK114	Coin Drop Assembly	Singapore; Old 1.00
	CK123	Coin Drop Kit	Singapore; New 1.00
	N/A	Coin Drop Assembly	Taiwan; Dual; 5 and 10 NT; May replace with CK113 Electronic Coin Drop Kit
	CK077	Coin Drop Kit	Taiwan; 10 NT
4	200674P	Opto Coupler	
5	201595P	Wire Guard	

N/A = Part no longer available

© Copyright, Alliance Laundry Systems LLC – DO NOT COPY or TRANSMIT

Coin Drop Kits

All Models Except U Models

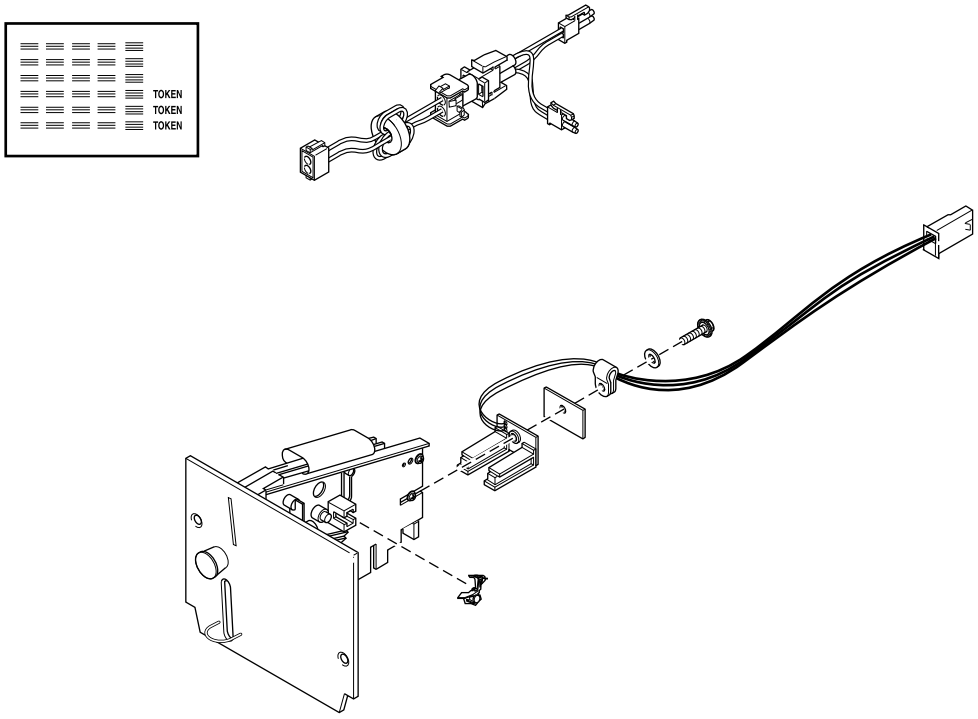

TMB2921PA_70501001

© Copyright, Alliance Laundry Systems LLC – DO NOT COPY or TRANSMIT

Coin Drop Kits

REF	PART NO.	DESCRIPTION	COMMENTS
	CK115	Electronic Coin Drop Kit	United States and Canada
	CK099	Electronic Coin Drop Kit	Australia (default), New Zealand, Hong Kong, South Korea and Malaysia
	CK100	Electronic Coin Drop Kit	United Kingdom (default) and Europe
	CK101	Electronic Coin Drop Kit	Europe (default), Denmark and Norway
	CK103	Electronic Coin Drop Kit	Lithuania (default), Latvia and Europe
	CK125	Electronic Coin Drop Kit	South Africa
	CK109	Electronic Coin Drop Kit	Euro
	CK113	Electronic Coin Drop Kit	Japan and Taiwan
	CK116	Electronic Coin Drop Kit	Malaysia (default) and China
	CK117	Electronic Coin Drop Kit	Russia
	CK118	Electronic Coin Drop Kit	Philippine
	CK119	Electronic Coin Drop Kit	Thailand
	CK120	Electronic Coin Drop Kit	Chile
	CK121	Electronic Coin Drop Kit	Singapore
	CK122	Coin Drop Kit	New Zealand; 1.00 and 2.00

© Copyright, Alliance Laundry Systems LLC – DO NOT COPY or TRANSMIT

Coin Drop Components for NetMaster Models

KT Models Through Serial No. 1101018349 and S Models Through Serial No. 0904002963
NC, NX, ZC and ZX Control Suffixes

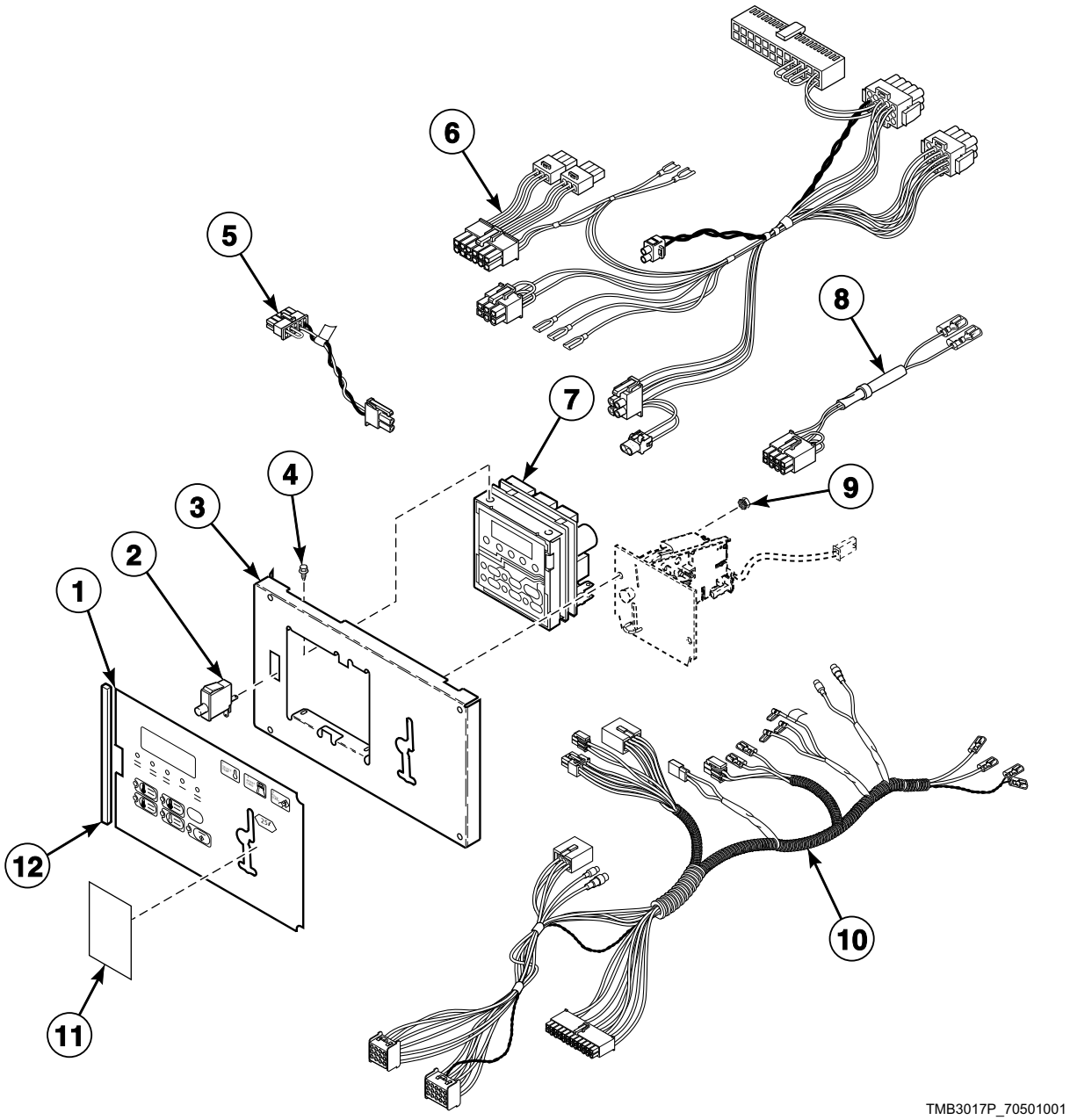

© Copyright, Alliance Laundry Systems LLC – DO NOT COPY or TRANSMIT

Coin Drop Components for NetMaster Models

REF	PART NO.	DESCRIPTION	COMMENTS
1	70184301	Overlay	ST models; Single drop
	70184302	Overlay	ST models; Dual drop
	44144301	Overlay	KT models; NC and NX control suffixes; Single drop
	44144302	Overlay	KT models; NC and NX control suffixes; Dual drop
2	70413301	Pushbutton Switch	
3	70175807	Control Plate Assembly	
	70419701	Control Plate Assembly	KT models; NC and NX control suffixes
4	D501524	Screw	For mounting NetMaster control
5	70324601	Jumper Calibration Wire	
6	70368001P	Control Panel Harness	KT and ST models
	70315501P	Control Panel Harness	SA and SU models
7	D505905P	Control Kit	
	D510036P	Membrane Switch	Order to replace touchpad for D510034 Control Assembly in D505905P Control Kit
8	70364104P	Coin Vault Switch Harness	Non-CE models
9	70054	Nut	
10	70467801	Main Harness	Electric models need 55881 Harness Strap
11	44147801	Overlay	KT models
12	70414101	Foam Gasket	6 inches required; Mounts to front of overlay, even with edge

© Copyright, Alliance Laundry Systems LLC – DO NOT COPY or TRANSMIT

Card Reader Components for NetMaster Models

KT Models Through Serial No. 1101018349 and S Models Through Serial No. 0904002963
NR, NY, ZR and ZY Control Suffixes

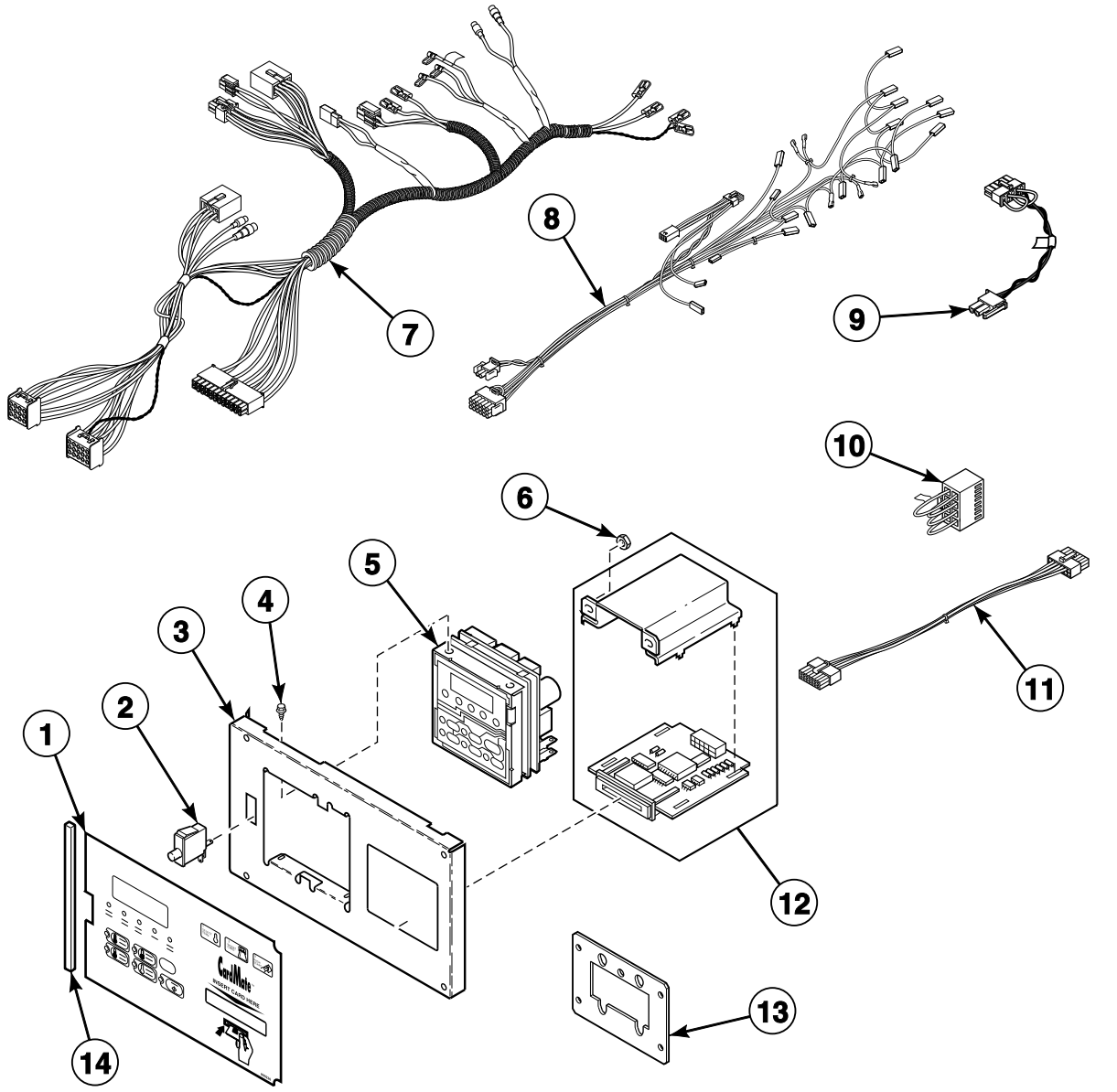

TMB3018P_70501001

© Copyright, Alliance Laundry Systems LLC – DO NOT COPY or TRANSMIT

Card Reader Components for NetMaster Models

REF	PART NO.	DESCRIPTION	COMMENTS
1	N/A	Overlay	ST models; Card reader ready
	70184401	Overlay	ST models; Card reader
	44149301	Overlay	KT models; NY control suffix
2	70413301	Pushbutton Switch	
3	N/A	Control Plate Assembly	Card reader
	70497201	Control Plate Assembly	Card ready
4	D501524	Screw	
5	D505905P	Control Kit	
	D510036P	Membrane Switch	Order to replace touchpad for D510034 Control Assembly in D505905P Control Kit
6	70054	Nut	
7	70467801	Main Harness	Electric models need 55881 Harness Strap
8	70368001P	Control Panel Harness	ST models
	70315501P	Control Panel Harness	SA and SU models
9	70324601	Jumper Calibration Wire	
10	70364103	Bypass Harness	NR and ZR control suffixes; Non-CE models
11	70206601	Card Reader Network Harness Assembly	Card reader to network board
	70211801	Card Reader Harness Assembly	Card reader to control
12	D510068P	Card Reader and Bracket Assembly	
13	70208801	Mounting Plate	Use with 70348801 Control Plate Assembly
14	70414101	Foam Gasket	6 inches required; Mounts to front of overlay, even with edge

N/A = Part no longer available

© Copyright, Alliance Laundry Systems LLC – DO NOT COPY or TRANSMIT

Network Board for NetMaster Models

SA and ST Models Through Serial No. 0904002963 with ZC, ZR, ZX and ZY Control Suffixes

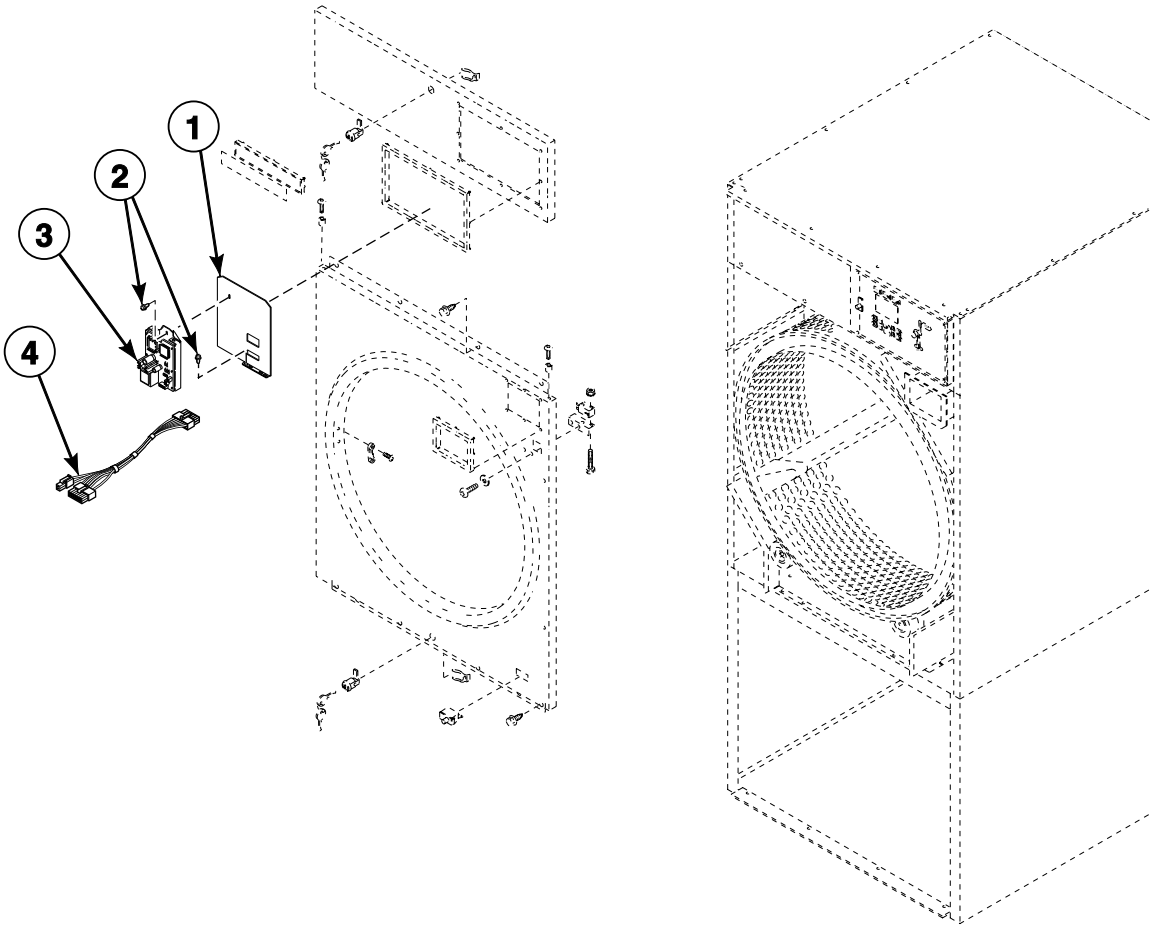

TMB2387P_70501001

© Copyright, Alliance Laundry Systems LLC – DO NOT COPY or TRANSMIT

Network Board for NetMaster Models

REF	PART NO.	DESCRIPTION	COMMENTS
	800246	Communication Wire Harness Assembly	
1	70201401	Network Plug Support	
2	430497	Screw	
3	210016P	Network Board Assembly	
4	800217	Network Wire Harness Assembly	

© Copyright, Alliance Laundry Systems LLC – DO NOT COPY or TRANSMIT

Coin Drop Components for Quantum Control

M and S Models with LB, LC, LK, LL, LW, LX, WB, WC, WK, WL, WW and WX Control Suffixes

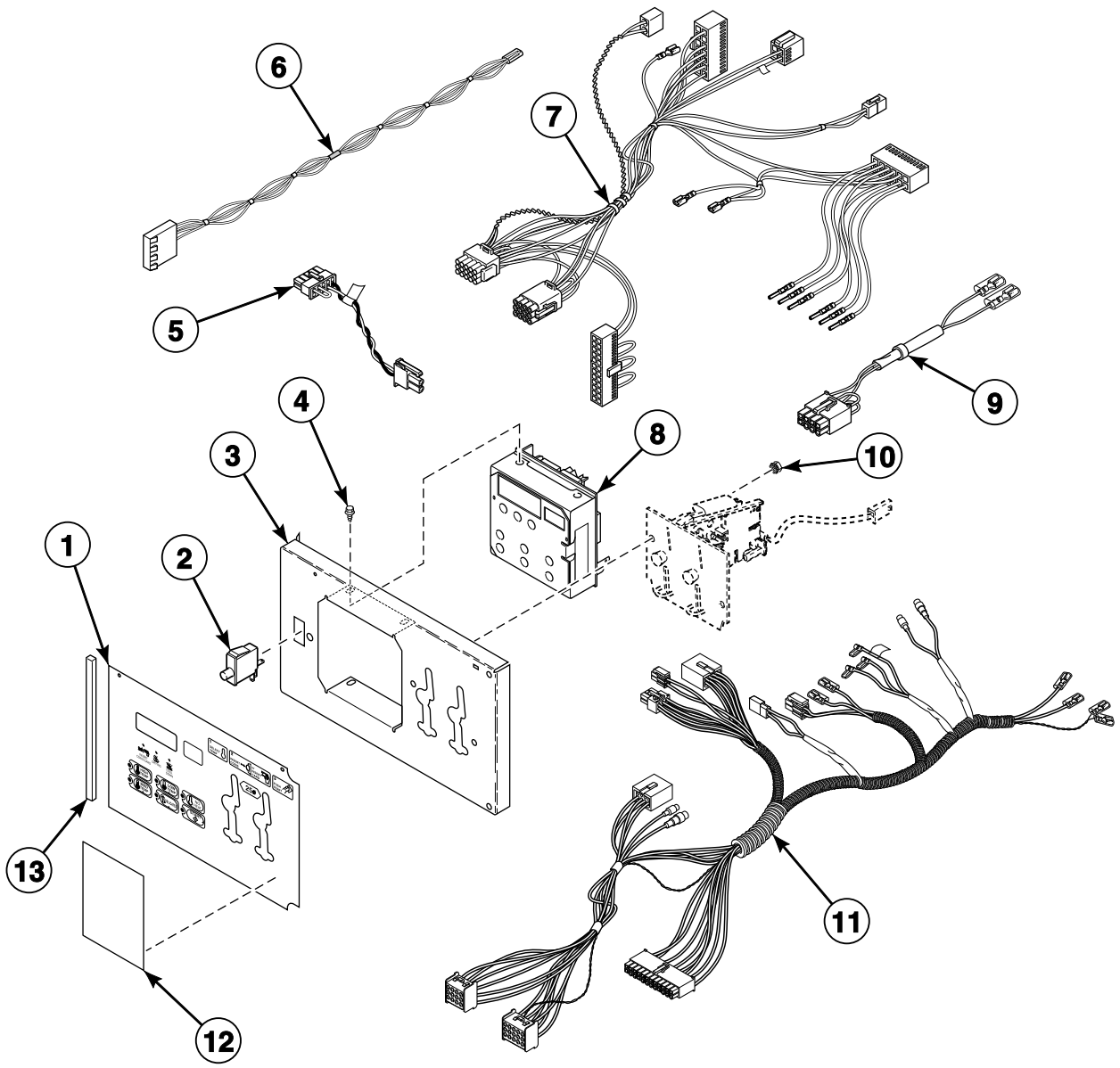

TMB3273P_70501001

© Copyright, Alliance Laundry Systems LLC – DO NOT COPY or TRANSMIT

Coin Drop Components for Quantum Control

REF	PART NO.	DESCRIPTION	COMMENTS
	NK206	Network Retrofit Kit	LC and LX control suffixes; Wired
	NK220	Network Controller Kit	LC and LX control suffixes; Wired
	NK301	Wireless Network Kit	LC and LX control suffixes; Wireless
	NK320	Ethernet Gateway Kit	LC and LX control suffixes; Wireless
	NK330	USB Gateway Kit	LC and LX control suffixes; Wireless
	203346	USB IR Interface Kit	
1	44194801	Control Overlay	Model ST030D
	70449501	Control Overlay	Model ST030D; M models
	70473301	Control Overlay	Model ST030D
	70410001	Control Overlay	Single drop; All models except M models and ST030D
	70410002	Control Overlay	Dual drop; All models except M models and ST030D
2	70413301	Pushbutton Switch	
3	70291001P	Control Plate Kit	
4	D501524	Screw	For mounting item 8
5	70324601	Jumper Calibration Wire	
6	70484601	Central Pay Harness	LK, LL, WK and WL control suffixes
7	70410401P	Control Panel Harness	
8	70450501P	Control Assembly	Nonreversing
	70450503	Control Assembly	Reversing
9	70364104P	Coin Vault Switch Harness	Non-CE models
10	70054	Nut	
11	70467801	Main Harness	Electric models need 55881 Harness Strap; Models through 7/31/11 and starting again 7/9/12
	70441301	Main Harness	Electric models need 55881 Harness Strap; Models starting 8/1/11 through 7/8/12
12	39564	Nameplate	LK, LL, WK and WL control suffixes; Cover
13	70414101	Foam Gasket	6 inches required; Mounts to front of overlay, even with edge

© Copyright, Alliance Laundry Systems LLC – DO NOT COPY or TRANSMIT

Card Reader Components for Quantum Control

M and S Models with LY, LZ, WY and WZ Control Suffixes

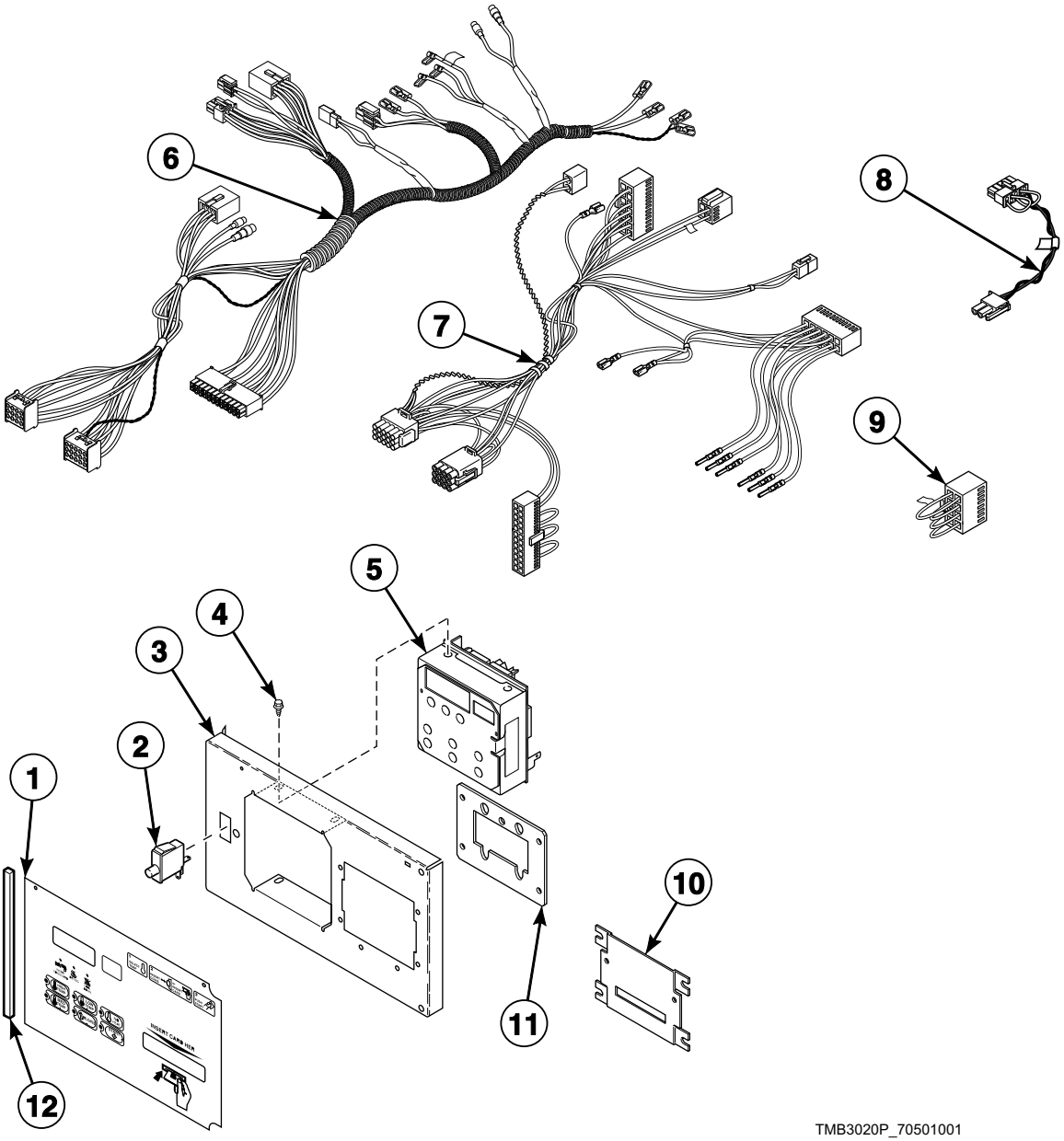

© Copyright, Alliance Laundry Systems LLC – DO NOT COPY or TRANSMIT

Card Reader Components for Quantum Control

REF	PART NO.	DESCRIPTION	COMMENTS
	NK206	Network Retrofit Kit	LY control suffix; Wired
	NK220	Network Controller Kit	LYcontrol suffix; Wired
	NK301	Wireless Network Kit	LY control suffix; Wireless
	NK320	Ethernet Gateway Kit	LY control suffix; Wireless
	NK330	USB Gateway Kit	LY control suffix; Wireless
	203346	USB IR Interface Kit	
1	70410003	Overlay	
2	70413301	Pushbutton Switch	
3	70497201	Control Plate Assembly	
4	D501524	Screw	
5	70450501P	Control Assembly	Nonreversing
	70450503	Control Assembly	Reversing
6	70467801	Main Harness	Electric models need 55881 Harness Strap; Models through 7/31/11 and starting again 7/9/12
	70441301	Main Harness	Electric models need 55881 Harness Strap; Models starting 8/1/11 through 7/8/12
7	70410401P	Control Panel Harness	
8	70324601	Jumper Calibration Wire	
9	70364103	Bypass Harness	Non-CE models
10	44089501	Slot Card Plate Assembly	
11	70208801	Mounting Plate	
12	70414101	Foam Gasket	6 inches required; Mounts to front of overlay, even with edge

© Copyright, Alliance Laundry Systems LLC – DO NOT COPY or TRANSMIT

Network Board

H, M and S Models with WB, WC, WW, WX, WY, WZ, ZB, ZC, ZW, ZX, ZY and ZZ Control Suffixes

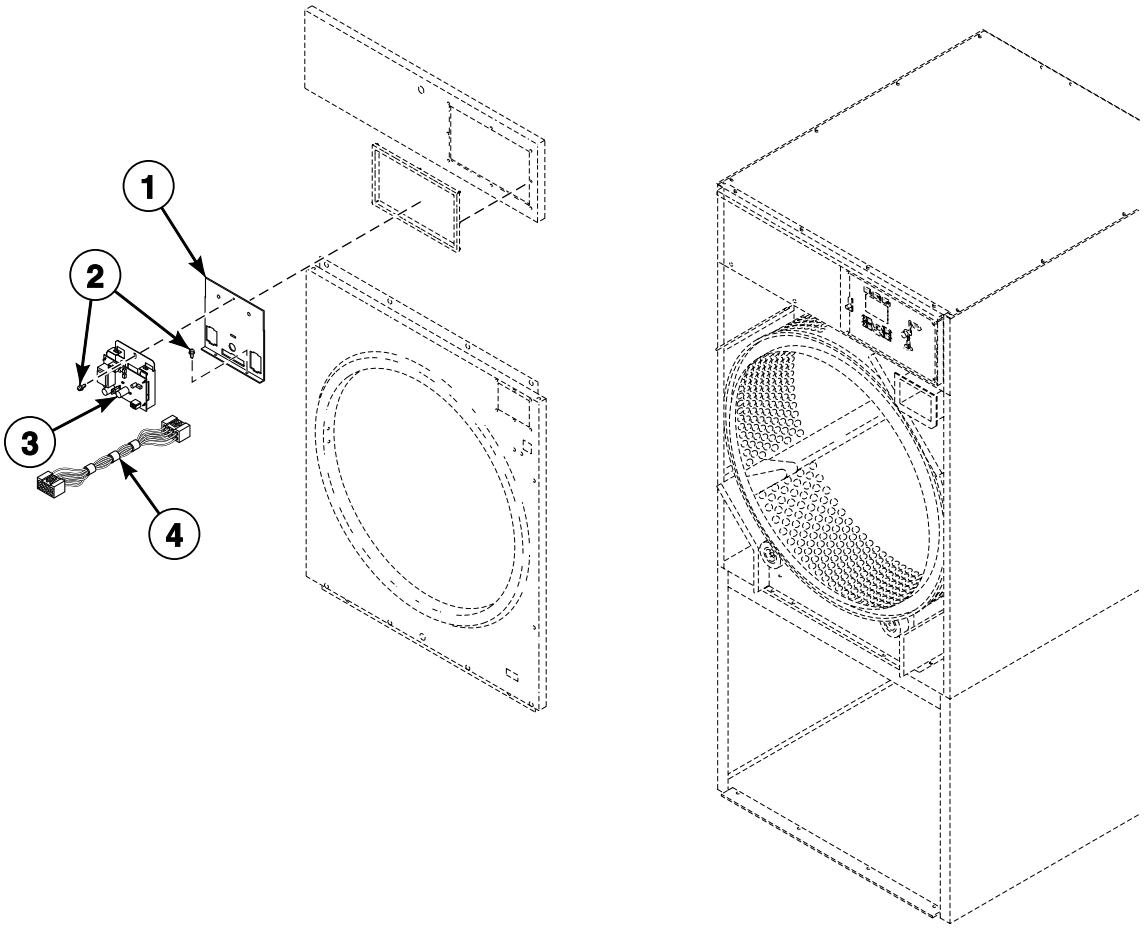

TMB2928P_70501001

© Copyright, Alliance Laundry Systems LLC – DO NOT COPY or TRANSMIT

Network Board

REF	PART NO.	DESCRIPTION	COMMENTS
	800246	Communication Wire Harness Assembly	Wired; M and S models
1	70307002	Control Housing Cover	
2	430497	Screw	Wired; M and S models
	D503661	Screw	Wireless
3	201341	Network Board Assembly	Wired; M and S models
	202335	Wireless Transceiver Assembly	Wireless
4	44088501P	Network Wire Harness Assembly	

© Copyright, Alliance Laundry Systems LLC – DO NOT COPY or TRANSMIT

Communication Board

S Models Through Serial No. 0904002963 with ZC and ZR Control Suffixes
M and S Models with WB and WC Control Suffixes

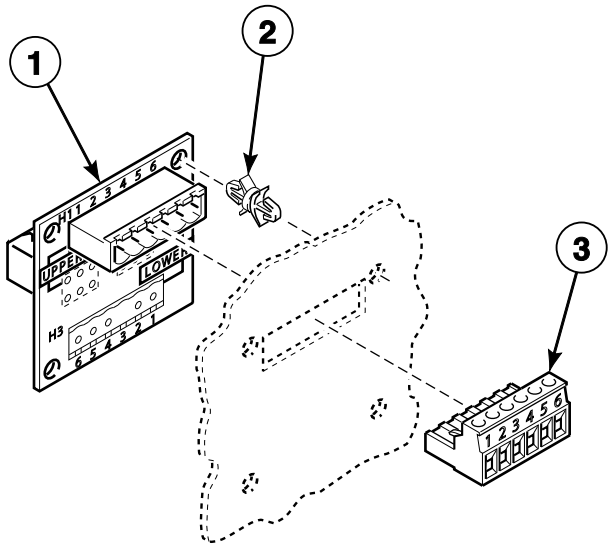

TMB1935P_70501001

© Copyright, Alliance Laundry Systems LLC – DO NOT COPY or TRANSMIT

Communication Board

REF	PART NO.	DESCRIPTION	COMMENTS
	210157P	Network Board	For desktop PC
	210165	Network Cable	For laptop PC
	210097	Communication Board	
1	210095P	Communication Board	
2	210098	PC Board Standoff	4 required
3	210099	Communication Connector	

© Copyright, Alliance Laundry Systems LLC – DO NOT COPY or TRANSMIT

Coin Drop Components for Galaxy 600 Control

H Models with KB, KC, KK, KL, KW, KX, ZB, ZC, ZK, ZL, ZW an ZX Control Suffixes

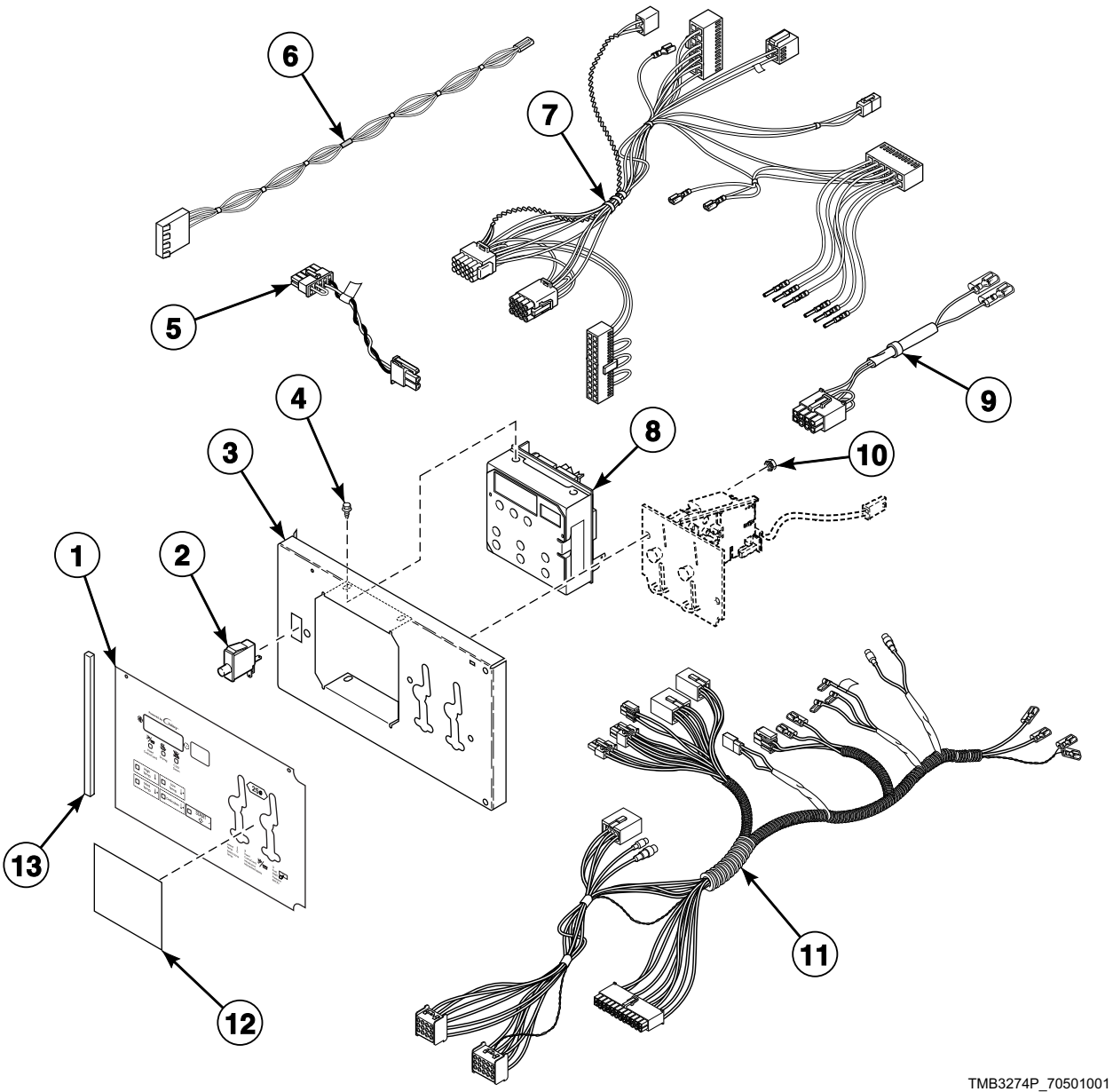

© Copyright, Alliance Laundry Systems LLC – DO NOT COPY or TRANSMIT

Coin Drop Components for Galaxy 600 Control

REF	PART NO.	DESCRIPTION	COMMENTS
	NK301	Wireless Network Kit	ZC and ZX control suffixes; Wireless
	NK320	Ethernet Gateway Kit	ZC and ZX control suffixes; Wireless
	203346	USB IR Interface Kit	
1	70473001	Control Overlay	Single drop; Gray
	70473002	Control Overlay	Dual drop; Gray
	70504501	Overlay	Single drop; Gray/green
	70504502	Overlay	Dual drop; Gray/green
	70504601	Overlay	Single drop; Green
	70504602	Overlay	Dual drop; Green
2	70413301	Pushbutton Switch	
3	70291001P	Control Plate Kit	
4	D501524	Screw	For mounting item 8
5	70324601	Jumper Calibration Wire	
6	70484601	Central Pay Harness	KK, KL, ZK and ZL control suffixes
7	70410401P	Control Panel Harness	
8	70450502P	Control Assembly	Nonreversing
	70450504	Control Assembly	Reversing
9	70364104P	Coin Vault Switch Harness	Non-CE models
10	70054	Nut	
11	70467801	Main Harness	
12	70246301	Coin Cover Overlay	KK, KL, ZK and ZL control suffixes; Cover
13	70414101	Foam Gasket	6 inches required; Mounts to front of overlay, even with edge

© Copyright, Alliance Laundry Systems LLC – DO NOT COPY or TRANSMIT

Card Reader Components for Galaxy 600 Control

H Models with KY, KZ, ZY and ZZ Control Suffixes

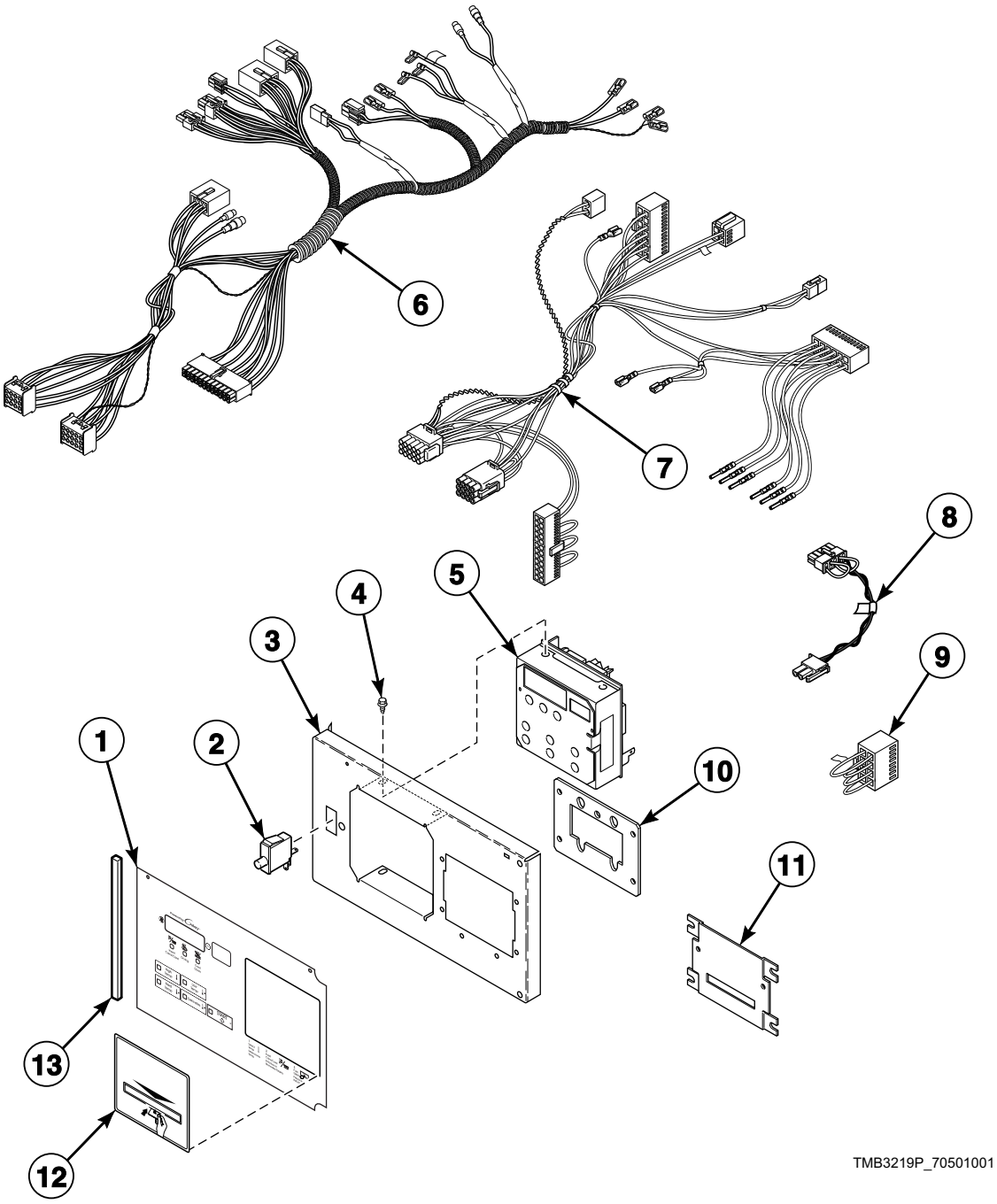

© Copyright, Alliance Laundry Systems LLC – DO NOT COPY or TRANSMIT

Card Reader Components for Galaxy 600 Control

REF	PART NO.	DESCRIPTION	COMMENTS
	NK301	Wireless Network Kit	ZY control suffix; Wireless
	NK320	Ethernet Gateway Kit	ZY control suffix; Wireless
	203346	USB IR Interface Kit	
1	70473003	Control Overlay	Gray
	70504503	Overlay	Gray/green
	70504603	Overlay	Green
2	70413301	Pushbutton Switch	
3	70497201	Control Plate Assembly	
4	D501524	Screw	
5	70450502P	Control Assembly	Nonreversing
	70450504	Control Assembly	Reversing
6	70467801	Main Harness	
7	70410401P	Control Panel Harness	
8	70324601	Jumper Calibration Wire	
9	70364103	Bypass Harness	Non-CE models
10	70208801	Mounting Plate	
11	44089501	Slot Card Plate Assembly	
12	70334301	Card Reader Overlay	
13	70414101	Foam Gasket	6 inches required; Mounts to front of overlay, even with edge

© Copyright, Alliance Laundry Systems LLC – DO NOT COPY or TRANSMIT

UniLinc Control

U Models with RU and UO Control Suffixes

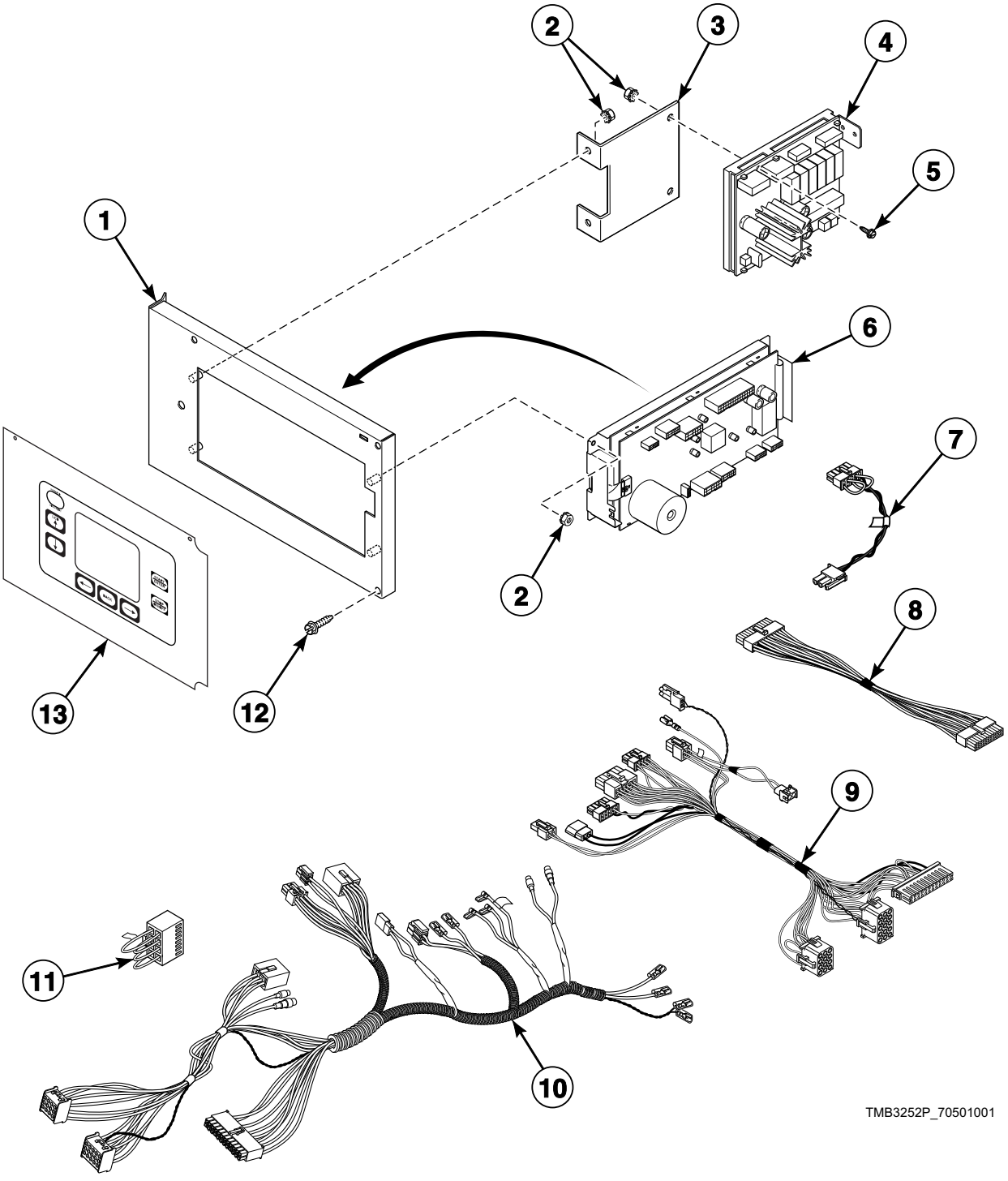

© Copyright, Alliance Laundry Systems LLC – DO NOT COPY or TRANSMIT

UniLinc Control

REF	PART NO.	DESCRIPTION	COMMENTS
	NK206	Network Retrofit Kit	Wired
	NK220	Network Controller Kit	Wired
	NK301	Wireless Network Kit	Wireless
	NK320	Ethernet Gateway Kit	Wireless
	NK330	USB Gateway Kit	Wireless
	203346	USB IR Interface Kit	
1	70475601	Control Plate Assembly	
2	70054	Nut	
3	70440601	Output Bracket	
4	70434101P	Control Assembly	
5	D501524	Screw	
6	70454001P	Control Assembly	
7	70324601	Jumper Calibration Wire	
8	44186101	Output Harness	Use between item 4 and item 6
9	44240301	Control Panel Harness	Goes from item 6 to main harness
10	70441301	Main Harness	Models through 7/8/12
	70467801	Main Harness	Models starting 7/9/12
11	70364103	Bypass Harness	Non-CE models
12	70069901	Screw	
13	70432201	Overlay	Models through 8/17/14
	70499001	Overlay	Models starting 8/18/14

© Copyright, Alliance Laundry Systems LLC – DO NOT COPY or TRANSMIT

LED OPL Control

B, C, H, I, N, S and U Models
G, K, L, P and Y Models Starting 1/16/12
Models with EO and RE Control Suffixes

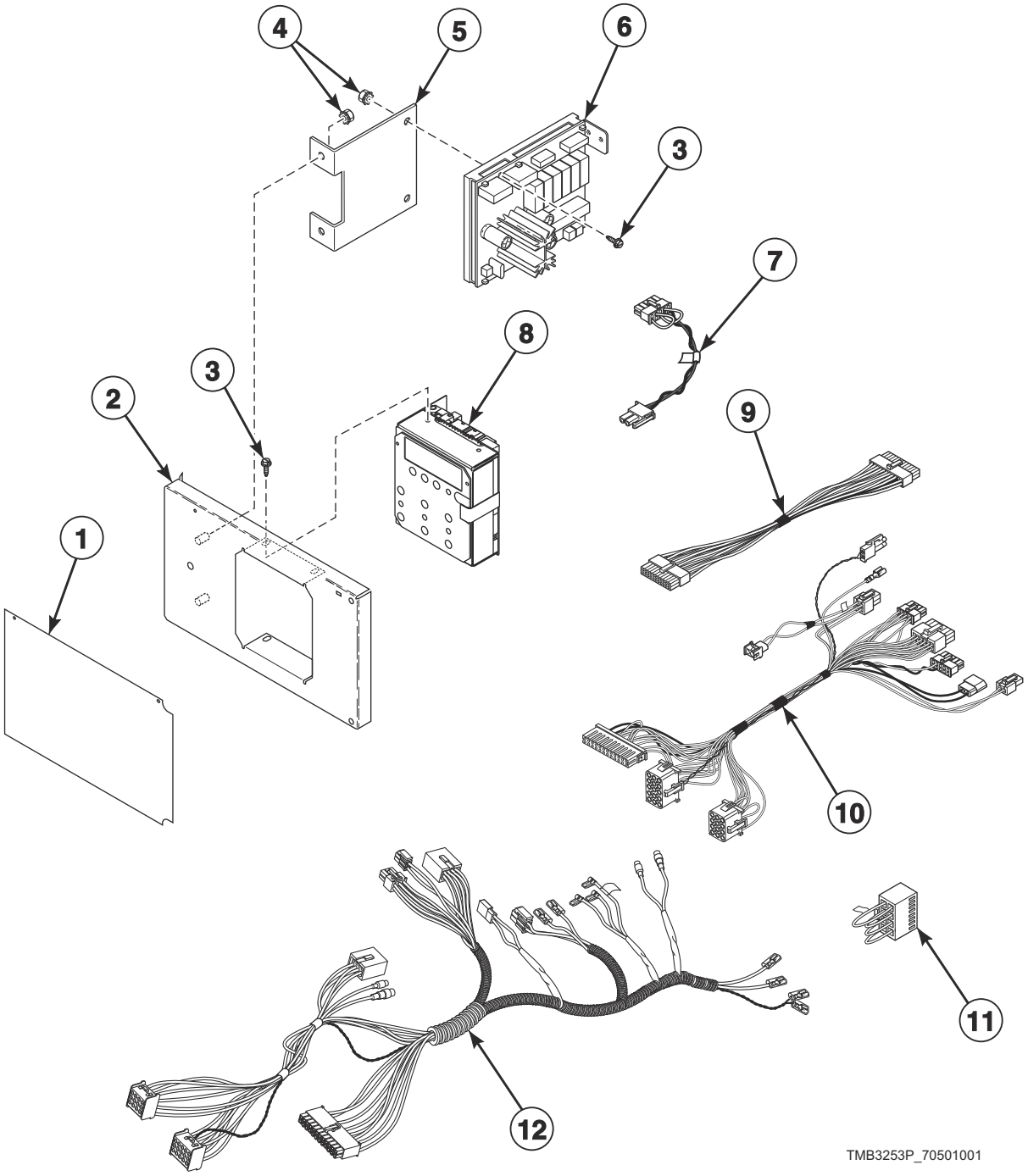

© Copyright, Alliance Laundry Systems LLC – DO NOT COPY or TRANSMIT

LED OPL Control

REF	PART NO.	DESCRIPTION	COMMENTS
	203346	USB IR Interface Kit	
1	70445001	Overlay	S models; EO control suffix
	70445002	Overlay	S models; RE control suffix
	70445003	Overlay	H models; EO control suffix
	70445004	Overlay	H models; RE control suffix
	70462402	Overlay	B, C and I models; Models through 7/14/14; EO control suffix
	70462401	Overlay	B, C and I models; Models through 7/14/14; RE control suffix
	70504902	Overlay	B, C and I models; Models starting 7/15/14; EO control suffix
	70504901	Overlay	B, C and I models; Models starting 7/15/14; RE control suffix
	70462701	Overlay	U models; Models through 8/17/14; RE control suffix
	70493702	Overlay	U models; EO control suffix
	70493701	Overlay	U models; Models starting 8/18/14; RE control suffix
	70462902	Overlay	G and K models; EO control suffix
	70462901	Overlay	G and K models; RE control suffix
	70472402	Overlay	P models; Models through 9/30/14; EO control suffix
	70472401	Overlay	P models; Models through 9/30/14; RE control suffix
	70508602	Overlay	L models starting 1/29/15 through 5/31/15; P models starting 10/1/14 through 5/31/15; EO control suffix
	70508601	Overlay	L models starting 1/29/15 through 5/31/15; P models starting 10/1/14 through 5/31/15; RE control suffix
	70526002	Overlay	L and P models starting 6/1/15; EO control suffix
	70526001	Overlay	L and P models starting 6/1/15; RE control suffix
	70472202	Overlay	N and Y models; L models through 1/28/15; EO control suffix
	70472201	Overlay	N and Y models; L models through 1/28/15; RE control suffix
2	70440901	Control Plate and Studs Assembly	
3	D501524	Screw	
4	70054	Nut	
5	44223101	Output Bracket	
6	70434101P	Control Assembly	
7	70324601	Jumper Calibration Wire	
8	70454101P	Control Assembly	H, S and U models; L and P models starting 6/1/15
	70437102P	Control Assembly	B, C and I models; Models through 7/14/14
	70503702P	Control Assembly	B, C and I models; Models starting 7/15/14
	70437103P	Control Assembly	P models through 5/31/15; L models starting 1/29/15 through 5/31/15
	70437104P	Control Assembly	G and K models
	70437105P	Control Assembly	N and Y models; L models through 1/28/15
9	44186101	Output Harness	Use between item 6 and item 8
10	44240301	Control Panel Harness	Goes from item 8 to main harness
11	70364103	Bypass Harness	Non-CE models
12	70441301	Main Harness	Models through 7/8/12
	70467801	Main Harness	Models starting 7/9/12

© Copyright, Alliance Laundry Systems LLC – DO NOT COPY or TRANSMIT

Door Assemblies

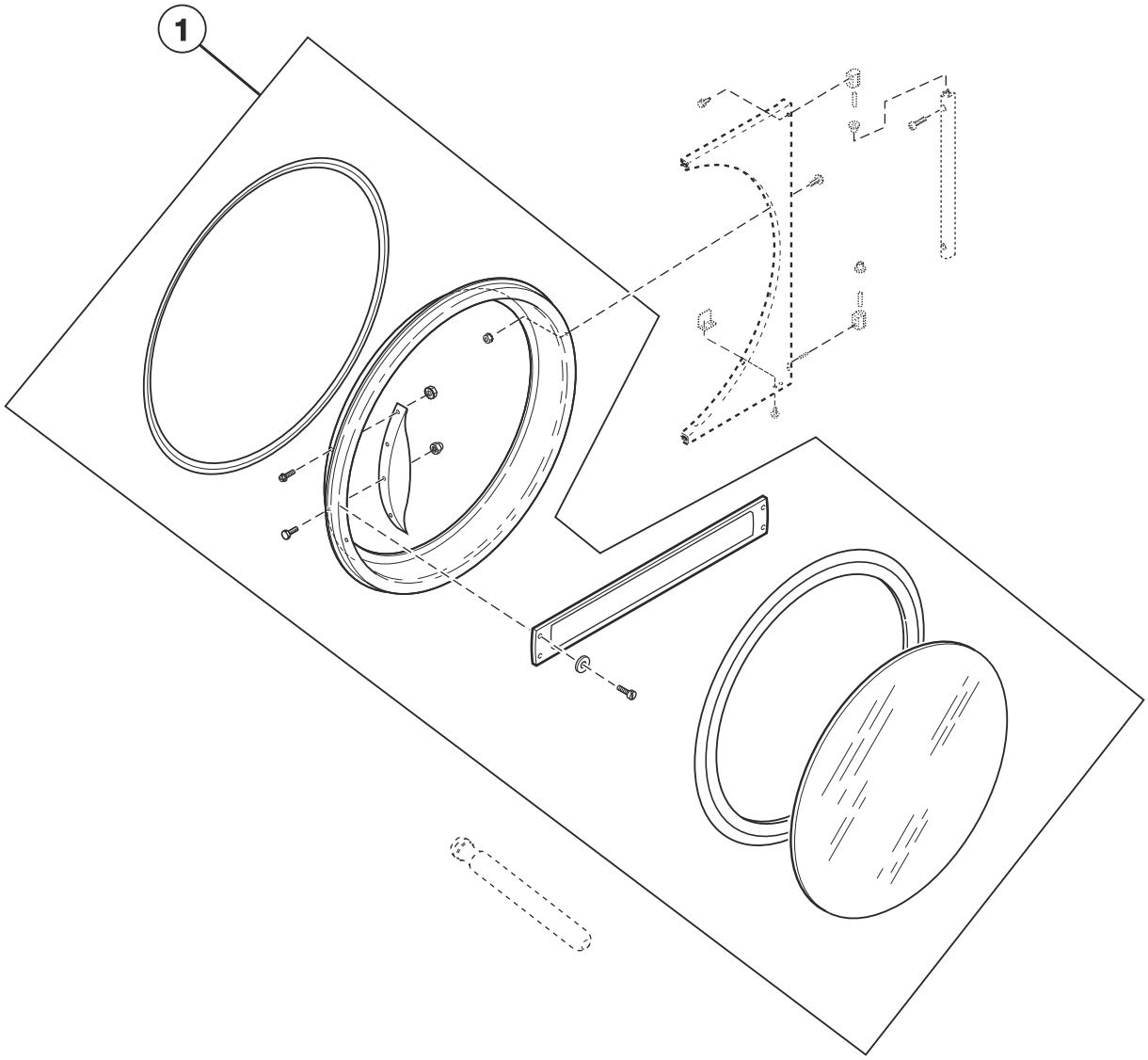

TMB3152P_70501001

© Copyright, Alliance Laundry Systems LLC – DO NOT COPY or TRANSMIT

Door Assemblies

REF	PART NO.	DESCRIPTION	COMMENTS
	M4774P3	Control Panel and Door Hinge Kit	B and I models; To change from old look to new look
	70133501P	Replacement Door Handle Kit	H models
1	44046701	Door Assembly	B, C and I models through 7/31/11; Excludes hinge
	70212300	Door Assembly	M, N and S models; Excludes hinge
	70212301P	Door Assembly	U models through 8/17/14; B, C and I models starting 8/1/11; S models; Black; Excludes hinge
	70496501P	Door Assembly	U models; Models starting 8/18/14
	44058001P	Door Assembly	H models; Excludes hinge
	70496502P	Door Assembly	U models; Chrome option: Excludes hinge
	70212302P	Door Assembly	S models; Chrome option: Excludes hinge
	44058004P	Door Assembly	H models; Chrome option: Excludes hinge
	70064100	Door Assembly	L models through 1/28/15
	70212200	Door Assembly	Y models; P models through 9/30/14; Excludes hinge
	44287801LGP	Door Assembly	P models starting 10/1/14; L models starting 1/29/15; Excludes hinge
	44287801BP	Door Assembly	P models starting 7/5/16; Use with stainless steel front panel; Excludes hinge
	70408901P	Door Assembly	G and K models; Includes handle

© Copyright, Alliance Laundry Systems LLC – DO NOT COPY or TRANSMIT

Door Components

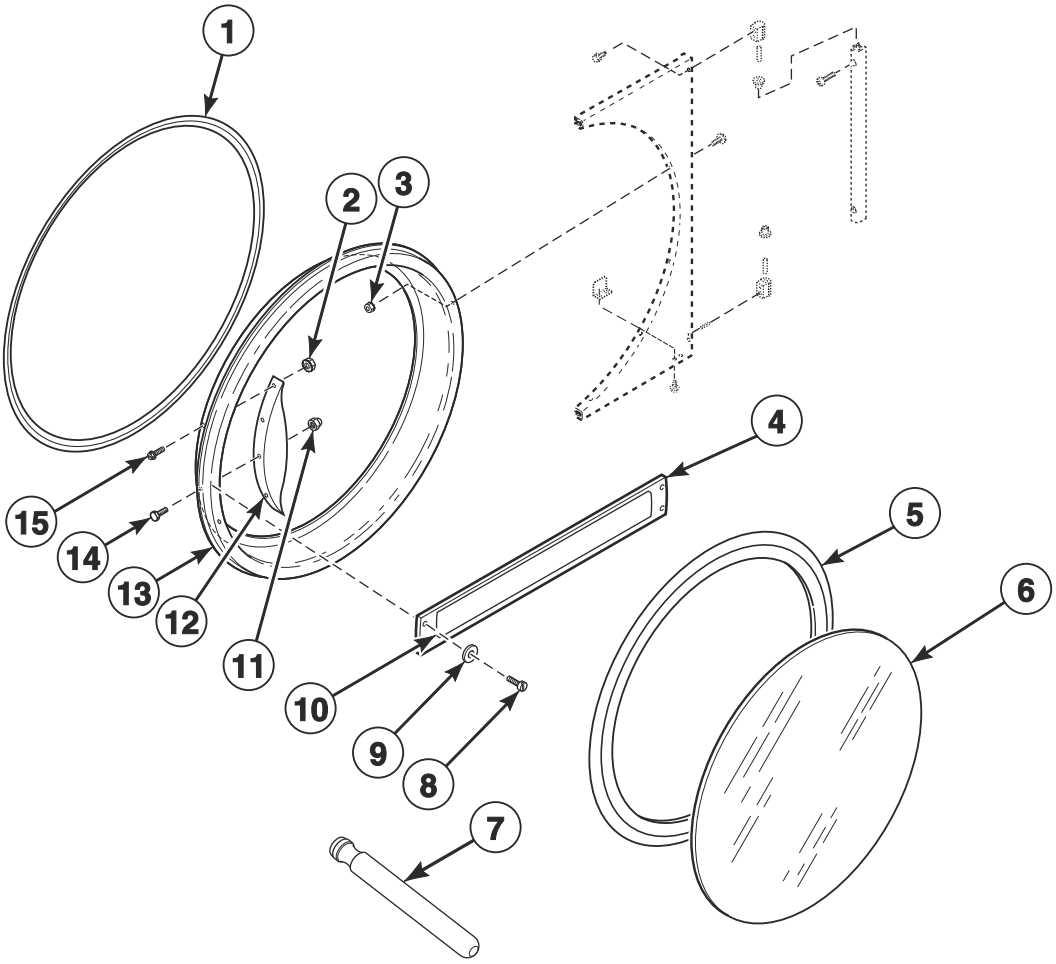

TMB3152PA_70501001

© Copyright, Alliance Laundry Systems LLC – DO NOT COPY or TRANSMIT

Door Components

REF	PART NO.	DESCRIPTION	COMMENTS
	M4774P3	Control Panel and Door Hinge Kit	B and I models; To change from old look to new look
	70133501P	Replacement Door Handle Kit	H models
1	70296801	Door Ring Gasket	
2	44071201	Nut	H, M, N and S models; 4 required
3	70054	Nut	
4	70399502B	Handle Bar	G and K models
5	70211901P	Door Glass Seal Kit	Use Loctite 414 for seal
6	70133601P	Door Glass	H models
	M400784P	Door Glass	All other models
7	M4221P4	Door Glass Installation Tool	
8	70412601	Pop Rivet	G and K models; Attaches door handle to door ring
9	70409301	Washer	G and K models
10	70414001	Label	G models; Coin
	44144401	Nameplate Overlay	K models; Coin
11	M414215	Nut	For door strike; Mounts between door strike screw and door handle
12	44007902P	Door Handle	M, N and S models; U models through 8/17/14; B, C and I models starting 8/17/11
	44263801	Door Handle	U models; Models starting 8/18/14; Use 901620 Screw, 803871 Screw and 44088001 Nut to attach
	44057701	Door Handle	H models
	70538104	Door Handle	H and U models; Models starting 4/1/19
	430117	Door Handle	L models; Models through 1/28/15
	70566701	Door Handle Replacement Kit	L models through 1/28/15; Kit needed only when handle is being mounted on a stamped door ring
	M400133	Door Handle	Y models; P models through 9/30/14
13	44043501	Door Ring and Handle Assembly	B, C and I models through 7/31/11; P models through 9/30/14
	70543907LG	Door Ring and Handle Assembly	P models starting 10/1/14; L models starting 1/29/15; See NOTE
	70543907B	Door Ring and Handle Assembly	P models starting 7/5/16; Use with stainless steel and white front panel
	70505709B	Door Ring Assembly	B, C and I models starting 8/1/11
	70543905	Door Ring Assembly	H and S models; Chrome option
	70505713P	Door Ring Assembly	U models; Chrome option
	70543902	Door Ring Assembly	L models through 1/28/15; U models starting 8/18/14; See NOTE
	70505707B	Door Ring	G and K models
	70543901	Door Ring Assembly	M, N and S models; U models through 8/17/14; Stainless steel; See NOTE
	70538002	Door Assembly	H and U models without stainless steel front panel
	70543904B	Door Ring Assembly	S models without stainless steel front panel
14	M400661	Screw	H, I, M, N, S and U models; Use with 70024801 and 44057701 Door Handle
	M409385	Screw	P and Y models; Use with 70133501P Replacement Door Handle Kit and M400133 Door Handle
	430756	Screw	L models; Use with 430117 Door Handle
15	44024201	Hole Plug	B, C and I models; 4 required
	61199	Screw	

NOTE: Models through Serial No. 1610047745 with a stainless steel front panel - if ordering a new door ring, a new stainless steel front panel must also be ordered.

© Copyright, Alliance Laundry Systems LLC – DO NOT COPY or TRANSMIT

Hinge Components

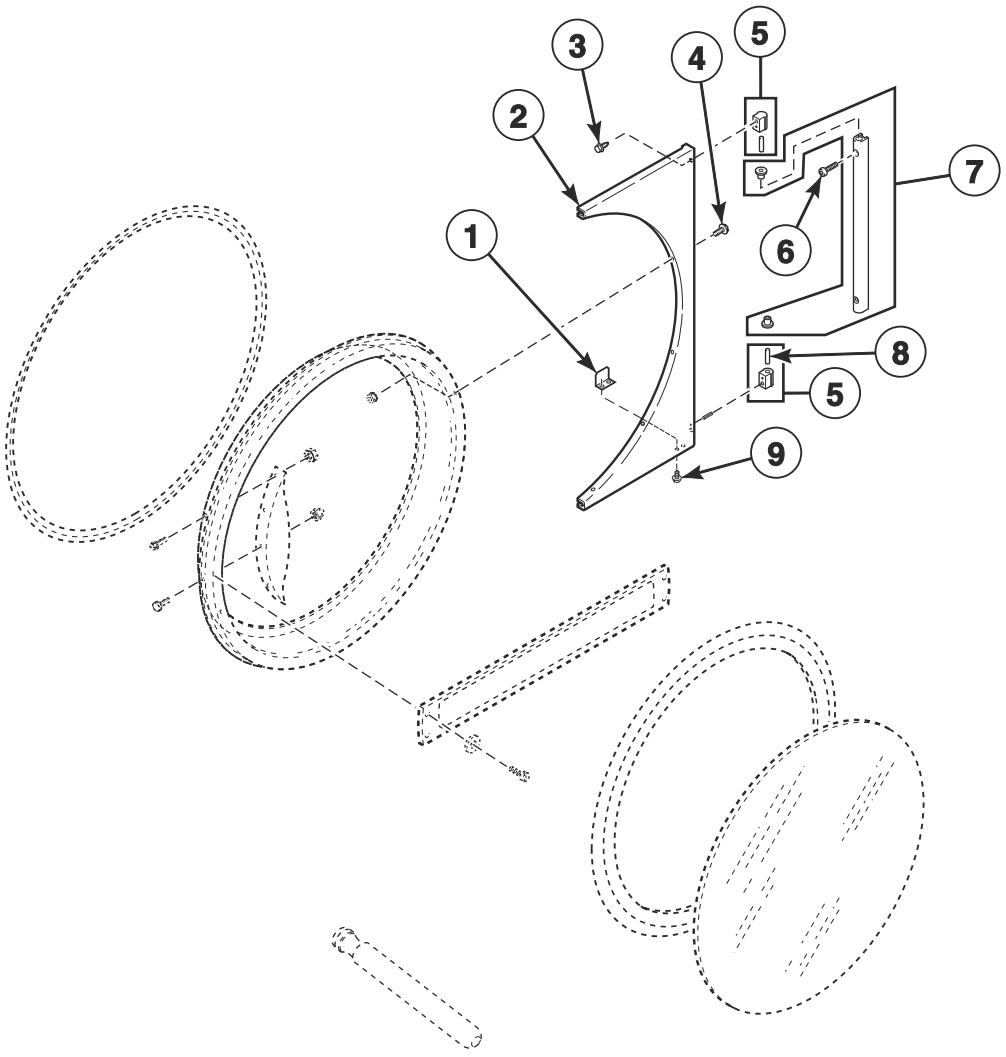

TMB3152PB_70409401

© Copyright, Alliance Laundry Systems LLC – DO NOT COPY or TRANSMIT

Hinge Components

REF	PART NO.	DESCRIPTION	COMMENTS
	M4774P3	Control Panel and Door Hinge Kit	B and I models; To change from old look to new look
1	70215001P	Door Switch Actuator Kit	
2	70116003*	Door Hinge	H, M, N, S, U and Y models; C models starting 8/1/11; P models through 9/30/14; L models through 1/28/15
	70116006	Door Hinge	C, H, L, M, P, S, U and Y models through 3/31/15; B and I models through 7/31/11; Stainless steel
	70116006	Door Hinge	H, L, M, S, U and Y; Models starting 4/1/15; Stainless steel
	70116005LG	Door Hinge	P models starting 10/1/14; U models; L models starting 1/29/15; Light gray
	70116005B	Door Hinge	Black; G and K models; B and I models starting 8/1/11; P models starting 7/1/17 with white front panel and starting 7/5/16 with stainless steel front panel
3	70442101	Screw	
4	44349101	Screw	
5	M4772P3	Hinge Cam Kit	C, H, L, M, N, P, S, U and Y models; B and I models through 7/31/11
	M4773P3	Hinge Cam Kit	Black; G and K models; B and I models starting 8/1/11; P models starting 7/1/17 with white front panel and starting 7/5/16 with stainless steel front panel
6	70033502	Screw	C, H, L, M, N, P, S, U and Y models; B and I models through 7/31/11
	70407301	Screw	Black; G and K models; B and I models starting 8/1/11; P models starting 7/1/17 with white front panel and starting 7/5/16 with stainless steel front panel
7	44035001	Door Hinge Lug Assembly	C, H, L, M, N, P, S, U and Y models; B and I models through 7/31/11
	44035002	Door Hinge Lug Assembly	Black; G and K models; B and I models starting 8/1/11; P models starting 7/1/17 with white front panel and starting 7/5/16 with stainless steel front panel
8	70071401	Pin	
9	70058501	Pop Rivet	

*** Add Letter To Designate Color. L - Almond Q - Bisque W - White**

© Copyright, Alliance Laundry Systems LLC – DO NOT COPY or TRANSMIT

Control Panel

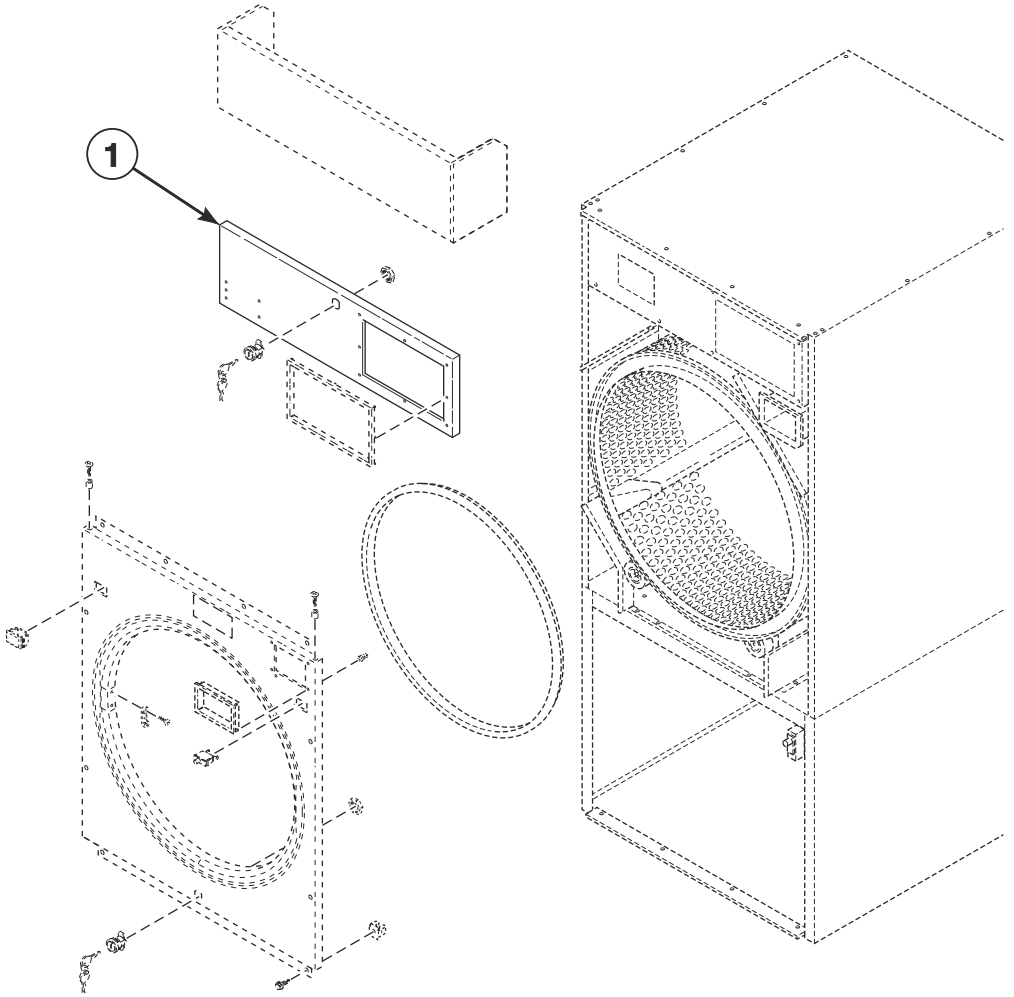

TMB3315P_70501001

© Copyright, Alliance Laundry Systems LLC – DO NOT COPY or TRANSMIT

Control Panel

REF	PART NO.	DESCRIPTION	COMMENTS
	M4774P3	Control Panel and Door Hinge Kit	B and I models; To change from old look to new look
1	70273301*	Control Panel	B, C and I models through 7/31/11; Manual
	70273302	Control Panel	C models; B and I models through 7/31/11; Manual; Stainless steel
	70273303*	Control Panel	C models; B and I models through 7/31/11; Electronic
	70273304	Control Panel	C models; B and I models through 7/31/11; Electronic; Stainless steel
	70273307B	Control Panel	B and I models starting 8/1/11 through 7/8/12
	70273308B	Control Panel	B and I models starting 7/9/12
	70273315W	Control Panel	U models starting 8/18/14; G and K models
	70273306	Control Panel	G and K models through 3/31/15; Stainless steel
	70273313	Control Panel	G and K models starting 4/1/15; Stainless steel
	70121501*	Control Panel	M, S and Y models; P models through 9/30/14; U models through 8/17/14; P models starting 7/1/17 with white front panel
	70121502	Control Panel	M, S and Y models through 3/31/15; P models through 9/30/14; U models through 8/17/14; Stainless steel
	70121508	Control Panel	M, P, S and Y models starting 4/1/15; Stainless steel
	70273315LG	Control Panel	Light gray; U models
	70273313	Control Panel	U models; Stainless steel
	70121507DG	Control Panel	P models starting 10/1/14; L models starting 1/29/15; Dark gray
	70121505*	Control Panel	H and N models
	70121509	Control Panel	H models; Stainless steel
	70121501B	Control Panel	L models through 1/28/15

*** Add Letter To Designate Color. L - Almond Q - Bisque W - White**

© Copyright, Alliance Laundry Systems LLC – DO NOT COPY or TRANSMIT

Front Panel Assemblies

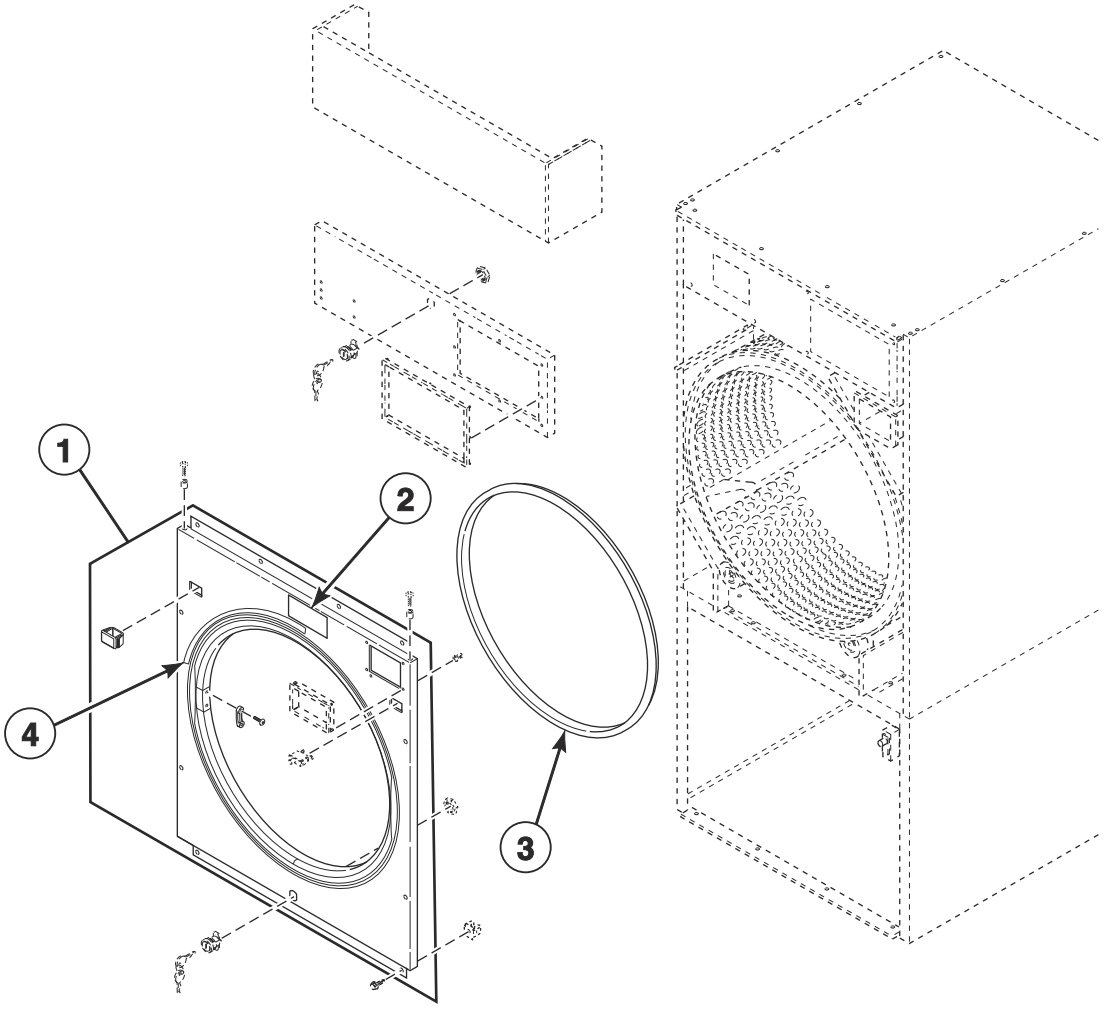

TMB3315PA_70501001

© Copyright, Alliance Laundry Systems LLC – DO NOT COPY or TRANSMIT

Front Panel Assemblies

REF	PART NO.	DESCRIPTION	COMMENTS
1	44115401*P	Front Panel Assembly	B, C, H, I, M, N and S models; P models through 9/30/14 and starting again 7/1/17; L models through 1/28/15; ** control suffixes
	44115502	Front Panel Assembly	B, C, H, I, M and S models; P models through 9/30/14; L models through 1/28/15; ** control suffixes; Stainless steel
	44115601*	Front Panel Assembly	H, M, N and S models; P models through 9/30/14 and starting again 7/1/17; L models through 1/28/15; BK, BL, BY, LY, NR and ZR control suffixes
	44115702	Front Panel Assembly	H, M, P and S models; P models through 9/30/14; L models through 1/28/15; BK, BL, BY, LY, NR and ZR control suffixes; Stainless steel
	70602202W	Front Panel Assembly	Non-CE B, C, H, I, N, S and Y models; Non-CE U models through 8/17/14; Non-CE P models starting 7/1/17; OPL
	70329715LG	Front Panel	Non-CE U models; OPL; Light gray
	44115901	Front Panel Assembly	Non-CE B, C, H, I, S, U and Y models through 3/31/15; OPL; Stainless steel
	44115902	Front Panel Assembly	Non-CE B, H, I, P, S, U and Y models starting 4/1/15; OPL; Stainless steel
	44116001*	Front Panel Assembly	CE B, C, H, N, S, U and Y models; OPL
	70329716LG	Front Panel	CE U models; OPL; Light gray
	44116102	Front Panel Assembly	CE B, C, H, P, S and Y models; CE U models through 8/17/14; OPL; Stainless steel
	44116201*P	Front Panel Assembly	B, C, H, I, M, N and S models; P models through 9/30/14; L models through 1/28/15; ** control suffixes; Hinged lint drawer
	44116301	Front Panel Assembly	B, C, H, I, M and S models through 3/31/15; P models through 9/30/14; L models through 1/28/15; ** control suffixes; Stainless steel; Hinged lint drawer
	44116302	Front Panel Assembly	B, H, I, M, P and S models starting 4/1/15; ** control suffixes; Stainless steel
	70329717DG	Front Panel	P models starting 10/1/14; L models starting 1/29/15; Coin; Dark gray
	70576001DG	Front Panel	P models starting 10/1/14; L models starting 1/29/15; Coin; No lock; Dark gray
	70329718DG	Front Panel	P models starting 10/1/14; L models starting 1/29/15; Card and central pay; Dark gray
	70329715DG	Front Panel	Non-CE P models starting 10/1/14; Non-CE L models starting 1/29/15; OPL; Dark gray
	70329716DG	Front Panel	CE P models starting 10/1/14; CE L models starting 1/29/15; OPL; Dark gray
2	70537001	Label	B, C, H, I, M, S and U models; C.A.R.E.
	44190901	Label	L and P models; Safe Tech
	70537101	Label	G and K models; F.S.S.
3	70173401P	Front Panel Seal	
4	70534301	Warning Label	

*** Add Letter To Designate Color. L - Almond Q - Bisque W - White**

**** NOTE: 3B, 3K, 3L, 3V, 3W, 3X, BB, BC, BW, BX, DV, DX, LC, LK, LL, LX, NC, NX, SD, SX, ZC and ZX**

© Copyright, Alliance Laundry Systems LLC – DO NOT COPY or TRANSMIT

False Fronts

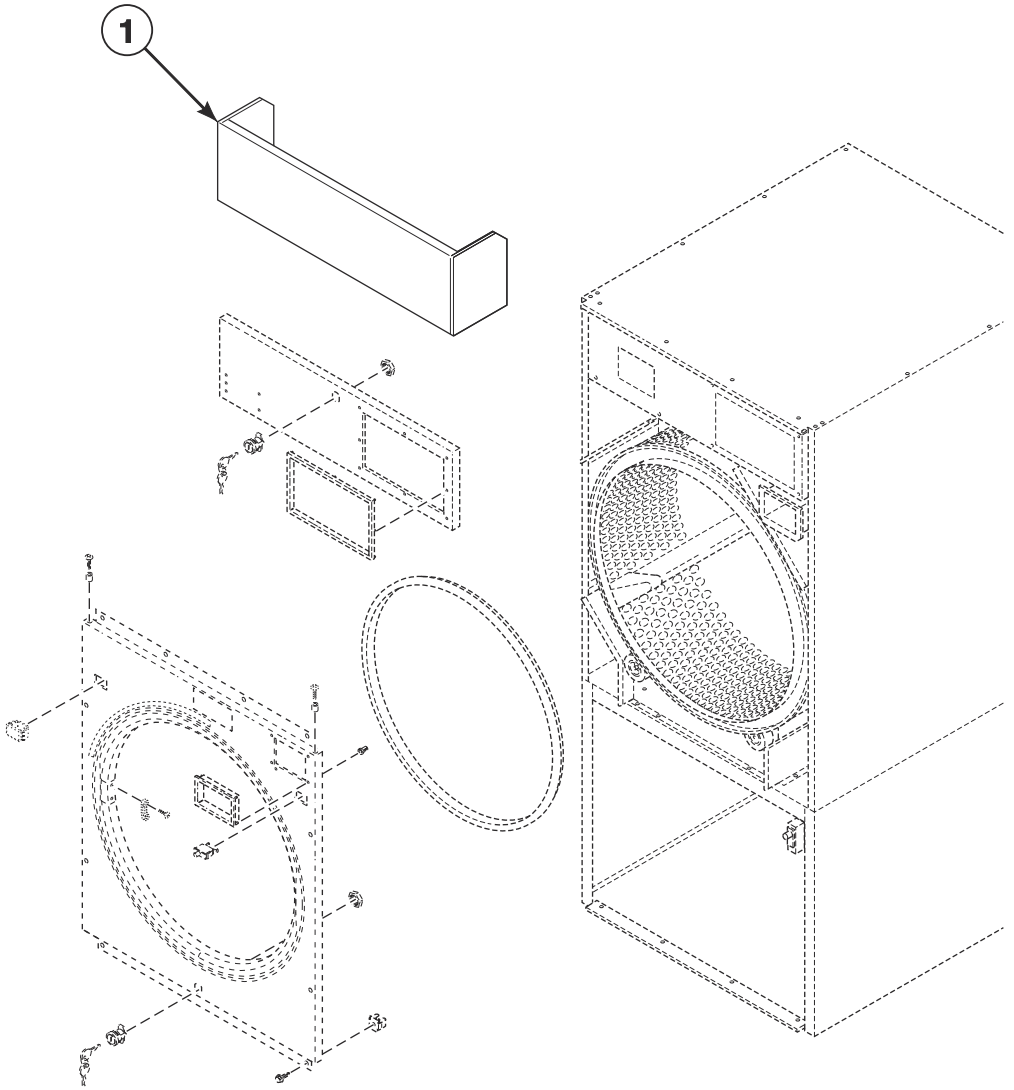

TMB3315PB_70501001

© Copyright, Alliance Laundry Systems LLC – DO NOT COPY or TRANSMIT

False Fronts

REF	PART NO.	DESCRIPTION	COMMENTS
1	70000503DG	False Front	P models; Models starting 10/1/14; 72 inches; Dark gray
	70000503LG	False Front	U models; 72 inches; Light gray
	70000501*P	False Front	P models through 9/30/14; All other models except B, I and P models; 72 inches
	70000502	False Front	P models through 9/30/14; All other models through 3/31/15; 72 inches; Stainless steel
	70000504	False Front	Models starting 4/1/15; 72 inches; Stainless steel
	70024203DG	False Front	P models; Models starting 10/1/14; 76 inches; Dark gray
	70024203LG	False Front	U models; 76 inches; Light gray
	70024201*P	False Front Assembly	P models through 9/30/14; All other models except B, I and P models; 76 inches
	70024202P	False Front	P models through 9/30/14; All other models through 3/31/15; 76 inches; Stainless steel
	70024204	False Front	Models starting 4/1/15; 76 inches; Stainless steel

*** Add Letter To Designate Color. L - Almond Q - Bisque W - White**

© Copyright, Alliance Laundry Systems LLC – DO NOT COPY or TRANSMIT

Cabinet Front Components

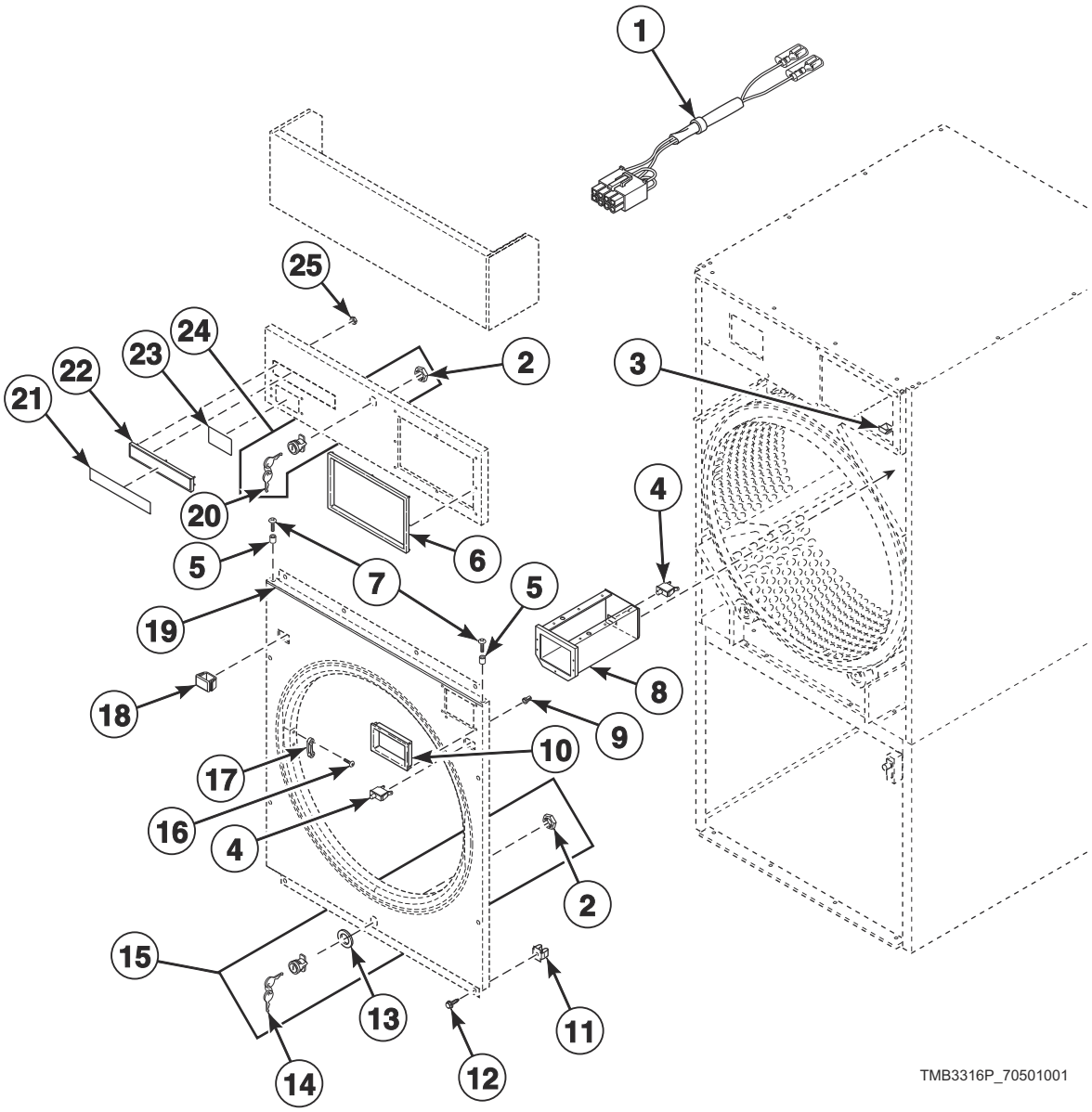

© Copyright, Alliance Laundry Systems LLC – DO NOT COPY or TRANSMIT

Cabinet Front Components

REF	PART NO.	DESCRIPTION	COMMENTS
1	70364104P	Coin Vault Switch Harness	
2	44088801	Nut	
3	70296401	Coin Chute Assembly	
4	70413301	Pushbutton Switch	
5	56079	Panel Locator	9 required
6	70529402	Control Trim	H models; Light gray (tan)
	70529401	Control Trim	H models; Gray
	44016401	Control Trim	K, L, M, N, P, S and Y models; U models through 8/17/14; Black
7	39733	Screw	
8	70180101	Coin Vault Assembly	
	F160673P	Coin Box	Optional equipment; Includes lock and key
9	M400972	Shadow Box Clip	
10	70117502	Coin Vault Trim	Black
	70117501	Coin Vault Trim	Light gray (tan)
	70117504	Coin Vault Trim	Gray
11	70030501	Expansion Clip	8 required; Use with item 7, between front panel and cabinet
12	430497	Screw	
13	70342401	Lock Shim	
14	70155602	Key	RL002
15	70722301	Lock, Key and Nut Kit	RL002
16	44166601	Pop Rivet	
17	M401223	Door Latch	
18	44057801W	Switch Hole Plug	White
	44057801Q	Switch Hole Plug	Bisque
	44057801LG	Switch Hole Plug	U models starting 8/18/14; L and P models starting 10/24/14; Gray
19	70399407	Access Panel Trim	G and K models
20	70155601	Key	RL001
21	70115601	Nameplate Overlay	S models
	70460801	Nameplate Overlay	U models; Models through 8/17/14
	F8443102	Nameplate	U models; Models starting 8/18/14
	44046801	Nameplate	B and I models; Models through 7/9/12
	B12389801	Nameplate	B and I models; Models starting 7/10/12
	44062901	Nameplate	C models
	70411401	Nameplate Overlay	G models; Coin
	70410201	Nameplate Overlay	G models; OPL
	44144401	Nameplate Overlay	K models; Coin
	70243901	Nameplate	L models; Models through 3/27/15
	70522001	Nameplate	L models; Models starting 3/28/15
	70380701	Nameplate Overlay	P models; Models through 9/30/14
	70509601	Nameplate	P models; Models starting 10/1/14
	44104501	Nameplate Overlay	Y models
22	70117401	Nameplate Bezel	L, P and S models
23	44129902	Nameplate	C models
24	70733701	Lock, Key and Nut Kit	RL001
25	M400977	Nut	P and S models 6 required; U models starting 8/18/14 5 required

© Copyright, Alliance Laundry Systems LLC – DO NOT COPY or TRANSMIT

Emergency Stop Button for CE Models

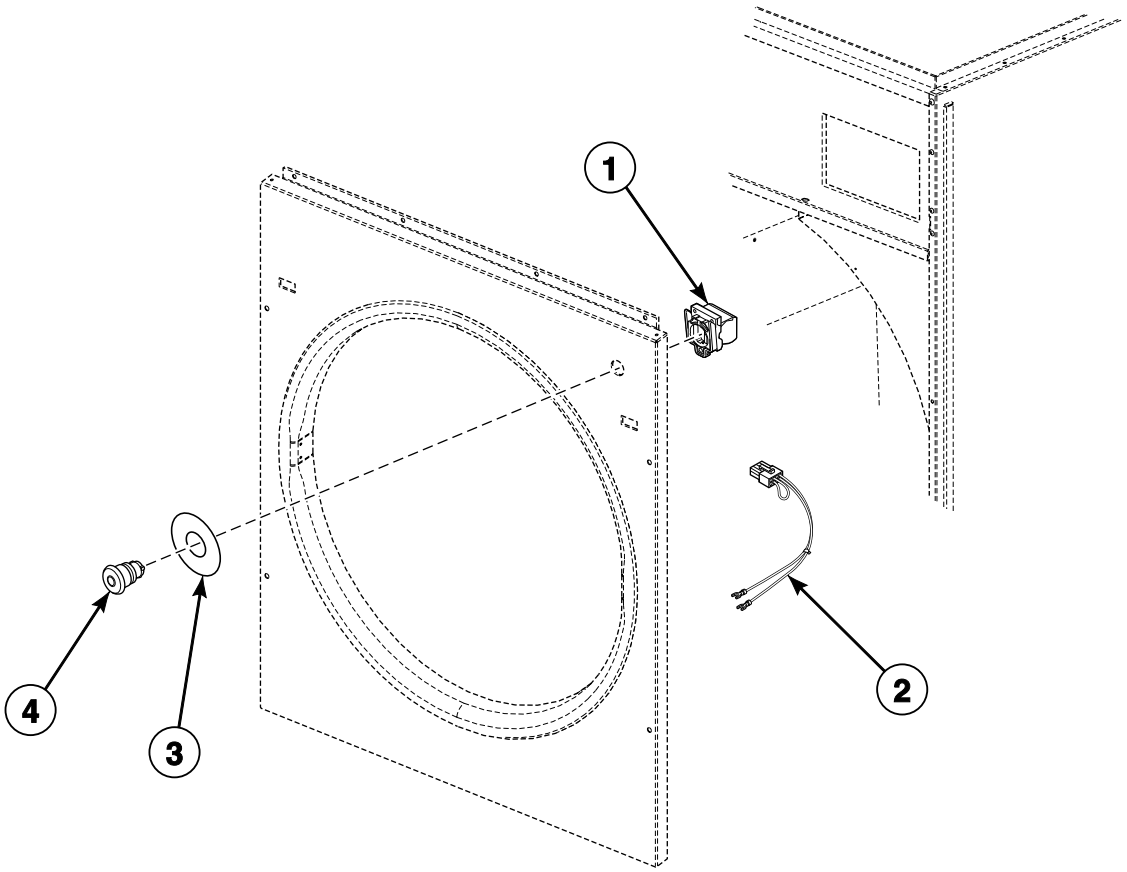

TMB2375P_70501001

© Copyright, Alliance Laundry Systems LLC – DO NOT COPY or TRANSMIT

Emergency Stop Button for CE Models

REF	PART NO.	DESCRIPTION	COMMENTS
1	44018701	Contact Block	Includes base; Models through 9/30/07
	F200233401P	Contact Block Switch	Models starting 10/1/07 through 8/17/14; Includes mounting base
	F8069501	Contact Switch	Models starting 8/18/14
	F8538101	Contact Base	Models starting 8/18/14
2	70364105P	Emergency Stop Contact Harness	1 contact
	70364106P	Emergency Stop Harness	2 contacts
3	44012901	Emergency Stop Label	
4	44018801	Pushbutton	Models through 9/30/07
	F200233500	Emergency Stop Pushbutton	Models starting 10/1/07

© Copyright, Alliance Laundry Systems LLC – DO NOT COPY or TRANSMIT

Lower Cabinet Components

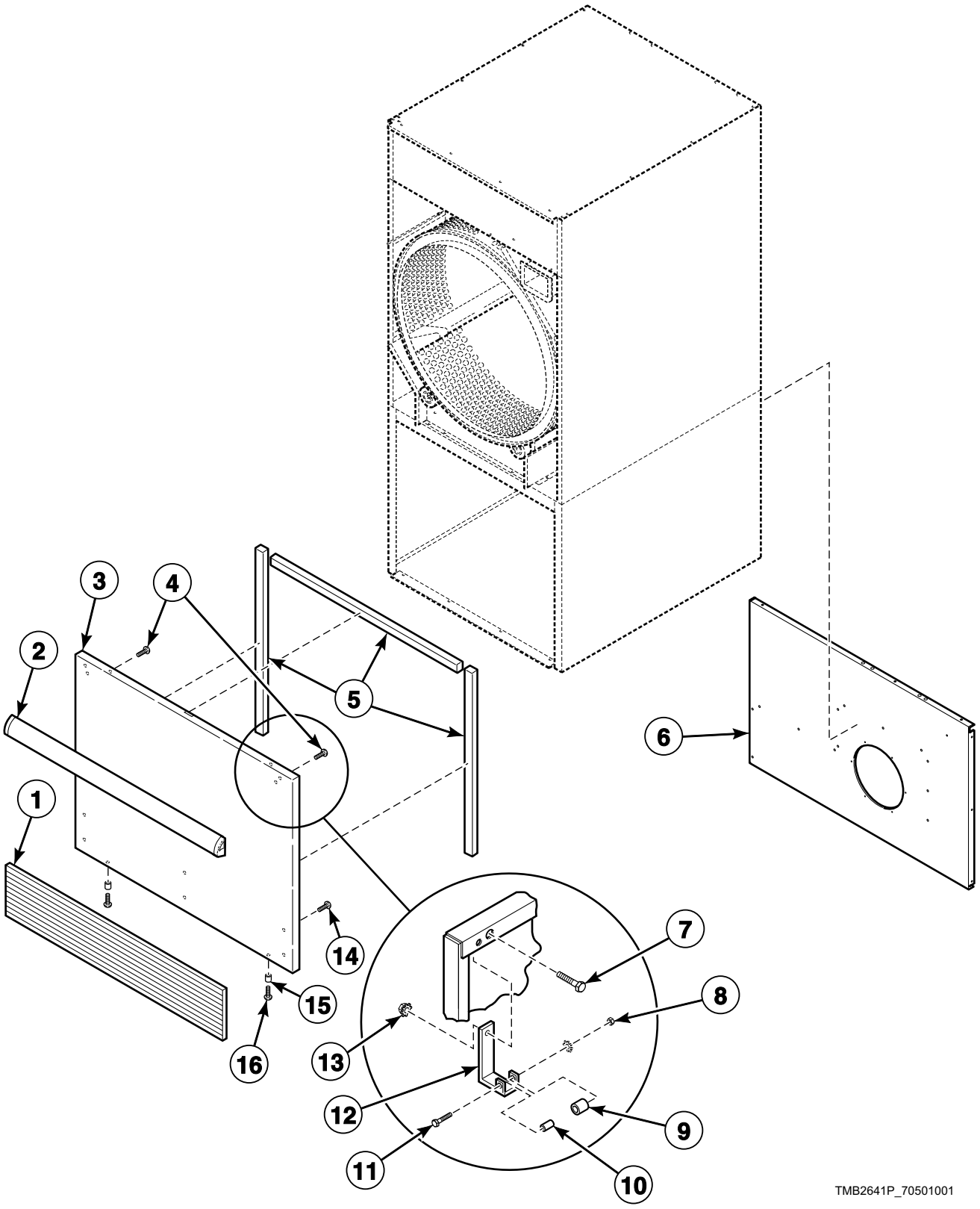

© Copyright, Alliance Laundry Systems LLC – DO NOT COPY or TRANSMIT

Lower Cabinet Components

REF	PART NO.	DESCRIPTION	COMMENTS
1	70117602	Kickplate	H and U models; Dark gray
	70117601	Kickplate	All models except H models; Black
2	70154401	Handle and Caps Assembly	B, C, I, M, N, S and U models; P models through 9/30/14; P models starting 7/1/17 with white front panel and starting 7/5/16 with stainless steel front panel; Black
	70407207	Handle Bumper	P models; Models starting 10/1/14
	70154402	Handle and Caps Assembly	H and U models; Dark gray
	70407205	Handle Bumper	G and K models
3	70176601*P	Lint Panel Assembly	B, C, G, I, K, M, N, S, U and Y models; P models through 9/30/14 and starting again 7/1/17; L models through 1/28/15; Coin; Includes items 2, 9 and 11
	70176602P	Lint Panel Assembly	B, C, G, I, K, M, S, U and Y models through 3/31/15; P models through 9/30/14; L models through 1/28/15; Coin; Stainless steel
	70515402	Lint Panel	B, G, H, I, K, M, S, U and Y models; Models starting 4/1/15; Stainless steel
	70515403W	Lint Panel	B, C, G, I, K, M, N, S and Y models; P models through 9/30/14; U models through 8/17/14; L models through 1/28/15; OPL
	70515403LG	Lint Panel	U models; Light gray
	70176604	Lint Panel Assembly	B, C, G, I, K, M, S, U and Y models through 3/31/15; P models through 9/30/14; L models through 1/28/15; OPL; Stainless steel
	70515404DG	Lint Panel	P models starting 10/1/14; L models starting 1/29/15; Dark gray; No kickplate
	70515405	Lint Panel	L and P models; B, G, H, K, S and U models starting 4/1/19; Stainless steel; No kickplate
	70515406W	Lint Panel	B, G, H, K, S and U models starting 4/1/19; No kickplate
	70515404	Lint Panel	U models starting 4/1/19; Light gray; No kickplate
	70176605*	Lint Panel Assembly	H models; Coin; Includes items 2, 9 and 11
	70176606	Lint Panel Assembly	H models through 3/31/15; Coin; Stainless steel
	70176607*	Lint Panel Assembly	G models; Coin
	70176608	Lint Panel Assembly	G models; Coin; Stainless steel
	70176609*	Lint Panel Assembly	H models; OPL
	70176610	Lint Panel Assembly	H models through 3/31/15; OPL; Stainless steel
	70176611*	Lint Panel Assembly	G models; OPL
	70176612	Lint Panel Assembly	G models; OPL; Stainless steel
4	430757	Screw	For attaching handle; 6 required
5	70289101P	Gasket	Sold per foot
6	70320001	Rear Lint Panel	
7	70132301	Screw	Attaching roller catch
8	23951	Nut	
9	70297601	Roller Catch Wheel	
10	70030201	Roller Catch Spacer	
11	70072801	Screw	
12	70030301	Roller Catch Arm	
13	51236	Nut	Attaching roller catch
14	70126301	Pop Rivet	For attaching kickplate; Black; 6 required
	70126401	Pop Rivet	For attaching kickplate; Gray; 6 required
15	56079	Panel Locator	
16	39733	Screw	

*** Add Letter To Designate Color. L - Almond Q - Bisque W - White**

© Copyright, Alliance Laundry Systems LLC – DO NOT COPY or TRANSMIT

Cylinder and Trunnion Assembly

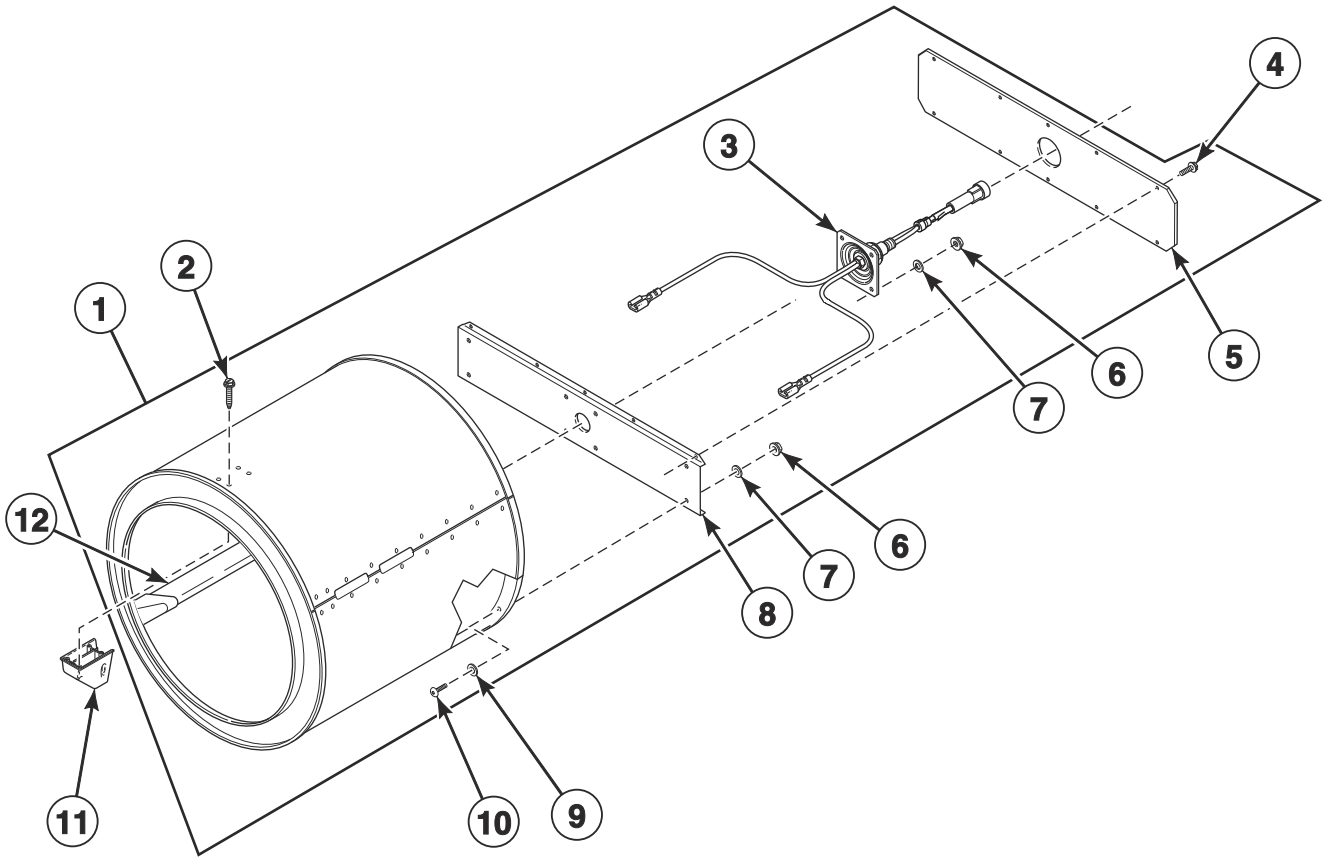

TMB3358P_70501001

© Copyright, Alliance Laundry Systems LLC – DO NOT COPY or TRANSMIT

Cylinder and Trunnion Assembly

REF	PART NO.	DESCRIPTION	COMMENTS
	70343101P	Drywall Screw Magnet Kit	
1	70372703	Cylinder Assembly	G and K models; Non-moisture sensing
	70443803	Cylinder and Trunnion Assembly	G and K models; Moisture sensing
	70372701P	Cylinder Assembly	All other models; Galvanized; Non-moisture sensing
	70443801	Cylinder and Trunnion Assembly	All other models; Galvanized; Moisture sensing
	70372702P	Cylinder Assembly	All other models; Stainless steel; Non-moisture sensing
	70443802	Cylinder and Trunnion Assembly	All other models; Stainless steel; Moisture sensing
2	62588	Screw	12 required
3	70564801	Trunnion and Seal Kit	Includes 70013702 Rear Cylinder Seal; Non-moisture sensing
	70564802	Trunnion and Seal Kit	Moisture sensing; Includes 70454601 Trunnion and Wire Assembly
4	430497	Screw	10 required
5	70257401	Rear Cylinder Channel Plate	
6	44087201	Nut	8 required
7	M400080	Washer	4 required; Models through Serial No. 0708006765
	70411301	Washer	Models starting Serial No. 0708006766
8	70257301	Rear Cylinder Channel	Non-moisture sensing
	70257302	Rear Cylinder Channel	Moisture sensing
9	70411301	Washer	Models starting Serial No. 0708006766
10	70391101	Screw	8 required
11	70070101	End Cap	Non-moisture sensing
	70070102	End Cap	Moisture sensing
12	70433001	Cylinder Rib Assembly	Moisture sensing

© Copyright, Alliance Laundry Systems LLC – DO NOT COPY or TRANSMIT

Cylinder Components

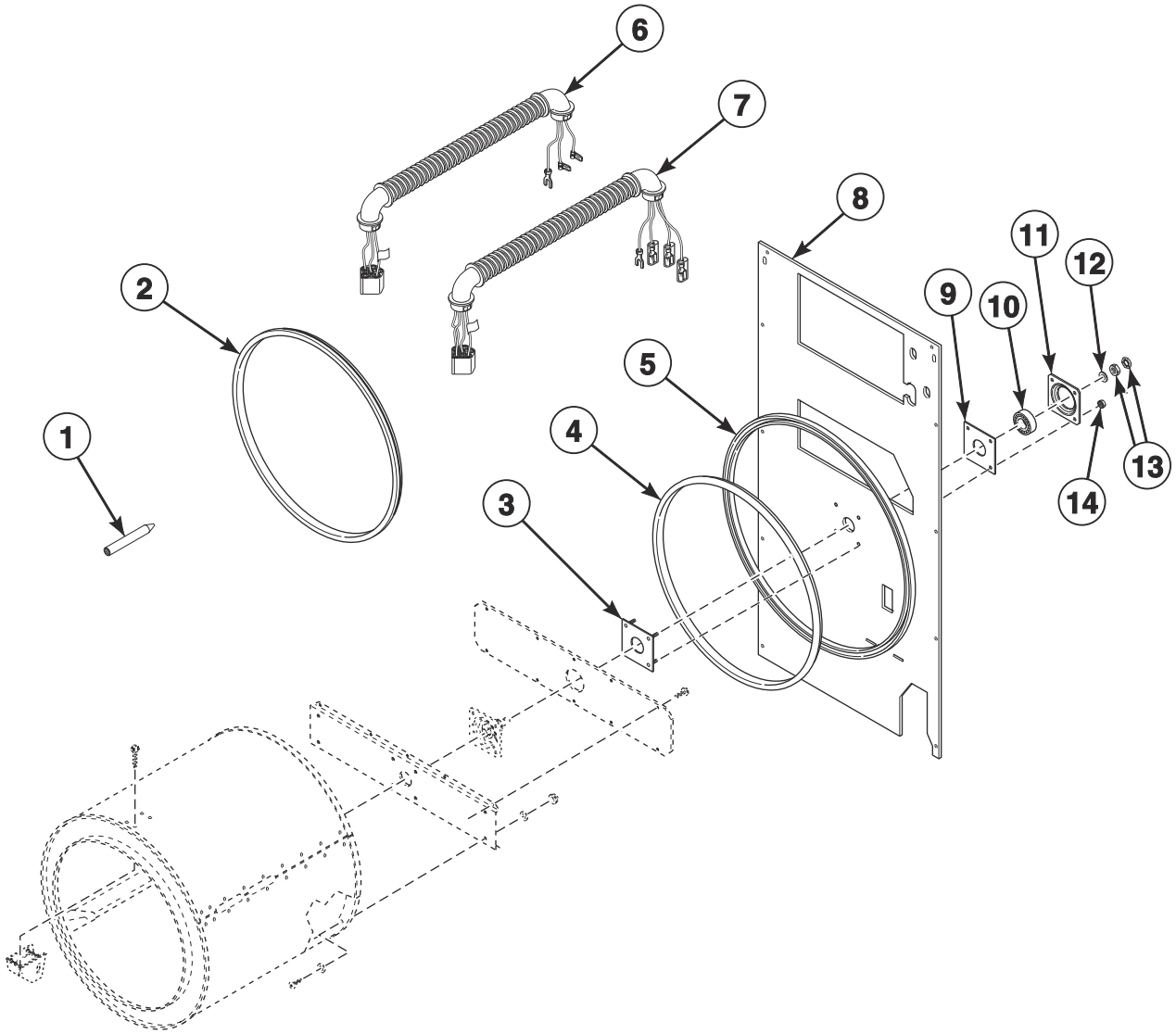

TMB2908PA

© Copyright, Alliance Laundry Systems LLC – DO NOT COPY or TRANSMIT

Cylinder Components

REF	PART NO.	DESCRIPTION	COMMENTS
	70343101P	Drywall Screw Magnet Kit	
	430260P	Support Housing Bearing Assembly	Includes items 10, 11 and Loctite
1	263P4	Cylinder Guide Tool	
2	70066004	Center Cylinder Seal	
3	430352	Cylinder Bearing Stud Plate Assembly	
4	70013702	Rear Cylinder Seal	Use with 511637 Adhesive
5	70506401	Rear Cylinder Seal Support	
6	70401001	Cylinder Motor Harness Assembly	Models through 2/28/10; 1 Phase; 3 Phase electric models with 240 Volt and below
	70439701	Cylinder Motor Harness Assembly	Models starting 3/1/10; 1 Phase; 3 Phase electric models with 240 Volt and below
7	70401101	Cylinder Motor Harness Assembly	Models through 2/28/10; 3 Phase except electric models with 240 Volt and below
	70440101	Cylinder Motor Harness Assembly	Models starting 3/1/10; 3 Phase except electric models with 240 Volt and below
	70465801	Cylinder Motor Harness Assembly	Reversing models
8	70356701	Upper Rear Panel	Gas models; Nonreversing
	70356703	Upper Rear Panel	Gas models; Reversing
	70356702	Upper Rear Panel	Electric and steam models; Nonreversing
	70356704	Upper Rear Panel	Electric and steam models; Reversing
9	70355001	Rear Bearing Shim	
10	70448701	Support Bearing	
11	70013901	Rear Cylinder Bearing Housing	
12	M400991	Washer	
13	M400022	Nut	
14	M412986	Nut	4 required

© Copyright, Alliance Laundry Systems LLC – DO NOT COPY or TRANSMIT

Cabinet Components

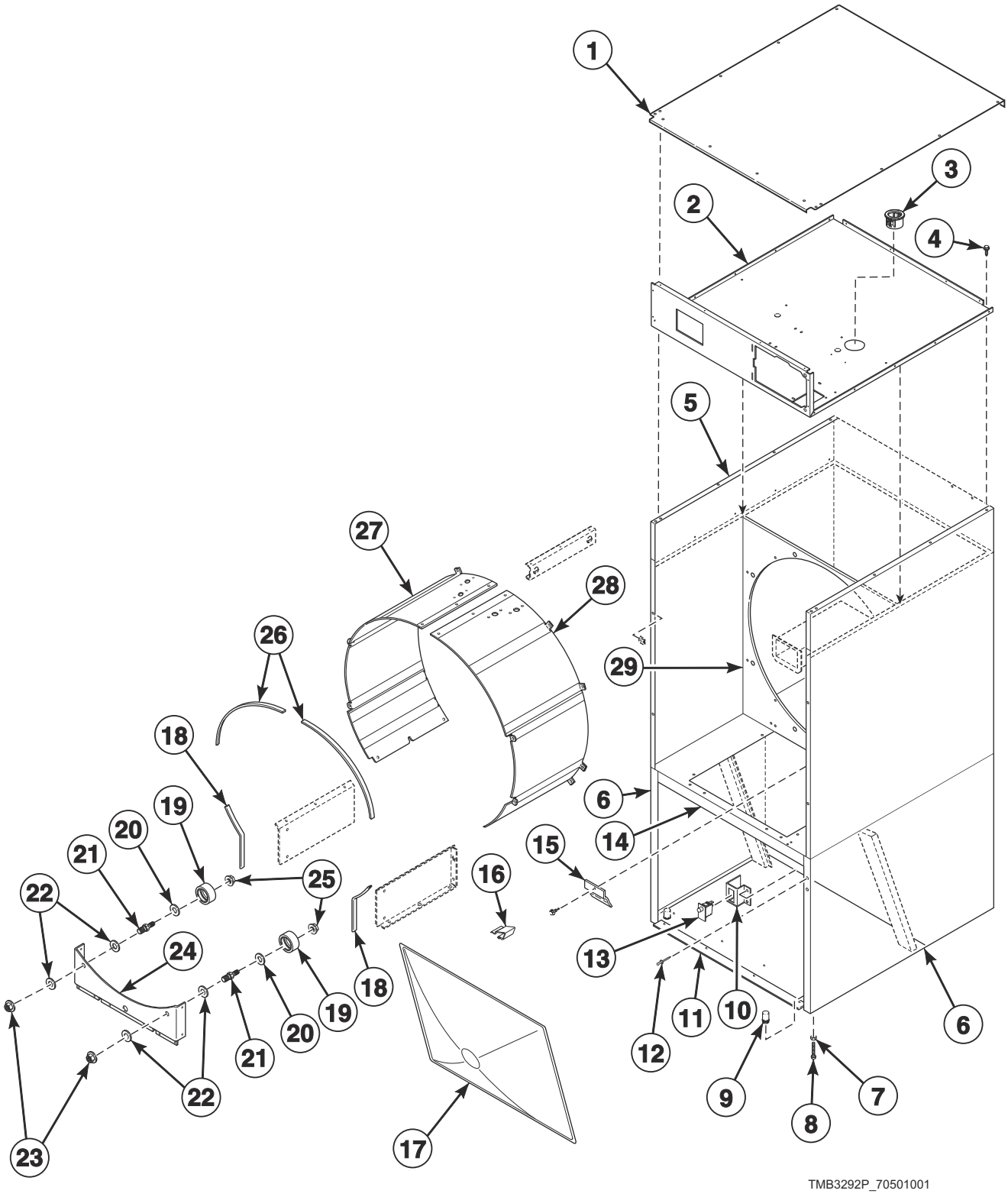

© Copyright, Alliance Laundry Systems LLC – DO NOT COPY or TRANSMIT

Cabinet Components

REF	PART NO.	DESCRIPTION	COMMENTS
	M4379P4	Tumbler Dolly Kit	
	205655	Leveling Leg Locknut Wrench	Use with item 7
	298P4P	Spray Paint	White
	297P4	Spray Paint	Almond
	381P4	Spray Paint	Bisque
	382P4	Spray Paint	Cream
	286P4	Spray Paint	Blue
	122P4P	Porcelain Touch-Up Paint	White
	215P4P	Porcelain Touch-Up Paint	Almond
	370P4P	Porcelain Touch-Up Paint	Bisque
1	70557601	Flat Top	
2	70555301	Top Pan	
3	70346501	Bushing	
4	430497	Screw	
5	70021504DG	Side Panel	P models; Models starting 10/1/14; Upper; Dark gray
	70021502LG	Side Panel	U models; Upper; Light gray
	70021502*P	Side Panel	P models through 9/30/14; All other models; Upper
6	70253801DG	Side Panel	P models; Models starting 10/1/14; Lower; Dark gray
	70253801LG	Side Panel	U models; Lower; Light gray
	70253801*P	Side Panel	P models through 9/30/14; All other models; Lower
7	21899	Nut	
8	34319	Leveling Leg	
9	70063201	Hole Plug	
10	70277301	Lint Panel Switch Bracket	
11	70332401P	Lower Pan	
12	70058501	Pop Rivet	16 required; Upper side panel
13	70413401	Switch Assembly	
14	N/A	Center Pan	
15	70054501	Lint Screen Clip	
16	35865	Hold-Down Clip	
17	70325601	Lint Screen	
18	70015709	Sheet Metal Edge Gasket	Lower
19	70616701	Roller and Seal Kit	
20	70443601	Roller Seal	Models starting 3/1/10
21	70249501	Roller Shaft	
22	70261401	Washer	
23	M404993	Nut	
24	70328301	Roller Support Bracket	
25	430576	Nut	
26	70015710	Sheet Metal Edge Gasket	Upper
27	70427302	Cylinder Shroud	Left
28	70427301	Cylinder Shroud	Right
29	70252601	Center Partition	

*** Add Letter To Designate Color. L - Almond Q - Bisque W - White**

N/A = Part no longer available

© Copyright, Alliance Laundry Systems LLC – DO NOT COPY or TRANSMIT

Fire Suppression System Components

All Gas and Steam Models Except N and Y Models

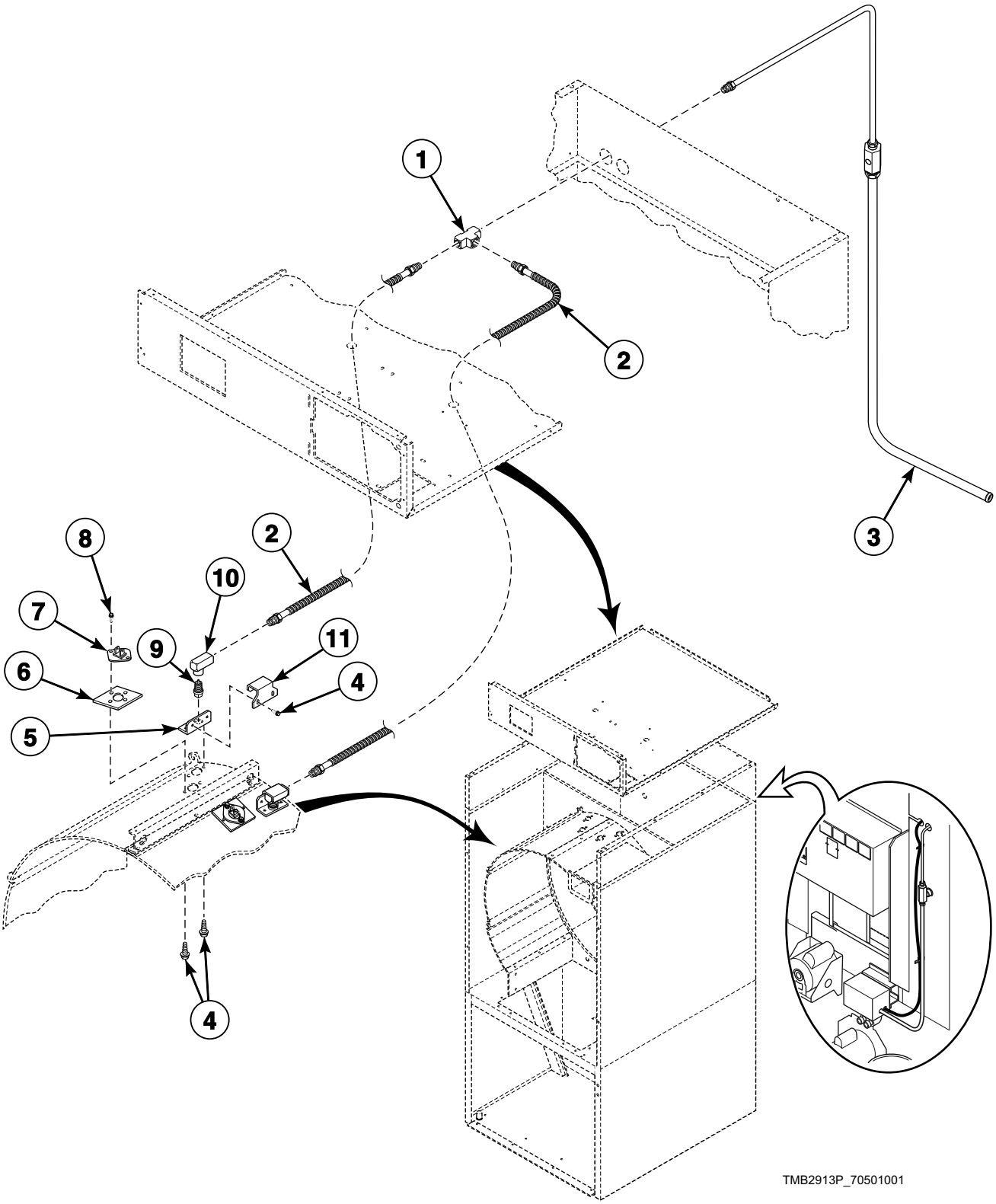

© Copyright, Alliance Laundry Systems LLC – DO NOT COPY or TRANSMIT

Fire Suppression System Components

REF	PART NO.	DESCRIPTION	COMMENTS
1	70427901	Union Tee	
2	70427701	Spray Nozzle Hose	2 required
3	70427601	Tube Assembly	
4	430497	Screw	12 required
5	70424201	Nozzle Bracket	2 required
6	70424401	Thermistor Plate	2 required
7	44064701	Thermistor	2 required
8	51780	Screw	4 required
9	70427801	Spray Nozzle	2 required
10	70428101	Elbow	2 required
11	70428601	Nozzle Bracket	2 required

© Copyright, Alliance Laundry Systems LLC – DO NOT COPY or TRANSMIT

Fire Suppression System Control Box

All Gas and Steam Models Except N and Y Models

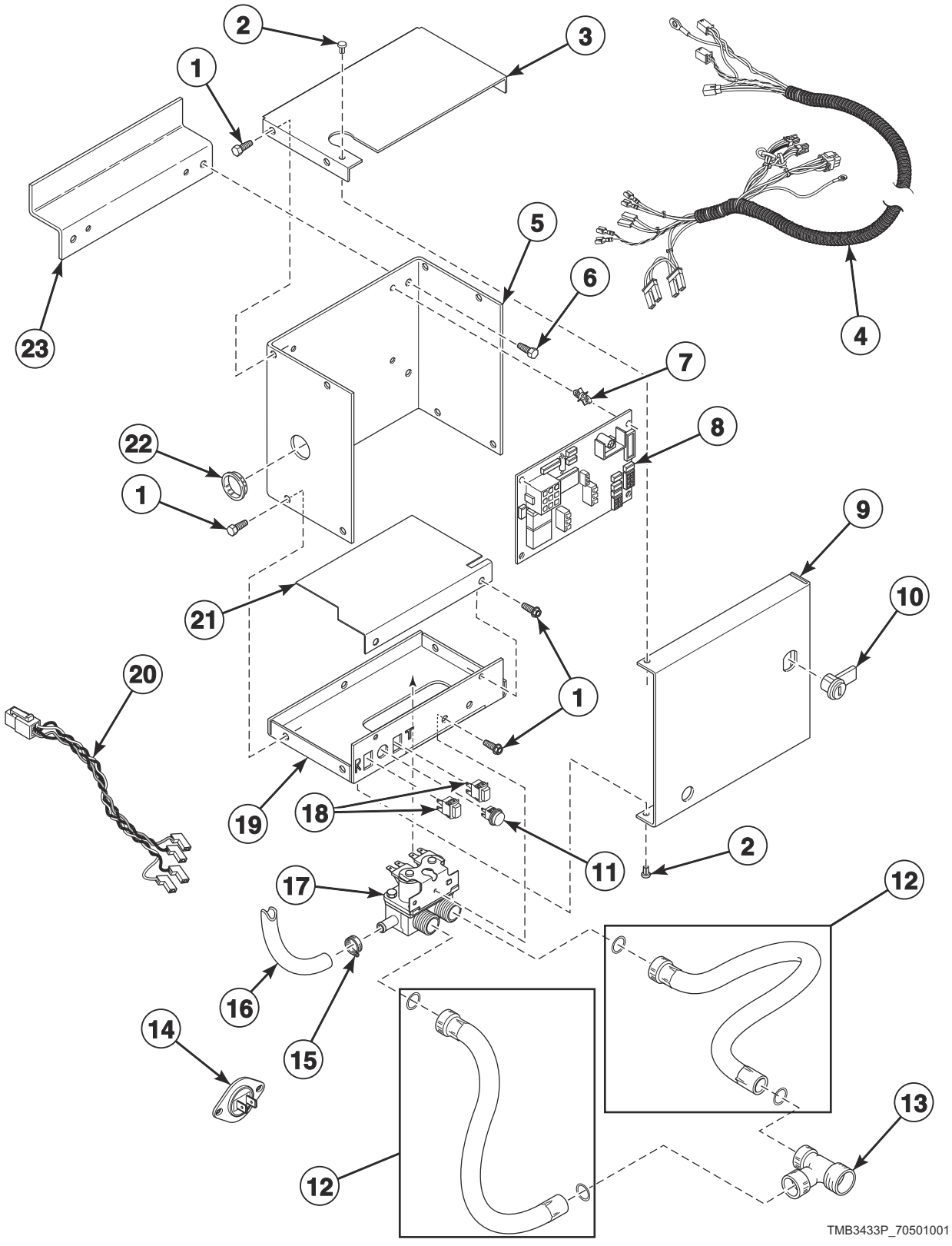

© Copyright, Alliance Laundry Systems LLC – DO NOT COPY or TRANSMIT

Fire Suppression System Control Box

REF	PART NO.	DESCRIPTION	COMMENTS
1	430497	Screw	
2	M400713	Drive Rivet	
3	44065401	Control Box Top	
4	70426501P	Control Harness	
5	44065101	Control Box Housing	
6	51780	Screw	
7	D501523	Circuit Board Support	4 required
8	44063801P	Control	
9	44065201	Control Box Cover	
10	70733701	Lock, Key and Nut Kit	RL001 key code; Optional if same key is to be used for control lock
11	801432	Light	
12	F200116	Fill Hose	2 required; Non-CE and non-Australian models
	38349P	Fill Hose Kit	CE and Australian models
13	44069101	Hose Fitting	Non-CE and non-Australian models
14	44064701	Thermistor	2 required
15	36801	Hose Clamp	
16	44073304	Hose	14 inches; Outlet hose
17	36958P	Mixing Valve	
18	801434W	Push-to-Start Switch	2 required
19	44065301	Control Box Base	
20	70426601P	Sensor Harness	
21	44065701	Mixing Valve Shield Bracket	
22	70178701	Snap Bushing	
23	44065901	Bracket	

© Copyright, Alliance Laundry Systems LLC – DO NOT COPY or TRANSMIT

Drive Motor Components for Nonreversing Models

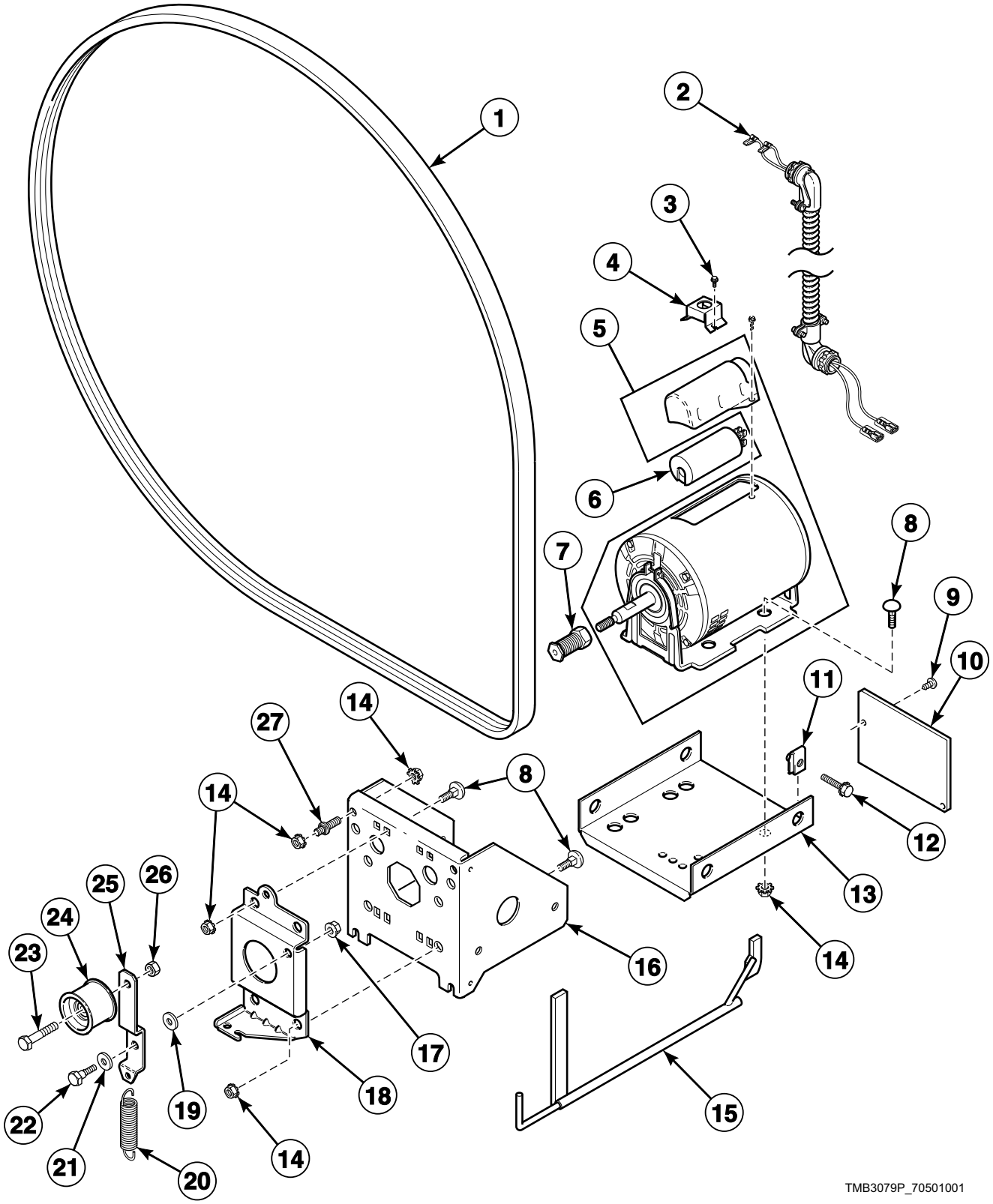

© Copyright, Alliance Laundry Systems LLC – DO NOT COPY or TRANSMIT

Drive Motor Components for Nonreversing Models

REF	PART NO.	DESCRIPTION	COMMENTS
1	70276205P	Belt	95.11 inches
2	70401001	Cylinder Motor Harness Assembly	Models through 2/28/10; 1 Phase; 3 Phase electric models with 240 Volt and below
	70401101	Cylinder Motor Harness Assembly	Models through 2/28/10; 3 Phase except electric models with 240 Volt and below
	70439701	Cylinder Motor Harness Assembly	Models starting 3/1/10; 1 Phase; 3 Phase electric models with 240 Volt and below
	70440101	Cylinder Motor Harness Assembly	Models starting 3/1/10; 3 Phase except electric models with 240 Volt and below
3	23222	Screw	2 required
4	70321701	Motor Conduit Mounting Bracket	
5	70337801P	Drive Motor	100 or 100-200 Volt/50 Hertz/1 Phase and 100 or 100-200 or 120 or 208-240 Volt/60 Hertz/1 Phase; Electric models, 200 volt/50 Hertz/1 Phase, 200 or 208 or 240 Volt/60 Hertz/1 Phase, 200 Volt/50 Hertz/3 Phase, 200-208 or 240 Volt/60 Hertz/3 Phase
	70337901P	Drive Motor Kit	120 or 208-240 Volt/60 Hertz/1 Phase; Low Amp
	70338001P	Drive Motor Kit	230 or 230-240 Volt/50 Hertz/1 Phase; Electric models, 230 or 230-240 Volt/50 Hertz/3 Phase
	70338101P	Drive Motor	200 or 230, 230-240, 380, 400, 400-415 Volt/50 Hertz/3 Phase; 200-208 or 240, 380, 440, 460-480 Volt/60 Hertz/3 Phase
6	M410296	Motor Capacitor	Start; For 70337801P Drive Motor and 70338001P Drive Motor Kit
	70211502	Motor Capacitor	Start; For 70337901 Drive Motor on 20 Amp models
	70211401	Motor Capacitor	Run; For 70337901 Drive Motor on 20 Amp models
7	70284202	Motor Pulley	60 Hertz
	70284204	Motor Pulley	50 Hertz
8	70062401	Bolt	
9	430497	Screw	
10	70202501	Drive Access Cover	
11	27222	Nut	4 required
12	70566401	Screw	
13	70127301	Motor Mount Bracket	
14	M412986	Nut	
15	M4853P3	Belt Tension Tool Kit	
16	70261701	Motor Channel	
17	29796	Nut	
18	70443301	Idler Bracket	
19	70270301	Washer	
20	70045301	Drum Idler Spring	With silencer
21	70265901	Washer	
22	M400056	Screw	
23	430648	Screw	
24	70050401P	Idler Wheel Assembly	
25	70259901	Cylinder Idler Arm	
26	56156	Nut	
27	70334701	Double Ended Stud	

© Copyright, Alliance Laundry Systems LLC – DO NOT COPY or TRANSMIT

Drive Motor Components for Reversing Models

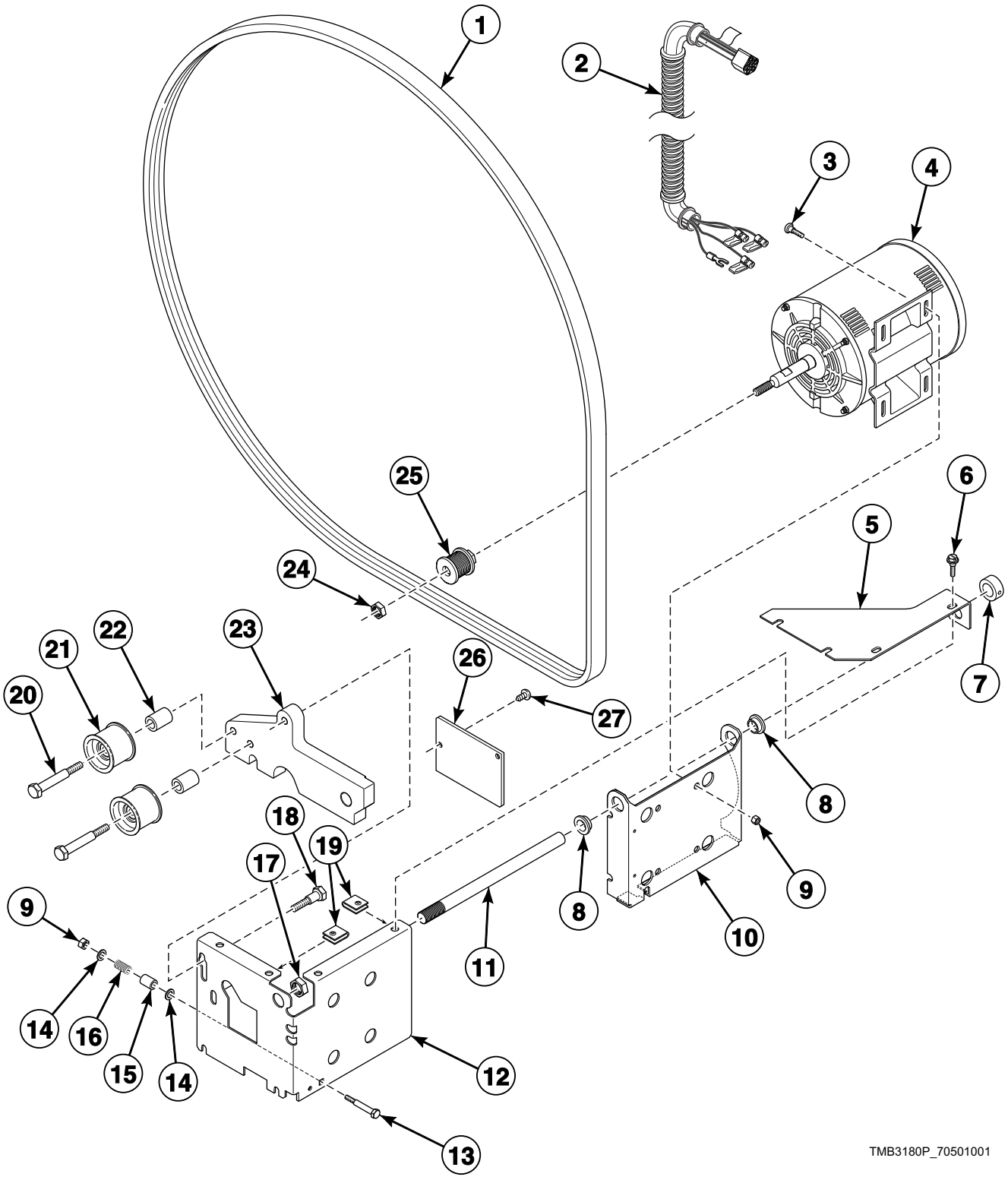

© Copyright, Alliance Laundry Systems LLC – DO NOT COPY or TRANSMIT

Drive Motor Components for Reversing Models

REF	PART NO.	DESCRIPTION	COMMENTS
1	70276205P	Belt	
2	70465801	Cylinder Motor Harness Assembly	
3	70062401	Bolt	4 required
4	70459001P	Drive Motor	200-208 or 240, 440, 460-480 Volt/60 Hertz/3 Phase and 380, 400-415 Volt/50 Hertz/3 Phase
5	70464201	Motor Plate Cover	2 required
6	M400057	Screw	8 required
7	70467001	Shaft Collar	
8	44239501	Bushing	2 required
9	M412986	Nut	5 required
10	44261401	Drive Motor Plate	
11	70464401	Support Rod	
12	70464101	Motor Bracket	
13	70467501	Bolt	
14	M405535	Washer	2 required
15	70471701	Spacer	
16	70467601	Compression Spring	
17	F431025	Nut	
18	F430116	Screw	4 required
19	27222	Nut	4 required
20	F8368701	Screw	2 required
21	70050401P	Idler Wheel Assembly	2 required
22	70464601	Idler Spacer	2 required
23	70464501	Idler Holder	
24	70466601	Nut	
25	70457403	Motor Pulley	50 Hertz
	70457401	Motor Pulley	60 Hertz
26	70466001	Belt Access Cover	
27	430497	Screw	

© Copyright, Alliance Laundry Systems LLC – DO NOT COPY or TRANSMIT

Blower Components

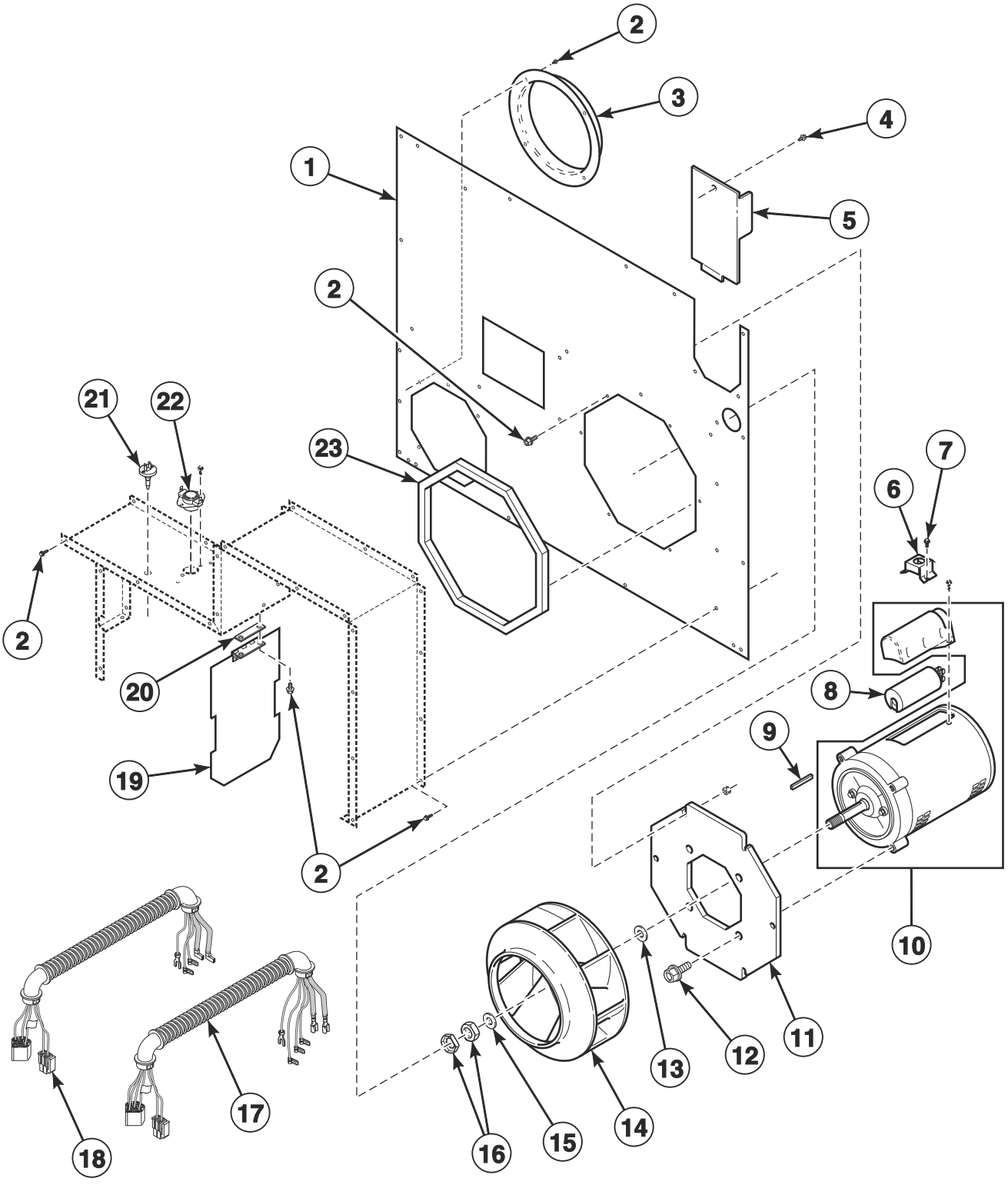

© Copyright, Alliance Laundry Systems LLC – DO NOT COPY or TRANSMIT

Blower Components

REF	PART NO.	DESCRIPTION	COMMENTS
1	70290101	Lower Rear Panel	
2	430497	Screw	
3	70017801	Exhaust Thimble	6 inches
4	M411072	Screw	
5	70196301	Drive Access Cover	
6	70321701	Motor Conduit Mounting Bracket	
7	23222	Screw	2 required
8	70211501	Motor Capacitor	Start; For all blower motors except 70342601P Blower Motor
9	70144101	Key	
10	70337501P	Blower Motor	100 or 100-200 Volt/50 Hertz/1 Phase and 100 or 100-200 or 120 or 208-240 Volt/60 Hertz/1 Phase; Electric models, 200 volt/50 Hertz/1 Phase, 200 or 208 or 240 Volt/60 Hertz/1 Phase, 200 Volt/50 Hertz/3 Phase, 200-208 or 240 Volt/60 Hertz/3 Phase
	70337601P	Blower Motor Kit	120 or 208-240 Volt/60 Hertz/1 Phase; Low Amp
	70337701P	Blower Motor Kit	230 or 230-240 Volt/50 Hertz/1 Phase; Electric models, 230 or 230-240 Volt/50 Hertz/3 Phase
	70342601P	Blower Motor	200 or 230, 230-240, 380, 400, 400-415 Volt/50 Hertz/3 Phase; 200-208 or 240, 380, 440, 460-480 Volt/60 Hertz/3 Phase
11	70349601	Blower Motor Mounting Plate	
12	70126101	Screw	
13	70599301	Fan Spacer	
14	70359801P	Blower Assembly	
15	F431131	Washer	
16	M400022	Nut	
17	70401301	Fan Motor Harness Assembly	Models through 2/28/10; 3 Phase except electric models with 240 Volt and below
	70440201	Fan Motor Harness Assembly	Models starting 3/1/10; 3 Phase except electric models with 240 Volt and below
18	70401201	Fan Motor Harness Assembly	Models through 2/28/10; 1 Phase; 3 Phase electric models with 240 Volt and below
	70439801	Fan Motor Harness Assembly	Models starting 3/1/10; 1 Phase; 3 Phase electric models with 240 Volt and below
19	70209501	Damper and Hinge Exhaust Assembly	
20	N/A	Damper Spacer	
21	M414704	Thermistor	
22	M411945	Manual Reset Thermostat	Australian models
	M411307	Limit Thermostat	All other models
23	70392701P	Gasket	For blower housing opening

N/A = Part no longer available

© Copyright, Alliance Laundry Systems LLC – DO NOT COPY or TRANSMIT

Moisture Sensing Components

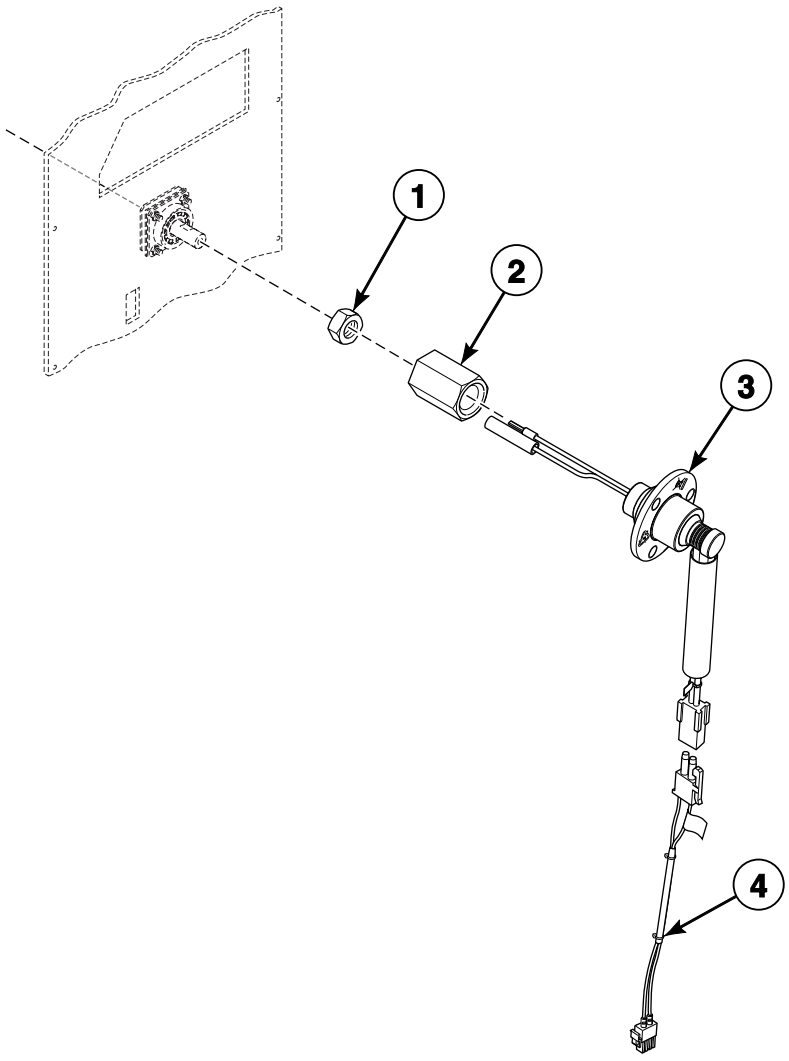

TMB3147P_70501001

© Copyright, Alliance Laundry Systems LLC – DO NOT COPY or TRANSMIT

Moisture Sensing Components

REF	PART NO.	DESCRIPTION	COMMENTS
	70468901	Moisture Sensor Test Wires	Use to troubleshoot the moisture sensor circuit
1	M400033	Nut	
2	70455401	Slip Ring Holder	
3	44222702	Slip Ring Assembly	
4	70448902	Moisture Sensor Harness Assembly	

© Copyright, Alliance Laundry Systems LLC – DO NOT COPY or TRANSMIT

Rotation Sensor

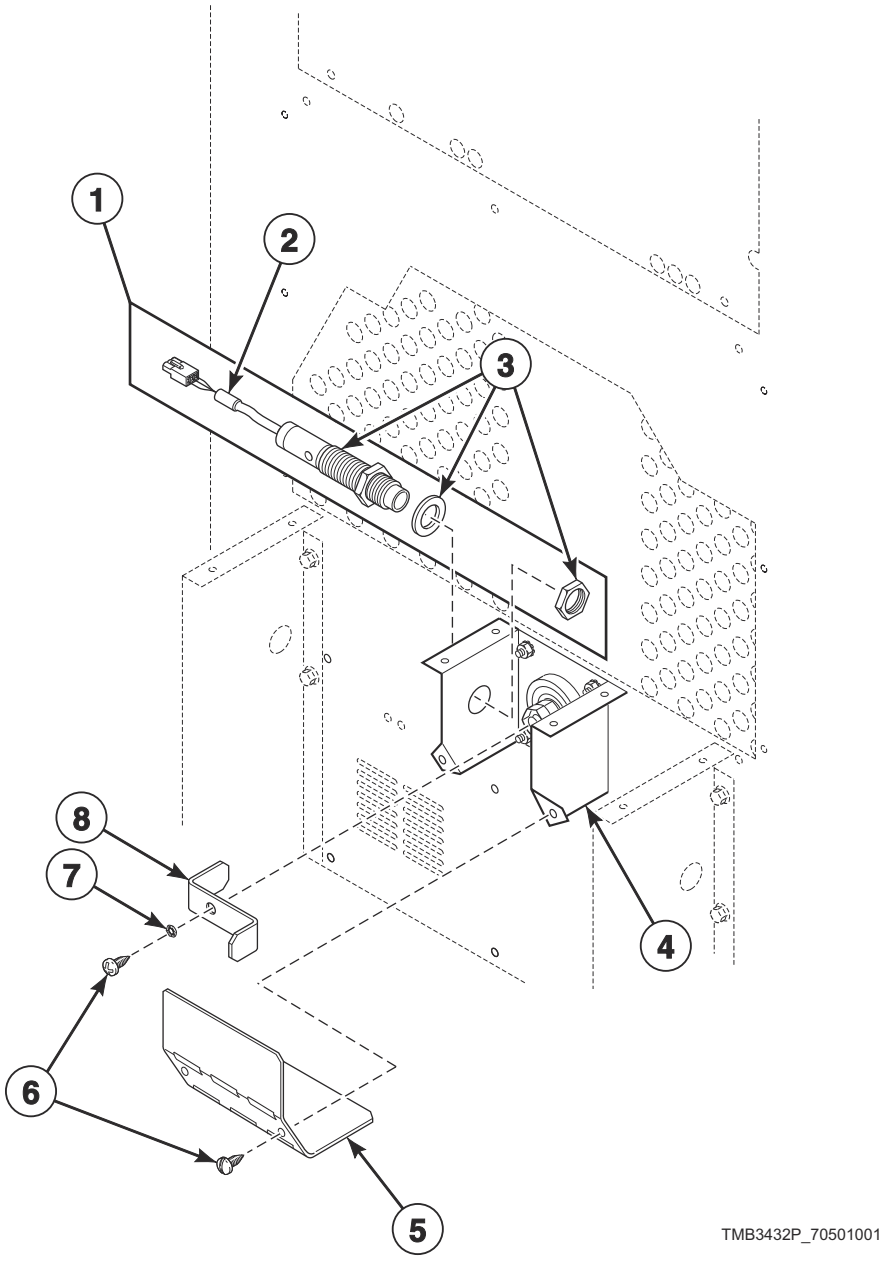

© Copyright, Alliance Laundry Systems LLC – DO NOT COPY or TRANSMIT

Rotation Sensor

REF	PART NO.	DESCRIPTION	COMMENTS
1	7009P	Rotation Sensor Kit	Includes items 2, 3 and 7; Models with 3B, 3K, 3L, 3O, 3V, 3W, 3X, DO, DV, DX and R3 control suffixes
2	70476101	Rotation Sensor Harness	Models with 3B, 3K, 3L, 3O, 3V, 3W, 3X, DO, DV, DX and R3 control suffixes
	F8066401	Rotation Sensor Harness	Models with EO, RE, RU and UO control suffixes
3	F8066201	Rotation Sensor	
4	70021401	Bearing Housing Bracket	
5	44044301	Rotation Sensor Cover	
6	70153301	Screw	
7	M400022	Nut	
8	44044401	Rotation Sensor Bracket	

© Copyright, Alliance Laundry Systems LLC – DO NOT COPY or TRANSMIT

Airflow Switch

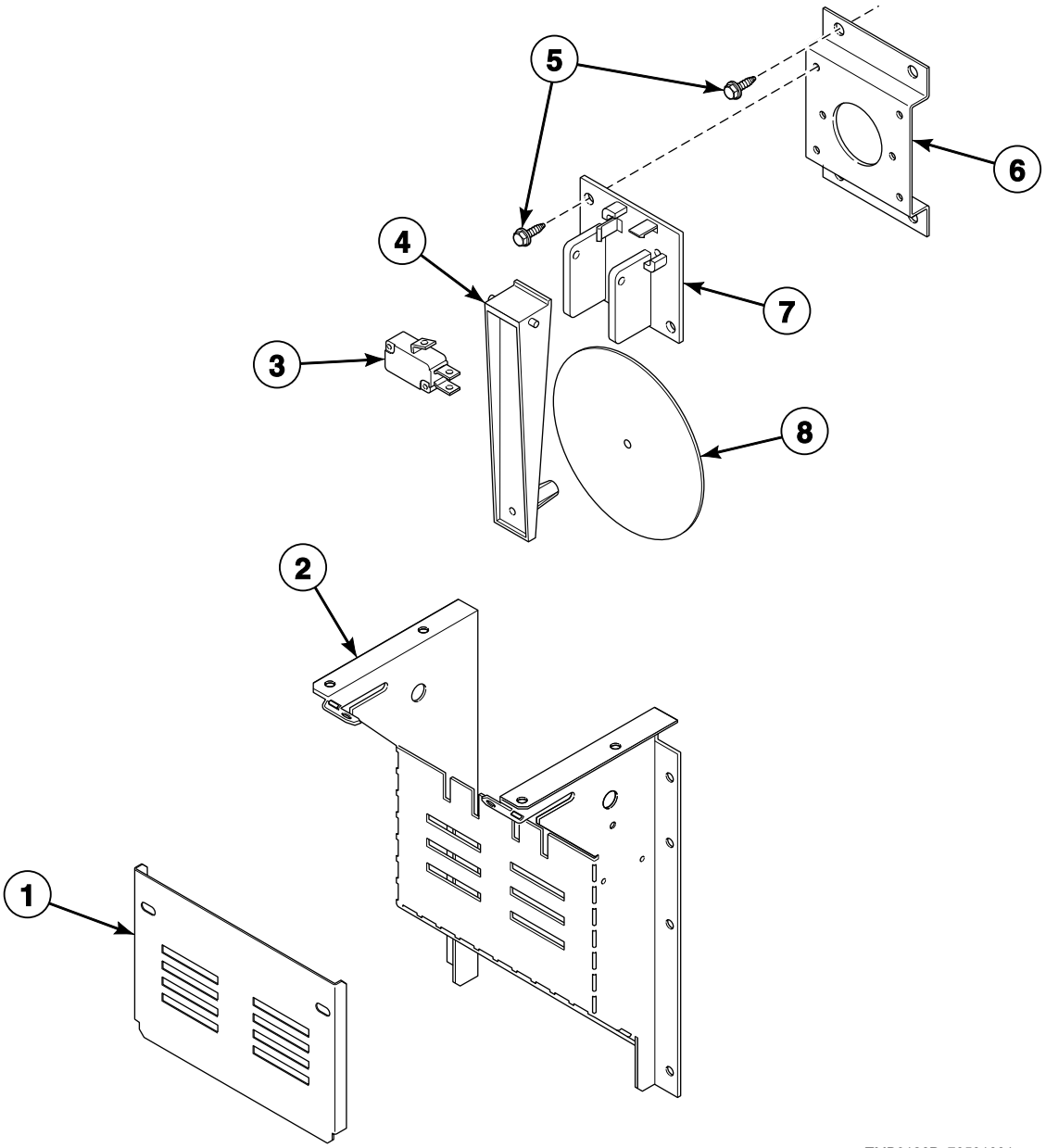

© Copyright, Alliance Laundry Systems LLC – DO NOT COPY or TRANSMIT

Airflow Switch

REF	PART NO.	DESCRIPTION	COMMENTS
1	70356601	Airflow Switch Cover	Non-moisture sensing
	70465701	Airflow Switch Cover	Moisture sensing
2	70356101	Airflow Switch Wrapper	
3	70411901	Switch	
4	70319401	Airflow Switch Arm	
5	430497	Screw	
6	70356301	Switch Bracket	
7	70319602	Airflow Switch and Arm Bracket	
8	70319201	Airflow Switch Vane	

© Copyright, Alliance Laundry Systems LLC – DO NOT COPY or TRANSMIT

Gas Burner Housing and Secondary Stove Limit

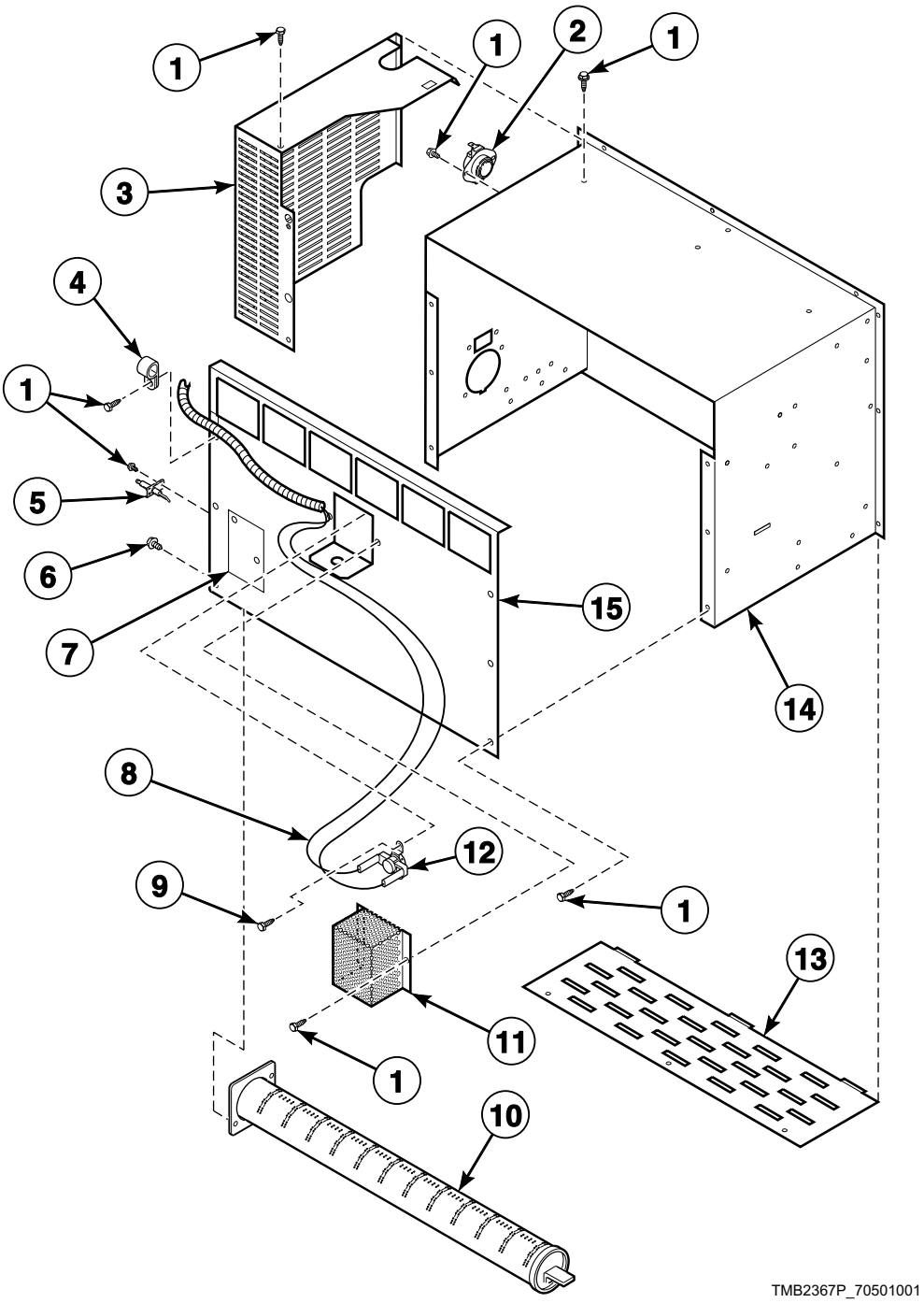

© Copyright, Alliance Laundry Systems LLC – DO NOT COPY or TRANSMIT

Gas Burner Housing and Secondary Stove Limit

REF	PART NO.	DESCRIPTION	COMMENTS
	M4902P3	Stove Limit Kit	Australian models; Models through Serial No. 0311000078; In addition, order 70299101 Secondary Stove Limit Kit
	70522701P	Direct Air Kit	
	70491801	Heat Exchanger	
1	430497	Screw	
2	70186301	Manual Reset Thermostat	Australian and Korean models
	M410542	Limit Thermostat	All other models
3	70381001	Gas Valve Cover	CE and Australian models; Models through 12/31/13
	70429901	Gas Valve Cover	CE and Australian models; Models starting 1/1/14
4	70203701	Pipe Clip	
5	70032801P	Spark Electrode	Models through 9/16/12
	70548701P	Spark Electrode	Models starting 9/17/12
6	05161	Screw	
7	70159601	Igniter Cover	
8	70316501	Stove Limit Harness	
9	M405188	Screw	2 required
10	70229801P	Gas Burner	
	70546701	Anti-Rattle Burner Assembly	Includes 70229801P Gas Burner, 431318 Control Door Latch and M400003 Pop Rivet
11	M414477	Thermostat Cover	
12	70299001	Limit Thermostat	Secondary
13	70188801	Burner Grill	
14	70333401	Stove Top and Sides	
15	70297401	Stove Back	

© Copyright, Alliance Laundry Systems LLC – DO NOT COPY or TRANSMIT

Gas Valve Assembly - Non-CE and Non-Australian Gas Models

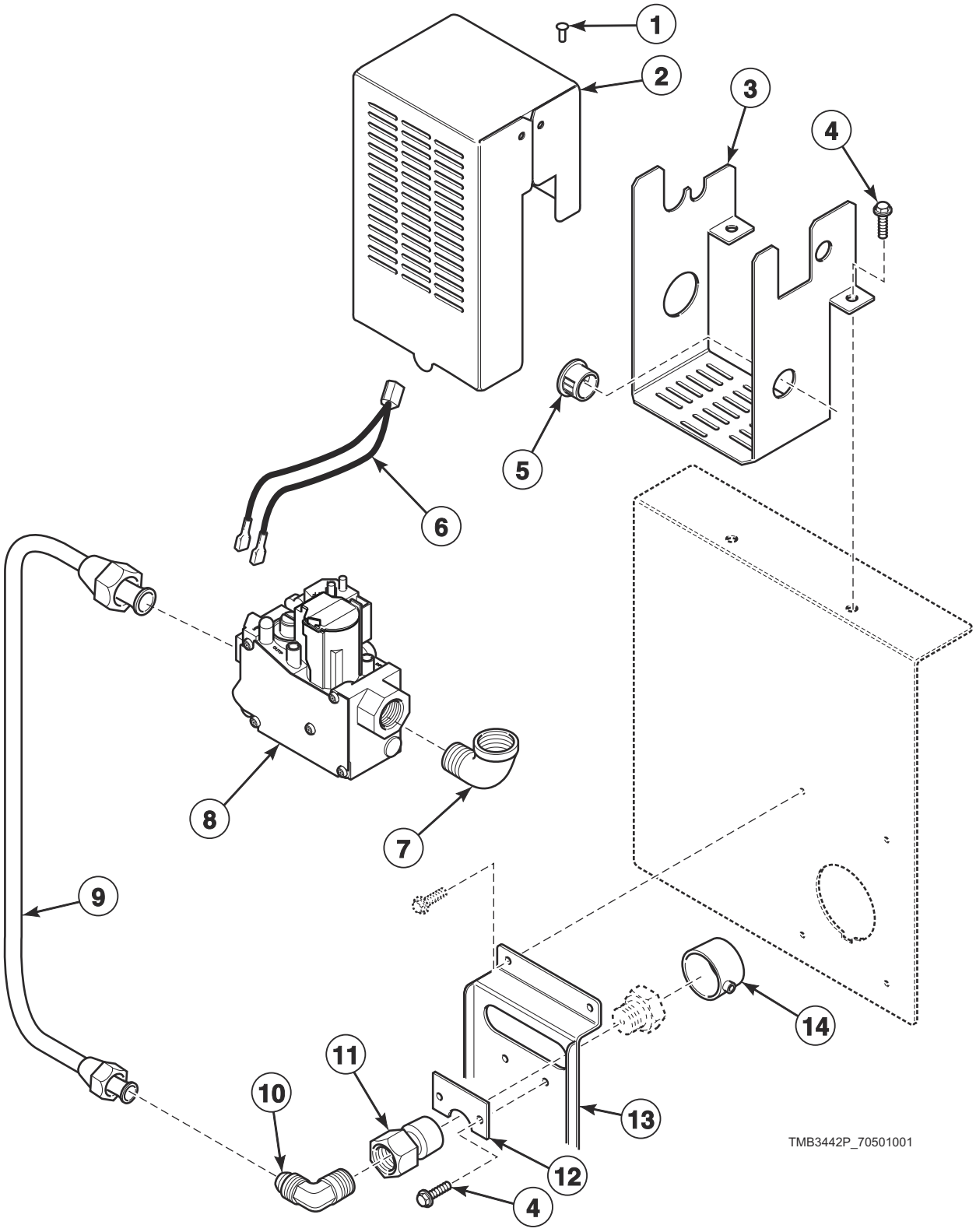

© Copyright, Alliance Laundry Systems LLC – DO NOT COPY or TRANSMIT

Gas Valve Assembly - Non-CE and Non-Australian Gas Models

REF	PART NO.	DESCRIPTION	COMMENTS
	M4703P3	L.P. Conversion Kit	Natural Gas (N.G.); 0-2,000 feet; 73,000 Btu input
	M4706P3	L.P. Conversion Kit	N.G.; 8,001-10,000 feet; 73,000 Btu input
	M4969P3	Replacement Gas Valve Kit	N.G.; Use to replace old valve before 2/1/10 with new valve
	M4971P3	Replacement Gas Valve Kit	Liquid Petroleum Gas (L.P.); Use to replace old valve before 2/1/10 with new valve
1	M405750	Pop Rivet	4 required
2	70429901	Gas Valve Cover	
3	70429801	Gas Valve Bracket	
4	430497	Screw	10 required
5	M400770	Snap Bushing	
6	M412997	Harness Assembly	
7	H86070034	Street Elbow	
8	44154501P	Gas Valve	N.G.; Models through 12/31/13
	44154502P	Gas Valve	L.P.; Models through 12/31/13
	44154503	N.G. Valve	Models starting 1/1/14
	44154504	L.P. Valve	Models starting 1/1/14
9	70271201	Gas Line Assembly	
10	70208701	Elbow	2 required
11	70379301	Orifice Adapter	
12	70249001	Orifice Keeper Bracket	
13	70248901	Orifice Holder Bracket	
14	70239801	Primary Air Adjustment Sleeve	

© Copyright, Alliance Laundry Systems LLC – DO NOT COPY or TRANSMIT

Burner Orifices - Non-CE and Non-Australian Gas Models

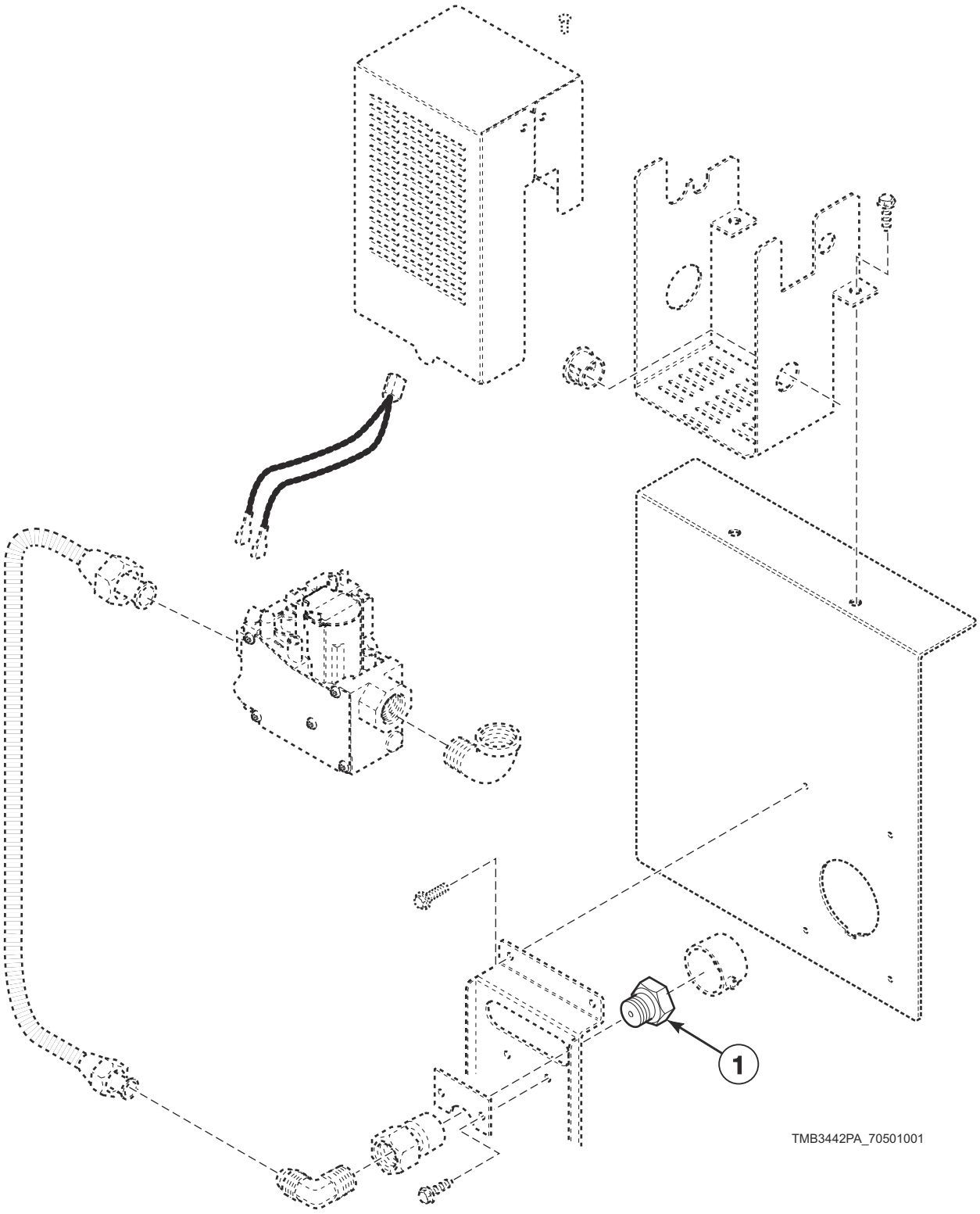

© Copyright, Alliance Laundry Systems LLC – DO NOT COPY or TRANSMIT

Burner Orifices - Non-CE and Non-Australian Gas Models

REF	PART NO.	DESCRIPTION	COMMENTS
1	70684100	Burner Orifice	Blank
	70684116	Burner Orifice	Liquid Petroleum Gas (L.P.); Drill no. 40 (2.5 mm); 0-2,000 feet; Standard models
	70684114	Burner Orifice	Standard models; L.P.; Drill no. 42 (2.4 mm); 2,001-6,000 feet
	70684112	Burner Orifice	Standard models; L.P.; Drill no. 43 (2.3 mm); 6,001-8,000 feet
	70684110	Burner Orifice	Standard models; L.P.; Drill no. 44 (2.2 mm); 8,001-10,000 feet
	70684142	Burner Orifice	Standard models; Natural Gas (N.G.); Drill no. 20 (2.9 mm); 0-2,000 feet
	70684140	Burner Orifice	Standard models; N.G.; Drill no. 22 (4.0 mm); 2,001-4,000 feet
	70684138	Burner Orifice	Standard models; N.G.; Drill no. 24 (3.9 mm); 4,001-6,000 feet
	70684136	Burner Orifice	Standard models; N.G.; Drill no. 26 (3.7 mm); 6,001-8,000 feet
	70684134	Burner Orifice	Standard models; N.G.; Drill no. 28 (3.6 mm); 8,001-10,000 feet
	70684132	Burner Orifice	Eco models; 50 Hertz; N.G.; Drill no. 29; 0-2,000 feet
	70684130	Burner Orifice	Eco models; 50 Hertz; N.G.; 3.3 mm; 2,001-4,000 feet
	70684128	Burner Orifice	Eco models; 50 Hertz; N.G.; Drill no. 1/8 (3.2 mm); 4,001-6,000 feet
	70684127	Burner Orifice	Eco models; 50 Hertz; N.G.; 3.1 mm; 6,001-8,000 feet
	70684125	Burner Orifice	Eco models; 50 Hertz; N.G.; Drill no. 32 (2.9 mm); 8,001-10,000 feet
	70684133	Burner Orifice	Eco models; 60 Hertz; N.G.; 3.5 mm ; 0-2,000 feet
	70684130	Burner Orifice	Eco models; 60 Hertz; N.G.; 3.3 mm; 2,001-4,000 feet
	70684128	Burner Orifice	Eco models; 60 Hertz; N.G.; Drill no. 1/8 (3.2 mm); 4,001-6,000 feet
	70684127	Burner Orifice	Eco models; 60 Hertz; N.G.; 3.1 mm; 6,001-8,000 feet
	70684126	Burner Orifice	Eco models; 60 Hertz; N.G.; Drill no. 31 (3.0 mm); 8,001-10,000 feet

© Copyright, Alliance Laundry Systems LLC – DO NOT COPY or TRANSMIT

Gas Valve and Piping - CE and Australian Gas Models

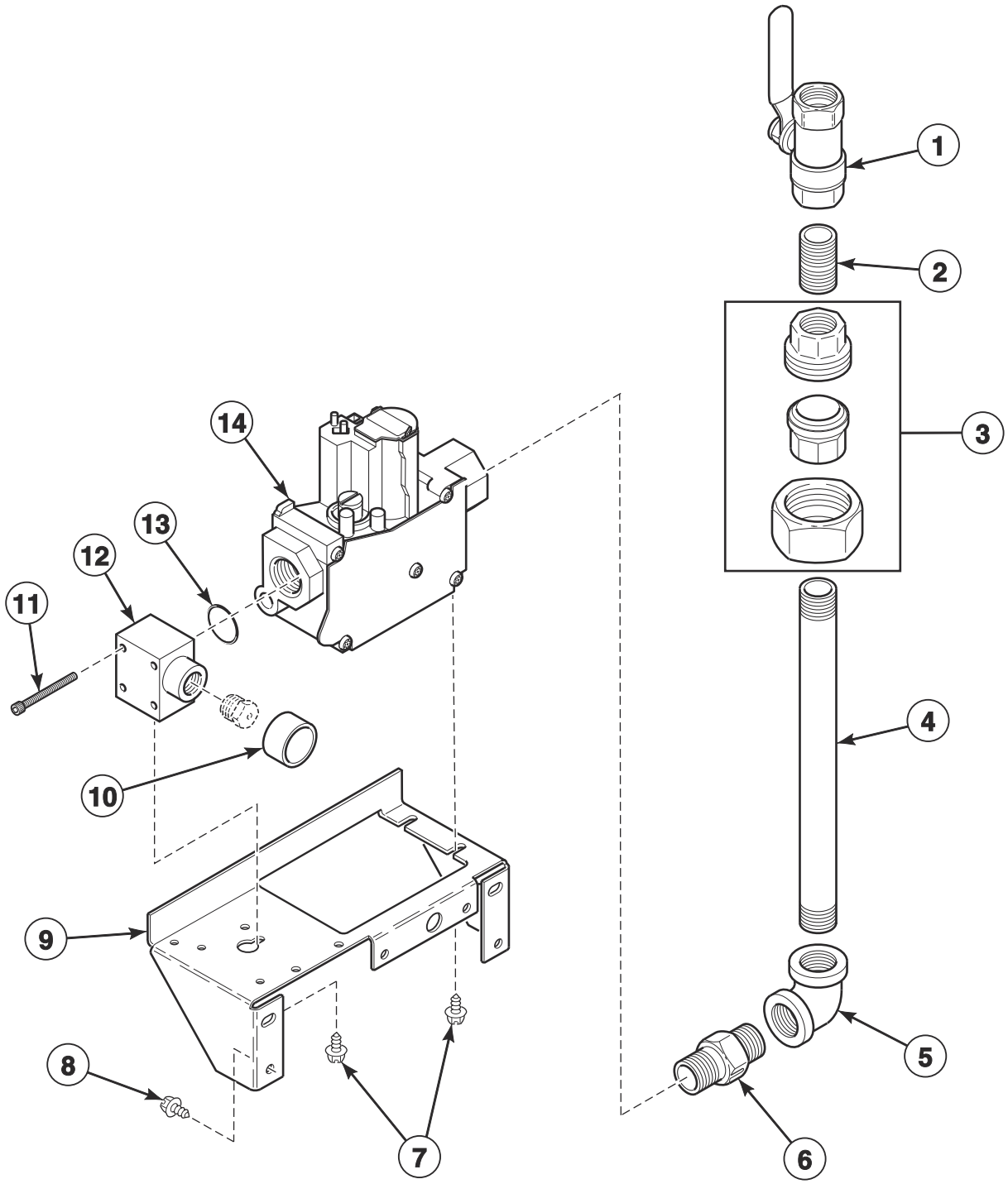

TMB3443P_70501001

© Copyright, Alliance Laundry Systems LLC – DO NOT COPY or TRANSMIT

Gas Valve and Piping - CE and Australian Gas Models

REF	PART NO.	DESCRIPTION	COMMENTS
	K555	L.P. Conversion Kit	Regulated; Natural Gas (N.G.) to Liquid Petroleum (L.P.); CE models; Must also order orifice, refer to Installation Manual
	M4703P3	L.P. Conversion Kit	N.G.; 0-2,000 feet; Australian models
	M405434P	L.P. Valve Conversion Kit	Unregulated; Must also order orifice, refer to Installation Manual; Use with 44154503 N.G. Valve
	70184001	Gas Valve Harness	CE models; Use with item 14
	M413650	Gas Valve Harness Assembly	Australian models; Use with item 14
	70239801	Primary Air Adjustment Sleeve	
	44257501	Gas Valve Coil Kit	Use to replace gas valve coils on 70457301P and 70457302P Valves
	70260101	Gas Valve Coil	24 Volt; Models through 12/31/13
1	M412562P	Gas Shut-Off Valve	Models through 1/31/10
2	901403	Pipe Nipple	1/2 NPT; Models through 1/31/10
3	H86000031	Union	Models through 1/31/10
4	70139601	Pipe Nipple	
5	70079601	Elbow	
6	70131901	Adapter	BPT/NPT
7	23222	Screw	
8	430497	Screw	
9	70233301	Gas Valve Bracket	
10	70239801	Primary Air Adjustment Sleeve	
11	431484	Screw	
12	70223501	Spud Adapter	
13	431482	O-Ring	
14	70457301P	N.G. Valve	Regulated; Models through 12/31/13
	44154503	N.G. Valve	Regulated; Models starting 1/1/14
	70457302P	L.P. Valve	Unregulated; Models through 12/31/13
	44154504	L.P. Valve	Unregulated; Models starting 1/1/14

NOTE: For CE gas and orifice information, refer to Installation Manual.

© Copyright, Alliance Laundry Systems LLC – DO NOT COPY or TRANSMIT

Electric Heater Components

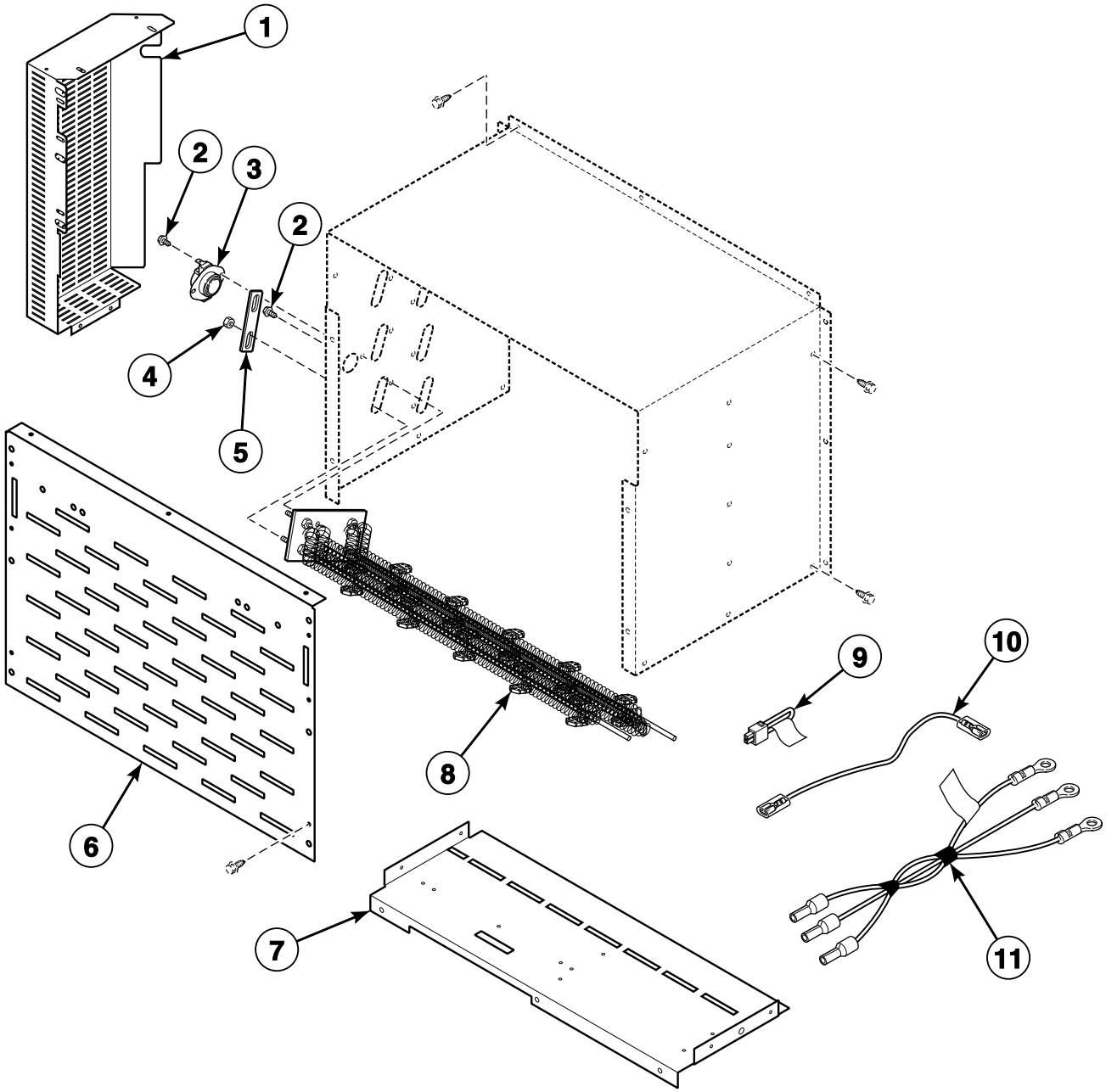

© Copyright, Alliance Laundry Systems LLC – DO NOT COPY or TRANSMIT

Electric Heater Components

REF	PART NO.	DESCRIPTION	COMMENTS
	70522801P	Direct Air Kit	
	70491801	Heat Exchanger	
1	70365201	Stove Connectors Cover	
2	430497	Screw	
3	M409443	Limit Thermostat	
4	70054	Nut	
5	70066501	Jumper Bar	2 required on 380, 400, 400-415 and 460-480 Volt
	M400869	Jumper Strip	3 required for 460-480 Volt; 6 required for all other models
6	70214901	Stove Grill	
7	70357201	Stove Partition	
8	70034401P	Heater Element	Standard models; Non-CE and non-Australian models; 3 required; 7 kW; 208 Volt heater element for 200-208 Volt/1 or 3 Phase
	70034402P	Heater Element	Standard models; 3 required; 7 kW; 220 Volt heater element for 380 and 440 Volt/3 Phase
	70034403P	Heater Element	Stanard models; 3 required; 7 kW; 240 Volt heater element for 230-240 Volt/1 or 3 Phase and 400-415 and 460-480 Volt/3 Phase
	70034415P	Heater Element	Eco models; 3 required; 4 kW; 208 Volt heater element for 200-208 Volt/3 Phase
	70034414P	Heater Element	Eco models; 3 required; 4 kW; 220 Volt heater element for 380 and 440 Volt/3 Phase
	70034416P	Heater Element	Eco models; 3 required; 4 kW; 240 Volt heater element for 400-415 Volt/50 Hertz or 240 and 460-480 Volt/60 Hertz
9	70316601	Stove Limit Bypass Harness	
10	70066601	Jumper Wire	1 required for 460-480 Volt
11	70371301P	Cable Set Heater Assembly	Heat contactor 1 to heating elements H1-H3
	70371401P	Cable Set Heater Assembly	Heat contactor 2 to heating elements H4-H6; 240 Volt or less

© Copyright, Alliance Laundry Systems LLC – DO NOT COPY or TRANSMIT

Steam Heater Components

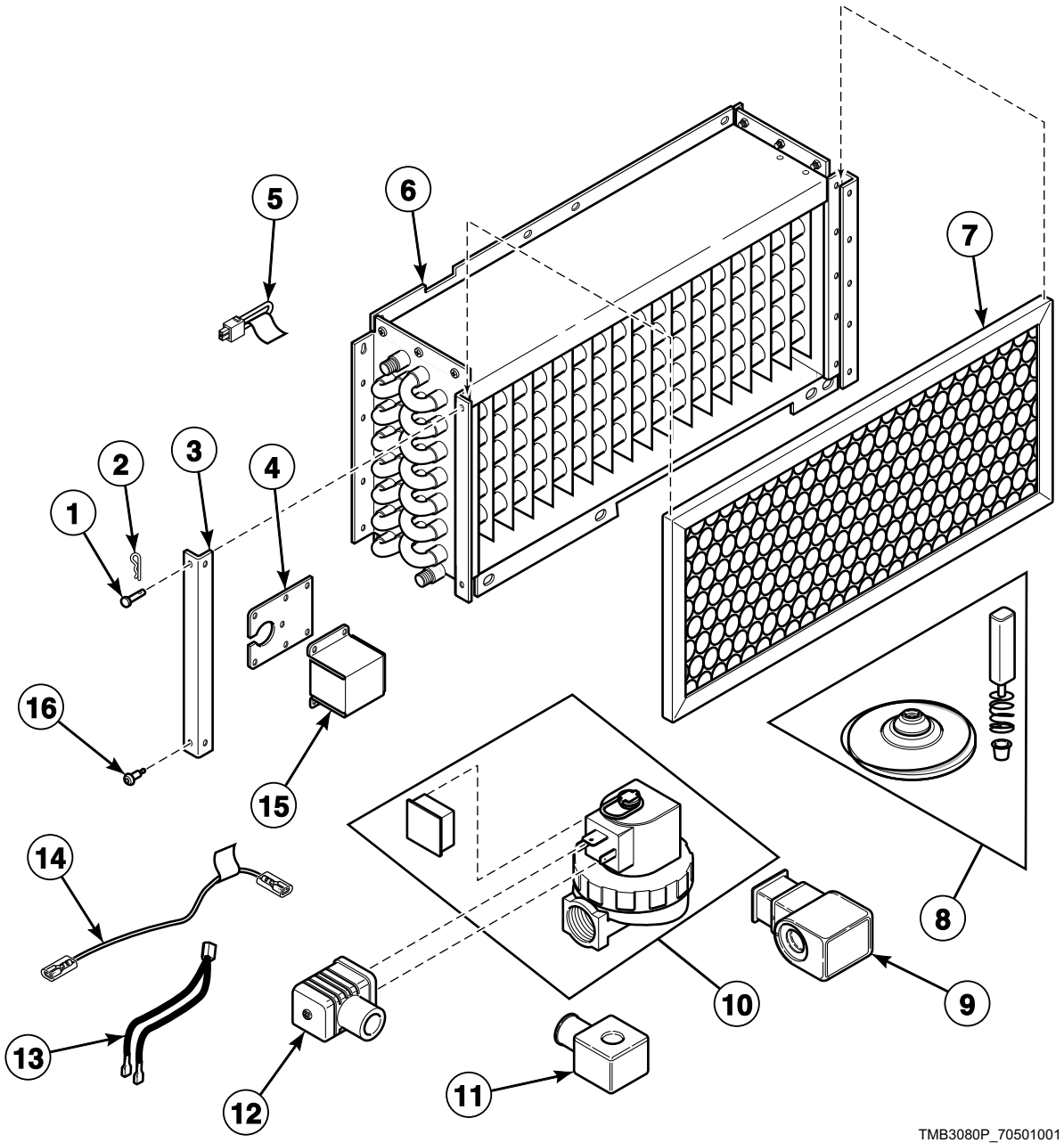

© Copyright, Alliance Laundry Systems LLC – DO NOT COPY or TRANSMIT

Steam Heater Components

REF	PART NO.	DESCRIPTION	COMMENTS
	F8382301	DIN Valve Adapter Kit	Use with F8322902 Steam Valve
	F8514801	Valve Coil	Use with F8322902 Steam Valve
1	70389201	Clevis Pin	To secure 70369301 Steam Filter Holder
2	70389301	Hairpin Cotter	To secure 70369301 Steam Filter Holder
3	70369301	Steam Filter Holder	
4	70369401	Steam Valve Harness Bracket	
5	70316601	Stove Limit Bypass Harness	
6	70369101P	Steam Coil	4 rows
7	70429401	Filter	CE models
	70036001	Air Filter	All other models
8	70351021P	Steam Valve Rebuild Kit	Parker; Use with 70351001P and 70351002P Steam Valves
	F8379502	Valve Rebuild Kit	Asco; Use with F8322902 and F8322903 Steam Valves
9	70351012	Steam Solenoid	24 Volt/50 Hertz
10	F8521701	Valve Kit	Parker valve replacement kit; To replace 70351001 Steam Valve
	F8322902	Steam Valve	60 Hertz: Asco
	F8322903	Steam Valve	50 Hertz
11	70351011P	Steam Solenoid	24 Volt/60 Hertz
12	70370301P	Solenoid Valve DIN Connector	
13	M412997	Harness Assembly	
14	70389901	Steam Stove Limit Bypass Harness	
15	70369501	Steam Valve Wiring Cover	
16	70058501	Pop Rivet	To secure 70369301 Steam Filter Holder

© Copyright, Alliance Laundry Systems LLC – DO NOT COPY or TRANSMIT

Control Tray Harnesses for Gas Models

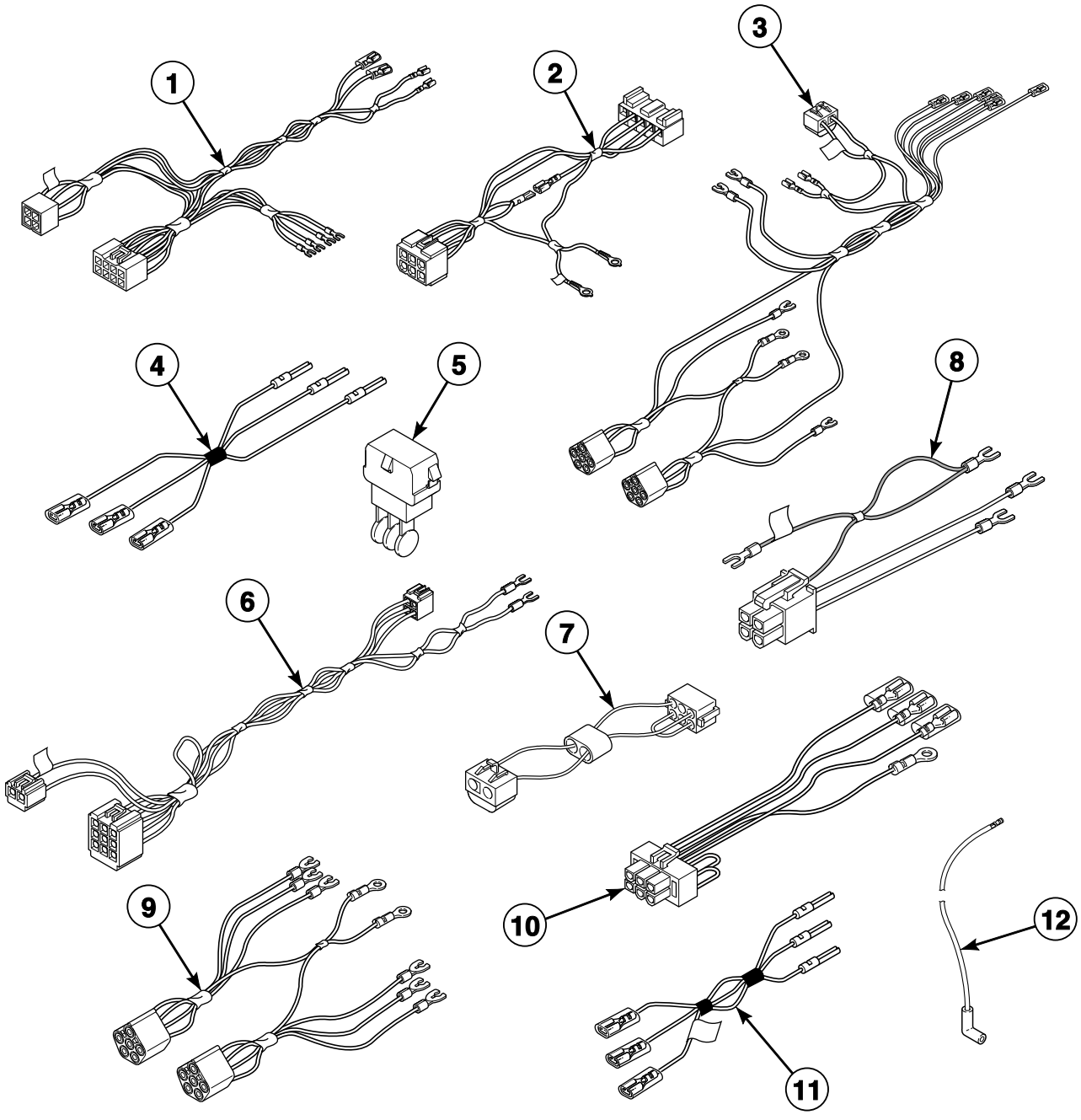

© Copyright, Alliance Laundry Systems LLC – DO NOT COPY or TRANSMIT

Control Tray Harnesses for Gas Models

REF	PART NO.	DESCRIPTION	COMMENTS
1	70315801	Junction Box Harness	Models through 7/8/12
	70464701	Control Tray Harness	Models starting 7/9/12
2	44186901	Ignition Control Harness	CE and Australian models; Models with EO, RE, RU and UO control suffixes
	44136601P	Ignition Control Harness	CE and Australian models; Models with all other control suffixes
	44186701	Ignition Control Harness	Non-CE models
3	70316101P	Power Harness	CE and Australian models through 2/28/10; 3 Phase models with less than 380 Volts
	70347701P	Power Harness	Models through 2/28/10; Contactor; 1 Phase
	70332201	Power Harness	Models through 2/28/10; 3 Phase models with 380 Volts or higher
	70439001	Power Harness	CE and Australian models starting 3/1/10 through 7/8/12; 3 Phase models with less than 380 Volts
	70445501	Power Harness	Models starting 3/1/10 through 7/8/12; Contactor; 1 Phase
	70438901	Power Harness	Models starting 3/1/10 through 7/8/12; 3 Phase models with 380 Volts or higher
	70464901	Power Harness	CE and Australian models starting 7/9/12; 3 Phase models with less than 380 Volts
	70469701	Power Harness	Models starting 7/9/12; Contactor; 1 Phase
	70465001	Power Harness	Models starting 7/9/12; 3 Phase models with 380 Volts or higher
4	70120901	Jumper Disconnect Assembly	CE and Australian models
5	M413863	Network Capacitor Assembly	3L, 3O, 3V, 3X, DO, DV, DX and OM control suffixes
6	70471901	Reversing Control Board Harness	3B, 3K, 3W, BB, BK, BW and BZ control suffixes
7	M413504	Jumper Harness Assembly	100 Volt
	M413505	Jumper Harness Assembly	120 Volt
	M413506	Jumper Harness Assembly	208 Volt
	M413507	Jumper Configuration Assembly	240 Volt
	M413508	Jumper Harness Assembly	380 Volt
	M413510	Jumper Configuration Assembly	480 Volt
8	70465301	Reversing Contactor Harness	Reversing models
9	70320201	Motor Contactor Harness	Models through 2/28/10; 3 Phase
	44142601P	Motor Contactor Harness	Models starting 3/1/10 through 7/8/12; 3 Phase
	70469301	Motor Contactor Harness	Models starting 7/9/12; 3 Phase
10	M413878	Network Capacitor Harness Assembly	Models through 7/8/12; 3L, 3O, 3V, 3X, DO, DV, DX and OM control suffixes
	44143401P	Network Capacitor Harness Assembly	Models starting 7/9/12; Also order 00177 Male Tab Terminal; 3L, 3O, 3V, 3X, DO, DV, DX and OM control suffixes
11	70342101	Gas Disconnect Harness	CE and Australian models through 2/28/10
	70440501	Gas Disconnect Harness	CE and Australian models starting 3/1/10
12	70006201	High Voltage Lead	Models through 9/16/12; Use with 70367301P or 70367401P Ignition Control
	44239702	High Voltage Suppression Cable	Models starting 9/17/12; Use with 70458601, 70458701 or 70483201 Ignition Control

© Copyright, Alliance Laundry Systems LLC – DO NOT COPY or TRANSMIT

Control Tray for Non-CE and Non-Australian Gas Models

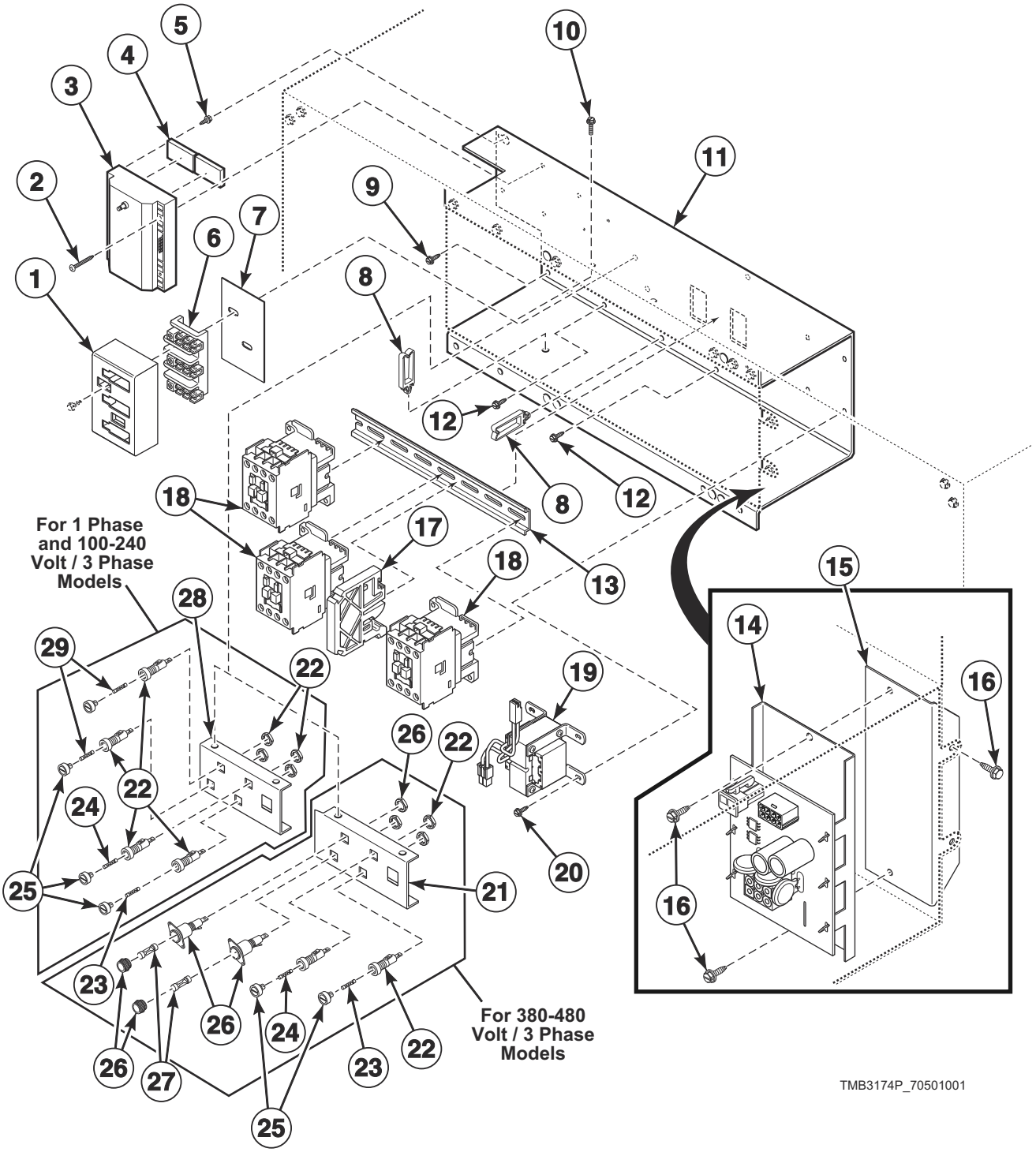

© Copyright, Alliance Laundry Systems LLC – DO NOT COPY or TRANSMIT

Control Tray for Non-CE and Non-Australian Gas Models

REF	PART NO.	DESCRIPTION	COMMENTS
	70030501	Expansion Clip	4 required; Used on item 19
	M403047	Secure Ground Label	
1	70333001	Terminal Block Shield	
2	51783	Screw	2 required
3	70492701	Ignition Control Kit	Models through 9/16/12; Use with 44239702 High Voltage Suppression Cable
	70458601P	Ignition Control	24 Volt; Models starting 9/17/12; Use with 44239702 High Voltage Suppression Cable
4	56128	Bumper Pad	2 required
5	38272	Screw	
6	430642	Terminal Block	
7	M413862	Insulator	
8	70366201	Wire Clip	
9	430497	Screw	3 required
10	51780	Screw	2 required
11	70469201	Control Tray	
12	M402917	Screw	4 required
13	M412693	Din Rail	
14	70469901	Reversing Control Assembly	3B, 3K, 3W, BB, BW and BZ control suffixes
15	70472601	Bracket	3B, 3K, 3W, BB, BW and BZ control suffixes
16	F8206901	Screw	4 required
17	F330186P	Interlock Contactor	Reversing models
18	70323701P	Contactor	1 required nonreversing models; 3 required reversing models
19	M414312P	Transformer	120 Volt; Dual secondary
	M414230P	Transformer	120 Volt; Primary/secondary
	M414228P	Transformer	100-240 Volt
	M414229P	Transformer	380-480 Volt
20	M411072	Screw	4 required
21	70313601	Fuse Bracket	380-480 Volt; Models through 2/28/10
	70313602	Fuse Bracket	380-480 Volt; Models starting 3/1/10
22	70329401P	Fuse Holder Body	Includes nuts; 3 required for 1 Phase; 4 required for 3 Phase
23	70406601	Fuse	3.5 Amp
24	70406501	Fuse	1.25 Amp
25	70329501	Fuse Holder Cap	3 required for 1 Phase and 380-480 Volt/3 Phase; 4 required for 100-240 Volt/3 Phase
26	M413544P	Fuse Holder	Includes nuts; 2 required for 380-480 Volt; Models through 2/28/10
	44155601P	Fuse Holder	2 required for 380-480 Volt; Models starting 3/1/10
27	44310001	Fuse	2 required for 380-480 Volt; 0.5 Amp
28	70306901	Fuse Bracket	100-240 Volt
29	70406701	Fuse	2 Amp; 100-240 Volt

© Copyright, Alliance Laundry Systems LLC – DO NOT COPY or TRANSMIT

Control Tray Components for CE and Australian Gas Models - (Drawing 1 of 2)

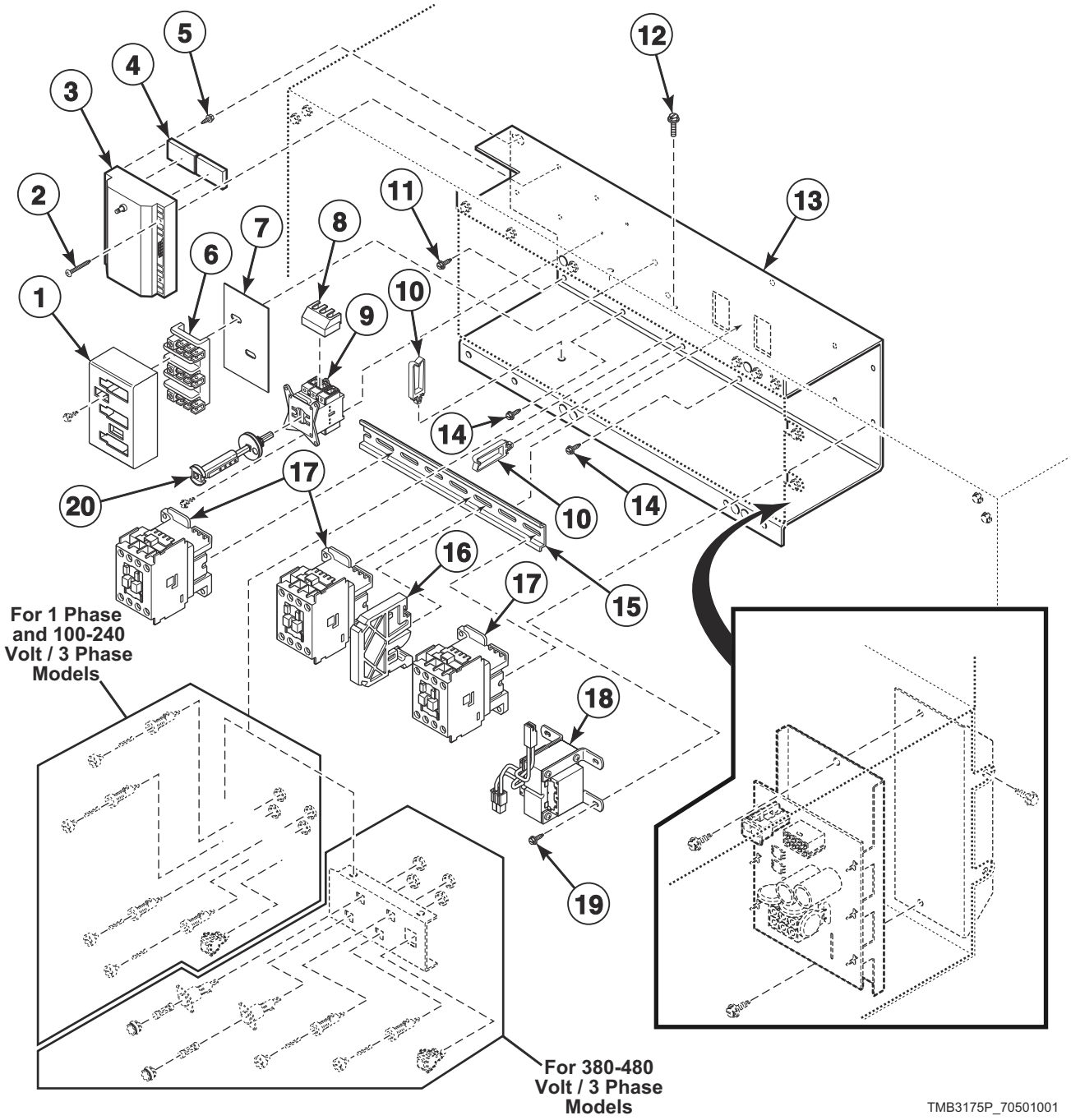

© Copyright, Alliance Laundry Systems LLC – DO NOT COPY or TRANSMIT

Control Tray Components for CE and Australian Gas Models - (Drawing 1 of 2)

REF	PART NO.	DESCRIPTION	COMMENTS
	70030501	Expansion Clip	4 required
	M403047	Secure Ground Label	
	M412096	Earth Terminal Sticker	
	51782	Screw	2 required
	70411001	ICM Reset Label	
	44324001	Warning Label	Extended tumble; On control tray cover
1	70333001	Terminal Block Shield	
2	51783	Screw	2 required
3	70492801	Ignition Control Kit	CE models through 1/16/13; Australian models through 1/16/13 and starting again 4/1/13 through 7/31/13; 24 Volt; Use with 44239702 High Voltage Suppression Cable
	70483201P	Ignition Control	CE models starting 1/17/13; Australian models starting 1/17/13 through 3/31/13 and starting again 8/1/13; 24 Volt; Use with 44239702 High Voltage Suppression Cable
4	56128	Bumper Pad	2 required
5	38272	Screw	
6	430642	Terminal Block	
7	M413862	Insulator	
8	M412366	Finger Guard	Models through 7/31/11
9	M412187P	Mounting Switch Base	Models through 7/31/11
10	70366201	Wire Clip	
11	430497	Screw	
12	51780	Screw	2 required
13	70469201	Control Tray	
14	M402917	Screw	
15	M412693	Din Rail	
16	F330186P	Interlock Contactor	Reversing models
17	70323701P	Contactor	1 required nonreversing models; 3 required reversing models
18	M414229P	Transformer	380-480 Volt
	M414228P	Transformer	100-240 Volt
19	M411072	Screw	4 required
20	70342501P	Extension Handle	Models through 7/31/11

© Copyright, Alliance Laundry Systems LLC – DO NOT COPY or TRANSMIT

Control Tray Components for CE and Australian Gas Models - (Drawing 2 of 2)

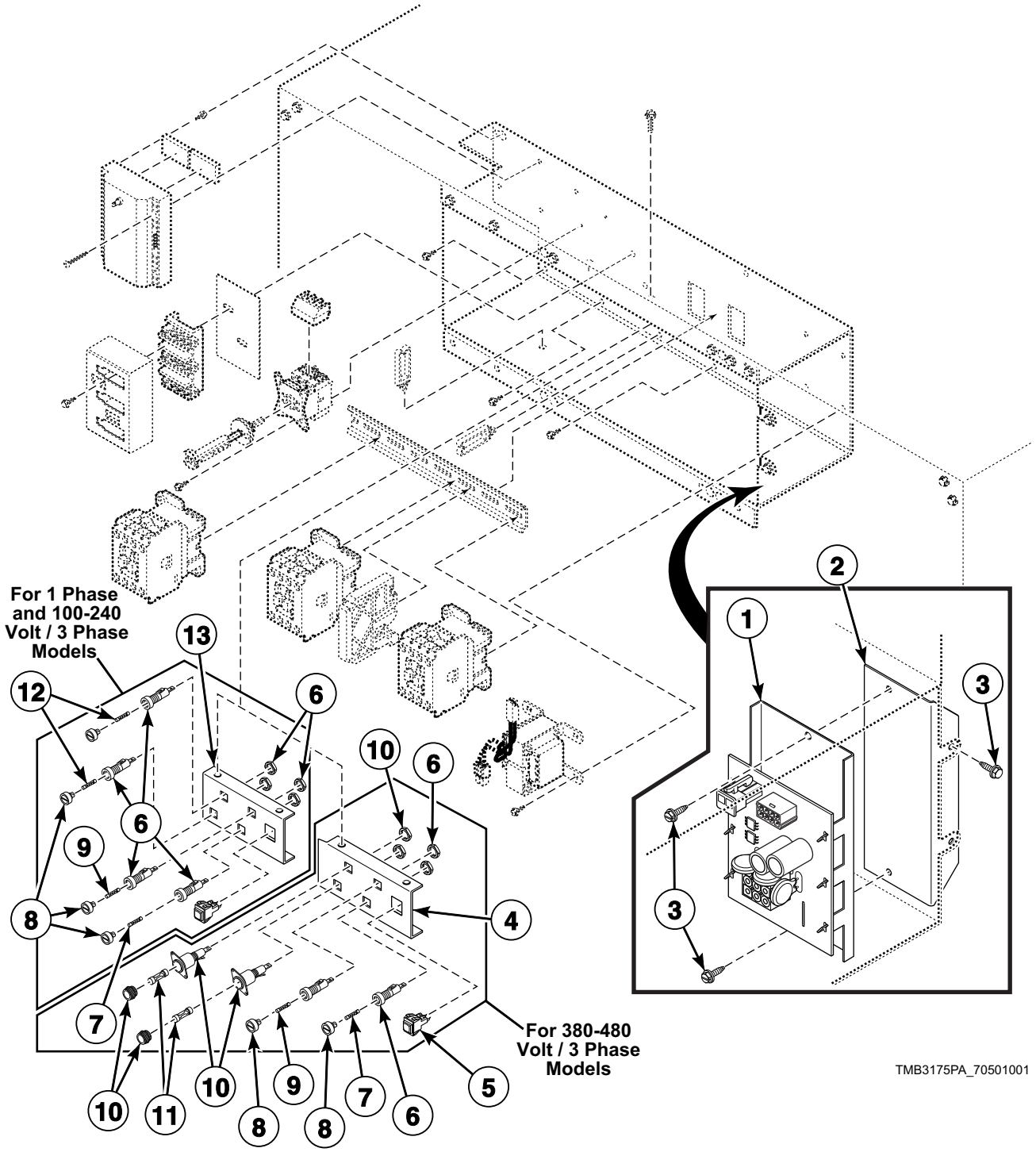

© Copyright, Alliance Laundry Systems LLC – DO NOT COPY or TRANSMIT

Control Tray Components for CE and Australian Gas Models - (Drawing 2 of 2)

REF	PART NO.	DESCRIPTION	COMMENTS
	70030501	Expansion Clip	4 required
	M403047	Secure Ground Label	
	M412096	Earth Terminal Sticker	
	51782	Screw	2 required
	D501086	Screw	4 required for item 10
	70411001	ICM Reset Label	
	44324001	Warning Label	Extended tumble; On control tray cover
1	70469901	Reversing Control Assembly	3B, 3K, 3W, BB, BW and BZ control suffixes
2	70472601	Bracket	3B, 3K, 3W, BB, BW and BZ control suffixes
3	F8206901	Screw	4 required
4	70313601	Fuse Bracket	380-480 Volt; Models through 2/28/10
	70313602	Fuse Bracket	380-480 Volt; Models starting 3/1/10
5	M413431	Pushbutton Switch	
6	70329401P	Fuse Holder Body	Includes nuts; 3 required for 1 Phase; 4 required for 3 Phase models with less than 380 Volts; 2 required for 3 Phase models with 380 Volts or higher
7	70406601	Fuse	3.5 Amp
8	70329501	Fuse Holder Cap	3 required for 1 Phase; 4 required for 3 Phase models with less than 380 Volts; 2 required for 3 Phase models with 380 Volts or higher
9	70406501	Fuse	1.25 Amp
10	M413544P	Fuse Holder	Includes nuts; 2 required for 380-480 Volt; Models through 2/28/10
	44155601P	Fuse Holder	2 required for 380-480 Volt; Models starting 3/1/10
11	44310001	Fuse	2 required for 380-415 Volt; 0.5 Amp
12	70406701	Fuse	1 required for 1 Phase; 2 required for 3 Phase; 2 Amp
13	70306901	Fuse Bracket	100-240 Volt

© Copyright, Alliance Laundry Systems LLC – DO NOT COPY or TRANSMIT

Control Tray Harnesses for Steam Models

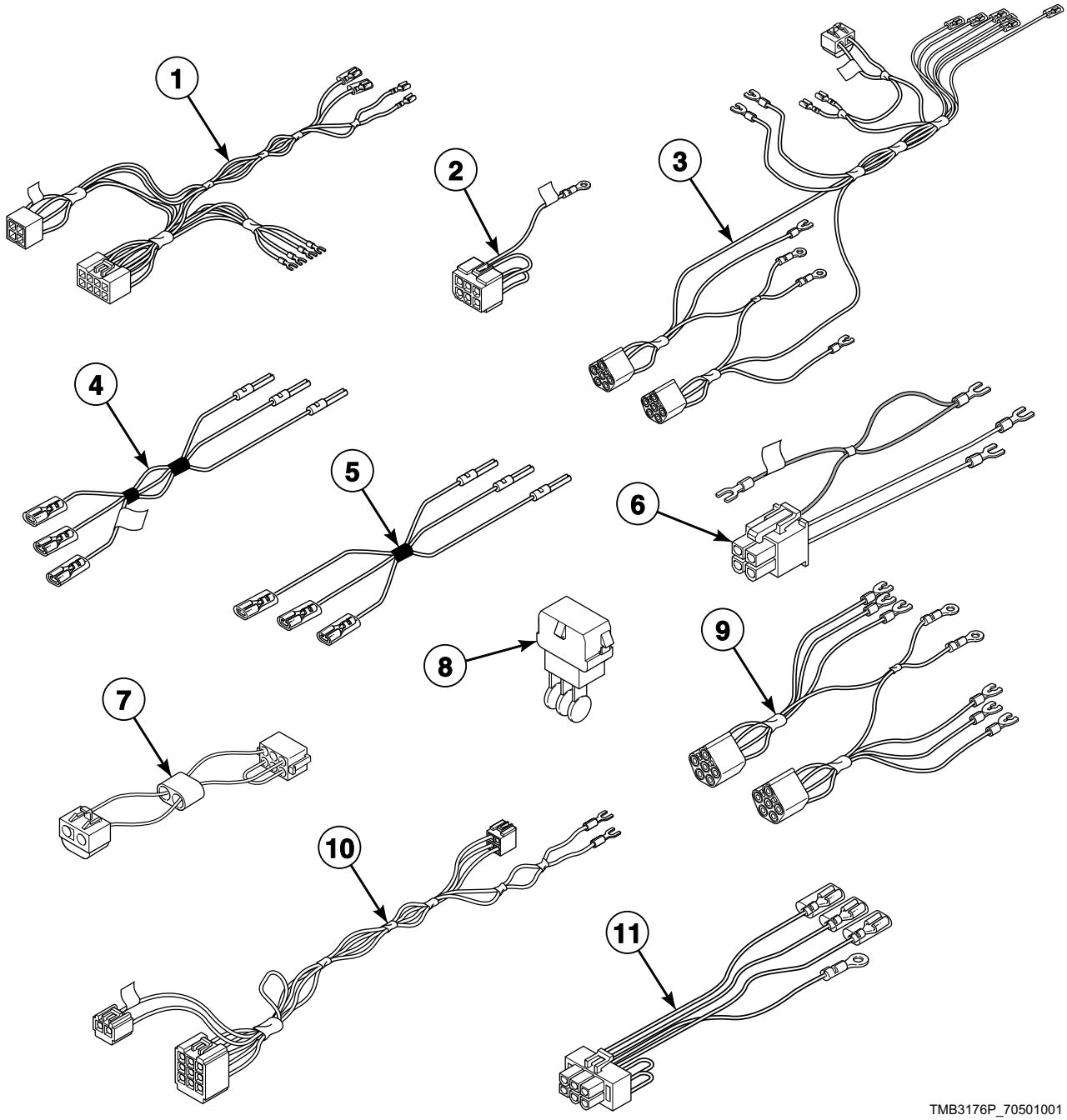

© Copyright, Alliance Laundry Systems LLC – DO NOT COPY or TRANSMIT

Control Tray Harnesses for Steam Models

REF	PART NO.	DESCRIPTION	COMMENTS
1	70315801	Junction Box Harness	Models through 7/8/12
	70464701	Control Tray Harness	Models starting 7/9/12
2	70322401P	Steam Configuration Harness	
3	70347701P	Power Harness	Models through 2/28/10; Contactor; 1 Phase
	70316101P	Power Harness	Models through 2/28/10; 3 Phase models with less than 380 Volts
	70332201	Power Harness	Models through 2/28/10; 3 Phase with 380 Volts or higher
	70445501	Power Harness	Models starting 3/1/10 through 7/8/12; Contactor; 1 Phase
	70439001	Power Harness	Models starting 3/1/10 through 7/8/12; 3 Phase models with less than 380 Volts
	70438901	Power Harness	Models starting 3/1/10 through 7/8/12; 3 Phase models with 380 Volts or higher
	70469701	Power Harness	Models starting 7/9/12; Contactor; 1 Phase
	70464901	Power Harness	Models starting 7/9/12; 3 Phase models with less than 380 Volts
	70465001	Power Harness	Models starting 7/9/12; 3 Phase models with 380 Volts or higher
4	70342101	Gas Disconnect Harness	CE models; Models through 2/28/10
	70440501	Gas Disconnect Harness	CE models; Models starting 3/1/10
5	70120901	Jumper Disconnect Assembly	CE models
6	70465301	Reversing Contactor Harness	Reversing models
7	M413504	Jumper Harness Assembly	100 Volt
	M413505	Jumper Harness Assembly	120 Volt
	M413506	Jumper Harness Assembly	208 Volt
	M413507	Jumper Configuration Assembly	240 Volt
	M413508	Jumper Harness Assembly	380 Volt
	M413510	Jumper Configuration Assembly	480 Volt
8	M413863	Network Capacitor Assembly	3L, 3O, 3V, 3X, DO, DV, DX and OM control suffixes
9	70320201	Motor Contactor Harness	Models through 2/28/10; 3 Phase models with 380 Volts or higher
	44142601P	Motor Contactor Harness	Models starting 3/1/10 through 7/8/12; 3 Phase models with 380 Volts or higher
	70469301	Motor Contactor Harness	Models starting 7/9/12; 3 Phase models with 380 Volts or higher
10	70471901	Reversing Control Board Harness	3B, 3K, 3W, BB, BW and BZ control suffixes
11	M413878	Network Capacitor Harness Assembly	Models through 7/8/12; 3O, 3V, 3X, DO, DV, DX and OM control suffixes
	44143401P	Network Capacitor Harness Assembly	Models starting 7/9/12; Also order 00177 Male Tab Terminal; 3L, 3O, 3V, 3X, DO, DV, DX and OM control suffixes

© Copyright, Alliance Laundry Systems LLC – DO NOT COPY or TRANSMIT

Control Tray for Non-CE Steam Models

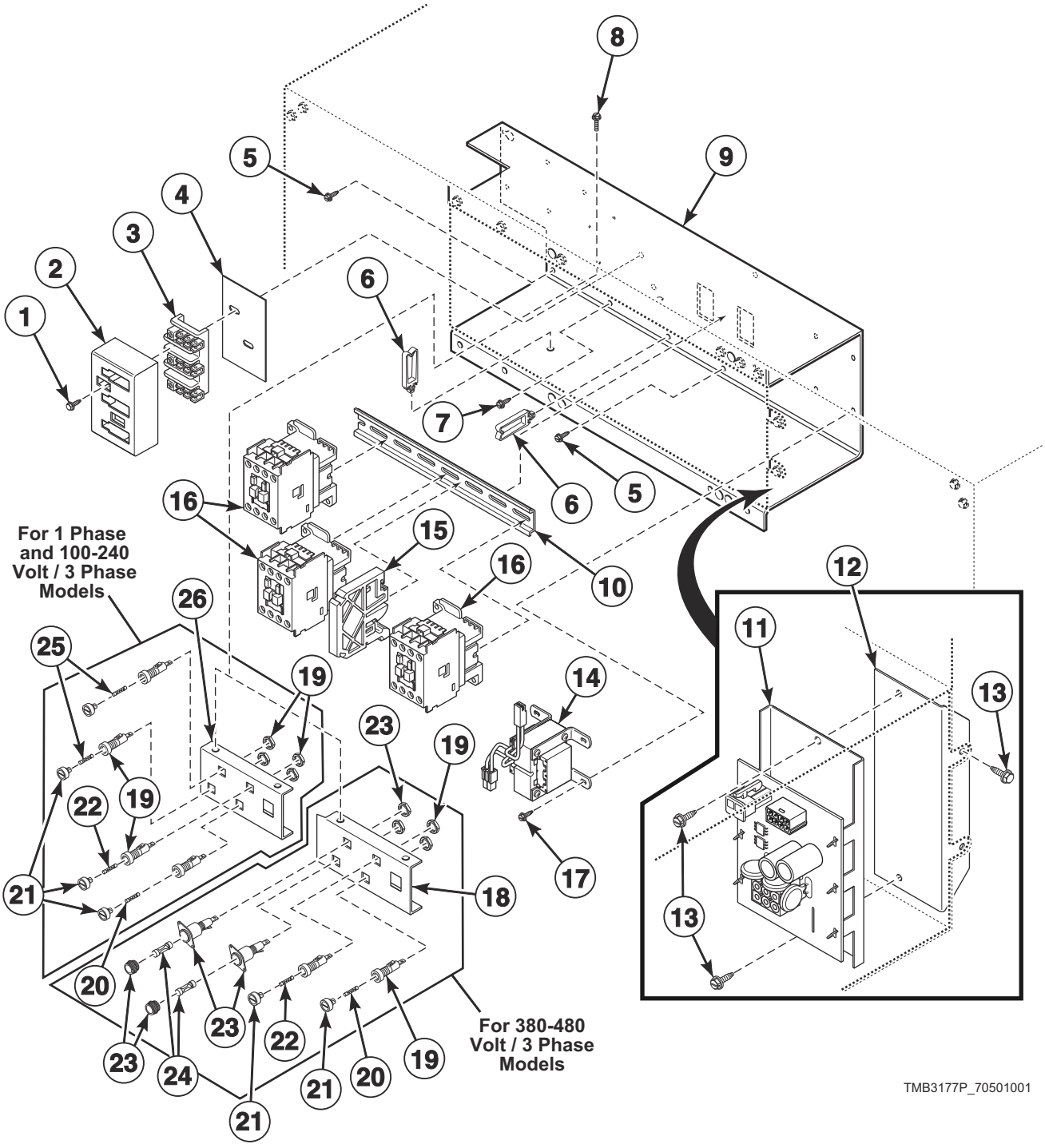

© Copyright, Alliance Laundry Systems LLC – DO NOT COPY or TRANSMIT

Control Tray for Non-CE Steam Models

REF	PART NO.	DESCRIPTION	COMMENTS
	D501086	Screw	4 required
	70030501	Expansion Clip	4 required
	M403047	Secure Ground Label	
1	51783	Screw	2 required
2	70333001	Terminal Block Shield	
3	430642	Terminal Block	
4	M413862	Insulator	
5	430497	Screw	
6	70366201	Wire Clip	
7	M402917	Screw	
8	51780	Screw	2 required
9	70469201	Control Tray	
10	M412693	Din Rail	
11	70469901	Reversing Control Assembly	3B, 3K, 3W, BB, BW and BZ control suffixes
12	70472601	Bracket	3B, 3K, 3W, BB, BW and BZ control suffixes
13	F8206901	Screw	4 required
14	M414312P	Transformer	120 Volt; Dual secondary
	M414230P	Transformer	120 Volt; Primary/secondary
	M414228P	Transformer	100-240 Volt
	M414229P	Transformer	380-480 Volt
	44074401	Transformer	440 Volt; Dual secondary
15	F330186P	Interlock Contactor	Reversing models
16	70323701P	Contactor	1 required nonreversing models; 3 required reversing models
17	M411072	Screw	4 required
18	70313601	Fuse Bracket	380-480 Volt; Models through 2/28/10
	70313602	Fuse Bracket	380-480 Volt; Models starting 3/1/10
19	70329401P	Fuse Holder Body	Includes nuts; 3 required for 1 Phase; 4 required for 3 Phase models with less than 380 Volts; 2 required for 3 Phase models with 380 Volts or higher
20	70406601	Fuse	3.5 Amp
21	70329501	Fuse Holder Cap	3 required for 1 Phase; 4 required for 3 Phase models with less than 380 Volts; 2 required for 3 Phase models with 380 Volts or higher
22	70406501	Fuse	1.25 Amp
23	M413544P	Fuse Holder	Includes nuts; 2 required for 380-480 Volt; Models through 2/28/10
	44155601P	Fuse Holder	2 required for 380-480 Volt; Models starting 3/1/10
24	44310001	Fuse	2 required for 380-480 Volt/3 Phase; 0.5 Amp
25	70406701	Fuse	2 required for 100-240 Volt/3 Phase
26	70306901	Fuse Bracket	100-240 Volt

© Copyright, Alliance Laundry Systems LLC – DO NOT COPY or TRANSMIT

Control Tray for CE Steam Models

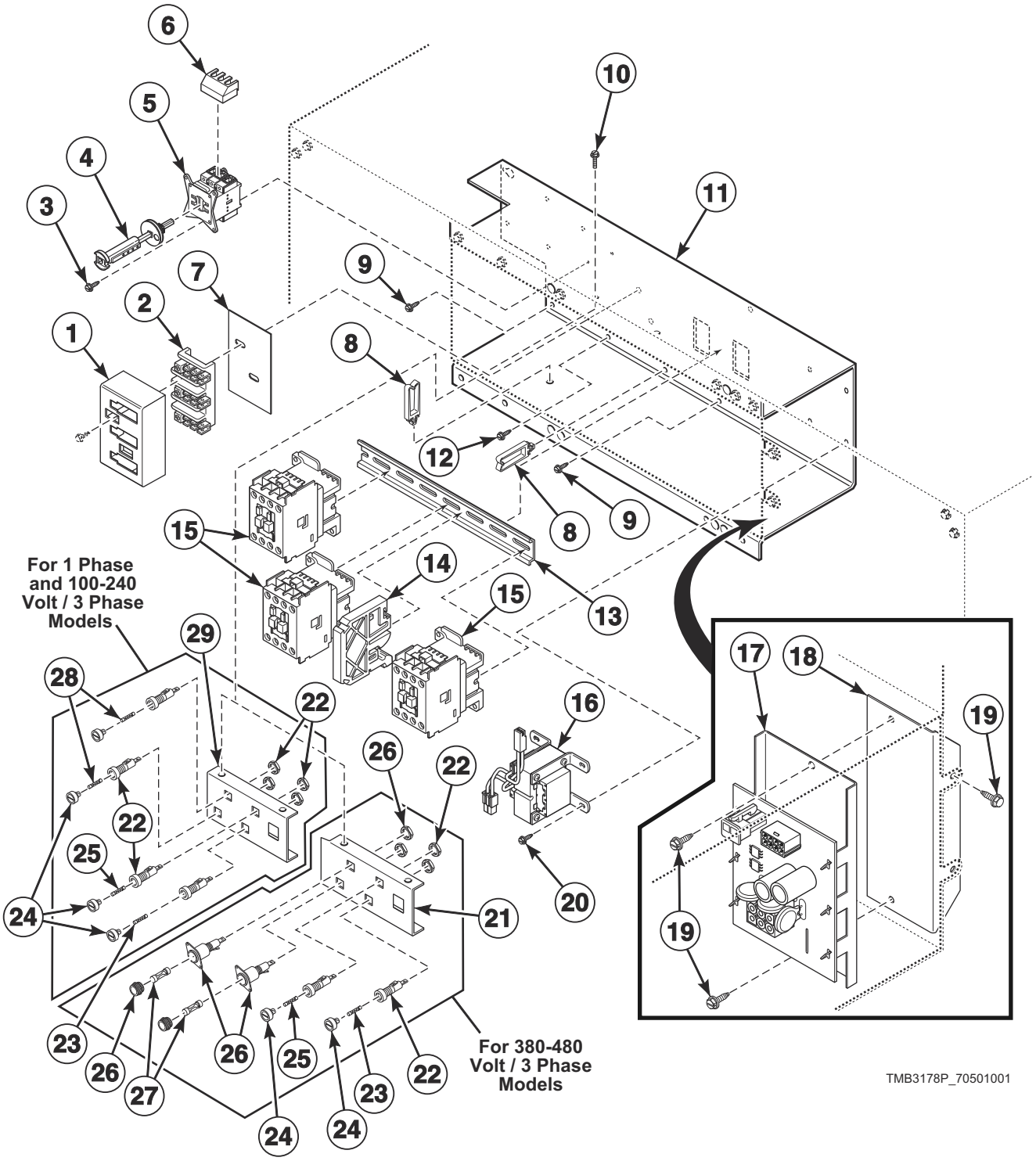

© Copyright, Alliance Laundry Systems LLC – DO NOT COPY or TRANSMIT

Control Tray for CE Steam Models

REF	PART NO.	DESCRIPTION	COMMENTS
	70030501	Expansion Clip	4 required
	M403047	Secure Ground Label	
	M412096	Earth Terminal Sticker	
	D501086	Screw	4 required
1	70333001	Terminal Block Shield	
2	430642	Terminal Block	
3	51782	Screw	2 required
4	70342501P	Extension Handle	Models through 7/31/11
5	M412187P	Mounting Switch Base	Models through 7/31/11
6	M412366	Finger Guard	Models through 7/31/11
7	M413862	Insulator	
8	70366201	Wire Clip	
9	430497	Screw	
10	51780	Screw	2 required
11	70469201	Control Tray	
12	M402917	Screw	
13	M412693	Din Rail	
14	F330186P	Interlock Contactor	Reversing models
15	70323701P	Contactor	1 required nonreversing models; 3 required reversing models
16	M414228P	Transformer	100-240 Volt
	M414229P	Transformer	380-480 Volt
	44074401	Transformer	440 Volt; Dual secondary
17	70469901	Reversing Control Assembly	3B, 3W, BB, BW and BZ control suffixes
18	70472601	Bracket	3B, 3W, BB, BW and BZ control suffixes
19	F8206901	Screw	4 required
20	M411072	Screw	4 required
21	70313601	Fuse Bracket	380-480 Volt; Models through 2/28/10
	70313602	Fuse Bracket	380-480 Volt; Models starting 3/1/10
22	70329401P	Fuse Holder Body	Includes nuts; 4 required for 1 Phase; 4 required for 3 Phase models with less than 380 Volts; 2 required for 3 Phase models with 380 Volts or higher
23	70406601	Fuse	3.5 Amp
24	70329501	Fuse Holder Cap	4 required for 1 Phase; 4 required for 3 Phase models with less than 380 Volts; 2 required for 3 Phase models with 380 Volts or higher
25	70406501	Fuse	1.25 Amp
26	M413544P	Fuse Holder	Includes nuts; 2 required for 380-480 Volt; Models through 2/28/10
	44155601P	Fuse Holder	2 required for 380-480 Volt; Models starting 3/1/10
27	44310001	Fuse	2 required for 380-480 Volt/3 Phase; 0.5 Amp
28	70406701	Fuse	1 required for 1 Phase; 2 required for 100-240 Volt/3 Phase; 2 Amp
29	70306901	Fuse Bracket	100-240 Volt

© Copyright, Alliance Laundry Systems LLC – DO NOT COPY or TRANSMIT

Control Tray Harnesses for Electric Models

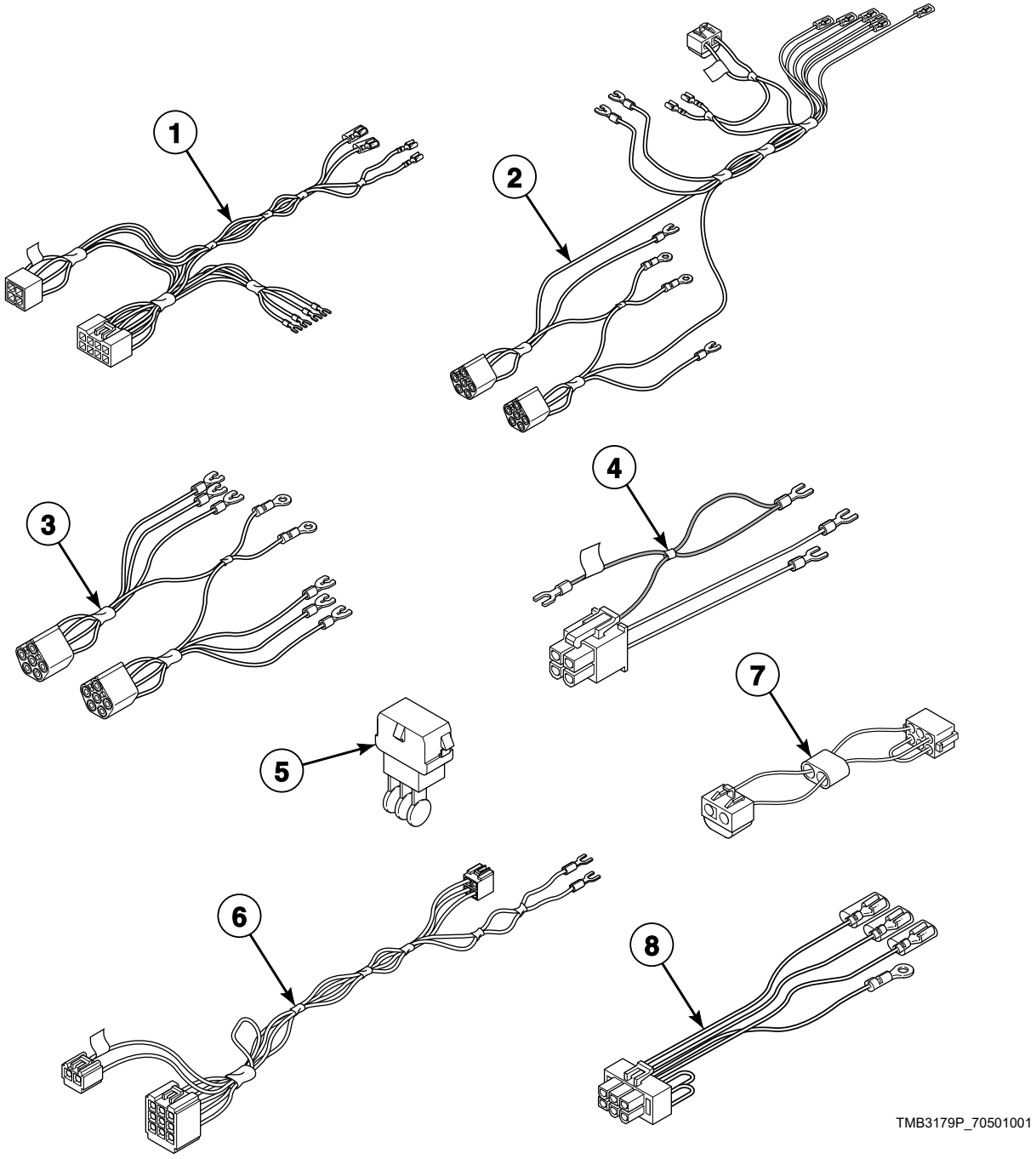

© Copyright, Alliance Laundry Systems LLC – DO NOT COPY or TRANSMIT

Control Tray Harnesses for Electric Models

REF	PART NO.	DESCRIPTION	COMMENTS
1	70315801	Junction Box Harness	Models through 7/8/12
	70464701	Control Tray Harness	Models starting 7/9/12
2	70347701P	Power Harness	Models through 2/28/10; 1 Phase; Contactor
	70316101P	Power Harness	Models through 2/28/10; 3 Phase models with less than 380 Volts
	70332201	Power Harness	Models through 2/28/10; 3 Phase models with 380 Volts or higher
	70445501	Power Harness	Models starting 3/1/10 through 7/8/12; 1 Phase; Contactor
	70439001	Power Harness	Models starting 3/1/10 through 7/8/12; 3 Phase models with less than 380 Volts
	70438901	Power Harness	Models starting 3/1/10 through 7/8/12; 3 Phase models with 380 Volts or higher
	70469701	Power Harness	Models starting 7/9/12; Contactor; 1 Phase
	70464901	Power Harness	Models starting 7/9/12; 3 Phase models with less than 380 Volts
	70465001	Power Harness	Models starting 7/9/12; 3 Phase models with 380 Volts or higher
3	70320201	Motor Contactor Harness	Models through 2/28/10; 3 Phase
	44142601P	Motor Contactor Harness	Models starting 3/1/10 through 7/8/12; 3 Phase
	70469301	Motor Contactor Harness	Models starting 7/9/12; 3 Phase
4	70465301	Reversing Contactor Harness	Reversing models
5	M413863	Network Capacitor Assembly	3L, 3O, 3V, 3X, DO, DV, DX and OM control suffixes
6	70471901	Reversing Control Board Harness	3B, 3K, 3W, BB, BW and BZ control suffixes
7	M413505	Jumper Harness Assembly	120 Volt
	M413506	Jumper Harness Assembly	208 Volt
	M413507	Jumper Configuration Assembly	240 Volt
	M413508	Jumper Harness Assembly	380 Volt
	M413509	Jumper Harness Assembly	415 Volt
	M413510	Jumper Configuration Assembly	480 Volt
8	M413878	Network Capacitor Harness Assembly	Models through 7/8/12; 3O, 3V, 3X, DO, DV, DX and OM control suffixes
	44143401P	Network Capacitor Harness Assembly	Models starting 7/9/12; Also order 00177 Male Tab Terminal; 3L, 3O, 3V, 3X, DO, DV, DX and OM control suffixes

© Copyright, Alliance Laundry Systems LLC – DO NOT COPY or TRANSMIT

Control Tray for Electric Models

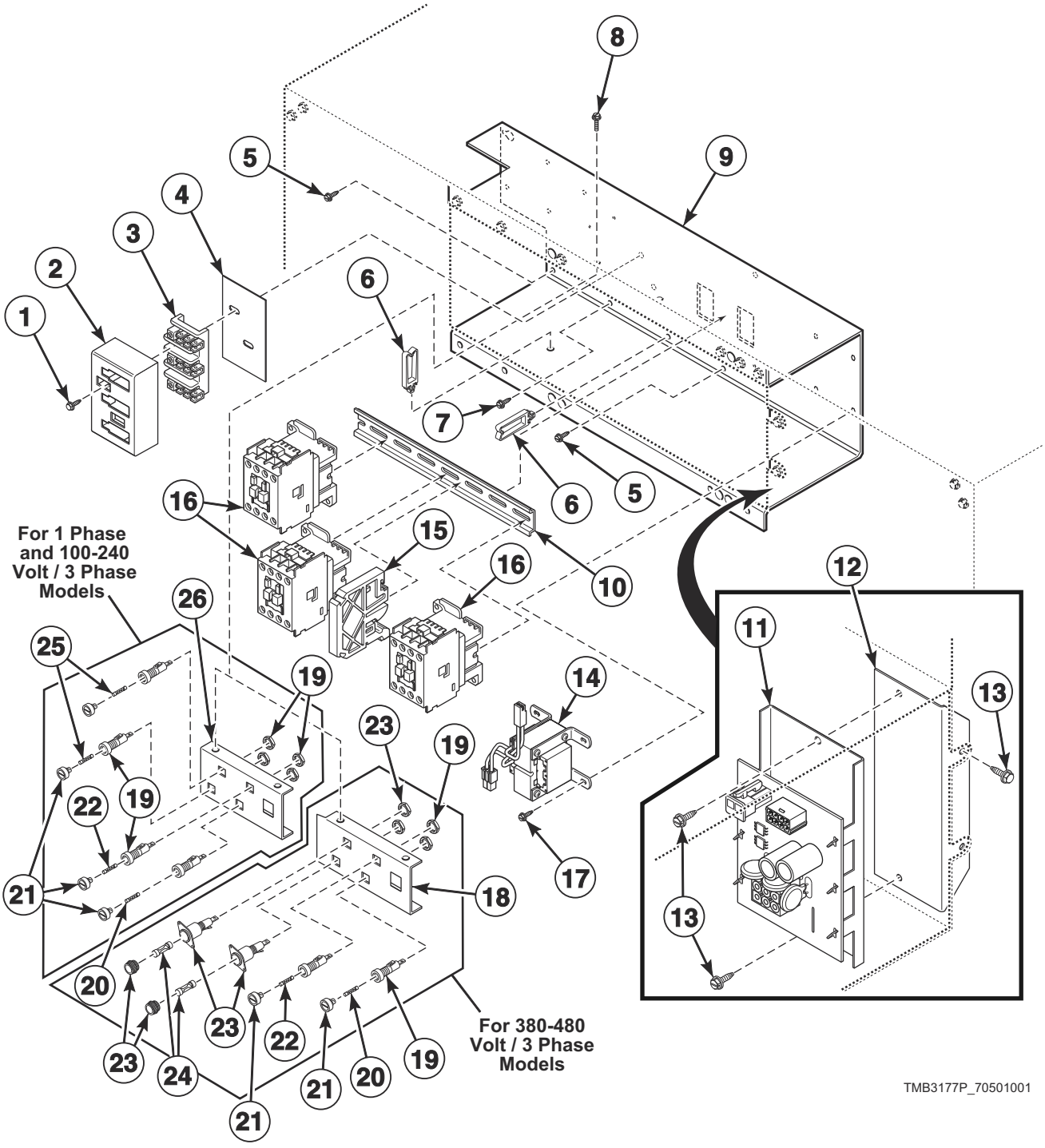

© Copyright, Alliance Laundry Systems LLC – DO NOT COPY or TRANSMIT

Control Tray for Electric Models

REF	PART NO.	DESCRIPTION	COMMENTS
	70030501	Expansion Clip	4 required
	D501086	Screw	4 required for item 23
	M412096	Earth Terminal Sticker	
	44324001	Warning Label	Extended tumble; On control tray cover
1	51783	Screw	2 required
2	70333001	Terminal Block Shield	
3	430642	Terminal Block	
4	M413862	Insulator	
5	430497	Screw	
6	70366201	Wire Clip	
7	M402917	Screw	
8	51780	Screw	2 required
9	70469201	Control Tray	
10	M412693	Din Rail	
11	70469901	Reversing Control Assembly	3B, 3K, 3W, BB, BW and BZ control suffixes
12	70472601	Bracket	3B, 3K, 3W, BB, BW and BZ control suffixes
13	F8206901	Screw	4 required
14	M414228P	Transformer	100-240 Volt
	M414229P	Transformer	380-480 Volt
	M414230P	Transformer	120 Volt; Primary/secondary
	M414312P	Transformer	120 Volt; Dual secondary
	44074401	Transformer	440 Volt; Dual secondary
15	F330186P	Interlock Contactor	Reversing models
16	70323701P	Contactor	1 required nonreversing models; 3 required reversing models
17	M411072	Screw	4 required
18	70313601	Fuse Bracket	380-480 Volt; Models through 2/28/10
	70313602	Fuse Bracket	380-480 Volt; Models starting 3/1/10
19	70329401P	Fuse Holder Body	Includes nuts; 3 required for 1 Phase; 4 required for 3 Phase models with less than 380 Volts; 2 required for 3 Phase models with 380 Volts or higher
20	70406601	Fuse	3.5 Amp
21	70329501	Fuse Holder Cap	3 required for 1 Phase; 4 required for 3 Phase models with less than 380 Volts; 2 required for 3 Phase models with 380 Volts or higher
22	70406501	Fuse	1.25 Amp
23	M413544P	Fuse Holder	Includes nuts; 2 required for 380-480 Volt; Models through 2/28/10
	44155601P	Fuse Holder	2 required for 380-480 Volt; Models starting 3/1/10
24	44310001	Fuse	2 required for 380-480 Volt/3 Phase; 0.5 Amp
25	70406701	Fuse	1 required for 1 Phase; 2 required for 100-240 Volt/3 Phase; 2 Amp
26	70306901	Fuse Bracket	

© Copyright, Alliance Laundry Systems LLC – DO NOT COPY or TRANSMIT

Accessory Box Harnesses for Electric Models

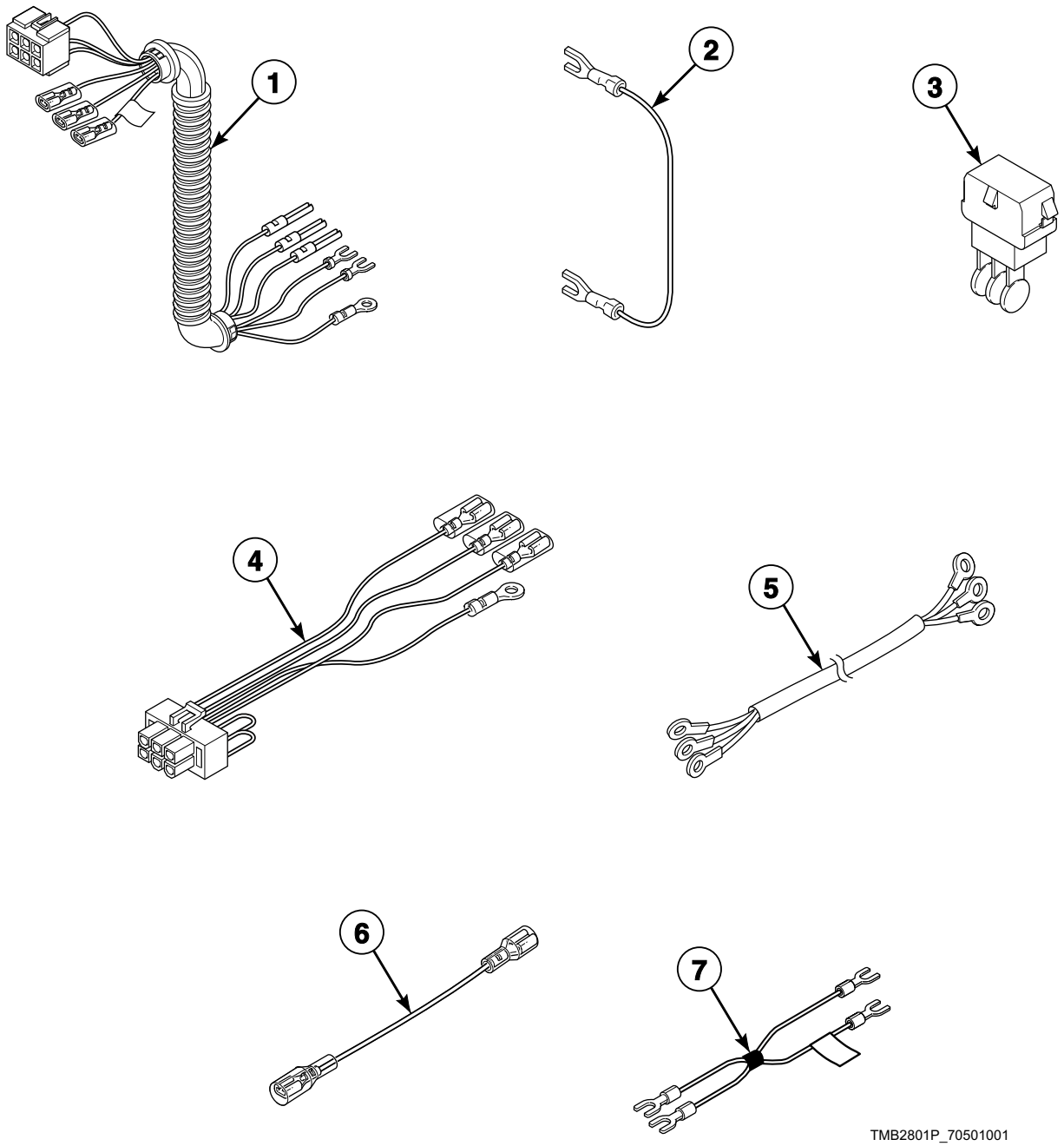

© Copyright, Alliance Laundry Systems LLC – DO NOT COPY or TRANSMIT

Accessory Box Harnesses for Electric Models

REF	PART NO.	DESCRIPTION	COMMENTS
1	70335501P	Electric Power Buss Harness	Models through 2/28/10
	70439601	Electric Power Buss Harness	Models starting 3/1/10
2	M413933	Jumper Cable Assembly	Non-CE models; 8 gauge; 7.5 inches; 2 required for 1 Phase; 3 required for 3 Phase
	M413934	Jumper Cable Assembly	8 gauge; 8 inches; 1 required for 1 Phase; 3 required for 3 Phase
	M414121	Jumper Cable Assembly	CE models; 8 gauge; 6.75 inches; 6 required for 3 Phase models with less than 380 Volts
3	M413863	Network Capacitor Assembly	3L, 3O, 3V, 3X, DO, DV, DX and OM control suffixes
4	70286501	Network Capacitor Harness Assembly	Models through 7/8/12; 3O, 3V, 3X, DO, DV, DX and OM control suffixes
	44152001	Network Capacitor Harness Assembly	Models starting 7/9/12; 3L, 3O, 3V, 3X, DO, DV, DX and OM control suffixes
5	70371301P	Cable Set Heater Assembly	H1-H3
	70371401P	Cable Set Heater Assembly	H4-H6; Models with less than 380 Volts
6	70139001	Jumper Assembly	Non-CE models; 8 gauge; 10 inches; 2 required for 1 Phase; 3 required for 3 Phase models with less than 380 Volts
	70139101	Jumper Assembly	Non-CE models; 8 gauge; 11 inches; 1 Phase
	70138801	Jumper Assembly	CE models; 6 gauge; 8 inches; 3 required for 3 Phase
	70138901	Jumper Assembly	CE models; 2 gauge; 7.5 inches; 2 required for 1 Phase
	44014601	Jumper Wire	CE models; 8 gauge; 6.25 inches; 3 required for 3 Phase models with less than 380 Volts
	44014701	Jumper Wire	CE models; 8 gauge; 10.5 inches; 2 required for 1 Phase; 3 required for 3 Phase models with less than 380 Volts
	44014801	Jumper Wire	CE models; 8 gauge; 13 inches; 3 required for 1 Phase and 3 Phase models with 380 Volts or more
7	70355801P	Electric Contactor Jumper Set Harness	Models with less than 380 Volts

© Copyright, Alliance Laundry Systems LLC – DO NOT COPY or TRANSMIT

Accessory Box for Non-CE Electric Models

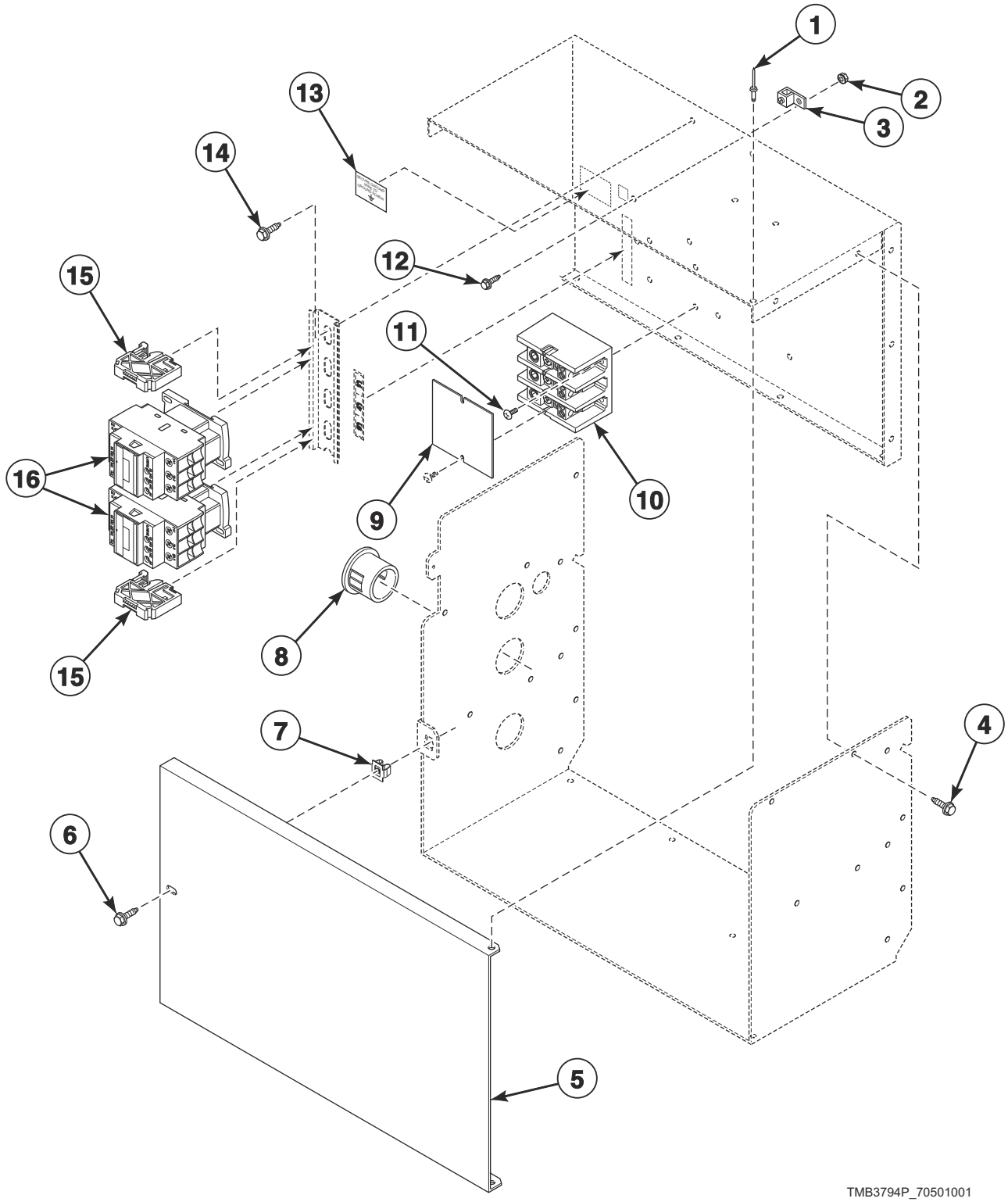

© Copyright, Alliance Laundry Systems LLC – DO NOT COPY or TRANSMIT

Accessory Box for Non-CE Electric Models

REF	PART NO.	DESCRIPTION	COMMENTS
	M413930P	Ferrite Core Assembly	3L, 3O, 3V, 3X, DO, DV, DX and OM control suffixes
	44324001	Warning Label	Extended tumble; Use on item 5
1	70058502	Pop Rivet	2 required
2	44088001	Nut	
3	M411283	Ground Lug Connector	
4	430497	Screw	11 required
5	70358401	Accessory Box Cover	
6	33562	Screw	
7	70030501	Expansion Clip	
8	M402542	Snap Bushing	2 required
9	44014901P	Power Distribution Block Cover	
10	M413865	Power Distribution Block	3 pole
11	39733	Screw	6 required
12	685837	Screw	
13	M403047	Secure Ground Label	
14	51780	Screw	6 required
15	70121001	End Stop	2 required
16	70343301P	Contactor	2 required for models with less than 380 Volts; 1 required for models with 380 Volts or more

© Copyright, Alliance Laundry Systems LLC – DO NOT COPY or TRANSMIT

Accessory Box for CE Electric Models

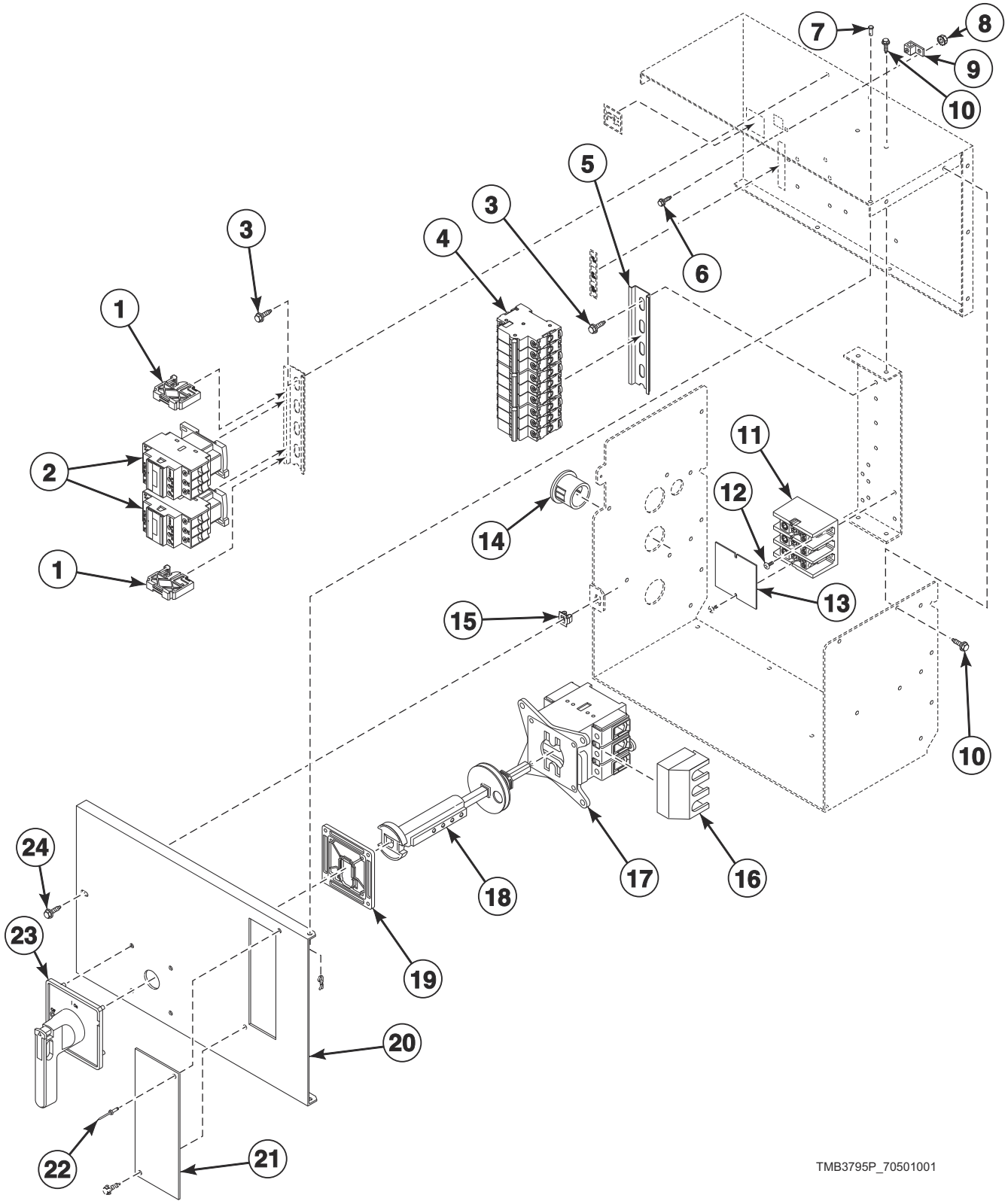

© Copyright, Alliance Laundry Systems LLC – DO NOT COPY or TRANSMIT

Accessory Box for CE Electric Models

REF	PART NO.	DESCRIPTION	COMMENTS
	M413930P	Ferrite Core Assembly	3L, 3O, 3V, 3X, DO, DV, DX and OM control suffixes
	44324001	Warning Label	Extended tumble; Use on item 21
	44314401	Time Delay Interlock Kit	
1	70121001	End Stop	2 required
2	70343301P	Contactor	2 required
3	51780	Screw	14 required
4	M412401	Circuit Breaker	1 Phase
	M412407P	Circuit Breaker	3 Phase
	M412406	Circuit Breaker	1 required for 1 Phase; 2 required for 3 Phase
5	M412693	Din Rail	
6	685837	Screw	
7	70058502	Pop Rivet	2 required
8	44088001	Nut	
9	M411283	Ground Lug Connector	
10	430497	Screw	11 required
11	M413865	Power Distribution Block	3 pole
12	39733	Screw	4 required
13	44014901P	Power Distribution Block Cover	
14	M402542	Snap Bushing	2 required
15	70030501	Expansion Clip	
16	M412367	Finger Guard	Models through 7/31/11
17	M412186	Mounting Switch Base	Models through 7/31/11
18	M412371P	Extension Handle	Models through 7/31/11
19	M412369	Door Interlock	Models through 7/31/11
20	70358402	Accessory Box Cover	
21	70133901	Electrical Box Access Cover	
22	70058501	Pop Rivet	2 required
23	70268001	Handle	Models through 7/31/11
24	33562	Screw	3 required

© Copyright, Alliance Laundry Systems LLC – DO NOT COPY or TRANSMIT

Notes

© Copyright, Alliance Laundry Systems LLC – DO NOT COPY or TRANSMIT

Parts Index

A

Access Panel Trim
70399407 69

Accessory Box Cover
70358401 129
70358402 131

Adapter
70131901 103

Adjustable Buzzer
D505447 21

Air Filter
70036001 107

Airflow Switch and Arm Bracket
70319602 95

Airflow Switch Arm
70319401 95

Airflow Switch Cover
70356601 95
70465701 95

Airflow Switch Vane
70319201 95

Airflow Switch Wrapper
70356101 95

Anti-Rattle Burner Assembly
70546701 97

B

Bearing Housing Bracket
70021401 93

Belt
70276205P 85, 87

Belt Access Cover
70466001 87

Belt Tension Tool Kit
M4853P3 85

Blower Assembly
70359801P 89

Blower Motor
70337501P 89
70342601P 89

Blower Motor Kit
70337601P 89
70337701P 89

Blower Motor Mounting Plate
70349601 89

Bolt
70062401 ..... 85, 87
70467501 87

Bracket
44065901 83
44263501 19
70472601 ..... 111, 115, 119, 121, 125

Bumper Pad
56128 ..... 111, 113

Burner Grill
70188801 97

Burner Orifice
70684100 101
70684110 101
70684112 101
70684114 101
70684116 101
70684125 101
70684126 101
70684127 101
70684128 101
70684130 101
70684132 101
70684133 101
70684134 101
70684136 101
70684138 101
70684140 101
70684142 101

Bushing
44239501 87
70346501 79

Buzzer Kit
M4860P3 17

Bypass Harness
70364103 ..... 17, 19, 23, 29, 37, 43, 51, 53, 55

C

Cable Set Heater Assembly
70371301P 105, 127
70371401P 105, 127

Card Reader and Bracket Assembly
D510068P 37

Card Reader Harness Assembly
70211801 37

Card Reader Network Harness Assembly
70206601 37

Card Reader Overlay
70334201 29
70334301 ..... 29, 51

Center Cylinder Seal
70066004 77

Center Partition
70252601 79

Central Pay Harness
70484601 ..... 27, 41, 49
70491501 19

Central Pay Interface Control Assembly
209/00471/75 19

Circuit Board Support
D501523 83

Circuit Breaker
M412401 131
M412406 131
M412407P 131

Clevis Pin
70389201 107

Coin Box
F160673P 69

Coin Chute Assembly
70296401 69

N/A items do not appear in index.

© Copyright, Alliance Laundry Systems LLC – DO NOT COPY or TRANSMIT

Coin Cover Overlay
70246301 ..... 25, 49
Coin Drop
38963P 31
70256402P 31
70429001 31
70441601P 31
Coin Drop Assembly
CK114 31
210195 31
210196 31
38462P 31
38463 31
38464P 31
38467 31
38472 31
38475 31
38519 31
38521 31
39157 31
44039701P 21
44039702 21
44039703 21
44039704 21
44039705 21
44039706 21
44039707 21
70441602 31
70447301 31
70471601 31
70482401 31
Coin Drop Kit
CK077 31
CK097 31
CK122 33
CK123 31
Coin Identification Paper
38725 31
Coin Vault Assembly
70180101 69
Coin Vault Switch Harness
70364104P 15, 19, 27, 35, 41, 49, 69
Coin Vault Trim
70117501 69
70117502 69
70117504 69
Communication Board
210095P 47
210097 47
Communication Connector
210099 47
Communication Wire Harness Assembly
800246 ..... 39, 45
Compression Spring
70467601 87
Contact Base
F8538101 71
Contact Block
44018701 71
Contact Block Switch
F200233401P 71
Contact Switch
F8069501 71
Contactor
70323701P 111, 113, 119, 121, 125
70343301P 129, 131
Control
44063801P 83
Control Assembly
D511867P 25, 29
D512199P 15
D512202P 17
D513139P 15
D514273P 25, 29
70434101P 53, 55
70437102P 55
70437103P 55
70437104P 55
70437105P 55
70450501P 41, 43
70450502P 49, 51
70450503 ..... 41, 43
70450504 ..... 49, 51
70454001P 53
70454101P 55
70462301P 19
70462302P 19
70462361P 19
70462369 19
70503101P 17
70503702P 55
Control Box Base
44065301 83
Control Box Cover
44065201 83
Control Box Housing
44065101 83
Control Box Top
44065401 83
Control Chassis Mounting Bracket
70357901 ..... 15, 17
Control Door Assembly
70363401 15
Control Harness
70426501P 83
Control Housing Cover
70307002 45
Control Kit
D505905P 35, 37
70228401P 23
Control Overlay
44194801 41
70410001 41
70410002 41
70449501 41
70473001 49
70473002 49
70473003 51
70473301 41
Control Panel
70121501B 63
70121501* 63
70121502 63
70121505* 63
70121507DG 63
70121508 63
70121509 63
70273301* 63
70273302 63
70273303* 63
70273304 63
70273306 63
70273307B 63

N/A items do not appear in index.

© Copyright, Alliance Laundry Systems LLC – DO NOT COPY or TRANSMIT

70273308B 63
70273313 63
70273315LG 63
70273315W 63
Control Panel and Door Hinge Kit
M4774P3 ..... 57, 59, 61, 63
Control Panel Harness
44240301 ..... 53, 55
70315501P 27, 29, 35, 37
70335301P 23
70367001P 17
70368001P 27, 29, 35, 37
70369001 15
70382701P 23
70398401 15
70410401P 41, 43, 49, 51
70485301 19
70489901 19
Control Plate and Studs Assembly
70440901 55
Control Plate Assembly
44040901 21
44041001 21
70175805 23
70175806 23
70175807 ..... 25, 35
70360601 17
70419701 35
70475601 53
70497201 ..... 29, 37, 43, 51
Control Plate Kit
44050701P 19
70291001P 41, 49
Control Set
70370001 15
70370101P 15
70370201P 17
Control Tray
70469201 ..... 111, 113, 119, 121, 125
Control Tray Harness
70464701 ..... 109, 117, 123
Control Trim
44016401 69
70529401 69
70529402 69
Cylinder and Trunnion Assembly
70443801 75
70443802 75
70443803 75
Cylinder Assembly
70372701P 75
70372702P 75
70372703 75
Cylinder Bearing Stud Plate Assembly
430352 77
Cylinder Guide Tool
263P4 77
Cylinder Idler Arm
70259901 85
Cylinder Motor Harness Assembly
70401001 ..... 77, 85
70401101 ..... 77, 85
70439701 ..... 77, 85
70440101 ..... 77, 85
70465801 ..... 77, 87
Cylinder Rib Assembly
70433001 75
Cylinder Shroud
70427301 79
70427302 79

D

Damper and Hinge Exhaust Assembly
70209501 89
Din Rail
M412693 ..... 111, 113, 119, 121, 125, 131
DIN Valve Adapter Kit
F8382301 107
Direct Air Kit
70522701P 97
70522801P 105
Display Assembly
D512218P 17
Door Assembly
44046701 57
44058001P 57
44058004P 57
44287801BP 57
44287801LGP 57
70064100 57
70212200 57
70212300 57
70212301P 57
70212302P 57
70408901P 57
70496501P 57
70496502P 57
70538002 59
Door Glass
M400784P 59
70133601P 59
Door Glass Installation Tool
M4221P4 59
Door Glass Seal Kit
70211901P 59
Door Handle
M400133 59
430117 59
44007902P 59
44057701 59
44263801 59
70538104 59
Door Handle Replacement Kit
70566701 59
Door Hinge
70116003* 61
70116005B 61
70116005LG 61
70116006 61
Door Hinge Lug Assembly
44035001 61
44035002 61
Door Interlock
M412369 131
Door Latch
M401223 69
Door Ring
70505707B 59

N/A items do not appear in index.

© Copyright, Alliance Laundry Systems LLC – DO NOT COPY or TRANSMIT

Door Ring and Handle Assembly
44043501 59
70543907LG 59
Door Ring Assembly
70505709B 59
70505713P 59
70543901 59
70543902 59
70543904B 59
70543905 59
70543907B 59
Door Ring Gasket
70296801 59
Door Switch Actuator Kit
70215001P 61
Double Ended Stud
70334701 85
Drive Access Cover
70196301 89
70202501 85
Drive Motor
70337801P 85
70338101P 85
70459001P 87
Drive Motor Kit
70337901P 85
70338001P 85
Drive Motor Plate
44261401 87
Drive Rivet
M400713 83
Drum Idler Spring
70045301 85
Drywall Screw Magnet Kit
70343101P 75, 77

E

Earth Terminal Sticker
M412096 ..... 113, 115, 121, 125
Elbow
70079601 103
70208701 99
70428101 81
Electric Contactor Jumper Set Harness
70355801P 127
Electric Power Buss Harness
70335501P 127
70439601 127
Electrical Box Access Cover
70133901 131
Electronic Coin Drop Assembly
70294103P 31
70294104 31
70294107 31
70294111 31
70294117 31
70294119 31
70294120 31
70294121 31
70513306 31
70513311 31
Electronic Coin Drop Harness
44065801 31
Electronic Coin Drop Kit
CK099 ..... 31, 33
CK100 33
CK101 33
CK103 33
CK109 33
CK113 33
CK115 33
CK116 33
CK117 33
CK118 33
CK119 33
CK120 33
CK121 33
CK125 33
Electronic Control
44037801P 21
Electronic OPL Control Kit
M4689P3 23
M4695P3 23
Emergency Stop Contact Harness
70364105P 71
Emergency Stop Harness
70364106P 71
Emergency Stop Label
44012901 71
Emergency Stop Pushbutton
F200233500 71
End Cap
70070101 75
70070102 75
End Stop
70121001 ..... 129, 131
Ethernet Gateway Kit
NK320 ..... 41, 43, 49, 51, 53
Exhaust Thimble
70017801 89
Expansion Clip
70030501 ..... 69, 111, 113, 115, 119, 121, 125, 129, 131
Extension Handle
M412371P 131
70342501P 113, 121

F

False Front
70000501*P 67
70000502 67
70000503DG 67
70000503LG 67
70000504 67
70024202P 67
70024203DG 67
70024203LG 67
70024204 67
False Front Assembly
70024201*P 67
Fan Motor Harness Assembly
70401201 89
70401301 89
70439801 89
70440201 89
Fan Spacer
70599301 89

N/A items do not appear in index.

© Copyright, Alliance Laundry Systems LLC – DO NOT COPY or TRANSMIT

Ferrite Core Assembly
M413930P 23, 129, 131
Fill Hose
F200116 83
Fill Hose Kit
38349P 83
Filter
70429401 107
Finger Guard
M412366 ..... 113, 121
M412367 131
Flat Top
70557601 79
Foam Gasket
70414101 ..... 15, 17, 19, 21, 23, 25, 29, 35, 37, 41, 43, 49, 51
Front Panel
70329715DG 65
70329715LG 65
70329716DG 65
70329716LG 65
70329717DG 65
70329718DG 65
70576001DG 65
Front Panel Assembly
44115401*P 65
44115502 65
44115601* 65
44115702 65
44115901 65
44115902 65
44116001* 65
44116102 65
44116201*P 65
44116301 65
44116302 65
70602202W 65
Front Panel Seal
70173401P 65
Fuse
44310001 ..... 111, 115, 119, 121, 125
70406501 ..... 23, 111, 115, 119, 121, 125
70406601 ..... 111, 115, 119, 121, 125
70406701 ..... 111, 115, 119, 121, 125
Fuse Bracket
70306901 ..... 111, 115, 119, 121, 125
70313601 ..... 111, 115, 119, 121, 125
70313602 ..... 111, 115, 119, 121, 125
Fuse Holder
M413544P 111, 115, 119, 121, 125
44155601P 111, 115, 119, 121, 125
Fuse Holder Body
70329401P 111, 115, 119, 121, 125
Fuse Holder Cap
70329501 ..... 111, 115, 119, 121, 125

G

Gas Burner
70229801P 97
Gas Disconnect Harness
70342101 ..... 109, 117
70440501 ..... 109, 117
Gas Line Assembly
70271201 99
Gas Shut-Off Valve
M412562P 103
Gas Valve
44154501P 99
44154502P 99
Gas Valve Bracket
70233301 103
70429801 99
Gas Valve Coil
70260101 103
Gas Valve Coil Kit
44257501 103
Gas Valve Cover
70381001 97
70429901 ..... 97, 99
Gas Valve Harness
70184001 103
Gas Valve Harness Assembly
M413650 103
Gasket
70289101P 73
70392701P 89
Graphic Overlay
44050501 19
44050502 19
44239401 19
44239402 19
44239403 19
44240501 19
Ground Lug Connector
M411283 ..... 129, 131

H

Hairpin Cotter
70389301 107
Handle
70268001 131
Handle and Caps Assembly
70154401 73
70154402 73
Handle Bar
70399502B 59
Handle Bumper
70407205 73
70407207 73
Harness Assembly
M412997 ..... 99, 107
Heat Exchanger
70491801 ..... 97, 105
Heater Element
70034401P 105
70034402P 105
70034403P 105
70034414P 105
70034415P 105
70034416P 105
High Voltage Lead
70006201 109
High Voltage Suppression Cable
44239702 109

N/A items do not appear in index.

© Copyright, Alliance Laundry Systems LLC – DO NOT COPY or TRANSMIT

Hinge Cam Kit
M4772P3 61
M4773P3 61
Hold-Down Clip
35865 79
Hole Plug
44024201 59
70063201 79
Hose
44073304 83
Hose Clamp
36801 83
Hose Fitting
44069101 83

I

ICM Reset Label
70411001 ..... 113, 115
Idler Bracket
70443301 85
Idler Holder
70464501 87
Idler Spacer
70464601 87
Idler Wheel Assembly
70050401P 85, 87
Igniter Cover
70159601 97
Ignition Control
70458601P 111
70483201P 113
Ignition Control Harness
44136601P 109
44186701 109
44186901 109
Ignition Control Kit
70492701 111
Ignition Control Kitl
70492801 113
Insulator
M413862 ..... 111, 113, 119, 121, 125
Interlock Contactor
F330186P 111, 113, 119, 121, 125

J

Jumper Assembly
70138801 127
70138901 127
70139001 127
70139101 127
Jumper Bar
70066501 105
Jumper Cable Assembly
M413933 127
M413934 127
M414121 127
Jumper Calibration Assembly
70084303 23
Jumper Calibration Wire
70324601 ..... 15, 17, 27, 29, 35, 37, 41, 43, 49, 51, 53, 55
Jumper Configuration Assembly
M413507 ..... 109, 117, 123
M413510 ..... 109, 117, 123
Jumper Disconnect Assembly
70120901 ..... 109, 117
Jumper Harness Assembly
M413504 ..... 109, 117
M413505 ..... 109, 117, 123
M413506 ..... 109, 117, 123
M413508 ..... 109, 117, 123
M413509 123
Jumper Strip
M400869 105
Jumper Wire
44014601 127
44014701 127
44014801 127
70066601 105
Junction Box Harness
70315801 ..... 109, 117, 123

K

Key
70144101 89
70155601 69
70155602 69
Kickplate
70117601 73
70117602 73

L

Label
44190901 65
70414001 59
70537001 65
70537101 65
Leveling Leg
34319 79
Leveling Leg Locknut Wrench
205655 79
Light
801431 15
801432 83
Limit Thermostat
M409443 105
M410542 97
M411307 89
70299001 97
Lint Panel
70515402 73
70515403LG 73
70515403W 73
70515404 73
70515404DG 73
70515405 73
70515406W 73
Lint Panel Assembly
70176601*P 73
70176602P 73
70176604 73

N/A items do not appear in index.

© Copyright, Alliance Laundry Systems LLC – DO NOT COPY or TRANSMIT

70176605* 73
70176606 73
70176607* 73
70176608 73
70176609* 73
70176610 73
70176611* 73
70176612 73
Lint Panel Switch Bracket
70277301 79
Lint Screen
70325601 79
Lint Screen Clip
70054501 79
Lock Shim
70342401 69
Lock, Key and Nut Kit
70722301 69
70733701 ..... 69, 83
Lower Pan
70332401P 79
Lower Rear Panel
70290101 89
L.P. Conversion Kit
K555 103
M4703P3 ..... 99, 103
M4706P3 99
L.P. Valve
44154504 ..... 99, 103
70457302P 103
L.P. Valve Conversion Kit
M405434 103

M

Main Harness
70441301 ..... 17, 23, 27, 29, 41, 43, 53, 55
70467801 ..... 15, 17, 23, 27, 29, 35, 37, 41, 43, 49, 51, 53, 55
Male Tab Terminal
00177 ..... 15, 17, 21
Manual Reset Thermostat
M411945 89
70186301 97
Membrane Switch
D510036P 25, 29, 35, 37
M414368P 23
44037901P 21
44039402P 21
Mixing Valve
36958P 83
Mixing Valve Shield Bracket
44065701 83
Moisture Sensor Harness Assembly
70448902 91
Moisture Sensor Test Wires
70468901 91
Motor Bracket
70464101 87
Motor Capacitor
M410296 85
70211401 85
70211501 89
70211502 85
Motor Channel
70261701 85
Motor Conduit Mounting Bracket
70321701 ..... 85, 89
Motor Contactor Harness
44142601P 109, 117, 123
70320201 ..... 109, 117, 123
70469301 ..... 109, 117, 123
Motor Mount Bracket
70127301 85
Motor Plate Cover
70464201 87
Motor Pulley
70284202 85
70284204 85
70457401 87
70457403 87
Mounting Bracket
70063501 23
Mounting Plate
70208801 ..... 29, 37, 43, 51
Mounting Switch Base
M412186 131
M412187P 113, 121

N

Nameplate
B12389801 69
F8443102 69
39564 ..... 25, 41
44046801 69
44062901 69
44129902 69
70243901 69
70509601 69
70522001 69
Nameplate Bezel
70117401 69
Nameplate Overlay
44104501 69
44144401 ..... 59, 69
70115601 69
70380701 69
70410201 69
70411401 69
70460801 69
Network Board
210157P 47
Network Board Assembly
201341 45
210016P 39
Network Cable
210165 47
Network Capacitor Assembly
M413863 ..... 109, 117, 123, 127
Network Capacitor Harness Assembly
M413878 ..... 109, 117, 123
44143401P 109, 117, 123
44152001 127
70286501 127
Network Controller Kit
NK220 ..... 41, 43, 53

N/A items do not appear in index.

© Copyright, Alliance Laundry Systems LLC – DO NOT COPY or TRANSMIT

Network Plug Support
70201401 39
Network Retrofit Kit
NK206 ..... 41, 43, 53
Network Wire Harness Assembly
44088501P 45
800217 39
Nozzle Bracket
70424201 81
70428601 81
Nut
F431025 87
M400022 ..... 77, 89, 93
M400033 91
M400977 69
M404993 79
M412986 ..... 77, 85, 87
M414215 59
21899 79
23951 73
24205 ..... 15, 17
27222 ..... 85, 87
29786 15
29787 ..... 17, 19, 21
29796 85
430576 79
44071201 59
44087201 75
44088001 ..... 129, 131
44088801 69
51236 73
56156 85
70054 ..... 15, 17, 23, 25, 29, 35, 37, 41, 49, 53, 55, 59, 105
70466601 87
N.G. Valve
44154503 ..... 99, 103
70457301P 103

O

Opto Coupler
200674P 31
Orifice Adapter
70379301 99
Orifice Holder Bracket
70248901 99
Orifice Keeper Bracket
70249001 99
O-Ring
431482 103
Output Bracket
44223101 55
70440601 53
Output Harness
44186101 ..... 53, 55
Overlay
44130002 23
44144301 35
44144302 35
44147801 35
44149301 37
70115801 23
70128701 23
70129501 25
70129601 25
70130401 23
70130601 23
70184301 35
70184302 35
70184401 37
70257701 25
70257702 25
70257703 29
70258001 25
70258002 25
70258003 29
70258101 25
70259001 25
70261001 25
70261002 25
70261003 29
70261201 25
70261202 25
70286701 25
70321001 25
70362201 17
70362202 17
70362401 17
70362402 17
70362501 17
70362502 17
70362901 15
70363001 15
70410003 43
70432201 53
70445001 55
70445002 55
70445003 55
70445004 55
70453001 25
70453002 25
70453101 29
70462401 55
70462402 55
70462701 55
70462901 55
70462902 55
70472201 55
70472202 55
70472401 55
70472402 55
70491901 25
70491902 25
70491903 29
70493701 55
70493702 55
70494001 17
70494002 17
70499001 53
70504501 49
70504502 49
70504503 51
70504601 49
70504602 49
70504603 51
70504701 17
70504702 17
70504901 55
70504902 55
70505201 25
70505202 25
70505203 29
70508601 55

N/A items do not appear in index.

© Copyright, Alliance Laundry Systems LLC – DO NOT COPY or TRANSMIT

70508602 55
70508701 25
70509701 29
70510501 25
70510601 25
70510701 25
70510801 25
70510901 25
70511001 29
70526001 55
70526002 55
70537401 25
70537402 25
70537403 29

P

Panel Locator
56079 ..... 17, 69, 73
PC Board Standoff
210098 47
Pin
70071401 61
Pipe Clip
70203701 97
Pipe Nipple
70139601 103
901403 103
Pop Rivet
M405750 99
44166601 69
70058501 ..... 61, 79, 107, 131
70058502 ..... 129, 131
70126301 73
70126401 73
70412601 59
Porcelain Touch-Up Paint
122P4P 79
215P4P 79
370P4P 79
Power Distribution Block
M413865 ..... 129, 131
Power Distribution Block Cover
44014901P 129, 131
Power Harness
70316101P 109, 117, 123
70332201 ..... 109, 117, 123
70347701P 109, 117, 123
70438901 ..... 109, 117, 123
70439001 ..... 109, 117, 123
70445501 ..... 109, 117, 123
70464901 ..... 109, 117, 123
70465001 ..... 109, 117, 123
70469701 ..... 109, 117, 123
Primary Air Adjustment Sleeve
70239801 ..... 99, 103
Pushbutton
44018801 71
Pushbutton Switch
M413431 115
70413301 ..... 25, 29, 35, 37, 41, 43, 49, 51, 69
Push-to-Start Switch
801434W 83

R

RC Filter Kit
M4457P3 23
Rear Bearing Shim
70355001 77
Rear Cylinder Bearing Housing
70013901 77
Rear Cylinder Channel
70257301 75
70257302 75
Rear Cylinder Channel Plate
70257401 75
Rear Cylinder Seal
70013702 77
Rear Cylinder Seal Support
70506401 77
Rear Lint Panel
70320001 73
Relay
M412534 ..... 21, 23
Relay/Buzzer Bracket
44041701 21
Replacement Door Handle Kit
70133501P 57, 59
Replacement Gas Valve Kit
M4969P3 99
M4971P3 99
Reversing Contactor Harness
70465301 ..... 109, 117, 123
Reversing Control Assembly
70469901 ..... 111, 115, 119, 121, 125
Reversing Control Board Harness
70471901 ..... 109, 117, 123
Rocker Switch
70455101 ..... 15, 17
70461301 17
Roller and Seal Kit
70616701 79
Roller Catch Arm
70030301 73
Roller Catch Spacer
70030201 73
Roller Catch Wheel
70297601 73
Roller Seal
70443601 79
Roller Shaft
70249501 79
Roller Support Bracket
70328301 79
Rotation Sensor
F8066201 93
Rotation Sensor Bracket
44044401 93
Rotation Sensor Cover
44044301 93
Rotation Sensor Harness
F8066401 93
70476101 93
Rotation Sensor Kit
7009P 93

N/A items do not appear in index.

© Copyright, Alliance Laundry Systems LLC – DO NOT COPY or TRANSMIT

S

Screw
D501086 ..... 115, 119, 121, 125
D501524 ..... 15, 17, 25, 29, 35, 37, 41, 43, 49, 51, 53, 55
D503661 45
F430116 87
F8206901 ..... 111, 115, 119, 121, 125
F8368701 87
M400056 85
M400057 87
M400661 59
M402797 ..... 21, 23
M402917 ..... 111, 113, 119, 121, 125
M405188 97
M409385 59
M411072 ..... 89, 111, 113, 119, 121, 125
05161 97
23222 ..... 85, 89, 103
33562 ..... 129, 131
38272 ..... 111, 113
39733 ..... 69, 73, 129, 131
430497 ..... 39, 45, 69, 75, 79, 81, 83, 85, 87, 89, 95, 97, 99, 103, 105, 111, 113, 119, 121, 125, 129, 131
430648 85
430756 59
430757 73
431484 103
44349101 61
51780 ..... 81, 83, 111, 113, 119, 121, 125, 129, 131
51782 ..... 113, 115, 121
51783 ..... 111, 113, 119, 125
61199 59
62588 75
685837 ..... 129, 131
70033502 61
70069901 ..... 15, 17, 53
70072801 73
70126101 89
70132301 73
70153301 93
70391101 75
70407301 61
70442101 61
70566401 85

Secure Ground Label
M403047 ..... 111, 113, 115, 119, 121, 129

Sensor Harness
70426601P 83

Shadow Box Clip
M400972 69

Shaft Collar
70467001 87

Sheet Metal Edge Gasket
70015709 79
70015710 79

Side Panel
70021502LG 79
70021502*P 79
70021504DG 79
70253801DG 79
70253801LG 79
70253801*P 79

Sleeve
44050601 19

Slip Ring Assembly
44222702 91

Slip Ring Holder
44224401 91

Slot Card Plate Assembly
44089501 ..... 29, 43, 51

Snap Bushing
M400770 99
M402542 ..... 129, 131
70178701 83

Solenoid Valve DIN Connector
70370301P 107

Spacer
70471701 87

Spark Electrode
70032801P 97
70548701P 97

Spray Nozzle
70427801 81

Spray Nozzle Hose
70427701 81

Spray Paint
286P4 79
297P4 79
298P4P 79
381P4 79
382P4 79

Spud Adapter
70223501 103

Standoff
211/00119/00 19

Steam Coil
70369101P 107

Steam Configuration Harness
70322401P 117

Steam Filter Holder
70369301 107

Steam Solenoid
70351011P 107
70351012 107

Steam Stove Limit Bypass Harness
70389901 107

Steam Valve
F8322902 107
F8322903 107

Steam Valve Harness Bracket
70369401 107

Steam Valve Rebuild Kit
70351021P 107

Steam Valve Wiring Cover
70369501 107

Stove Back
70297401 97

Stove Connectors Cover
70365201 105

Stove Grill
70214901 105

Stove Limit Bypass Harness
70316601 ..... 105, 107

Stove Limit Harness
70316501 97

Stove Limit Kit
M4902P3 97

N/A items do not appear in index.

© Copyright, Alliance Laundry Systems LLC – DO NOT COPY or TRANSMIT

Stove Partition
70357201 105
Stove Top and Sides
70333401 97
Street Elbow
H86070034 99
Support Bearing
70448701 77
Support Housing Bearing Assembly
430260P 77
Support Rod
70464401 87
Switch
70411901 95
Switch Assembly
70413401 79
Switch Bracket
70356301 95
Switch Hole Plug
44057801LG 69
44057801Q 69
44057801W 69

T

Temperature Knob
44104601 ..... 15, 17
Temperature Selector Bracket
70350201 15
Temperature Selector Switch
D511711 ..... 15, 17
Temperature Selector Switch Bracket
70391701 17
Terminal Block
430642 ..... 111, 113, 119, 121, 125
Terminal Block Shield
70333001 ..... 111, 113, 119, 121, 125
Thermistor
M414704 89
44064701 ..... 81, 83
Thermistor Plate
70424401 81
Thermostat Cover
M414477 97
Time Delay Interlock Kit
44314401 131
Top Pan
70555301 79
Transformer
M414228P 111, 113, 119, 121, 125
M414229P 111, 113, 119, 121, 125
M414230P 111, 119, 125
M414312P 111, 119, 125
44074401 ..... 119, 121, 125
Trunnion and Seal Kit
70564801 75
70564802 75
Tube Assembly
70427601 81
Tumbler Dolly Kit
M4379P4 79

U

Union
H86000031 103
Union Tee
70427901 81
Upper Rear Panel
70356701 77
70356702 77
70356703 77
70356704 77
USB Gateway Kit
NK330 ..... 41, 43, 53
USB IR Interface Kit
203346 ..... 41, 43, 49, 51, 53, 55

V

Valve Coil
F8514801 107
Valve Kit
F8521701 107
Valve Rebuild Kit
F8379502 107

W

Warning Label
44324001 ..... 113, 115, 125, 129, 131
70534301 65
Washer
F431131 89
M400080 75
M400991 77
M405535 ..... 15, 87
70261401 79
70265901 85
70270301 85
70409301 59
70411301 75
Wire Clip
70366201 ..... 111, 113, 119, 121, 125
Wire Guard
201595P 31
Wireless Network Kit
NK301 ..... 41, 43, 49, 51, 53
Wireless Transceiver Assembly
202335 45

N/A items do not appear in index.

© Copyright, Alliance Laundry Systems LLC – DO NOT COPY or TRANSMIT

Notes

© Copyright, Alliance Laundry Systems LLC – DO NOT COPY or TRANSMIT