Tumble Dryer

200 Pound Capacity

15 Digit Model Numbers with 2 in 12th Position

Refer to Page 5 for Model Numbers

Parts

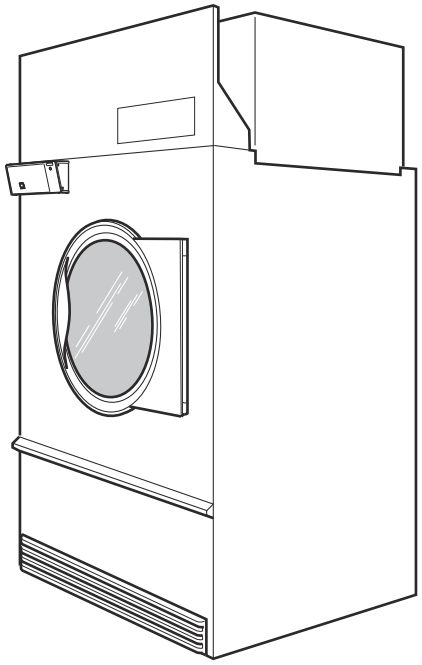

TMB1268C_70574101

Alliance™ Laundry Systems

www.alliancelaundry.com

Part No. 70574101R9
December 2024

Table of Contents

Title	Page
Parts Ordering Information	3
Serial Plate Location	3
Model Identification	5
Product Overview - Heat Source and Voltage	6
Product Overview - Control Suffixes (Drawing 1 of 2)	8
Product Overview - Control Suffixes (Drawing 2 of 2)	10
Interior Control Box	12
Exterior Control Box - RQ Control Suffix (Drawing 1 of 2)	14
Exterior Control Box - RQ Control Suffix (Drawing 2 of 2)	16
DX4 Control Box - B Models with R3 Control Suffix	18
Exterior Control Box - RE Control Suffix (Drawing 1 of 2)	20
Exterior Control Box - RE Control Suffix (Drawing 2 of 2)	22
Exterior Control Box - RU Control Suffix	24
Fire Suppression System Control Box	26
Cabinet Front Components	28
Cabinet Front Panel	30
Cabinet Front Panels and Nameplates	32
Door Assembly	34
Door Components	36
Hinge Components	38
Lint Panel Components	40
Lint Panel Switch Assembly	42
Lint Screen and Drive Guard	44
Cylinder and Trunnion Assembly	46
Trunnion Bearings	48
Drive Sheave, Step Pulley and Belts	50
Cylinder Drive Motor	52
Moisture Sensing Components	54
Fan Assembly	56
Fan Motor Assembly	58
Airflow Switch	60
Gas Heater Components	62
Burner Orifices for Non-CE and Non-Australian Gas Models	64
Steam Heater Components - Except B, C and I Models	66
Steam Heater Components - B, C and I Models	68
Steam Solenoid Valve	70
Rotation Sensor	72
Control Tray Wrap Components	74
Control Tray Fuses	76
Control Tray Harnesses	78
Control Tray Components for Gas Models	80

© Copyright 2024, Alliance Laundry Systems LLC

All rights reserved. No part of the contents of this book may be reproduced or transmitted in any form or by any means without the expressed written consent of the publisher.

Control Tray Components for Steam Models 82
Parts Index 85

© Copyright, Alliance Laundry Systems LLC – DO NOT COPY or TRANSMIT

Parts Ordering Information

If literature or replacement parts are required, contact the source from whom the machine was purchased or contact Alliance Laundry Systems at (920) 748-3950 for the name and address of the nearest authorized parts distributor.

For technical assistance, call the number listed below:

(920) 748-3121 Ripon, Wisconsin

Serial Plate Location

When calling or writing about your product, be sure to mention model and serial numbers. Model and serial numbers are located on serial plate(s) as shown.

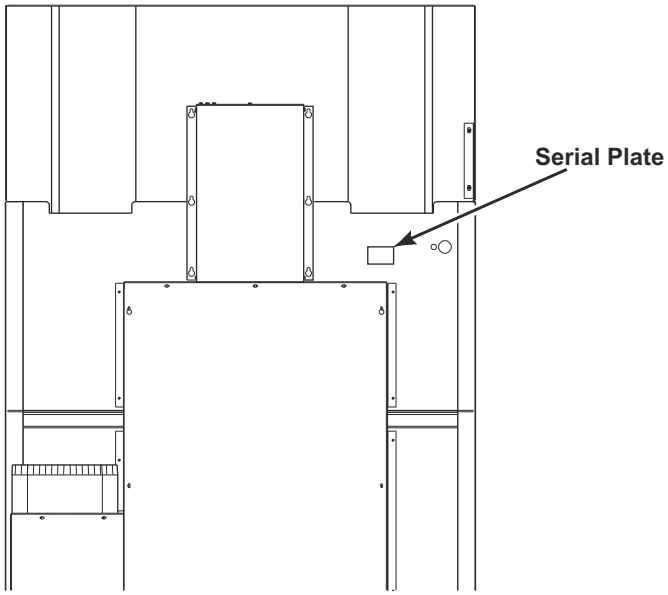

TMB3212P_70574101

© Copyright, Alliance Laundry Systems LLC – DO NOT COPY or TRANSMIT

Notes

© Copyright, Alliance Laundry Systems LLC – DO NOT COPY or TRANSMIT

Model Identification

Information in this manual is applicable to these tumble dryer models:

BA200L
BA200N
BH200L
BH200N
BH200S
BK200N
BT200L
BT200N
BT200S
BT200T
BU200L
BU200N
BU200S
BU200T
CA200L
CA200N
CK200N
CT200L
CT200N
CT200S
CT200T
CU200L
CU200N
CU200S
CU200T

GA200L
GA200N
GH200L
GH200N
GH200S
GK200N
GT200L
GT200N
GT200S
GT200T
GU200L
GU200N
GU200S
GU200T
HA200L
HA200N
HH200L
HH200N
HH200S
HK200N
HT200L
HT200N
HT200S
HT200T
HU200L
HU200N
HU200S
HU200T

IT200L
IT200N
IT200S
IT200T
KA200L
KA200N
KK200N
KT200L
KT200N
KT200S
KT200T
KU200L
KU200N
KU200S
KU200T

LA200L
LA200N
LT200L
LT200N
LT200S
LT200T
LU200L
LU200N
LU200S
LU200T
NH200L
NH200N
NH200S
NT200L
NT200N
NT200S
NU200L
NU200N
NU200S

PA200L
PA200N
PH200L
PH200N
PH200S
PT200L
PT200N
PT200S
PT200T
PU200L
PU200N
PU200S
PU200T
SA200L
SA200N
SH200L
SH200N
SH200S
SK200N
ST200L
ST200N
ST200S
ST200T
SU200L
SU200N
SU200S
SU200T

UA200L
UA200N
UH200L
UH200N
UH200S
UK200N
UT200L
UT200N
UT200S
UT200T
UU200L
UU200N
UU200S
UU200T

© Copyright, Alliance Laundry Systems LLC – DO NOT COPY or TRANSMIT

Product Overview - Heat Source and Voltage

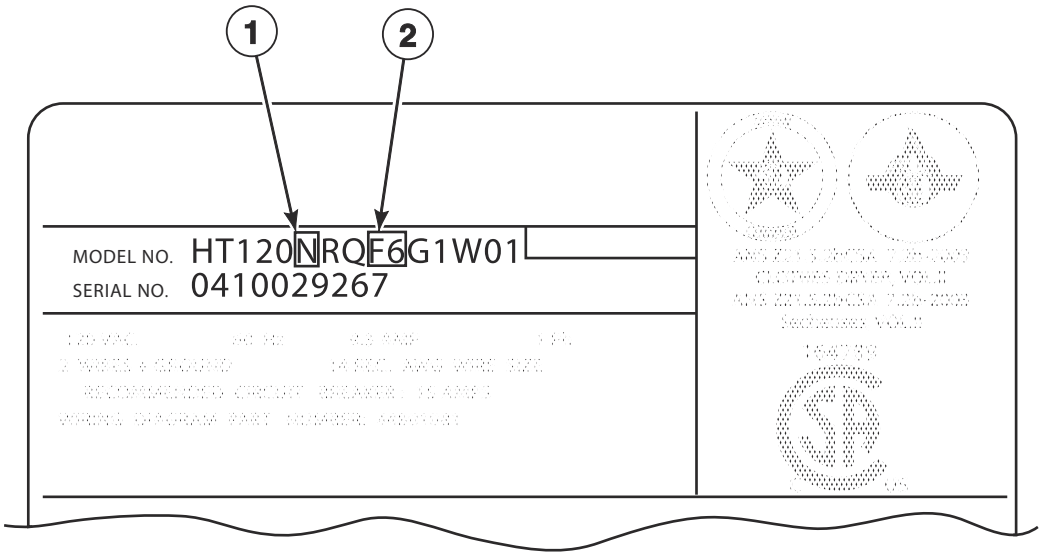

TMB2907P_70574101

© Copyright, Alliance Laundry Systems LLC – DO NOT COPY or TRANSMIT

Product Overview - Heat Source and Voltage

REF	PART NO.	DESCRIPTION	COMMENTS
1	-	Heat Source	L: Liquid Petroleum Gas (L.P.) N: Natural Gas (N.G.) S: Steam T: Thermal Oil
2	-	Voltage	F6: 200-208 or 240 Volt/60 Hertz/3 Phase J5: 230 Volt/50 Hertz/3 Phase J8: 240 Volt/60 Hertz/3 Phase M1: 380 Volt/50 Hertz/3 Phase M2: 380 or 400-415 Volt/50 Hertz/3 Phase M3: 380 Volt/60 Hertz/3 Phase N1: 400-415 Volt/50 Hertz/3 Phase P1: 440 Volt/60 Hertz/3 Phase Q1: 460-480 Volt/60 Hertz/3 Phase Q2: 480 Volt/60 Hertz/3 Phase

© Copyright, Alliance Laundry Systems LLC – DO NOT COPY or TRANSMIT

Product Overview - Control Suffixes (Drawing 1 of 2)

All Models Except G and K Models

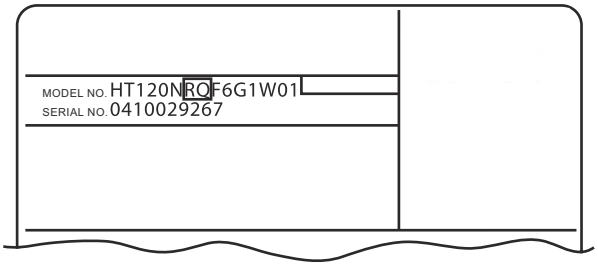

1

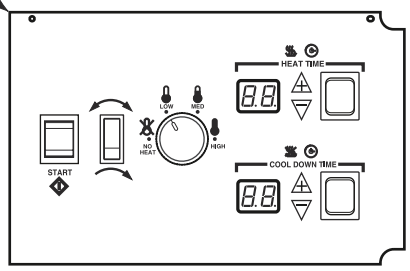

RQ Control Suffixes

2

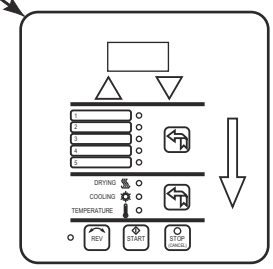

RD Control Suffixes

3

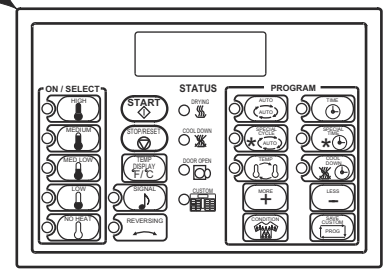

RM Control Suffixes

4

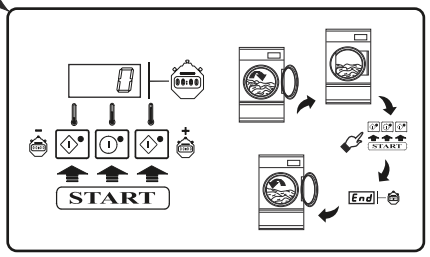

R3 Control Suffixes

5

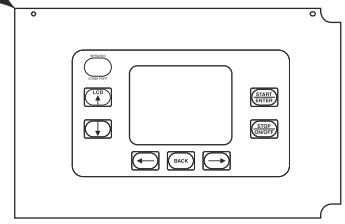

RU Control Suffix

6

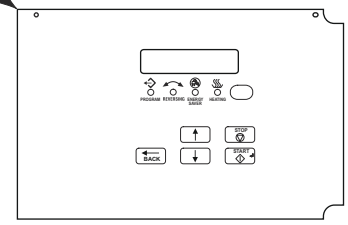

RE Control Suffix

7

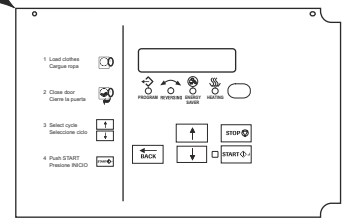

RE Control Suffix

8

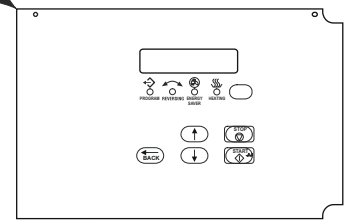

RE Control Suffix

9

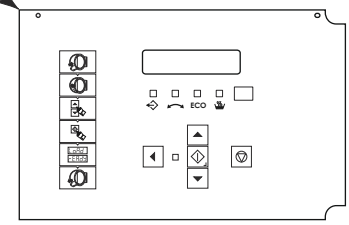

RE Control Suffix

10

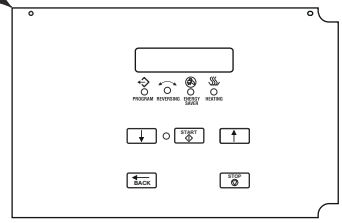

RE Control Suffix

11

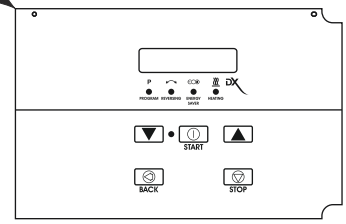

RE Control Suffix

12

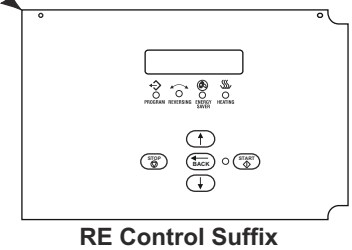

RE Control Suffix

13

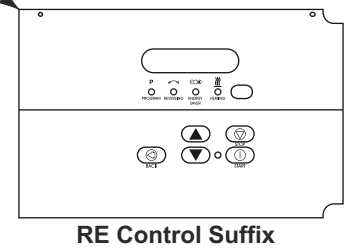

RE Control Suffix

TMB3355P_70574101

© Copyright, Alliance Laundry Systems LLC – DO NOT COPY or TRANSMIT

Product Overview - Control Suffixes (Drawing 1 of 2)

REF	PART NO.	DESCRIPTION	COMMENTS
1	-	Control - Reversing	RQ: reversing dual digital timer
2	-	Control - Reversing	RD: reversing DMP OPL
3	-	Control - Reversing	RM: reversing OPL micro
4	-	Control - Reversing	R3: reversing DX4 OPL
5	-	Control - Reversing	U models; RU: reversing UniLinc OPL
6	-	Control - Reversing	S models; RE: reversing LED OPL
7	-	Control - Reversing	H models; RE: reversing LED OPL
8	-	Control - Reversing	U models; RE: reversing LED OPL
9	-	Control - Reversing	B, C and I models; RE: reversing LED OPL
10	-	Control - Reversing	P models; Models through 9/30/14; RE: reversing LED OPL
11	-	Control - Reversing	P models; Models starting 10/1/14 through 5/31/15; RE: reversing LED OPL
12	-	Control - Reversing	N models; L models through 5/31/15; RE: reversing LED OPL
13	-	Control - Reversing	L and P models; Models starting 6/1/15; RE: reversing LED OPL

NOTE: OPL models have the following control suffixes: R3, RD, RE, RM, RQ and RU.

© Copyright, Alliance Laundry Systems LLC – DO NOT COPY or TRANSMIT

Product Overview - Control Suffixes (Drawing 2 of 2)

G and K Models

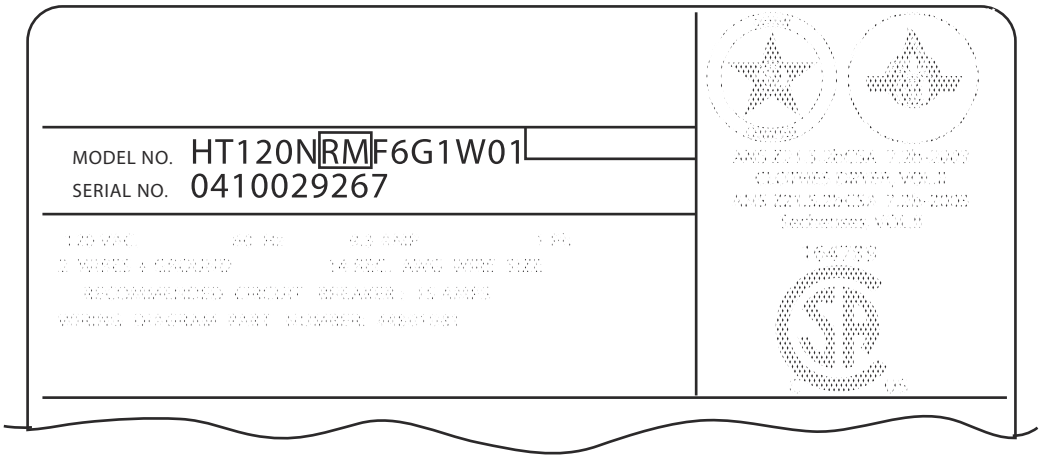

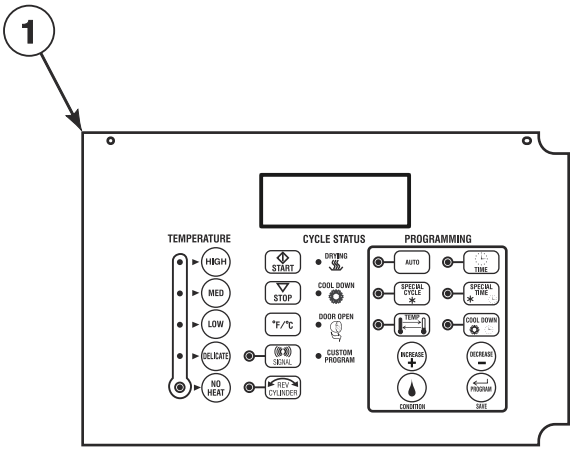

RM Control Suffixes

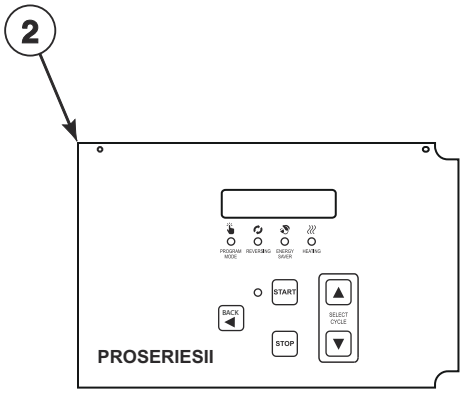

RE Control Suffix

TMB3145P_70574101

© Copyright, Alliance Laundry Systems LLC – DO NOT COPY or TRANSMIT

Product Overview - Control Suffixes (Drawing 2 of 2)

REF	PART NO.	DESCRIPTION	COMMENTS
1	-	Control - Reversing	RM: reversing OPL micro
2	-	Control - Reversing	RE: reversing LED OPL

NOTE: OPL models have the following control suffixes: RE and RM.

© Copyright, Alliance Laundry Systems LLC – DO NOT COPY or TRANSMIT

Interior Control Box

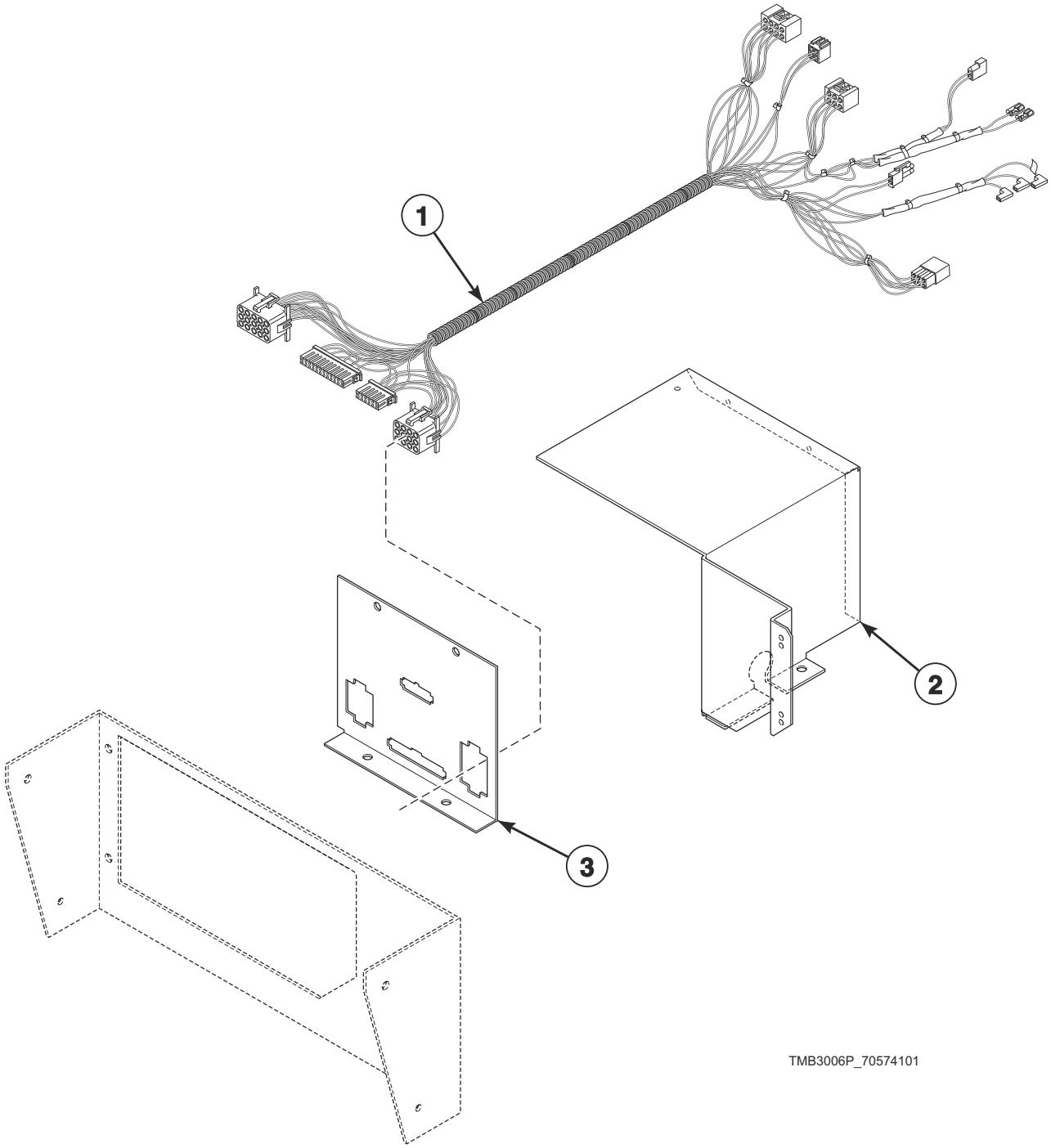

© Copyright, Alliance Laundry Systems LLC – DO NOT COPY or TRANSMIT

Interior Control Box

REF	PART NO.	DESCRIPTION	COMMENTS
1	44251501	Main Harness	Gas models
	44226901	Main Harness	Steam models
2	44161001	Control Box	
3	44161101	Control Housing Cover	

© Copyright, Alliance Laundry Systems LLC – DO NOT COPY or TRANSMIT

Exterior Control Box - RQ Control Suffix (Drawing 1 of 2)

C, G, H, I, K, L, N, P, S and U Models

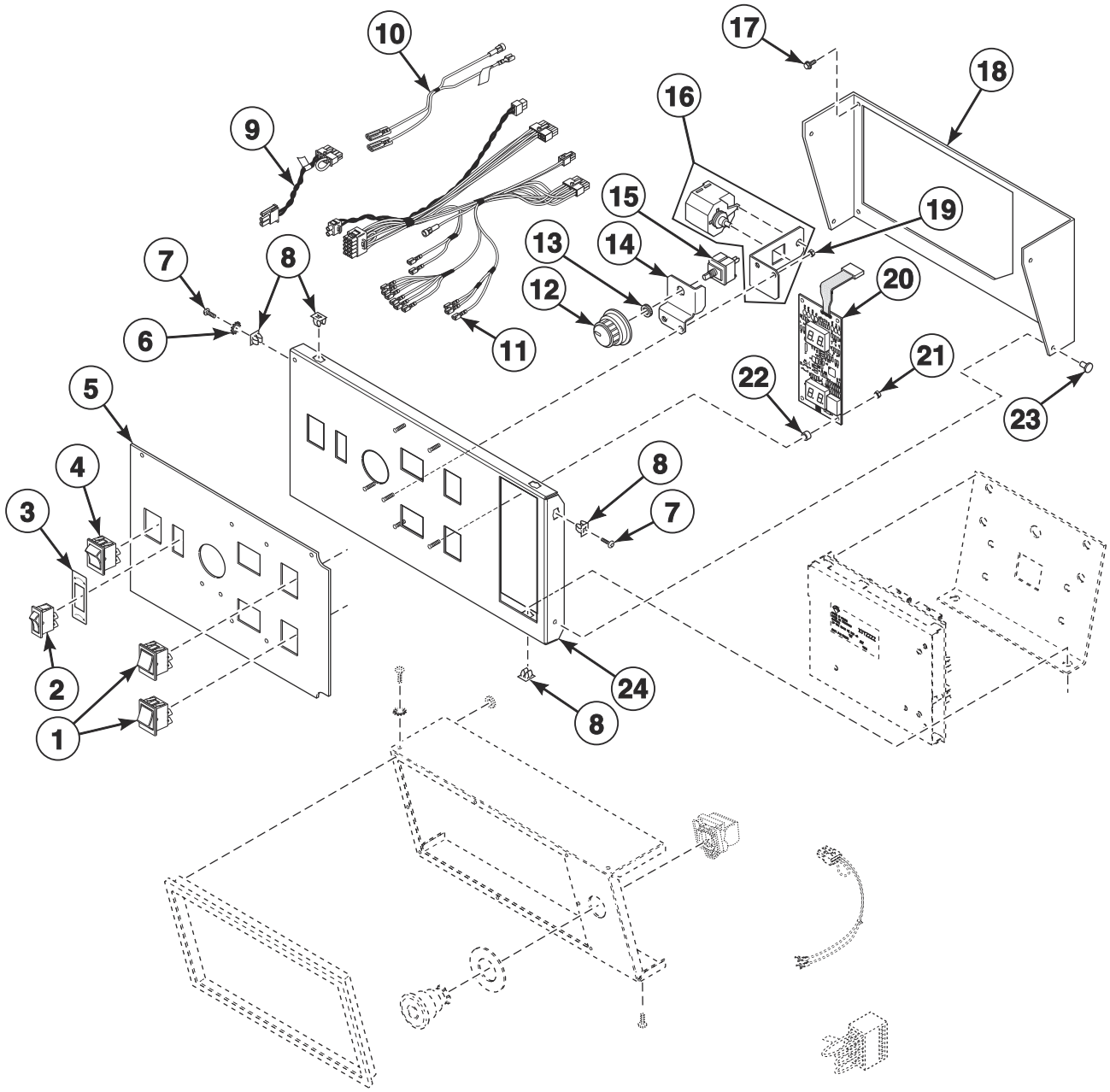

TMB3295P_70574101

© Copyright, Alliance Laundry Systems LLC – DO NOT COPY or TRANSMIT

Exterior Control Box - RQ Control Suffix (Drawing 1 of 2)

REF	PART NO.	DESCRIPTION	COMMENTS
	M4795P3W	Security Cover Kit	
1	70461301	Rocker Switch	2 required
2	44099601	Rocker Switch	Reversing
3	M413236	Switch Plate	Reversing
4	70455101	Rocker Switch	Start
5	70362202	Overlay	G, K, L, N and S models; C and I models through 7/14/14; U models through 8/17/14; P models starting 1/15/15
	70504702	Overlay	C and I models starting 7/15/14; Reversing
	70494002	Overlay	U models; Models starting 8/18/14
	70362502	Overlay	H models
	70362402	Overlay	P models through 1/14/15
6	03815	Washer	
7	800930	Screw	
8	70030501	Expansion Clip	6 required
9	70324604	Jumper Calibration Wire	
10	44100101P	Control Harness	Jumper
11	70367001P	Control Panel Harness	
12	44104601	Temperature Knob	
13	24205	Nut	
14	70391701	Temperature Selector Switch Bracket	
15	D511711	Temperature Selector Switch	
16	M4860P3	Buzzer Kit	Includes bracket, buzzer and wire harness
17	430497	Screw	
18	44099501*	Control Mounting Bracket	
	44099504LG	Control Mounting Bracket	U models; Light gray
	44099502	Control Mounting Bracket	Stainless steel; Models through 3/31/15
	44099505	Control Mounting Bracket	Stainless steel; Models starting 4/1/15
19	70054	Nut	2 required
20	D512218P	Display Assembly	C and I models through 7/14/14; All other models
	70503101P	Control Assembly	C and I models starting 7/15/14
21	29787	Nut	4 required
22	56079	Panel Locator	4 required
23	M400713	Drive Rivet	2 required
24	44099201	Control Plate and Studs Assembly	Includes studs

*** Add Letter To Designate Color. Q - Bisque W - White**

© Copyright, Alliance Laundry Systems LLC – DO NOT COPY or TRANSMIT

Exterior Control Box - RQ Control Suffix (Drawing 2 of 2)

C, G, H, I, K, L, N, P, S and U Models

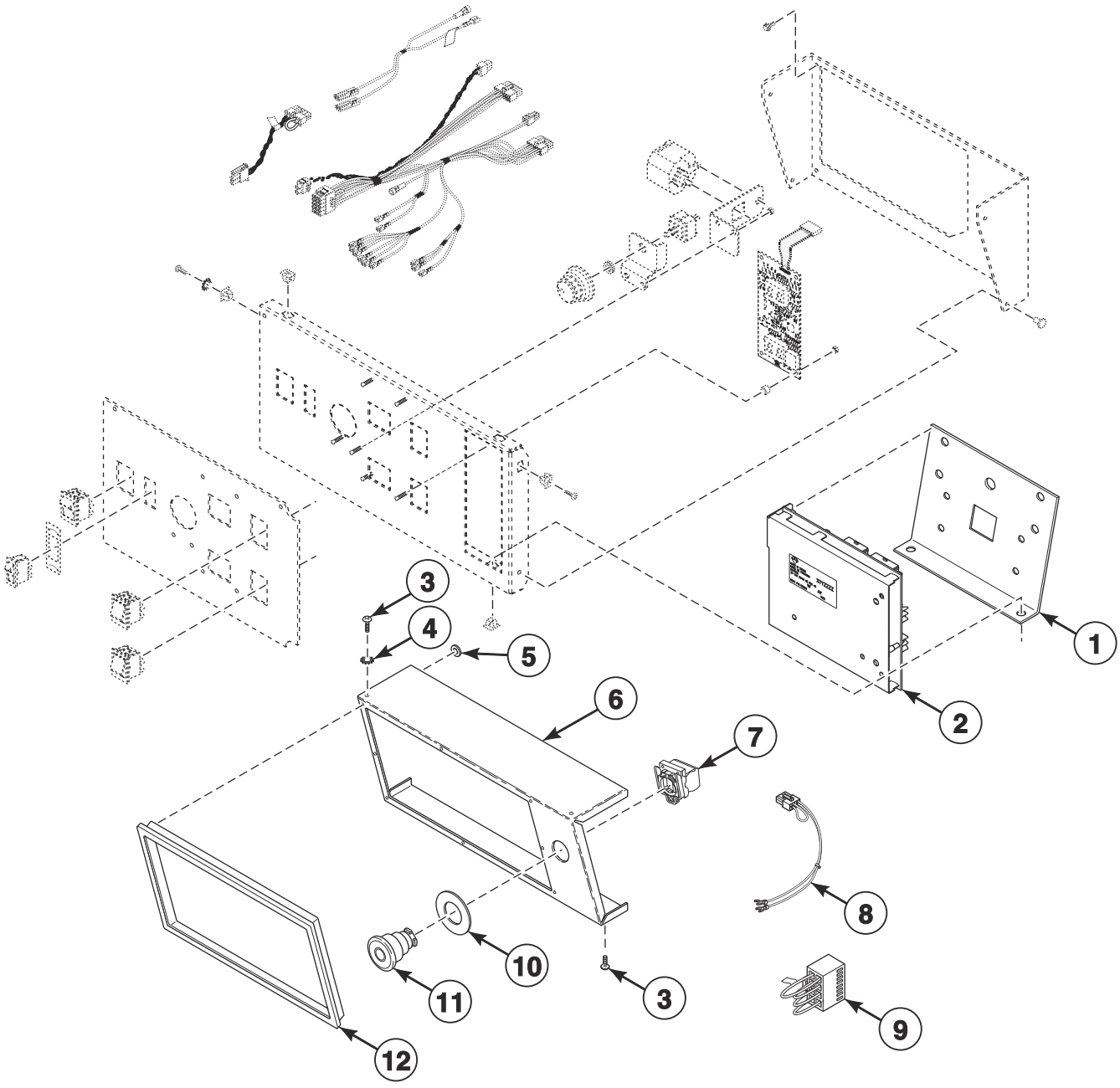

TMB3295PA_70574101

© Copyright, Alliance Laundry Systems LLC – DO NOT COPY or TRANSMIT

Exterior Control Box - RQ Control Suffix (Drawing 2 of 2)

REF	PART NO.	DESCRIPTION	COMMENTS
	M4795P3W	Security Cover Kit	
1	70357901	Control Chassis Mounting Bracket	
2	D512202P	Control Assembly	
3	800930	Screw	
4	03815	Washer	
5	M400977	Nut	
6	44013307*	Control Cover	Non-CE models
	44111713LG	Control Cover	Non-CE and non-Australian U models; Light gray
	44013317	Control Cover	Non-CE models; Stainless steel
	44013311*	Control Cover	CE models
	44111714LG	Control Cover	CE U gas models; Light gray
	44111715LG	Control Cover	CE U steam models; Light gray
	44111716LG	Control Cover	Australian U models; Light gray
	44013319	Control Cover	CE models; Stainless steel
7	F200233400	Contact Block Switch	CE models; Models through 8/17/14
	F8069501	Contact Switch	CE models; Models starting 8/18/14
	F8538101	Contact Base	CE models; Models starting 8/18/14
8	70364105P	Emergency Stop Contact Harness	CE models; 1 contact
	70364106P	Emergency Stop Harness	CE models; 2 contacts
9	70364103	Bypass Harness	Non-CE models
10	44012901	Emergency Stop Label	CE models
11	F200233500	Emergency Stop Pushbutton	CE models
12	44016401	Control Trim	N, S and U models; Black
	44016402	Control Trim	H models; Gray

*** Add Letter To Designate Color. Q - Bisque W - White**

© Copyright, Alliance Laundry Systems LLC – DO NOT COPY or TRANSMIT

DX4 Control Box - B Models with R3 Control Suffix

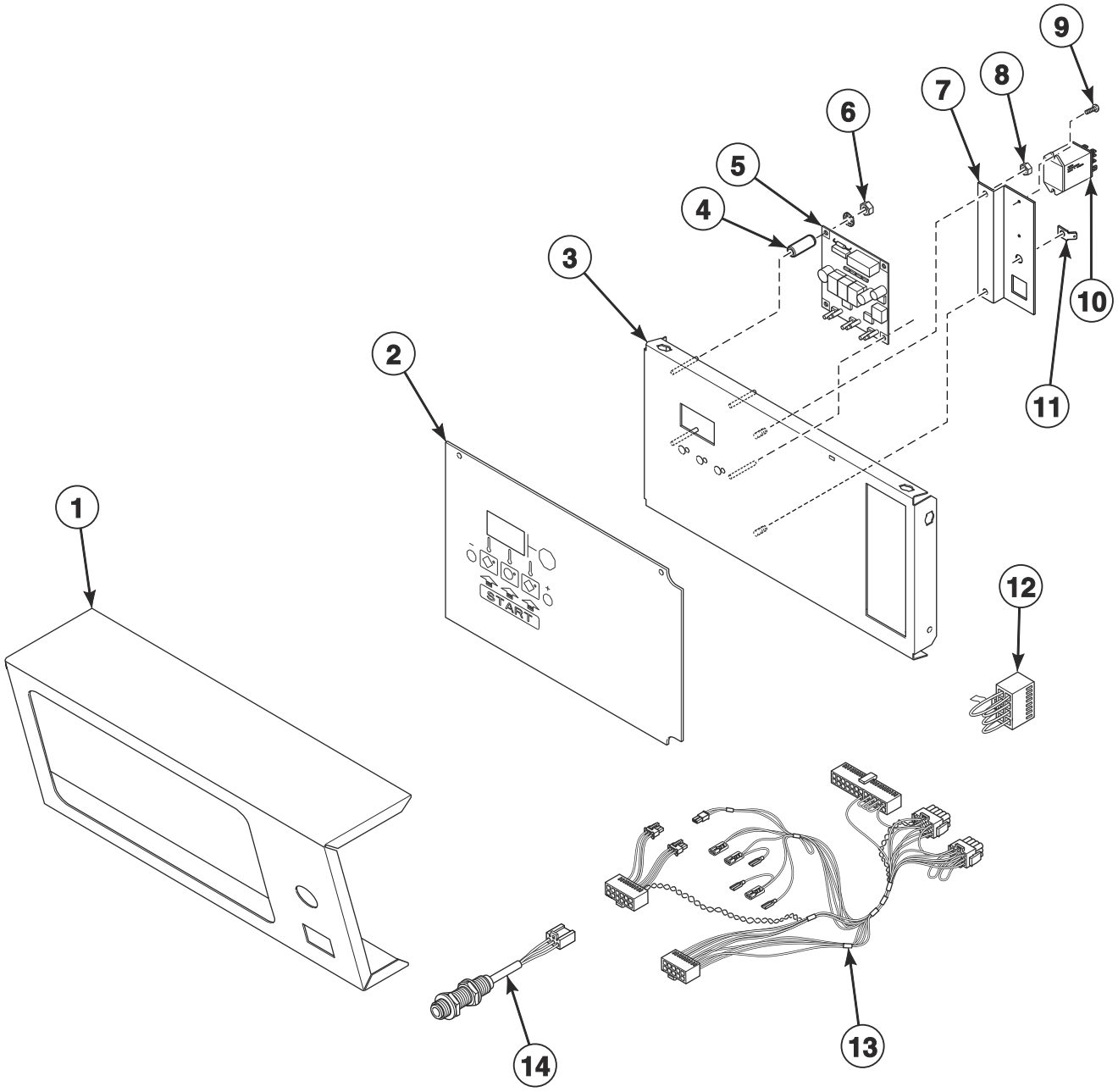

TMB3801P_70574101

© Copyright, Alliance Laundry Systems LLC – DO NOT COPY or TRANSMIT

DX4 Control Box - B Models with R3 Control Suffix

REF	PART NO.	DESCRIPTION	COMMENTS
	M413930P	Ferrite Core Assembly	Use with item 11
1	44111701*	Control Cover	Non-CE models
	44111717	Control Cover	Non-CE models; Stainless steel
	44111705*	Control Cover	CE models
	44111719	Control Cover	CE models; Stainless steel
2	44240501	Graphic Overlay	
3	44038601	Control Plate Assembly	CE models
4	44050601	Sleeve	4 required
5	70462307P	Control Assembly	
6	29787	Nut	4 required
7	44041701	Relay/Buzzer Bracket	
8	70054	Nut	
9	D501086	Screw	
10	M412534	Relay	CE models
11	00177	Male Tab Terminal	
12	70364103	Bypass Harness	Non-CE models
13	70485301	Control Panel Harness	Non-CE and non-Australian models
	70489901	Control Panel Harness	CE and Australian models
14	7010P	Rotation Sensor Kit	

*** Add Letter To Designate Color. Q - Bisque W - White**

© Copyright, Alliance Laundry Systems LLC – DO NOT COPY or TRANSMIT

Exterior Control Box - RE Control Suffix (Drawing 1 of 2)

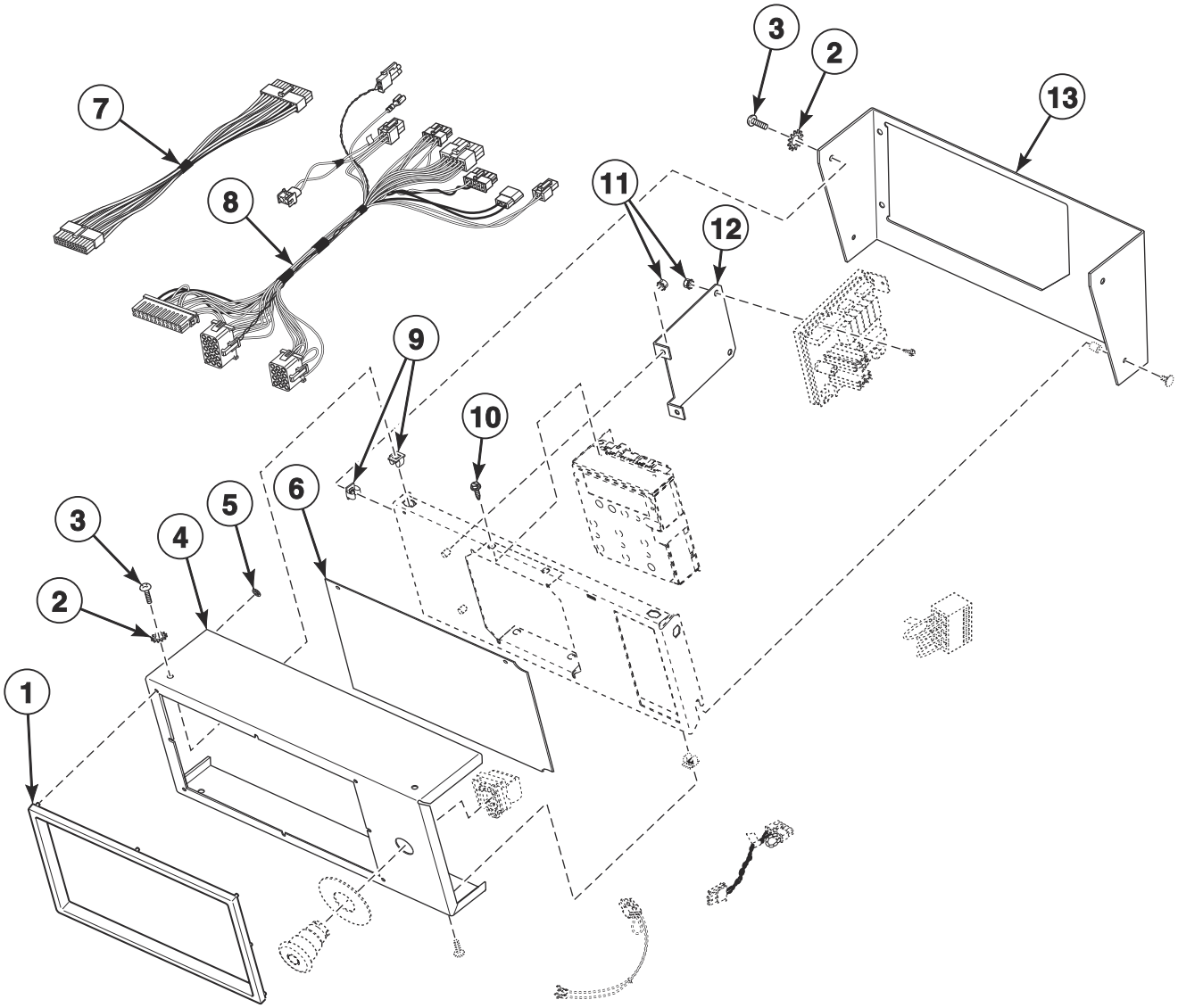

TMB3296P_70574101

© Copyright, Alliance Laundry Systems LLC – DO NOT COPY or TRANSMIT

Exterior Control Box - RE Control Suffix (Drawing 1 of 2)

REF	PART NO.	DESCRIPTION	COMMENTS
	203346	USB IR Interface Kit	
1	44016401	Control Trim	L, N, P, S and U models; Black
	44016402	Control Trim	H models; Gray
2	03815	Washer	2 required
3	800930	Screw	6 required
4	44013315DG	Control Cover	Non-CE P models starting 10/1/14; Dark gray
	44111713LG	Control Cover	Non-CE U models; Light gray
	44013307*	Control Cover	Non-CE P models through 9/30/14; All other non-CE models
	44013308	Control Cover	Non-CE models through 3/31/15; Stainless steel
	44013317	Control Cover	Non-CE models starting 4/1/15; Stainless steel
	44013316DG	Control Cover	CE P models starting 10/1/14; Dark gray
	44111715LG	Control Cover	CE U models; Light gray
	44013311*	Control Cover	CE P models through 9/30/14; All other CE models
	44013319	Control Cover	CE models; Stainless steel
5	M400977	Nut	
6	70445002	Overlay	S models
	70445004	Overlay	H models
	70462401	Overlay	B, C and I models; Models through 7/14/14
	70504901	Overlay	B, C and I models; Models starting 7/15/14
	70462701	Overlay	U models; Models through 8/17/14
	70493701	Overlay	U models; Models starting 8/18/14
	70462901	Overlay	G and K models
	70472401	Overlay	P models through 9/30/14
	70508601	Overlay	P models starting 10/1/14 through 5/31/15; L models starting 1/29/15 through 5/31/15
	70472201	Overlay	N models; L models through 1/28/15
	70526001	Overlay	L and P models starting 6/1/15
7	44186101	Output Harness	Use between control assemblies
8	44240301	Control Panel Harness	Goes from control assembly to main harness
9	70030501	Expansion Clip	6 required per control plate
10	D501524	Screw	
11	70054	Nut	
12	44223101	Output Bracket	
13	44099504DG	Control Mounting Bracket	P models starting 10/1/14; Dark gray
	44099504LG	Control Mounting Bracket	U models; Light gray
	44099501W	Control Mounting Bracket	P models through 9/30/14; All other models
	44099502	Control Mounting Bracket	All models except P models through 3/31/15; Stainless steel
	44099505	Control Mounting Bracket	All models except P models starting 4/1/15; Stainless steel

*** Add Letter To Designate Color. Q - Bisque W - White**

© Copyright, Alliance Laundry Systems LLC – DO NOT COPY or TRANSMIT

Exterior Control Box - RE Control Suffix (Drawing 2 of 2)

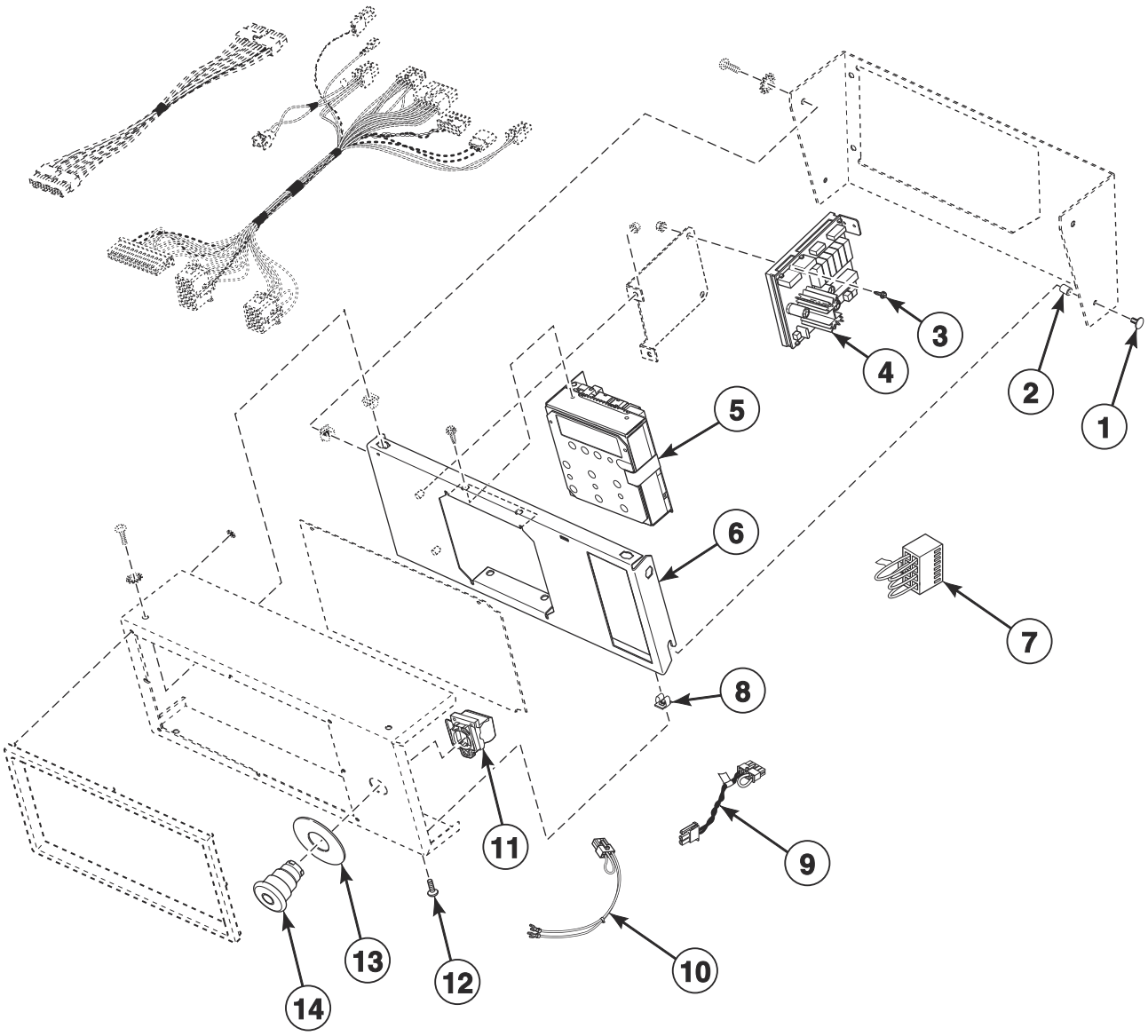

TMB3296PA_70574101

© Copyright, Alliance Laundry Systems LLC – DO NOT COPY or TRANSMIT

Exterior Control Box - RE Control Suffix (Drawing 2 of 2)

REF	PART NO.	DESCRIPTION	COMMENTS
1	430725	Pop Rivet	2 required
2	431264	Spacer	2 required
3	D501524	Screw	
4	70434101P	Control Assembly	
5	70454101P	Control Assembly	H, S and U models; L and P models starting 6/1/15
	70437102P	Control Assembly	B, C and I models; Models through 7/14/14
	70503702P	Control Assembly	B, C and I models; Models starting 7/15/14
	70437103P	Control Assembly	P models through 5/31/15; L models starting 1/29/15 through 5/31/15
	70437104P	Control Assembly	G and K models
	70437105P	Control Assembly	N models; L models through 1/28/15
6	44185701	Control Plate and Studs Assembly	
7	70364103	Bypass Harness	Non-CE models
8	70030501	Expansion Clip	6 required per control plate
9	70324604	Jumper Calibration Wire	
10	70364106P	Emergency Stop Harness	CE models; 2 contacts
11	F200233400	Contact Block Switch	CE models; Models through 8/17/14
	F8069501	Contact Switch	CE models; Models starting 8/18/14
	F8538101	Contact Base	CE models; Models starting 8/18/14
12	800930	Screw	6 required
13	44012901	Emergency Stop Label	CE models
14	F200233500	Emergency Stop Pushbutton	CE models

© Copyright, Alliance Laundry Systems LLC – DO NOT COPY or TRANSMIT

Exterior Control Box - RU Control Suffix

U Models

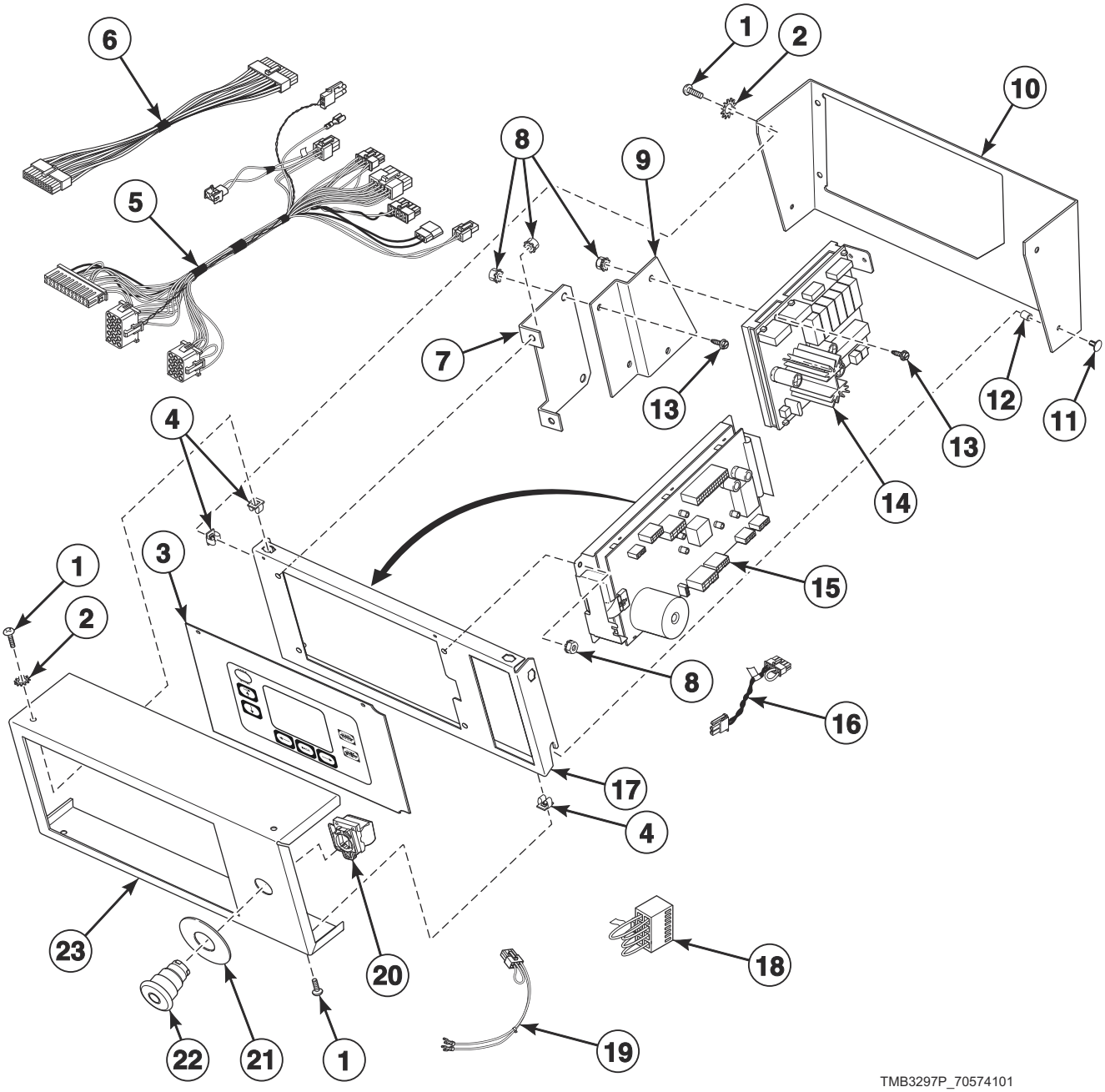

© Copyright, Alliance Laundry Systems LLC – DO NOT COPY or TRANSMIT

Exterior Control Box - RU Control Suffix

REF	PART NO.	DESCRIPTION	COMMENTS
	NK209	Network Retrofit Kit	Wired
	NK220	Network Controller Kit	Wired
	NK309	Wireless Network Kit	Wireless
	NK320	Ethernet Gateway Kit	Wireless
	NK330	USB Gateway Kit	Wireless
	203346	USB IR Interface Kit	
1	800930	Screw	6 required
2	03815	Washer	2 required
3	70432201	Overlay	Models through 8/17/14
	70499001	Overlay	Models starting 8/18/14
4	70030501	Expansion Clip	6 required per control plate
5	44240301	Control Panel Harness	Goes from item 15 to main harness
6	44186101	Output Harness	Use between item 14 and item 15
7	44223201	Output Bracket	
8	70054	Nut	
9	44223401	Output Bracket	
10	44099501W	Control Mounting Bracket	Models through 8/17/14
	44099504LG	Control Mounting Bracket	Models starting 8/18/14; Light gray
	44099502	Control Mounting Bracket	Models through 3/31/15; Stainless steel
	44099505	Control Mounting Bracket	Models starting 4/1/15; Stainless steel
11	430725	Pop Rivet	2 required
12	431264	Spacer	2 required
13	D501524	Screw	
14	70434101P	Control Assembly	
15	70454001P	Control Assembly	
16	70324604	Jumper Calibration Wire	
17	44224601	Control Plate Assembly	
18	70364103	Bypass Harness	Non-CE models
19	70364106P	Emergency Stop Harness	CE models; 2 contacts
20	F200233400	Contact Block Switch	CE models; Models through 8/17/14
	F8069501	Contact Switch	CE models; Models starting 8/18/14
	F8538101	Contact Base	CE models; Models starting 8/18/14
21	44012901	Emergency Stop Label	CE models
22	F200233500	Emergency Stop Pushbutton	CE models
23	44013307*	Control Cover	Non-CE models; Models through 8/17/14
	44111701*	Control Cover	Non-CE models; Models starting 8/18/14
	44111713LG	Control Cover	Non-CE models; Models starting 8/18/14
	44013308	Control Cover	Non-CE models; Models through 3/31/15; Stainless steel
	44013317	Control Cover	Non-CE models; Models starting 4/1/15; Stainless steel
	44013311*	Control Cover	CE models; Models through 8/17/14
	44111705*	Control Cover	CE steam models; Models starting 8/18/14
	44111703*	Control Cover	CE gas models; Models starting 8/18/14
	44111715LG	Control Cover	CE models; Models starting 8/18/14
	44013319	Control Cover	CE models; Stainless steel

*** Add Letter To Designate Color. Q - Bisque W - White**

© Copyright, Alliance Laundry Systems LLC – DO NOT COPY or TRANSMIT

Fire Suppression System Control Box

B, C, G, H, I, K, L, P, S and U Models
Models with a C, D or Y in the 11th Character

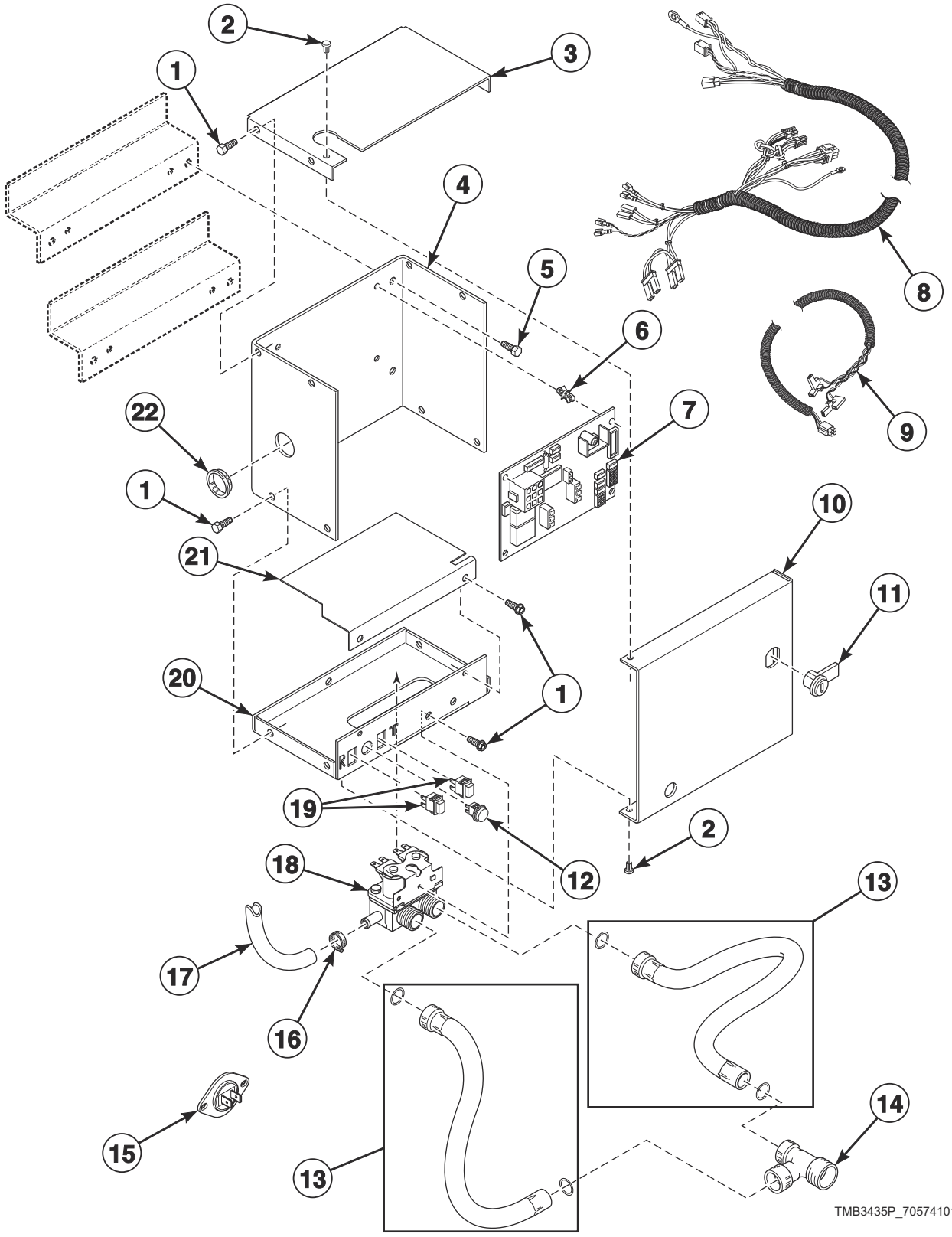

© Copyright, Alliance Laundry Systems LLC – DO NOT COPY or TRANSMIT

Fire Suppression System Control Box

REF	PART NO.	DESCRIPTION	COMMENTS
	44079603	Manifold	
1	430497	Screw	
2	M400713	Drive Rivet	
3	44065401	Control Box Top	Top
4	44065101	Control Box Housing	
5	51780	Screw	
6	D501523	Circuit Board Support	4 required
7	44063801P	Control	
8	44162601	Control Harness	
9	44166801	Sensor Harness Assembly	
10	44065201	Control Box Cover	
11	44089301P	Lock, Key and Nut Kit	RL001 key code
	70155601	Key	RL001
12	801432	Light	Red
13	F200116	Fill Hose	Non-CE and non-Australian models; 2 required
	38349P	Fill Hose Kit	CE and Australian models
14	44069101	Hose Fitting	Non-CE and non-Australian models
15	44064701	Thermistor	2 required
16	36801	Hose Clamp	
17	44073303	Hose	31 inches; Outlet hose
18	36958P	Mixing Valve	
19	801434W	Push-to-Start Switch	2 required
20	44065301	Control Box Base	
21	44065701	Mixing Valve Shield Bracket	
22	70178701	Snap Bushing	

© Copyright, Alliance Laundry Systems LLC – DO NOT COPY or TRANSMIT

Cabinet Front Components

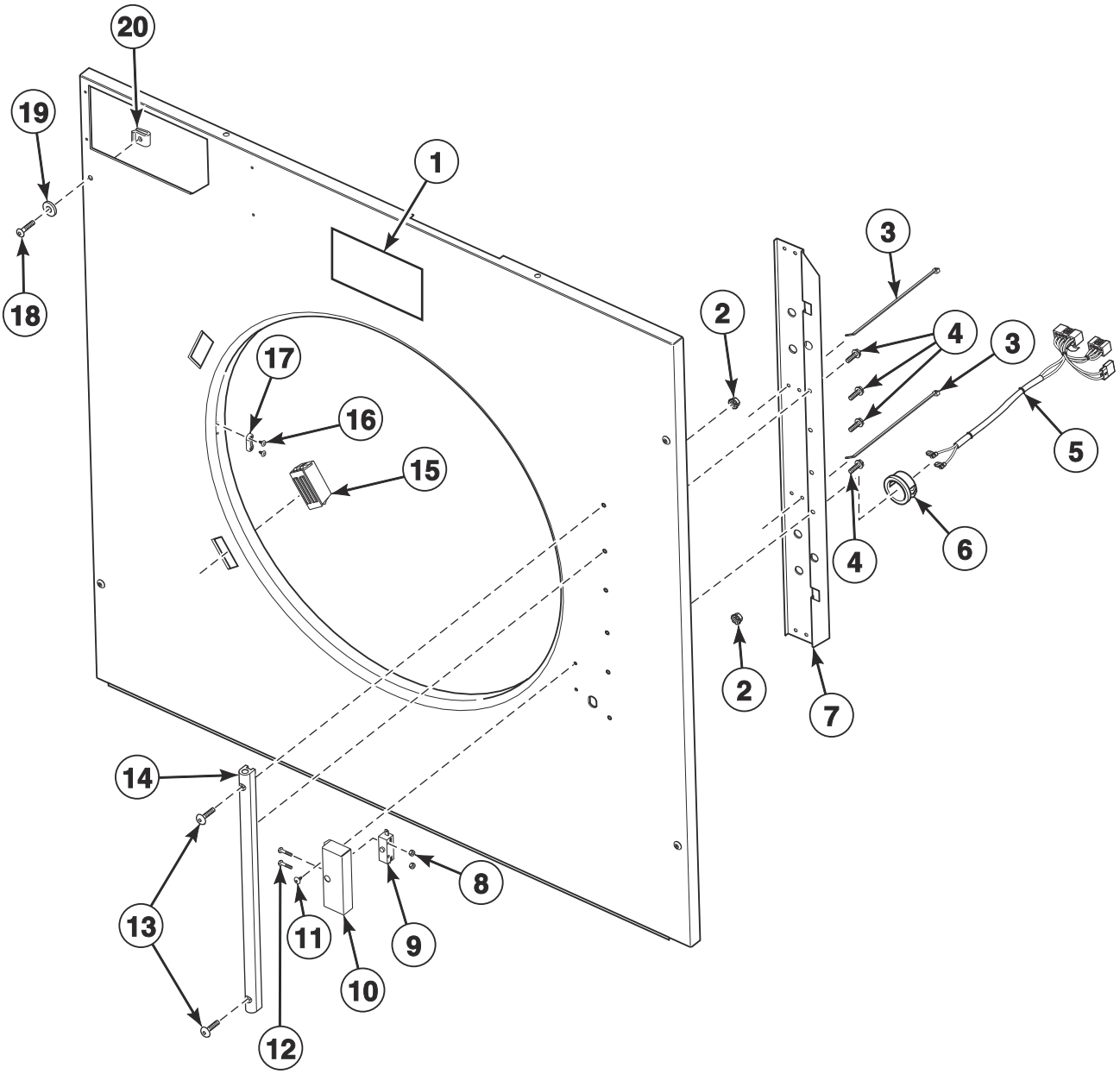

TMB3291P_70574101

© Copyright, Alliance Laundry Systems LLC – DO NOT COPY or TRANSMIT

Cabinet Front Components

REF	PART NO.	DESCRIPTION	COMMENTS
	298P4P	Spray Paint	White
	381P4	Spray Paint	Bisque
	382P4	Spray Paint	Cream
	122P4P	Porcelain Touch-Up Paint	White
	370P4P	Porcelain Touch-Up Paint	Bisque
1	70537001	Label	B, C, H, I, S and U models; C.A.R.E.
	70537101	Label	G and K models; F.S.S.
	44190901	Label	L and P models; Safe Tech
2	29786	Nut	2 required
3	55881	Harness Strap	2 required; Front panel harness to door switch wire channel
4	44023301	Screw	4 required
5	44227101	Door Switch Harness	
6	M400770	Snap Bushing	Required for door switch harness going through frame
7	44231401	Door Switch Harness Channel	
8	02788	Nut	2 required
9	44018201	Door Switch	
10	44001301	Door Switch Cover	
11	431287	Screw	2 required
12	M402574	Screw	2 required
13	70033504	Screw	2 required
14	44035001	Door Hinge Lug Assembly	C, H, L, N, P, S and U models; Includes bushings
	44035002	Door Hinge Lug Assembly	B, G, I and K models; Black
15	44220501	Door Latch Magnet	
16	44166601	Pop Rivet	2 required
17	M401223	Door Latch	
18	70182601	Screw	4 required per panel
19	800465	Washer	4 required per panel
20	70030401	Nut	Access and front panel attachment

© Copyright, Alliance Laundry Systems LLC – DO NOT COPY or TRANSMIT

Cabinet Front Panel

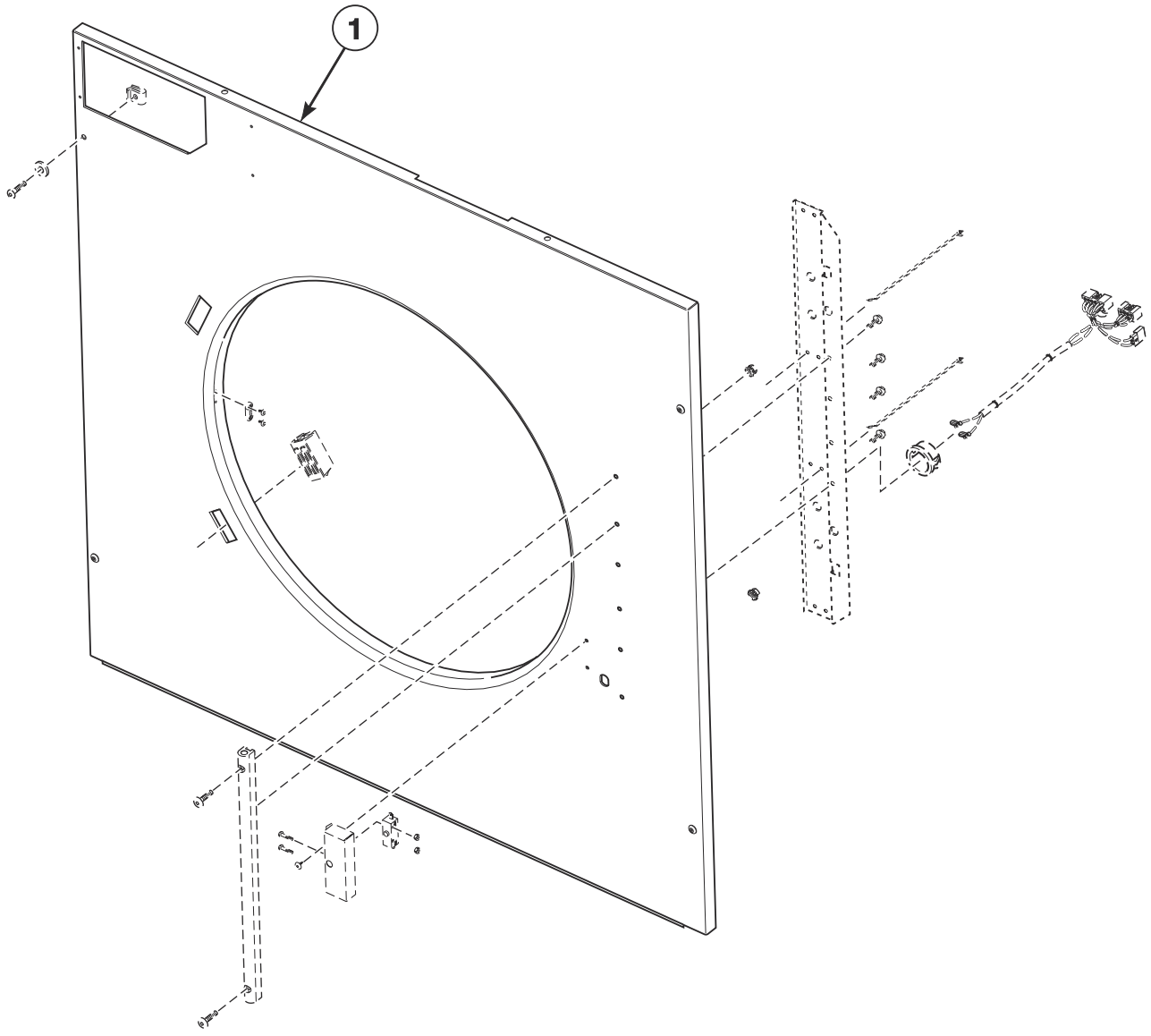

TMB3291PA_70574101

© Copyright, Alliance Laundry Systems LLC – DO NOT COPY or TRANSMIT

Cabinet Front Panel

REF	PART NO.	DESCRIPTION	COMMENTS
1	44078103	Front Panel	G and K models; Stainless steel
	44218406DG	Front Panel	P models; Models starting 10/1/14; Dark gray
	44218406W	Front Panel	P models through 9/30/14 and starting again 7/1/17; All other models
	44218407	Front Panel	All models except P and U; Stainless steel
	44218403LG	Front Panel	U models; Models starting 8/18/14; Light gray
	44218404	Front Panel	U models; Models starting 8/18/14 through 3/31/15; Stainless steel
	44218408	Front Panel	U models; Models starting 4/1/15; Stainless steel

*** Add Letter To Designate Color. Q - Bisque W - White**

© Copyright, Alliance Laundry Systems LLC – DO NOT COPY or TRANSMIT

Cabinet Front Panels and Nameplates

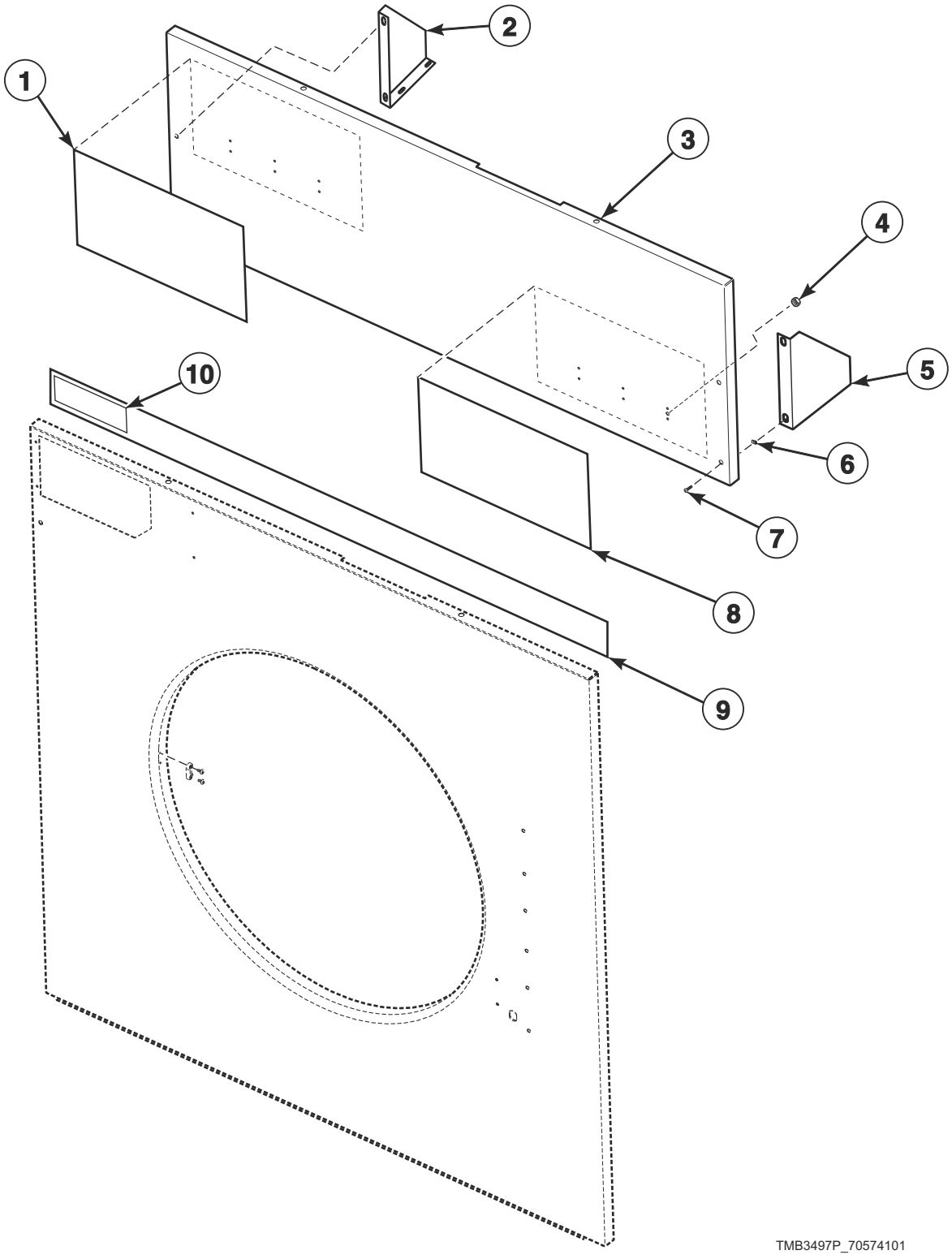

© Copyright, Alliance Laundry Systems LLC – DO NOT COPY or TRANSMIT

Cabinet Front Panels and Nameplates

REF	PART NO.	DESCRIPTION	COMMENTS
	M4787P3	Front Access Panel and Door Hinge Kit	B and I models; To change from old look to new look
1	70348501	Nameplate	C models
	B12389801	Nameplate	B and I models
2	44028302DG	Top Access Panel Gusset	P models starting 10/1/14; L models starting 1/29/15; Left; Dark gray
	44028302LG	Top Access Panel Gusset	U models; Left; Light gray
	44028302*	Top Access Panel Gusset	P models through 9/30/14; L models through 1/28/15; All other models; Left
3	44012701*P	Front Access Panel	LU models; P models through 9/30/14
	44012702P	Access Panel	L models through 3/31/15; PH, PK, PT and PU models through 9/30/14; Stainless steel
	44012713	Front Access Panel	L and P models; Models starting 4/1/15; Stainless steel
	44012712DG	Front Access Panel	P models; Models starting 10/1/14; Dark gray
	44012707*P	Front Access Panel	CK, CT, G, H, K, N and S models; U models through 8/17/14
	44012709LG	Front Access Panel	U models; Models starting 8/18/14; Light gray
	44012709B	Front Access Panel	B and I models
	44012714	Front Access Panel	CK, CT, H, S and U models; Stainless steel
4	M400977	Nut	L and P models require 2 for access panel trim; U models starting 8/18/14 require 5
5	44028301DG	Top Access Panel Gusset	P models starting 10/1/14; L models starting 1/29/15; Right; Dark gray
	44028301LG	Top Access Panel Gusset	U models; Right; Light gray
	44028301*	Top Access Panel Gusset	P models through 9/30/14; L models through 1/28/15; All other models; Right
6	70030401	Nut	
7	70182601	Screw	4 required
8	44010401	Nameplate	H models
	44010601	Nameplate	S models
	44235401	Nameplate Overlay	U models; Models through 8/17/14
	F8443102	Nameplate	U models; Models starting 8/18/14
	70128901	Nameplate Overlay	P models; Models through 9/30/14
	70509601	Nameplate	P models; Models starting 10/1/14
	70243901	Nameplate	L models; Models through 3/27/15
	70522001	Nameplate	L models; Models starting 3/28/15
	70410201	Nameplate Overlay	G models
	44331401	Nameplate Overlay	K models
9	70399404	Access Panel Trim	G and K models; Mounts over front panel assembly and control panel
10	70414001	Label	G and K models; Coin

*** Add Letter To Designate Color. Q - Bisque W - White**

© Copyright, Alliance Laundry Systems LLC – DO NOT COPY or TRANSMIT

Door Assembly

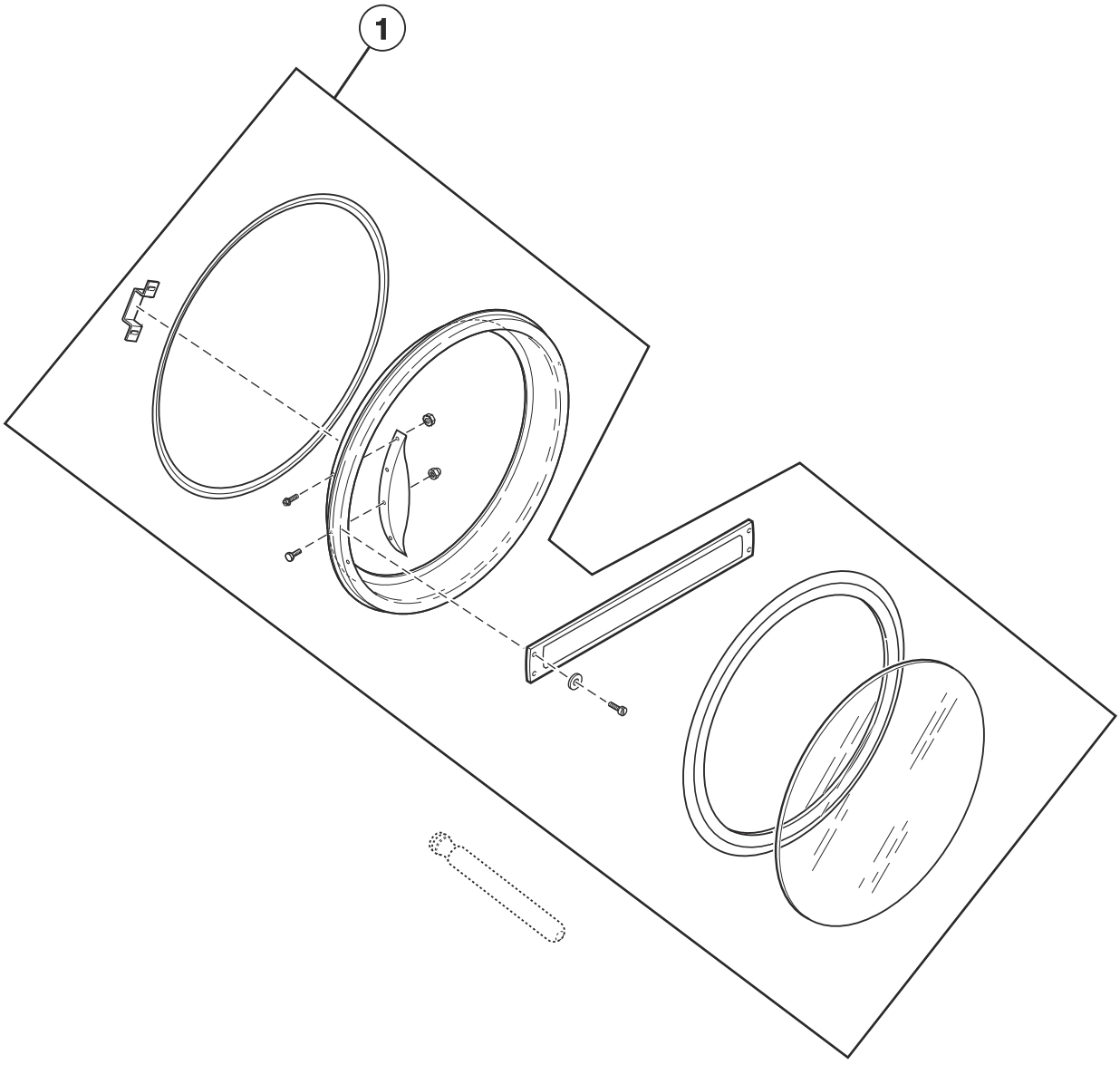

TMB3298P_70574101

© Copyright, Alliance Laundry Systems LLC – DO NOT COPY or TRANSMIT

Door Assembly

REF	PART NO.	DESCRIPTION	COMMENTS
1	44248001	Door Assembly	H models
	44215801	Door Assembly	N and S models; U models through 8/17/14
	44272201	Door Assembly	U models; Models starting 8/18/14
	44248201	Door Assembly	B, C and I models
	44294501LG	Door Assembly	L and P models
	44294501B	Door Assembly	P models starting 7/5/16; Use with stainless steel front panel; Black
	70407402P	Door Assembly	G and K models

© Copyright, Alliance Laundry Systems LLC – DO NOT COPY or TRANSMIT

Door Components

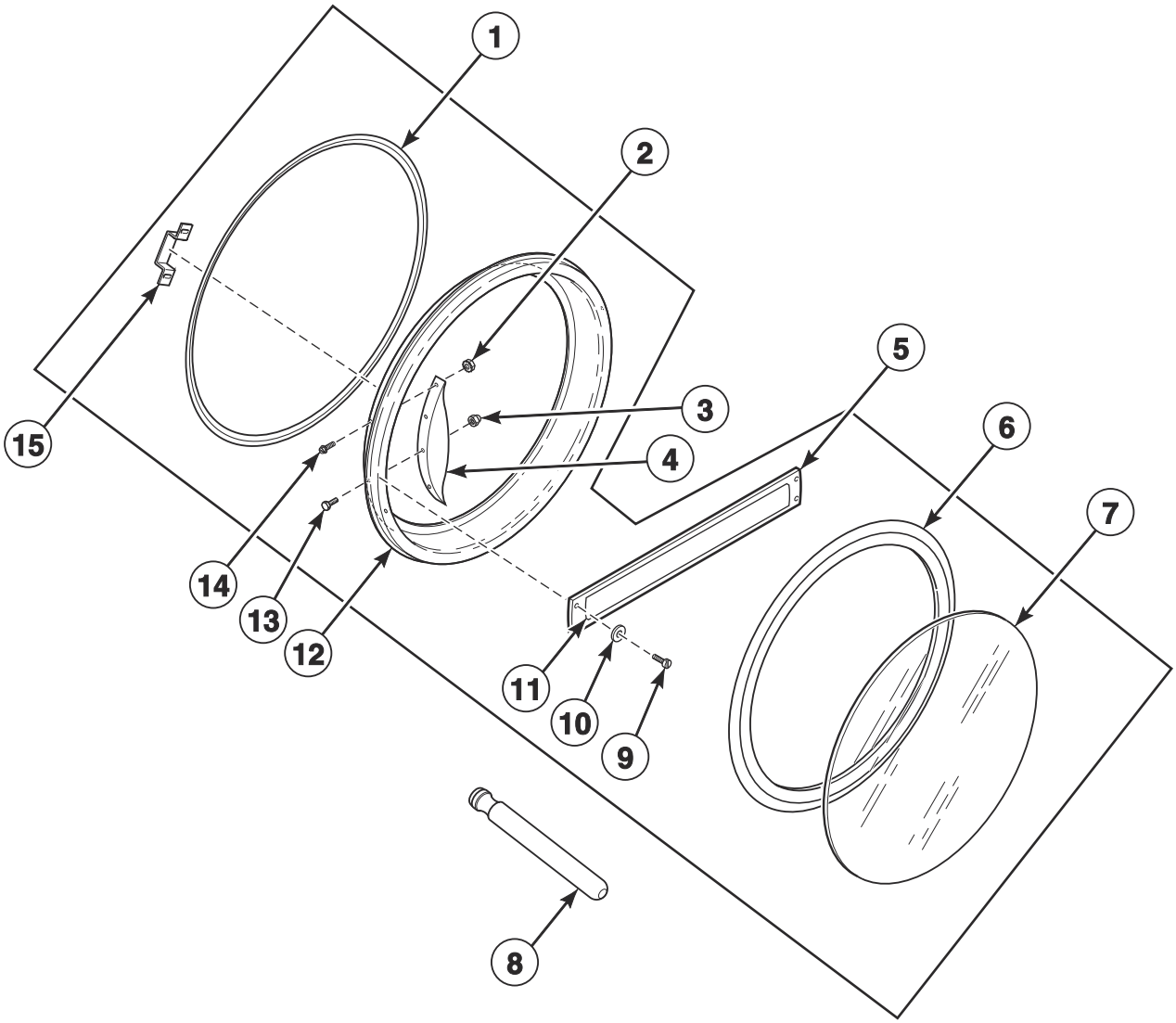

TMB3298PA_70574101

© Copyright, Alliance Laundry Systems LLC – DO NOT COPY or TRANSMIT

Door Components

REF	PART NO.	DESCRIPTION	COMMENTS
1	44217401	Door Ring Gasket	
2	44071201	Nut	H, N and S models; 4 required
3	M414215	Nut	
4	44057702	Door Handle	H models
	44007901	Door Handle	B, C, I, N and S models; U models through 8/17/14
	44263801	Door Handle	U models; Models starting 8/18/14; Use 901620 Screw, 803871 Screw and 44088001 Nut to attach; 90-degree chrome pull handle
5	70399501B	Handle Bar	G and K models
6	70211902P	Door Seal Kit	Use Loctite 414 for seal
7	44008402P	Door Glass	H models
	44008401P	Door Glass	All other models
8	M4221P4	Door Glass Installation Tool	
9	70126301	Pop Rivet	G and K models; 4 required
10	70409301	Washer	G and K models; 2 required
11	70411401	Nameplate Overlay	G models; Coin
	44144401	Nameplate Overlay	K models; Coin
12	44215701	Door Ring	H, N and S models; P models through 9/30/14; U models through 8/17/14; L models through 1/28/15
	44294601LG	Door Ring and Handle Assembly	P models starting 10/1/14; L models starting 1/29/15; Light gray
	44294601B	Door Ring and Handle Assembly	P models starting 7/5/16; Use with stainless steel and white front panel; Black
	44217502	Door Ring Assembly	U models; Models starting 8/18/14
	44215703	Door Ring	B, C and I models
	44326003B	Door Ring Assembly	G and K models
	44326004HG	Door Ring Assembly	H and U models without stainless steel front panel
	44326004B	Door Ring Assembly	S models without stainless steel front panel
13	M400661	Screw	Door strike
14	61199	Screw	H, N and S models; 4 required
15	44219701	Door Latch Bracket	

© Copyright, Alliance Laundry Systems LLC – DO NOT COPY or TRANSMIT

Hinge Components

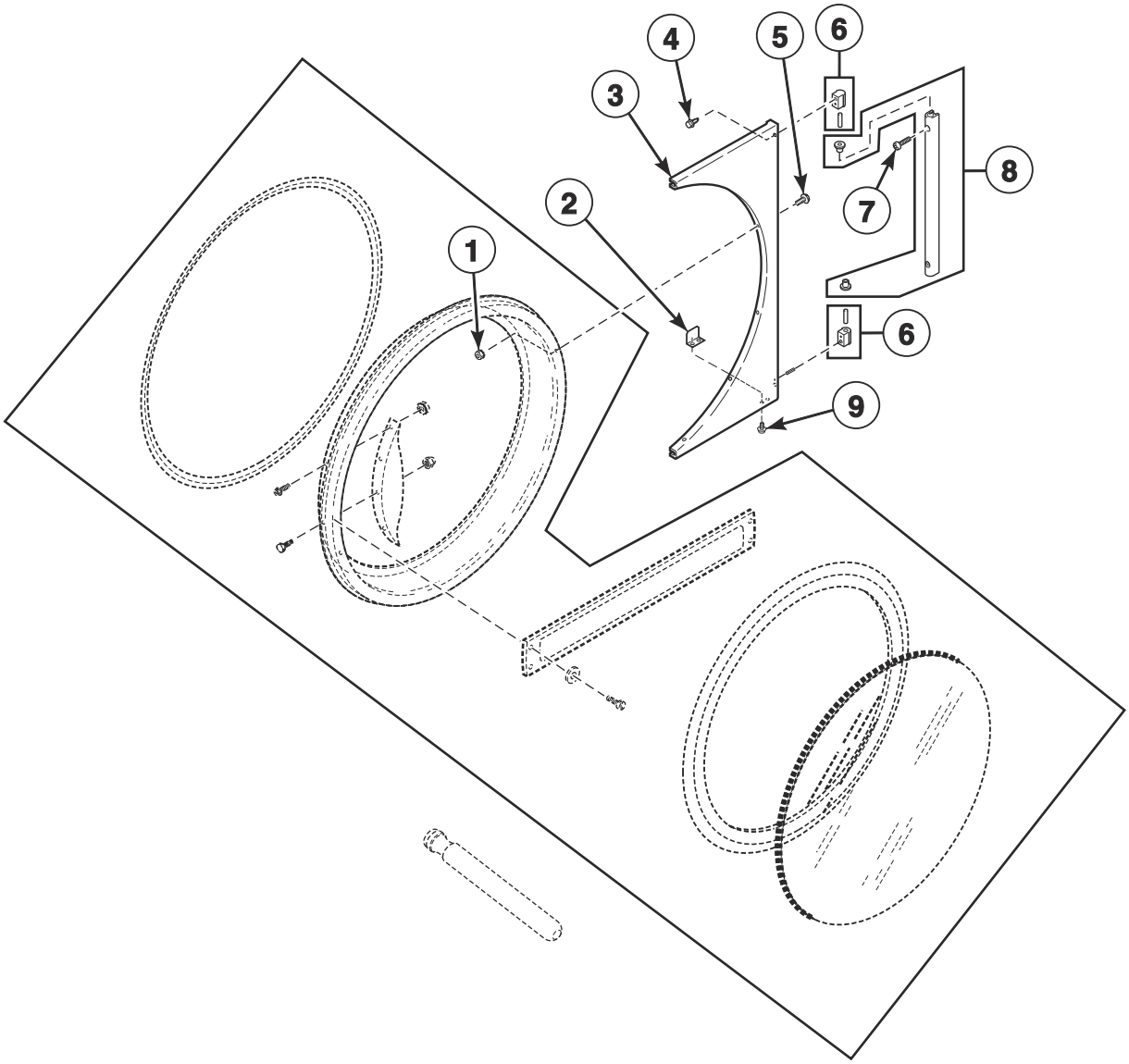

TMB3091P_70574101

© Copyright, Alliance Laundry Systems LLC – DO NOT COPY or TRANSMIT

Hinge Components

REF	PART NO.	DESCRIPTION	COMMENTS
	M4787P3	Front Access Panel and Door Hinge Kit	B and I models; To change from old look to new look
1	23951	Nut	6 required
2	70215001P	Door Switch Actuator Kit	
3	44075207B	Door Hinge	G and K models; P models starting 7/1/17 with white front panel and starting 7/1/16 with stainless steel front panel
	44218703LG	Door Hinge Assembly	L, P and U models; Light gray
	44218701*	Door Hinge Assembly	P models through 9/30/14; L models through 1/28/15; All other models except G and K models
	44218704	Door Hinge Assembly	H, S and U models; Stainless steel
4	70442101	Screw	3 required
5	M400044	Screw	6 required
6	M4773P3	Hinge Cam Kit	B, G, I and K models; P models starting 7/1/17 with white front panel and starting 7/1/16 with stainless steel front panel
	M4772P3	Hinge Cam Kit	C, H, L, N, P, S and U models
7	70409801	Screw	B, G, I and K models; P models starting 7/1/17 with white front panel and starting 7/1/16 with stainless steel front panel; 2 required
	70033504	Screw	C, H, L, N, P, S and U models; 2 required
8	44035002	Door Hinge Lug Assembly	G and K models; P models starting 7/1/17 with white front panel and starting 7/1/16 with stainless steel front panel; Black
	44218101	Door Hinge Lug Assembly	All other models
9	70058501	Pop Rivet	2 required

*** Add Letter To Designate Color. Q - Bisque W - White**

© Copyright, Alliance Laundry Systems LLC – DO NOT COPY or TRANSMIT

Lint Panel Components

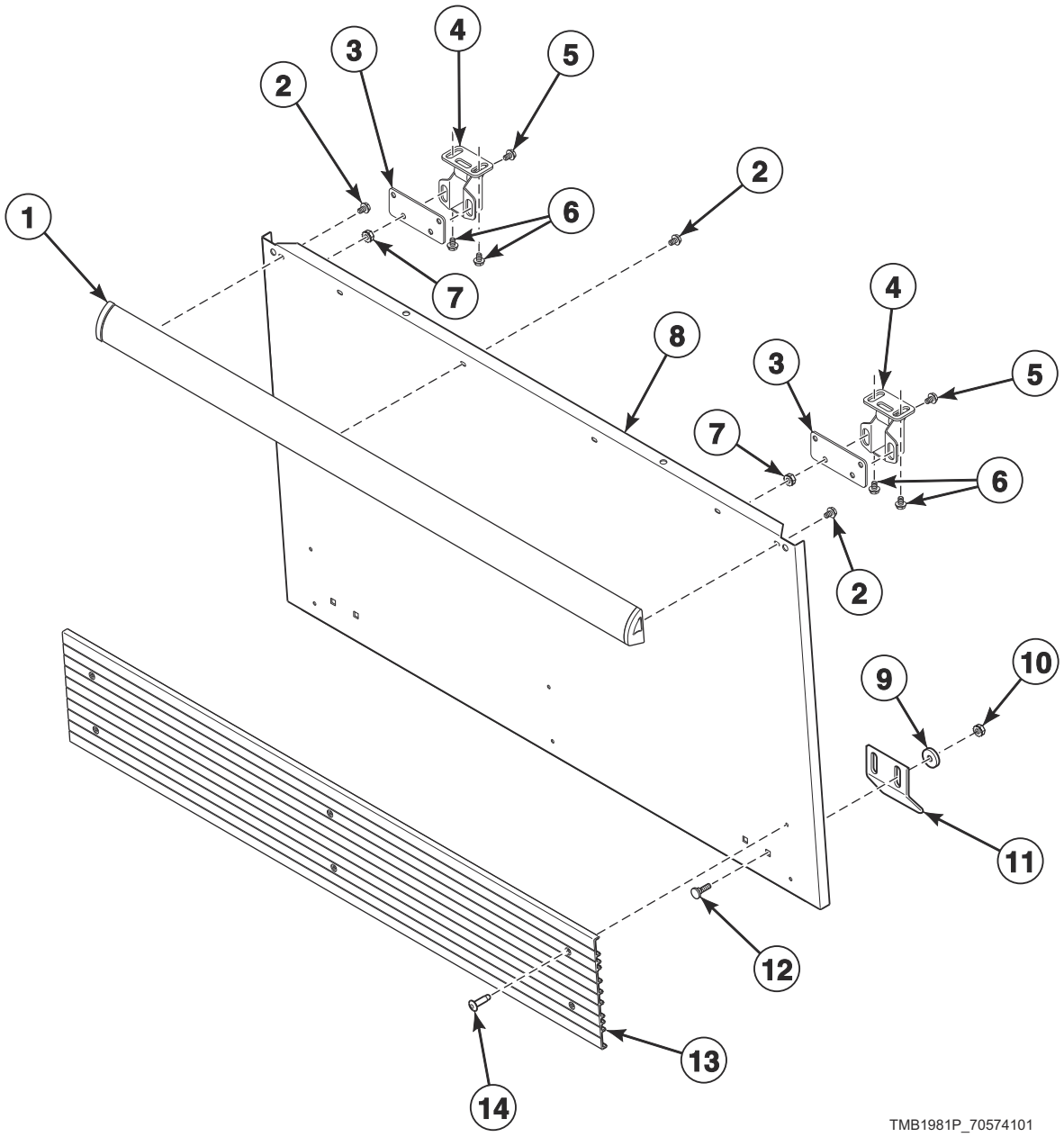

© Copyright, Alliance Laundry Systems LLC – DO NOT COPY or TRANSMIT

Lint Panel Components

REF	PART NO.	DESCRIPTION	COMMENTS
1	44049903	Handle and Caps Assembly	B, C, I, N, S and U models; L models through 1/28/15; P models through 9/30/14 and starting again 7/1/17 with white front panel and starting 7/5/16 with stainless steel front panel; Black
	70407212	Handle Bumper	P models starting 10/1/14; L models starting 1/29/15
	44049904	Handle and Caps Assembly	H and U models; Gray
	70407204	Handle Bumper	G and K models; Black and blue; Does not have endcaps
2	430757	Screw	6 required
3	44014001	Roller Catch Mounting Bracket	2 required
4	H87020202	Roller Catch	2 required; Includes strike
5	61199	Screw	8 required
6	D501086	Screw	4 required
7	70054	Nut	8 required
8	44012304DG	Lint Panel	P models; Models starting 10/1/14; Dark gray
	44012307	Lint Panel	P models; Stainless steel
	44012301*P	Lint Panel	P models through 9/30/14; All other models
	44012302P	Lint Panel	P models through 9/30/14; All other models through 3/31/15; Stainless steel
	44012306	Lint Panel	All models except P models starting 4/1/15; Stainless steel
	44012303LG	Lint Panel	U models; Light gray
9	M405535	Washer	4 required
10	44087101	Nut	4 required
11	44017801	Lint Panel Clip	2 required
12	44017901	Bolt	4 required
13	70117611	Kickplate	B, C, G, I, K, L, N, P and S models; U models through 8/17/14; Black
	70117612	Kickplate	H models; U models starting 8/18/14; Gray
14	70126301	Pop Rivet	B, C, G, I, K, L, N, P and S models; U models through 8/17/14; Black; 6 required
	70126401	Pop Rivet	H models; U models starting 8/18/14; Gray; 6 required

*** Add Letter To Designate Color. Q - Bisque W - White**

© Copyright, Alliance Laundry Systems LLC – DO NOT COPY or TRANSMIT

Lint Panel Switch Assembly

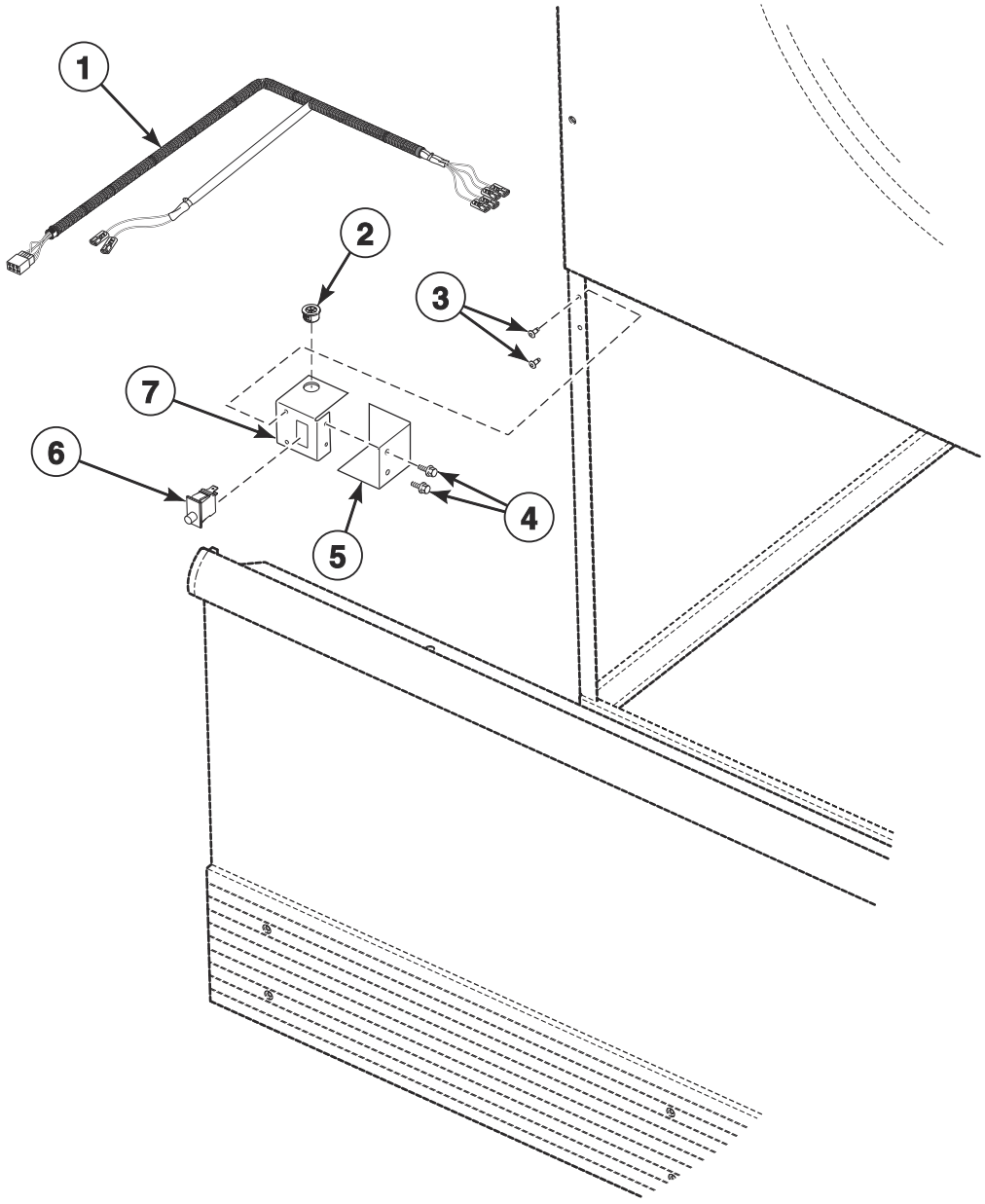

TMB2992P_70574101

© Copyright, Alliance Laundry Systems LLC – DO NOT COPY or TRANSMIT

Lint Panel Switch Assembly

REF	PART NO.	DESCRIPTION	COMMENTS
1	44227001	Base Harness	
2	M411537	Bushing	
3	430725	Pop Rivet	2 required
4	430497	Screw	2 required
5	44026801	Lint Panel Switch Cover	
6	70413401	Switch Assembly	With boot
7	44013401	Lint Panel Switch Bracket	

© Copyright, Alliance Laundry Systems LLC – DO NOT COPY or TRANSMIT

Lint Screen and Drive Guard

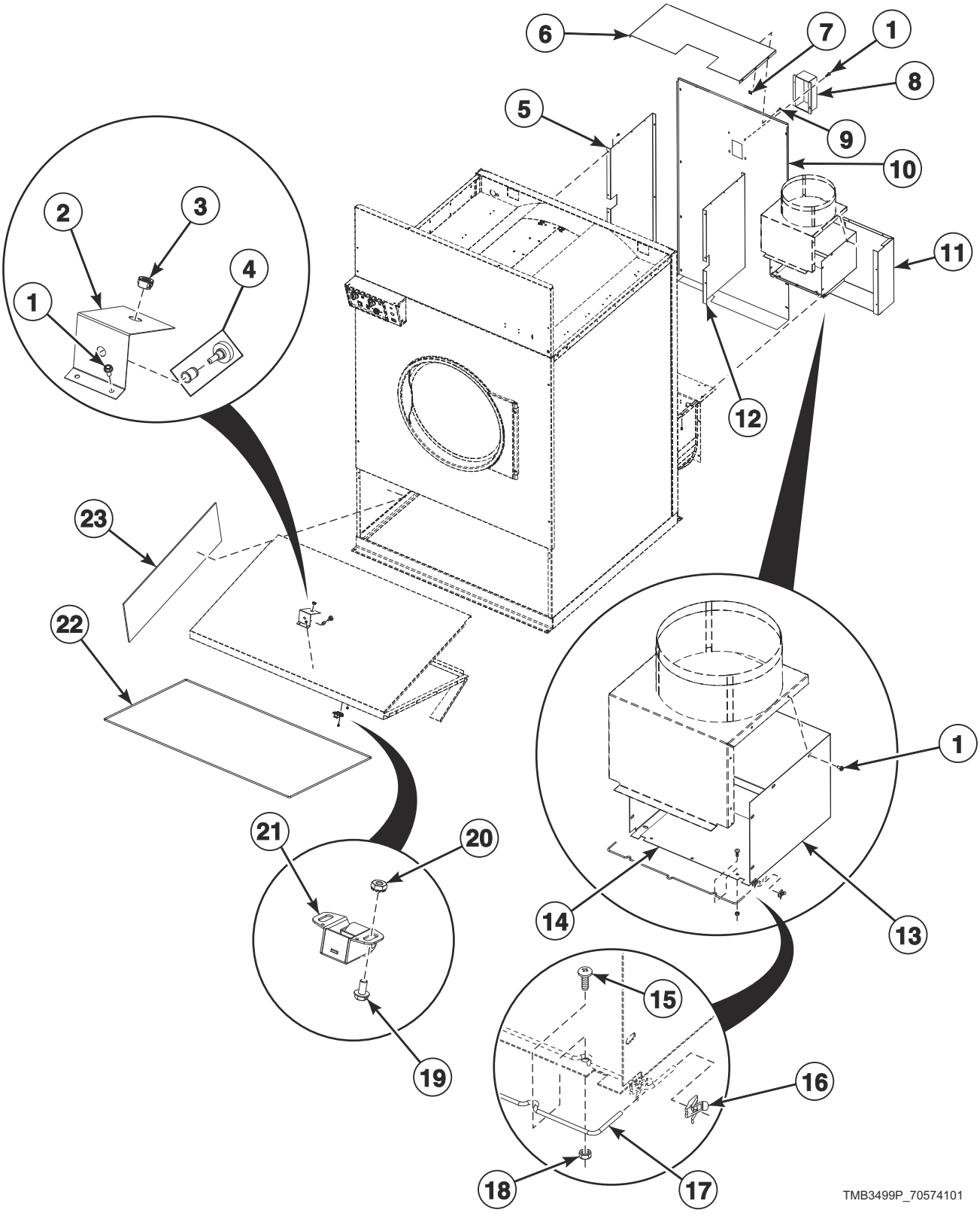

© Copyright, Alliance Laundry Systems LLC – DO NOT COPY or TRANSMIT

Lint Screen and Drive Guard

REF	PART NO.	DESCRIPTION	COMMENTS
1	430497	Screw	
2	44051301	Thermistor Bracket Assembly	Includes bracket and thermistor nut
3	M411537	Bushing	2 required for thermistor harness and cabinet rear
4	M414704	Thermistor	
5	44160001	Belt Guard Side	Left; Use 70015709 Gasket on edges
6	44253001	Belt Guard	Top
7	M400984	Clip	12 required
8	44222501	Guard Extension	Moisture sensing
9	M411072	Screw	12 required
10	44253101	Belt Guard	Non-moisture sensing
	44253102	Belt Guard	Moisture sensing
11	44159801	Belt Guard	Corner
12	44160101	Belt Guard Side	Right
13	M412391	Exhaust Duct Box Wrap	
14	M413402	Damper Vane	
15	M400044	Screw	3 required
16	M400976	Clip	
17	M413401	Damper Rod	
18	23951	Nut	3 required
19	61199	Screw	
20	70054	Nut	
21	H87020202	Roller Catch	Includes strike
22	44063603P	Lint Screen	Includes frame
	44077703P	Lint Screen	Includes snaps; Frame not included
23	M413538	Insulation	

*** Add Letter To Designate Color. Q - Bisque W - White**

© Copyright, Alliance Laundry Systems LLC – DO NOT COPY or TRANSMIT

Cylinder and Trunnion Assembly

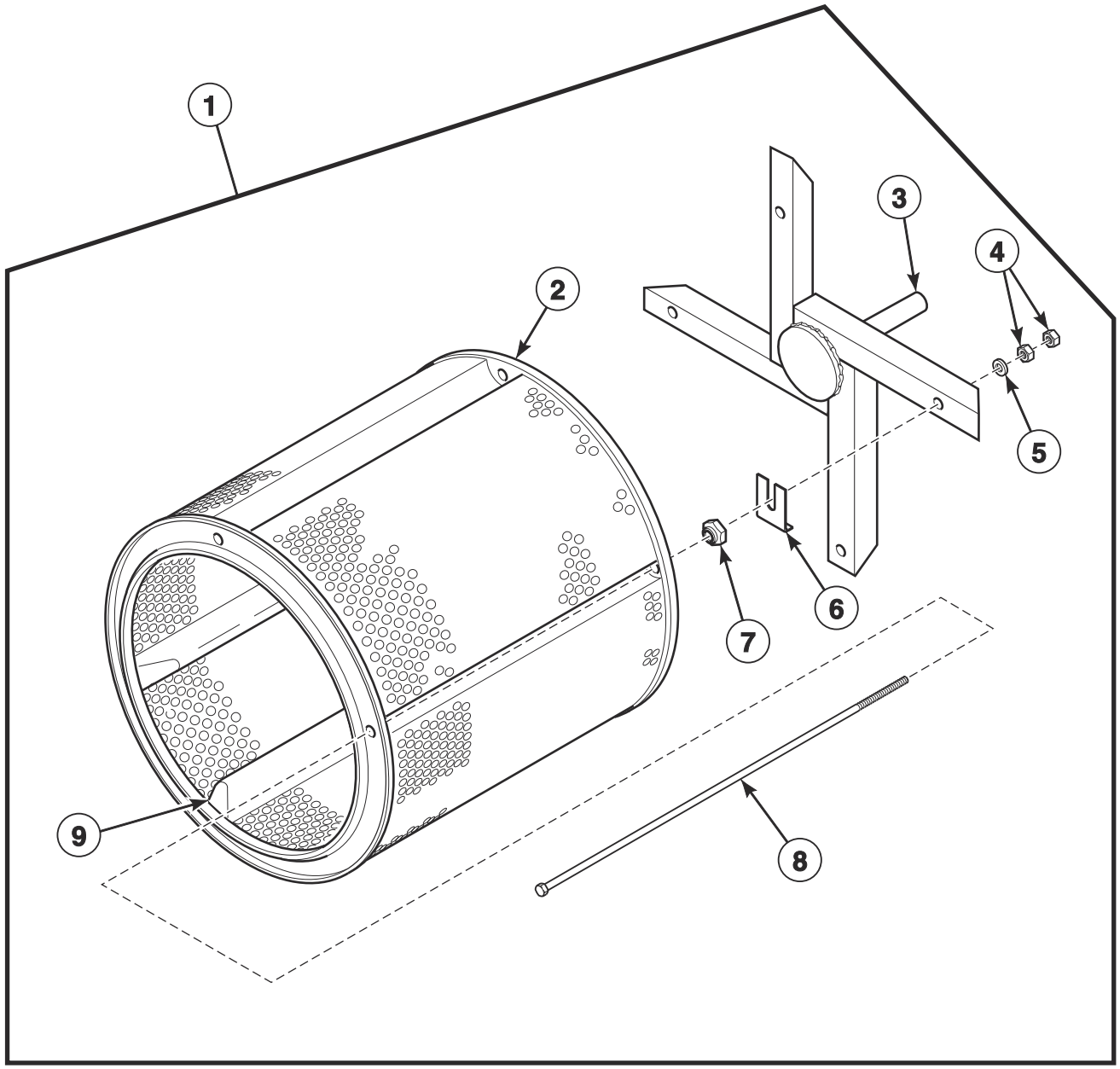

TMB1811B_70574101

© Copyright, Alliance Laundry Systems LLC – DO NOT COPY or TRANSMIT

Cylinder and Trunnion Assembly

REF	PART NO.	DESCRIPTION	COMMENTS
1	44221601	Cylinder and Trunnion Assembly	Galvanized; Non-moisture sensing
	44214901	Cylinder and Trunnion Assembly	Galvanized; Moisture sensing
	44221602	Cylinder and Trunnion Assembly	Stainless steel; Non-moisture sensing
	44214902	Cylinder and Trunnion Assembly	Stainless steel; Moisture sensing
2	44221501	Cylinder Assembly	Galvanized; Non-moisture sensing
	44215001	Cylinder Assembly	Galvanized; Moisture sensing
	44221502	Cylinder Assembly	Stainless steel; Non-moisture sensing
	44215002	Cylinder Assembly	Stainless steel; Moisture sensing
3	44240801	Trunnion Assembly	Non-moisture sensing
	44240802	Trunnion Assembly	Moisture sensing
4	H88412101	Nut	8 required
5	70261401	Washer	4 required
6	M401402	Spacer	As required
7	M412334	Nut	4 required
8	44215501	Bolt	4 required
9	44191205	Cylinder Rib Assembly	Moisture sensing

© Copyright, Alliance Laundry Systems LLC – DO NOT COPY or TRANSMIT

Trunnion Bearings

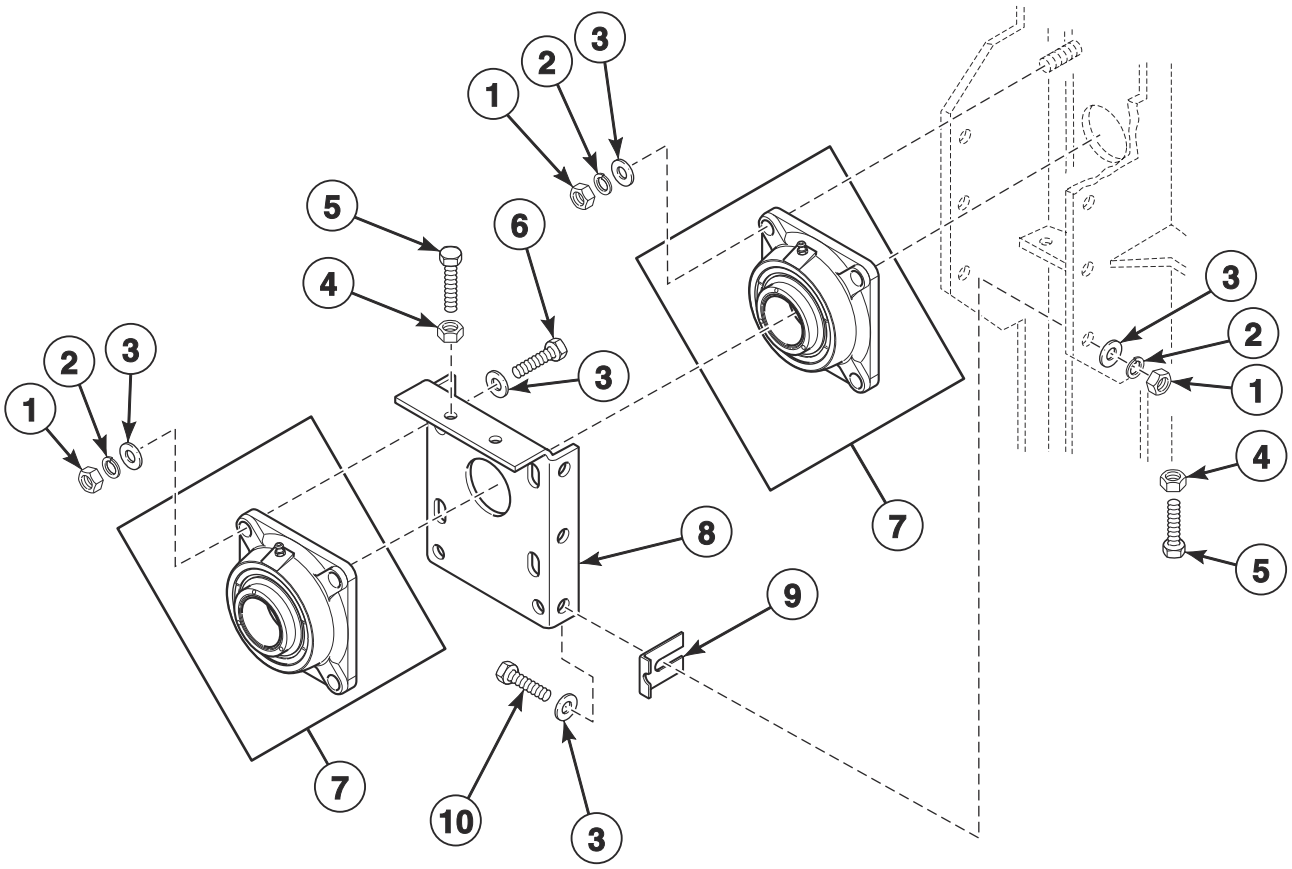

TMB3251P_70574101

© Copyright, Alliance Laundry Systems LLC – DO NOT COPY or TRANSMIT

Trunnion Bearings

REF	PART NO.	DESCRIPTION	COMMENTS
1	H88412101	Nut	
2	M400015	Washer	
3	70261401	Washer	
4	20274	Nut	
5	H88213996	Screw	
6	M411165	Screw	
7	44048301P	Flange Bearing	
8	H96428008	Bearing Mounting	
9	M401402	Spacer	As required
10	H88012034	Screw	

© Copyright, Alliance Laundry Systems LLC – DO NOT COPY or TRANSMIT

Drive Sheave, Step Pulley and Belts

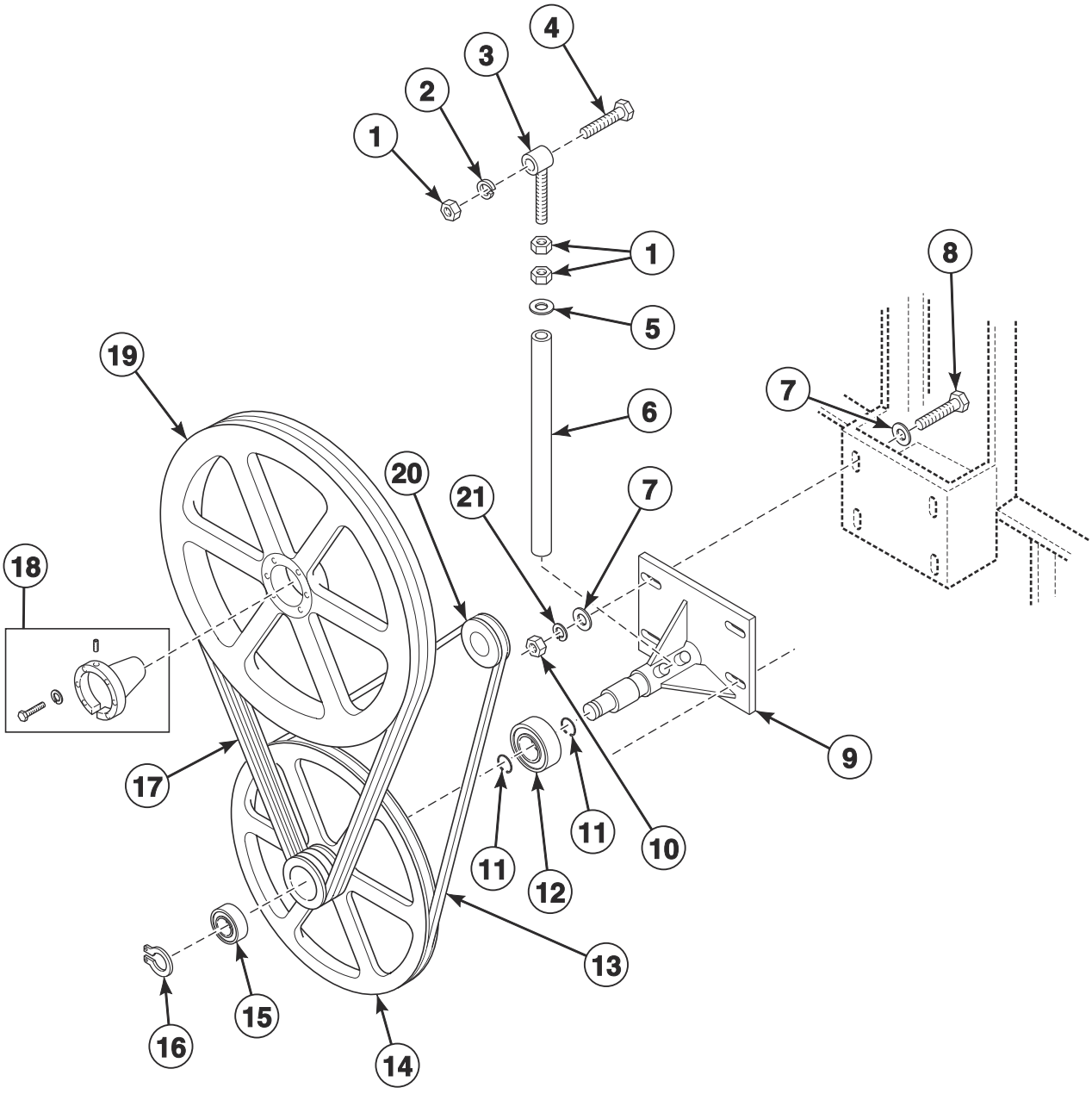

© Copyright, Alliance Laundry Systems LLC – DO NOT COPY or TRANSMIT

Drive Sheave, Step Pulley and Belts

REF	PART NO.	DESCRIPTION	COMMENTS
1	H88412101	Nut	
2	M400015	Washer	
3	44048501	Rod End	Eyebolt assembly
4	M400063	Screw	
5	70261401	Washer	
6	H96428487	Belt Adjustment Tube	
7	M400081	Washer	8 required
8	22688	Screw	4 required
9	H96357751	Jackshaft Assembly	
10	20274	Nut	4 required
11	H88603477	Retaining Ring	Step pulley bearings stops; 2 required
12	H87672374	Ball Bearing	Inner; Step pulley
13	F280362	Belt	
14	M4696P3	Step Pulley and Bearing Kit	Includes H96428024 Step Pulley, M414321 Spacer, M4718P3 Step Pulley Outer Bearing Kit and items 11, 12 and 15
15	M414367	Ball Bearing	Outer
16	H88602263	Retaining Ring	Step pulley to jackshaft
17	H87533816P	Belt Set	Set of 3
18	H8752985HP	Bushing	Includes M400014 Washer, 44048902 Screw and 44079204 Screw
19	H8752251H	Sheave	
20	H8752026H	Sheave	50 Hertz; 2.65 inch OD
	H87520334	Sheave	60 Hertz; 3.35 inch OD
21	M400014	Washer	4 required

© Copyright, Alliance Laundry Systems LLC – DO NOT COPY or TRANSMIT

Cylinder Drive Motor

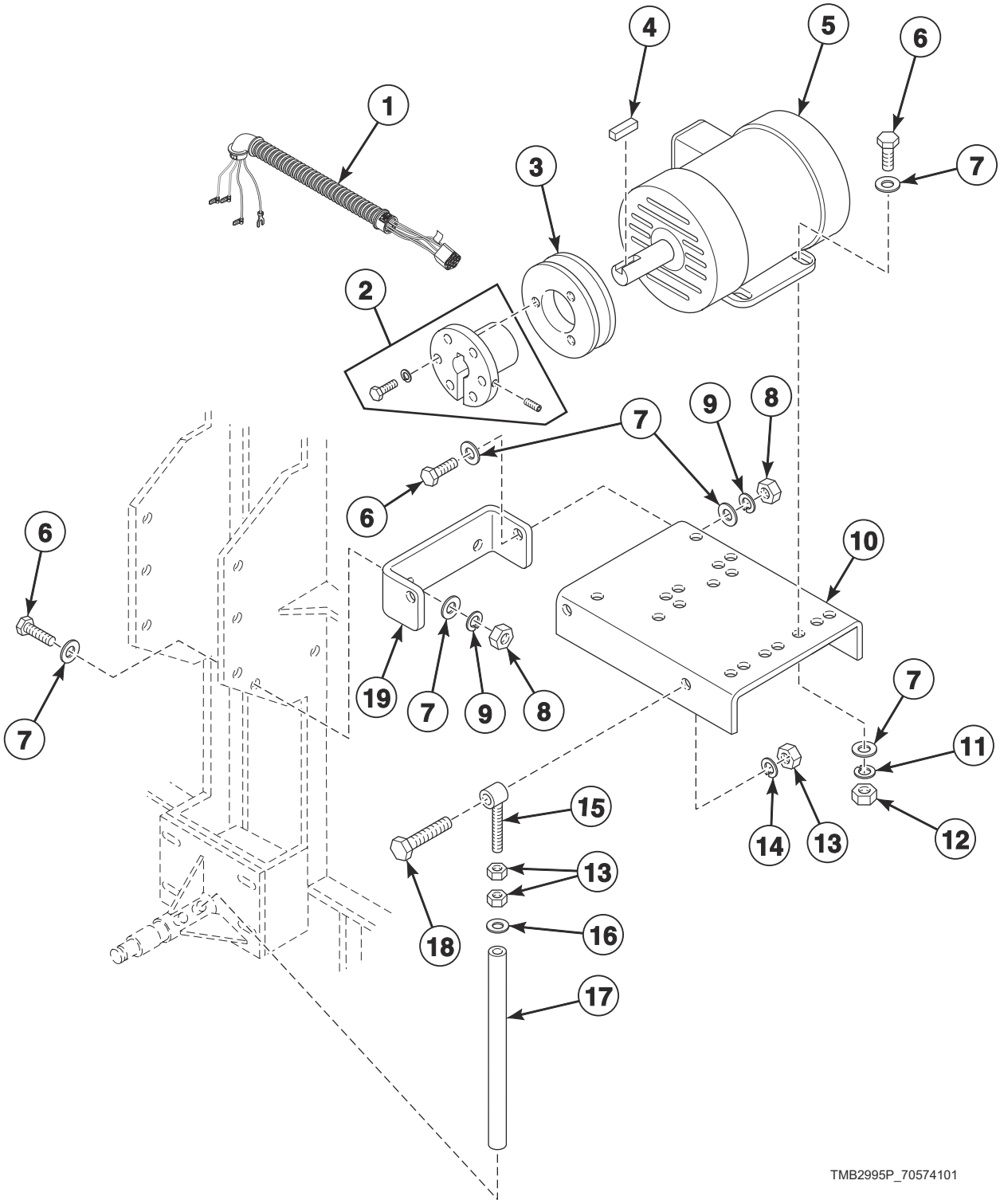

© Copyright, Alliance Laundry Systems LLC – DO NOT COPY or TRANSMIT

Cylinder Drive Motor

REF	PART NO.	DESCRIPTION	COMMENTS
1	44162901	Cylinder Motor Harness	
2	F280297	Pulley Bushing	60 Hertz
3	44264301	Sheave	60 Hertz; 4.5 inch OD
	44270801	Sheave	50 Hertz; 5.3 inch OD
4	H8752006H	Key	
5	44263401	Drive Motor	
6	M400056	Screw	
7	M400080	Washer	
8	M412986	Nut	
9	M400014	Washer	
10	44253301	Motor Base	
11	M400013	Washer	
12	70142	Nut	
13	H88412101	Nut	
14	M400015	Washer	
15	44048501	Rod End	Eyebolt assembly
16	70261401	Washer	
17	H96428487	Belt Adjustment Tube	
18	M400063	Screw	
19	H96428693	Base Bracket	

© Copyright, Alliance Laundry Systems LLC – DO NOT COPY or TRANSMIT

Moisture Sensing Components

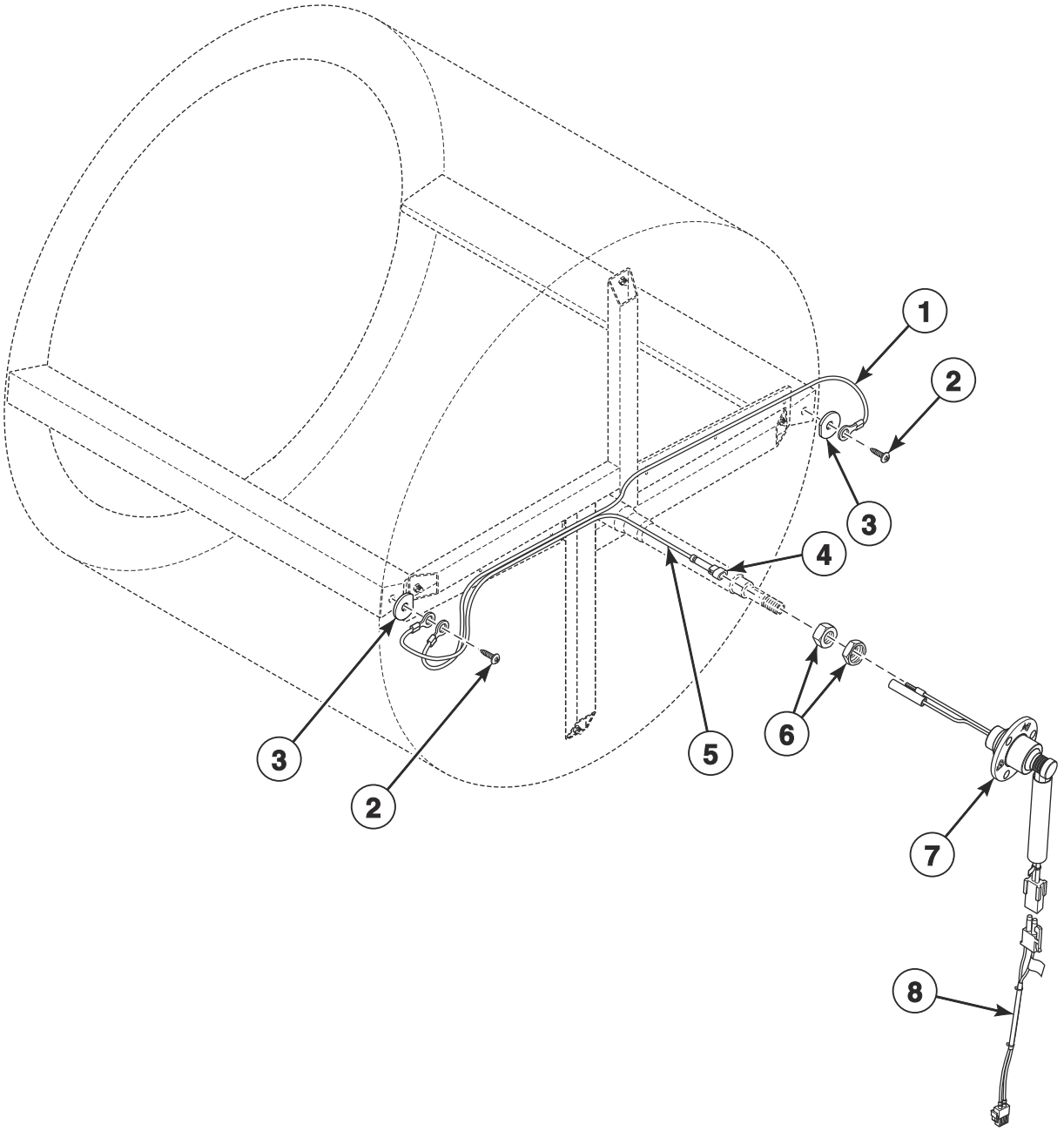

TMB3444P_70574101

© Copyright, Alliance Laundry Systems LLC – DO NOT COPY or TRANSMIT

Moisture Sensing Components

REF	PART NO.	DESCRIPTION	COMMENTS
	70468901	Moisture Sensor Test Wires	Use to troubleshoot the moisture sensor circuit
1	44208101	Rib Wire	
2	44338901	Screw	
3	44238902	Washer	
4	44370401	1 Circuit Plug Housing	
5	44344703	Moisture Sensing Harness Kit	
6	M400033	Nut	
7	44222702	Slip Ring Assembly	
8	44209201	Moisture Sensor Harness Assembly	Goes from item 7 to main harness

© Copyright, Alliance Laundry Systems LLC – DO NOT COPY or TRANSMIT

Fan Assembly

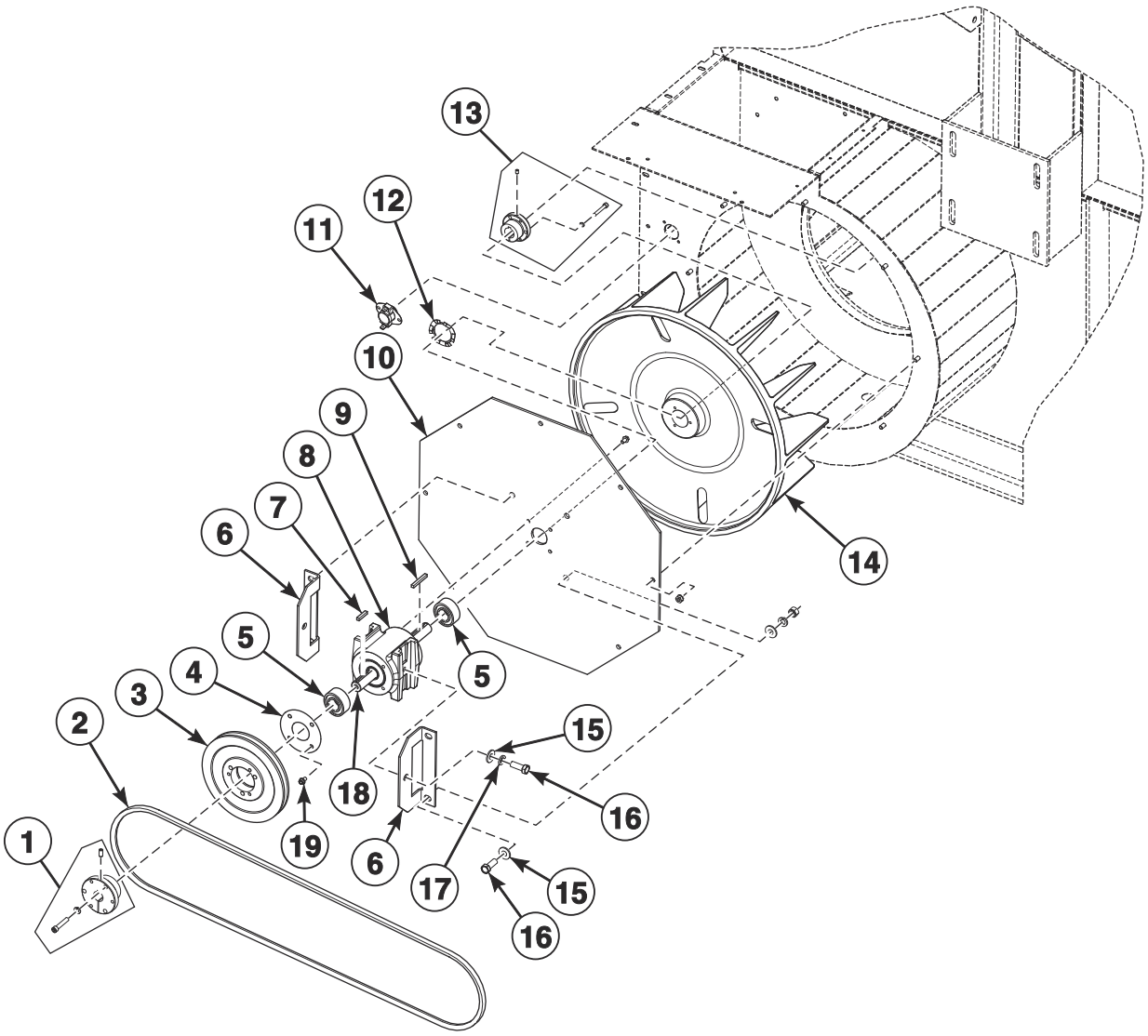

TMB2586P_70574101

© Copyright, Alliance Laundry Systems LLC – DO NOT COPY or TRANSMIT

Fan Assembly

REF	PART NO.	DESCRIPTION	COMMENTS
	M412630	Idler Housing Assembly	Includes items 5, 8 and 18
1	H8752922HP	Bushing	Includes 44079202 Screw, 03189 Washer and 44048902 Screw
2	44239801	Belt	
3	H8752060H	Sheave	6 inch OD; 50 Hertz
	H8752065H	Sheave	6.5 inch OD; 60 Hertz
4	M401370	Bearing Retainer	
5	M401375P	Ball Bearing	2 required for item 8
6	M414235	Fan Bearing Bracket	2 required
7	M401327	Key	
8	M412612	Idler Housing	
9	M400993	Key	
10	M414237	Blower Cover	
11	M411403	Limit Thermostat	184 closed
	M411946	Limit Thermostat	184 closed; Manual reset; CE and Australian models
	H8900530H	Thermostat	135 closed; Models with RT control suffix; Non-functional on models with RM and RQ control suffixes
12	M400401	Loading Spring	
13	M412917P	Bushing	Includes 44079301 Screw, 56552 Washer and 44048901 Screw
14	H96368469	Fan	
15	M400080	Washer	
16	F430116	Screw	6 required
17	M400014	Washer	
18	M414241	Idler Shaft	
19	70187202	Screw	8 required

© Copyright, Alliance Laundry Systems LLC – DO NOT COPY or TRANSMIT

Fan Motor Assembly

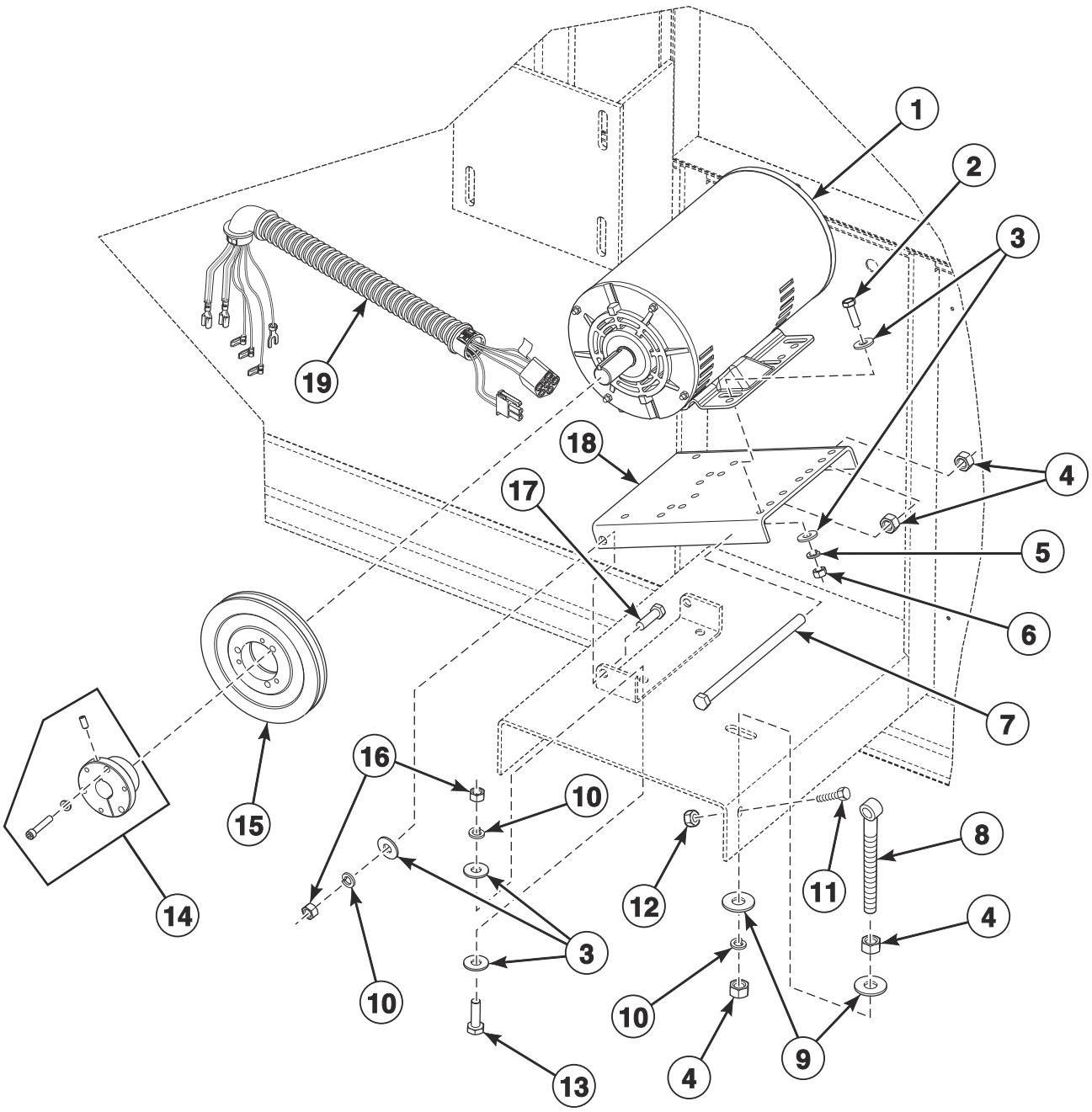

TMB2999P_70574101

© Copyright, Alliance Laundry Systems LLC – DO NOT COPY or TRANSMIT

Fan Motor Assembly

REF	PART NO.	DESCRIPTION	COMMENTS
1	44313501P	Fan Motor	3 hp; 200-208, 240 Volt/60 Hertz/3 Phase; 460-480 Volt/60 Hertz/3 Phase; Key included; No capacitor
	44046601P	Motor	3 hp; 380, 400-415 Volt/50 Hertz/3 Phase; Key included; No capacitor
	44313601	Motor	380 Volt/60 Hertz/3 Phase; Key included; No capacitor
2	M400056	Screw	4 required
3	M400080	Washer	
4	H88412101	Nut	4 required
5	M400013	Washer	4 required
6	70142	Nut	4 required
7	44161501	Screw	
8	44048501	Rod End	
9	70261401	Washer	2 required
10	M400014	Washer	
11	H88010038	Screw	Belt motor to fan motor base
12	29786	Nut	Belt motor to fan motor base
13	22688	Screw	4 required
14	44237801	Bushing	Includes 44079202 Screw, 03189 Washer and 44048902 Screw: Use with 44046501P Motor and 44046601P Motor; 7/8 inch ID
	44233801	Bushing	Includes 44079202 Screw, 03189 Washer and 44048902 Screw: Use with 44046501P Motor and 44046601P Motor; 3/4 inch ID
15	44255101	Sheave	Use with 44046501P Motor and 44046601P Motor; 6.55 inch OD
	44255201	Sheave	Use with 44046501P Motor, 44046601P Motor and 44157801 Motor; 7.15 inch OD
16	20274	Nut	4 required
17	H96428693	Base Bracket	
18	M413171	Motor Base	
19	44242601	Fan Motor Harness	

© Copyright, Alliance Laundry Systems LLC – DO NOT COPY or TRANSMIT

Airflow Switch

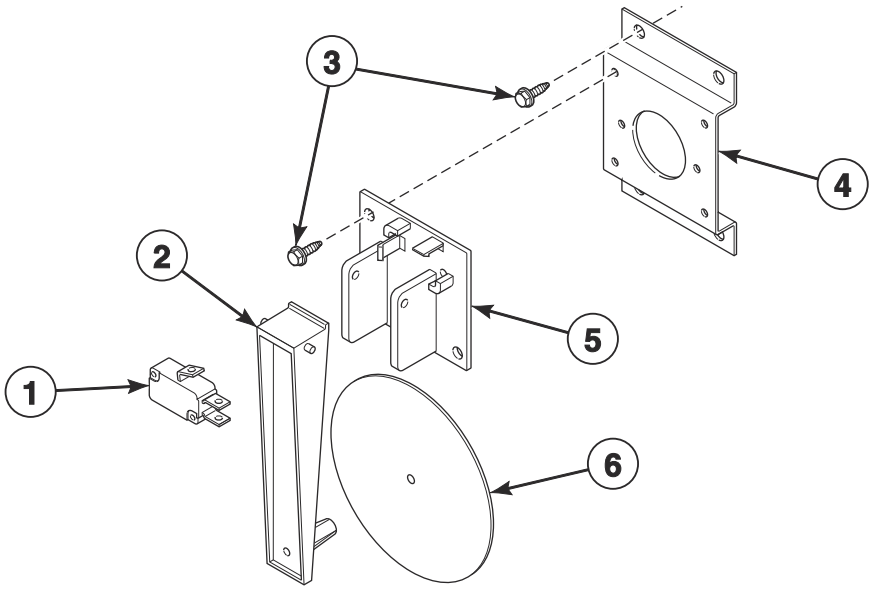

TMB3000P_70574101

© Copyright, Alliance Laundry Systems LLC – DO NOT COPY or TRANSMIT

Airflow Switch

REF	PART NO.	DESCRIPTION	COMMENTS
	70429601P	Airflow Switch Kit	Includes items 1-6
1	70411901	Switch	
2	70319401	Airflow Switch Arm	
3	430497	Screw	
4	70356301	Switch Bracket	
5	70319602	Airflow Switch and Arm Bracket	
6	70319201	Airflow Switch Vane	

© Copyright, Alliance Laundry Systems LLC – DO NOT COPY or TRANSMIT

Gas Heater Components

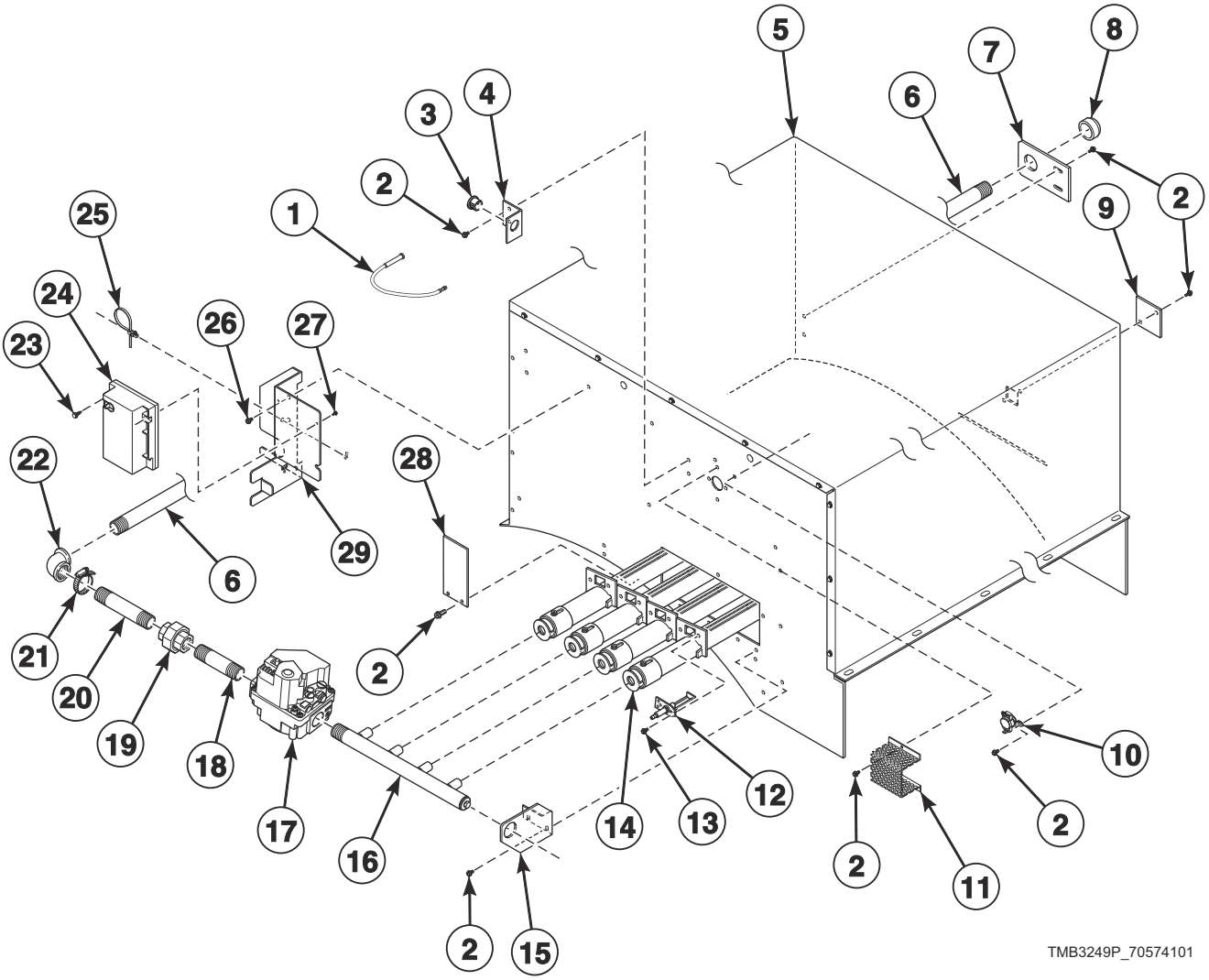

© Copyright, Alliance Laundry Systems LLC – DO NOT COPY or TRANSMIT

Gas Heater Components

REF	PART NO.	DESCRIPTION	COMMENTS
	44257701	L.P. Conversion Kit	N.G. to L.P.; Non-CE models
	70184001	Gas Valve Harness	
	44240401P	L.P. Valve Conversion Kit	Unregulated; N.G. to L.P.; Must also order orifice, refer to Installation Manual
	44240402P	L.P. Conversion Kit	Regulated; N.G. to L.P.; CE models; Must also order orifice, refer to Installation Manual
1	44239703	High Voltage Suppression Cable	
2	430497	Screw	
3	44071501	Snap Bushing	
4	431078	Stove Limit Harness Bracket	
5	44243901	Gas Stove Assembly	
6	44252401	Pipe Nipple	
7	44249301	Pipe Bracket	
8	44087801	Pipe Cap	
9	70159601	Igniter Cover	
10	431177	Stove Limit Thermostat	Non-CE and non-Australian models; L.P.
	M413989	Manual Reset Thermostat	CE and Australian models; L.P.
	70299001	Limit Thermostat	Non-CE and non-Australian models; N.G.
	44253901	Manual Reset Thermostat	CE, Australian and Korean models; N.G.
11	M414477	Thermostat Cover	
12	44328701P	Spark Electrode	
13	51782	Screw	2 required
14	M412025P	Burner	N.G. 4 required; L.P. 3 required
15	44173801	Manifold End Bracket	
16	44390002	Spud Holder Weldment	
17	44227201	Gas Valve	N.G.
	44227202	Gas Valve	L.P.
18	44249501	Pipe Nipple	
19	M411419	Pipe Union	
20	44252301	Pipe Nipple	
21	20391	Hose Clamp	
22	44249401	Pipe Elbow	
23	51783	Screw	
24	70458601P	Ignition Control	Non-CE and non-Australian models
	70483201P	Ignition Control	CE and Australian models
25	M405829	Cable Tie	
26	51780	Screw	
27	38272	Screw	
28	44249601	Burner Opening Cover	L.P.
29	44245701	Gas Valve Bracket	

© Copyright, Alliance Laundry Systems LLC – DO NOT COPY or TRANSMIT

Burner Orifices for Non-CE and Non-Australian Gas Models

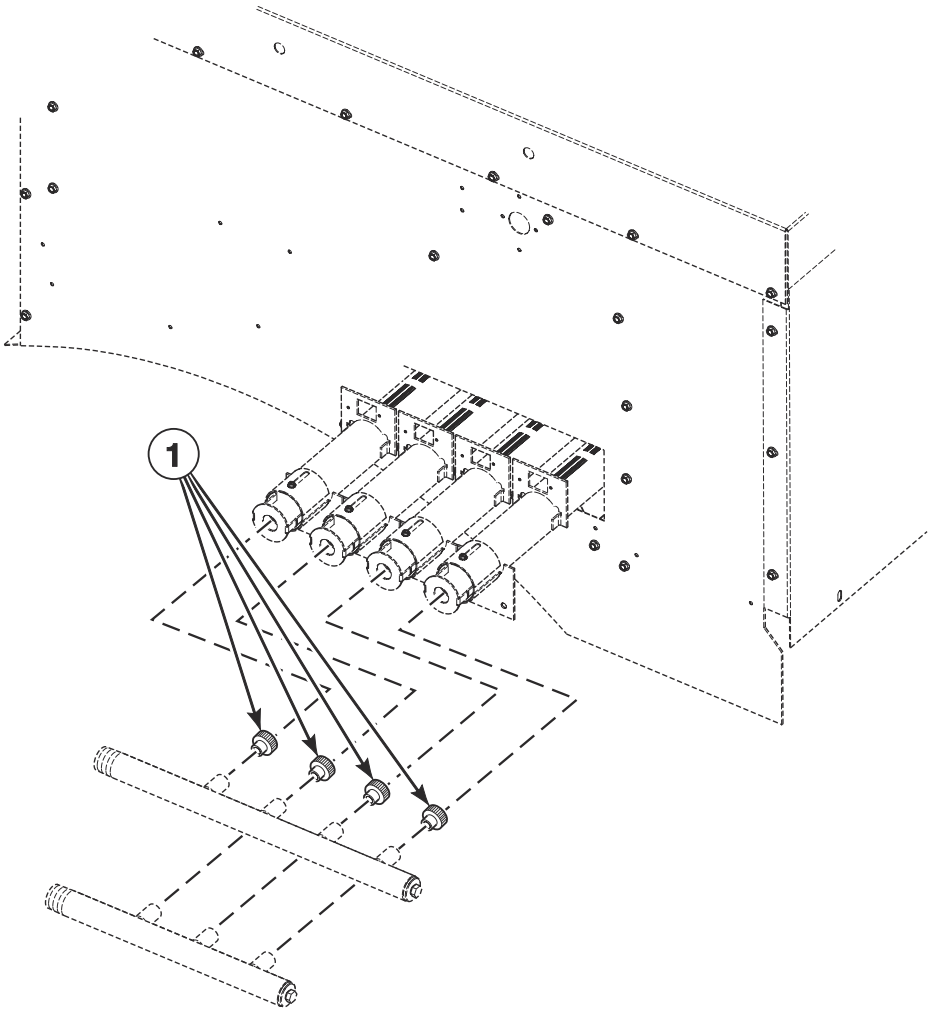

TMB2528P_70574101

© Copyright, Alliance Laundry Systems LLC – DO NOT COPY or TRANSMIT

Burner Orifices for Non-CE and Non-Australian Gas Models

REF	PART NO.	DESCRIPTION	COMMENTS
1	70684154	Burner Orifice	Natural Gas (N.G.); 0-2,000 feet; Drill no. 9 (5.0 mm); 4 required
	70684151	Burner Orifice	N.G.; 2,001-4,000 feet; Drill no. 12 (4.8 mm); 4 required
	70684149	Burner Orifice	N.G.; 4,001-6,000 feet; Drill no. 14 (4.6 mm); 4 required
	70684146	Burner Orifice	N.G.; 6,001-8,000 feet; Drill no. 17 (4.4 mm); 4 required
	70684143	Burner Orifice	N.G.; 8,001-10,000 feet; Drill no. 19 (4.2 mm); 4 required
	70684131	Burner Orifice	Liquid Petroleum (L.P.); 0-2,000 feet; 3.4 mm; 4 required
	70684129	Burner Orifice	L.P.; 2,001-4,000 feet; Drill no. 30; 4 required
	70684128	Burner Orifice	L.P.; 4,001-6,000 feet; Drill no. 1/8 (3.2 mm); 4 required
	70684126	Burner Orifice	L.P.; 6,001-8,000 feet; Drill no. 31 (3.0 mm); 4 required
	70684124	Burner Orifice	L.P.; 8,001-10,000 feet; Drill no. 33 (2.9 mm); 4 required

NOTE: For CE gas and orifice information, refer to Installation Manual.

© Copyright, Alliance Laundry Systems LLC – DO NOT COPY or TRANSMIT

Steam Heater Components - Except B, C and I Models

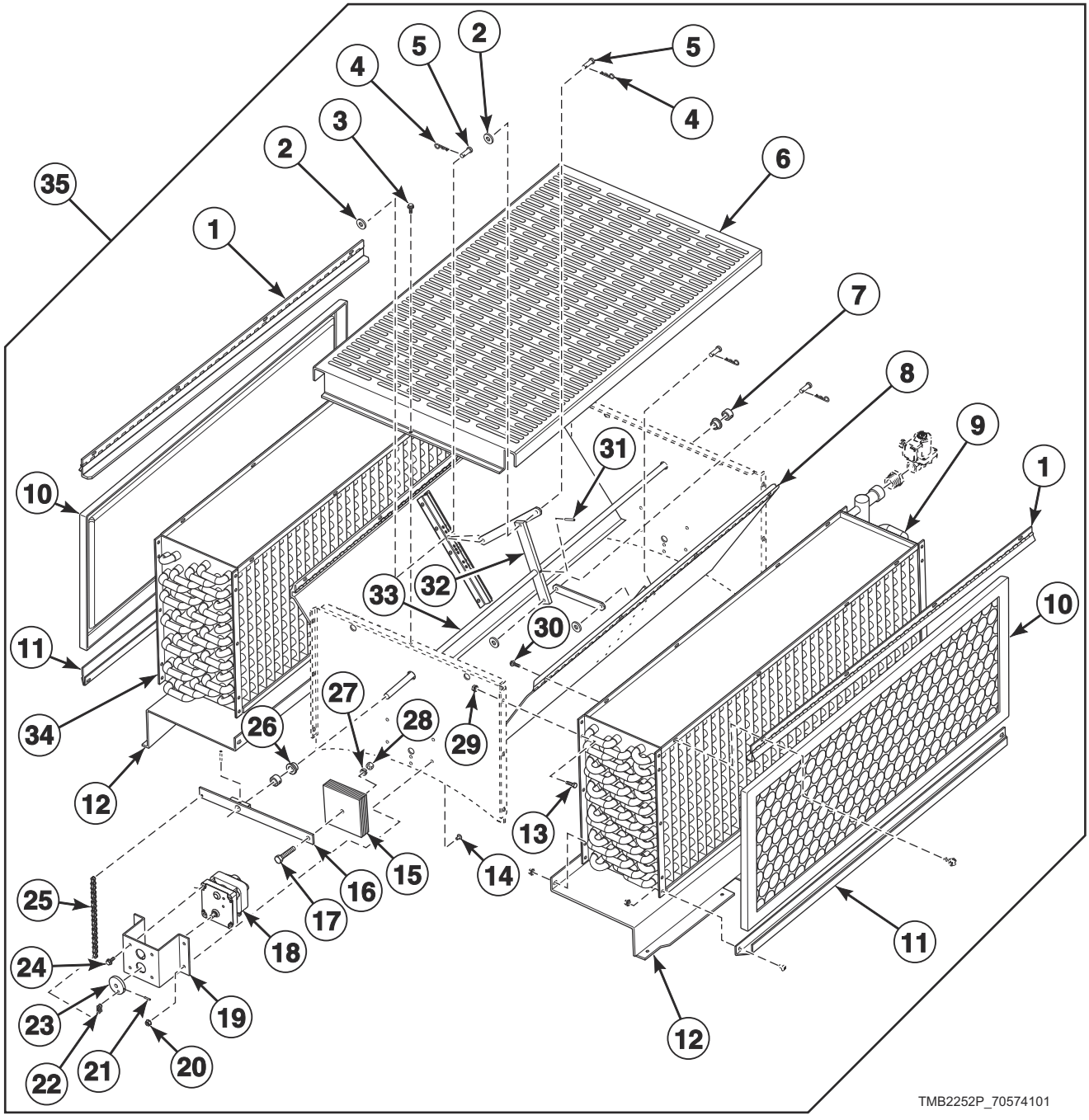

© Copyright, Alliance Laundry Systems LLC – DO NOT COPY or TRANSMIT

Steam Heater Components - Except B, C and I Models

REF	PART NO.	DESCRIPTION	COMMENTS
	M414801	Damper Bracket	Thermal oil models; 4 required
	44243601	Steam Valve Interface Harness	
1	44088101	Steam Filter Top Hinge Assembly	2 required
2	800465	Washer	4 required
3	M405188	Screw	2 required
4	44091601	Hairpin Cotter	4 required
5	44091501	Clevis Pin	4 required
6	44018501	Steam Coil Housing Cover	
	44115201	Steam Cover	
7	M414451	Shaft Collar	2 required
8	H96367685	Damper Assembly	2 required
9	M409834P	Steam Coil	All models except thermal oil models; Right; 902303 Steam Pressure Label by inlet connection
10	44172101	Filter	2 required; CE models
	H96362264	Coil Filter	2 required; All other models
11	44045101	Filter Channel	2 required
	44088101	Steam Filter Top Hinge Assembly	
12	M412201	Steam Coil Support	2 required
13	02422	Screw	14 required
14	801019	Screw	8 required
15	M413331	Damper Counterweight	7 required
16	H96387501	Actuator Arm Assembly	
17	H88010574	Screw	
18	M412905P	Damper Motor	50 Hertz
	M413592P	Damper Motor	60 Hertz
19	H96388145	Motor Bracket	
20	23951	Nut	12 required
21	H88900683	Spring Pin	
22	H96382072P	Master Link	2 required
23	H96388178	Drive Wheel	
24	61199	Screw	4 required
25	H96388186	Drive Chain	
26	M414459	Bushing	2 required
27	M400013	Washer	
28	70142	Nut	
29	29786	Nut	14 required
30	D501086	Screw	16 required
31	H88970256	Roll Pin	2 required
32	44096501	Steam Damper Actuator	
33	H96368956	Damper Shaft	
34	M409833P	Steam Coil	All models except thermal oil models; Left; 902303 Steam Pressure Label by inlet connection
35	M414490P	Steam Heater Assembly	60 Hertz; Includes items 1-34
	M414485	Steam Heater Assembly	50 Hertz; Includes items 1-34

© Copyright, Alliance Laundry Systems LLC – DO NOT COPY or TRANSMIT

Steam Heater Components - B, C and I Models

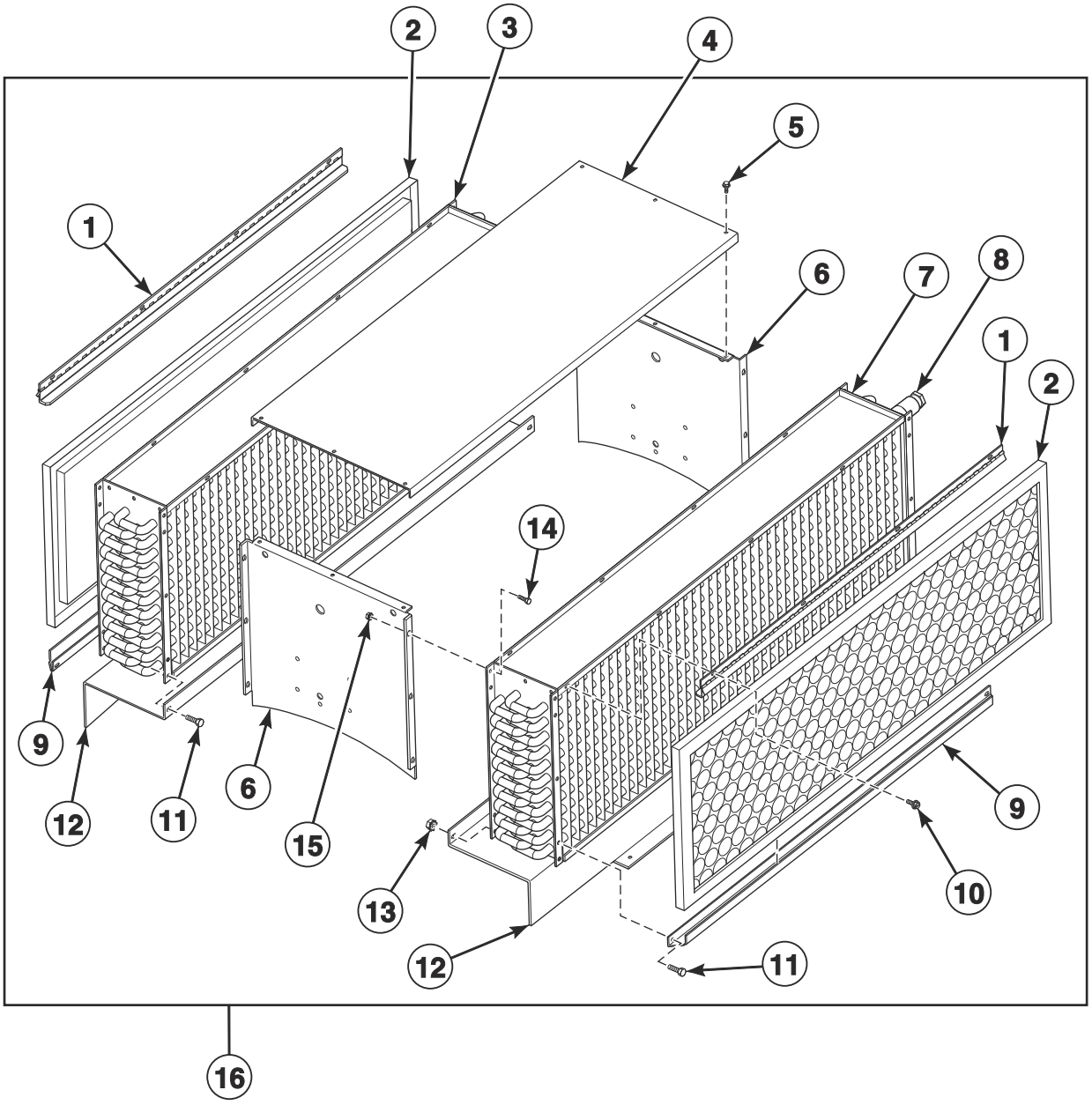

TMB3002P_70574101

© Copyright, Alliance Laundry Systems LLC – DO NOT COPY or TRANSMIT

Steam Heater Components - B, C and I Models

REF	PART NO.	DESCRIPTION	COMMENTS
	M414801	Damper Bracket	Thermal oil models; 4 required
	44243601	Steam Valve Interface Harness	
1	44088101	Steam Filter Top Hinge Assembly	2 required
2	44172101	Filter	2 required; CE models
	H96362264	Coil Filter	2 required; Non-CE models
3	M409833P	Steam Coil	All models except thermal oil models; Left; 902303 Steam Pressure Label by inlet connection
4	44114601	Steam Cover	
5	430497	Screw	6 required
6	44115001	Steam Coil Housing End	2 required
7	M409834P	Steam Coil	All models except thermal oil models; Right; 902303 Steam Pressure Label by inlet connection
8	M409844	Bushing	2 required
9	44045101	Filter Channel	2 required
10	D501086	Screw	8 required
11	801019	Screw	4 required
12	M412201	Steam Coil Support	2 required
13	23951	Nut	4 required
14	02422	Screw	16 required
15	29786	Nut	16 required
16	44114801	Steam Heater Assembly	Includes items 1-15

© Copyright, Alliance Laundry Systems LLC – DO NOT COPY or TRANSMIT

Steam Solenoid Valve

All Steam Models Except Thermal Oil Models

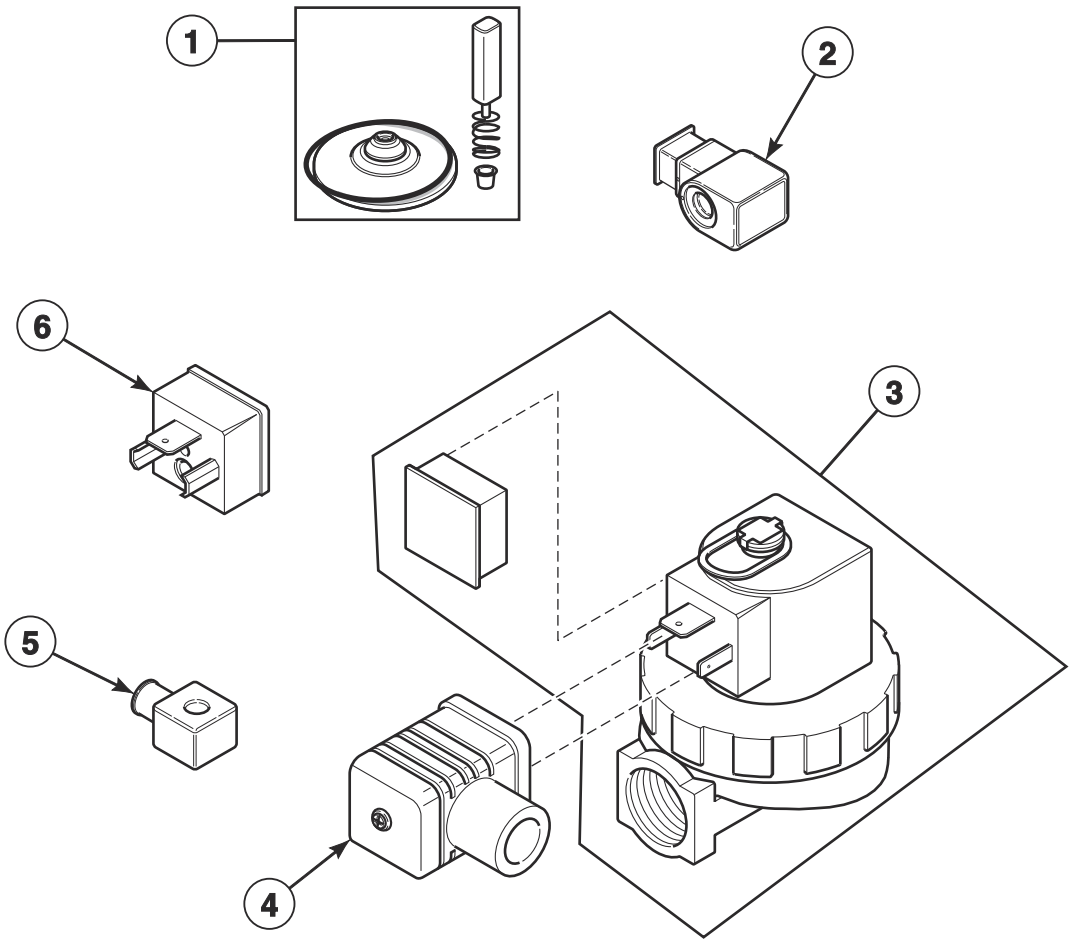

TMB3250P_70574101

© Copyright, Alliance Laundry Systems LLC – DO NOT COPY or TRANSMIT

Steam Solenoid Valve

REF	PART NO.	DESCRIPTION	COMMENTS
	F8514801	Valve Coil	Use with F8322902 Steam Valve
1	70351021P	Steam Valve Rebuild Kit	Parker; Use with 70351001P Steam Valve
	F8379502	Valve Rebuild Kit	Asco; Use with F8322902 and F8322903 Steam Valves
2	70351012	Steam Solenoid	50 Hertz; Used with F8322902 Steam Valve
3	F8521701	Valve Kit	24 Volt/60 Hertz; Parker valve replacement kit
	F8322903	Steam Valve	24 Volt/50 Hertz
	F8322901P	Valve	220 Volt/50 Hertz or 240 Volt/60 Hertz
	F8322906P	Valve	Includes F8322901P Valve and F8382301 DIN Valve Adapter Kit
4	70370301P	Solenoid Valve DIN Connector	
5	70351011P	Steam Solenoid	60 Hertz; Used with 70351001P Steam Valve
6	F8382301	DIN Valve Adapter Kit	

© Copyright, Alliance Laundry Systems LLC – DO NOT COPY or TRANSMIT

Rotation Sensor

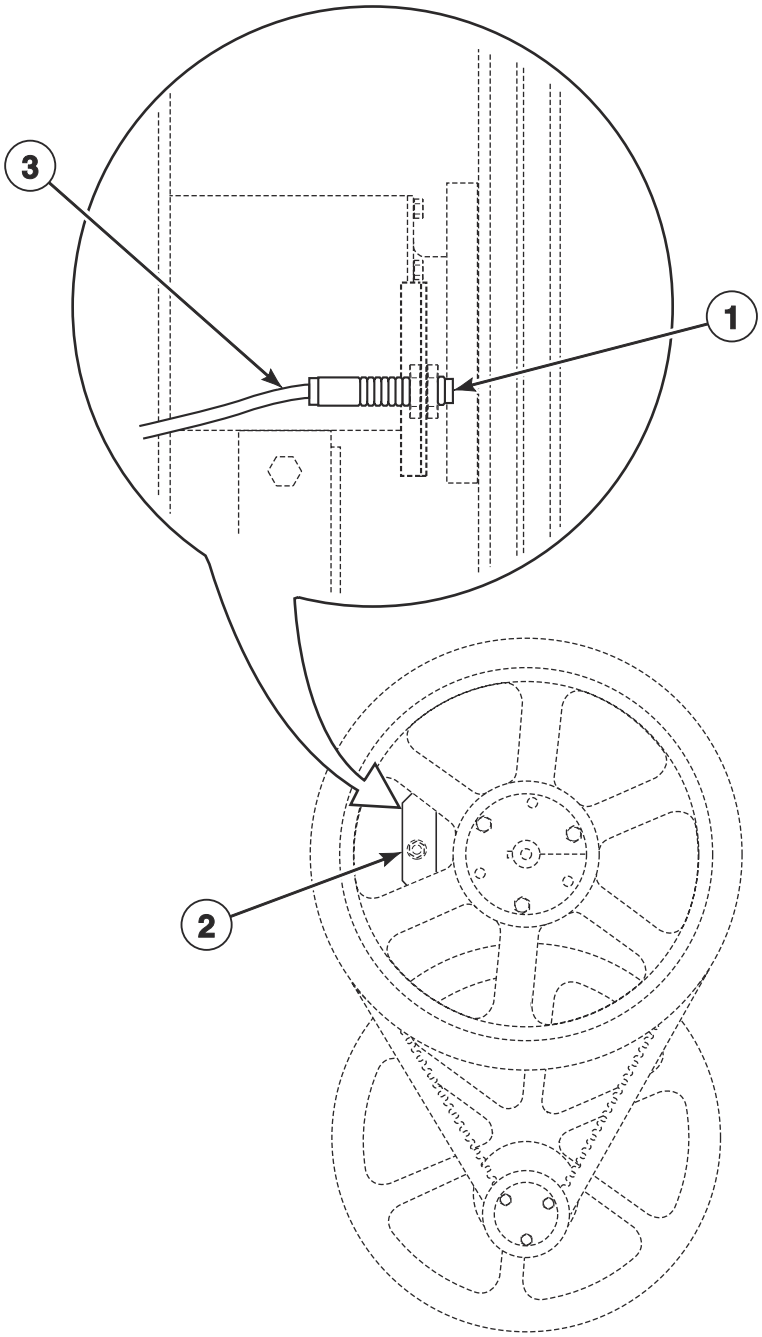

TMB2009P_70574101

© Copyright, Alliance Laundry Systems LLC – DO NOT COPY or TRANSMIT

Rotation Sensor

REF	PART NO.	DESCRIPTION	COMMENTS
	7010P	Rotation Sensor Kit	Includes item 1 and 44250501 Rotation Sensor Harness
1	F8066201	Rotation Sensor	
2	44111101	Rotation Sensor Bracket	
3	44201701	Rotation Sensor Harness	RE and RU control suffixes
	7010P	Rotation Sensor Kit	Models with R3 and RD control suffixes

© Copyright, Alliance Laundry Systems LLC – DO NOT COPY or TRANSMIT

Control Tray Wrap Components

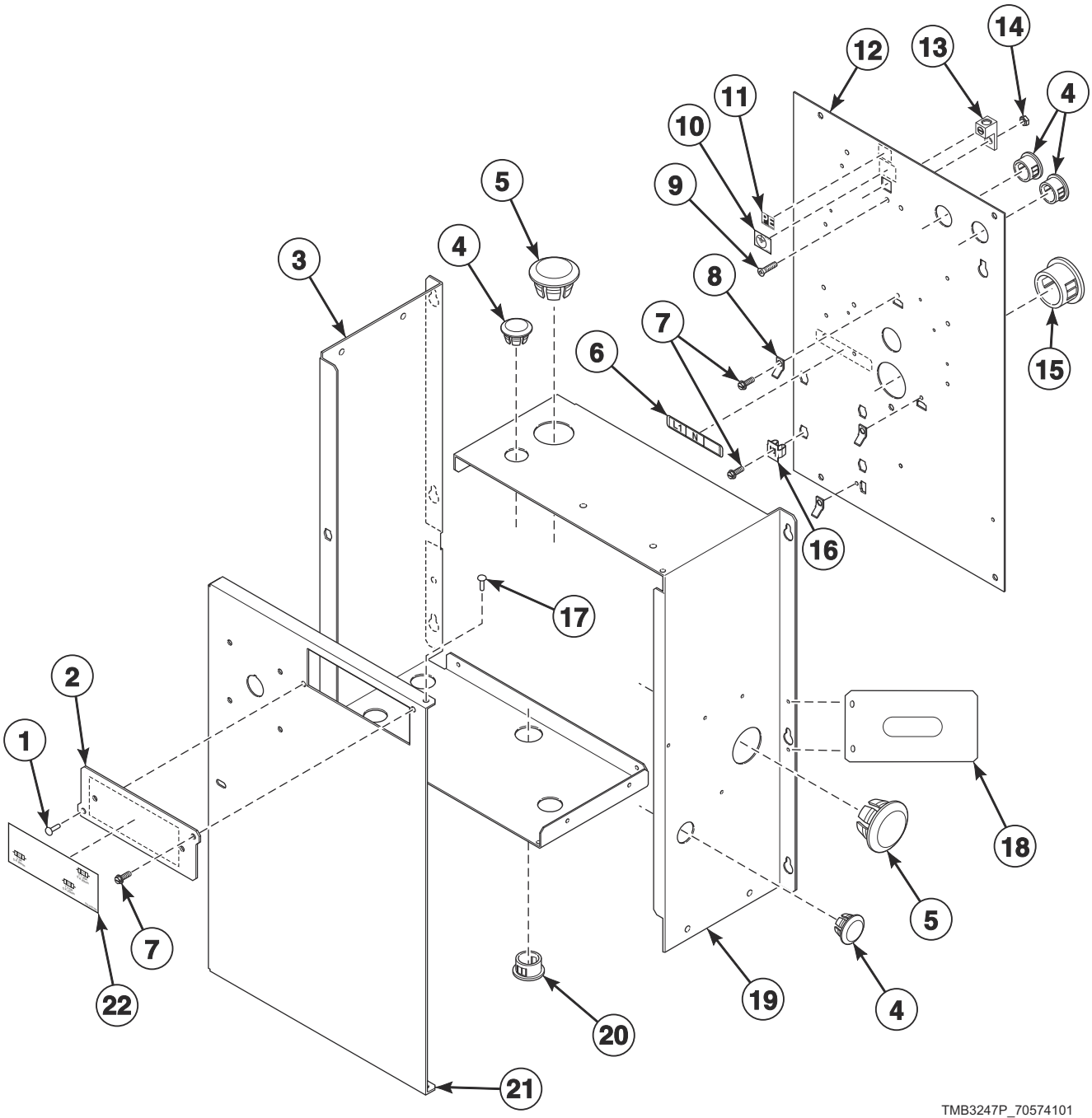

© Copyright, Alliance Laundry Systems LLC – DO NOT COPY or TRANSMIT

Control Tray Wrap Components

REF	PART NO.	DESCRIPTION	COMMENTS
	M414276	Mount Bracket	Used to mount items 3 and 19 to machine
1	70058501	Pop Rivet	
2	70313301	Fuse Cover	
3	44159001	Contactor Box Side	
4	M400985	Plug	3 required
5	F8223801	Hole Plug	2 required
6	70218801	Wire Label	L1, N
	70218701	Wire Label	L1, L2, L3
	70219001	Wire Label	L1, N, L2
7	F8206901	Screw	4 required
8	00177	Male Tab Terminal	3 required
9	F430909	Screw	
10	F230739	Ground Decal	
11	M412096	Earth Terminal Sticker	
12	44133701	Contactor Box Base	
13	M411283	Ground Lug Connector	
14	F430232	Nut	
15	M405340	Snap Bushing	
16	70030501	Expansion Clip	5 required
17	70058502	Pop Rivet	2 required
18	44175801	Pipe Bracket	
19	44158901	Contactor Box Side	
20	70178701	Snap Bushing	
21	44134001	Contactor Box Cover	Non-CE models
	44134002	Contactor Box Cover	CE models
22	70337301	Fuse Label	3 fuses
	70337201	Fuse Label	4 fuses; Models with less than 380 Volts
	70337401	Fuse Label	4 fuses; Gas models with 380 Volts or higher
	44338801	Fuse Label	4 fuses; Steam models with 380 Volts or higher

© Copyright, Alliance Laundry Systems LLC – DO NOT COPY or TRANSMIT

Control Tray Fuses

MODELS WITH LESS THAN 380 VOLTS/1 PHASE

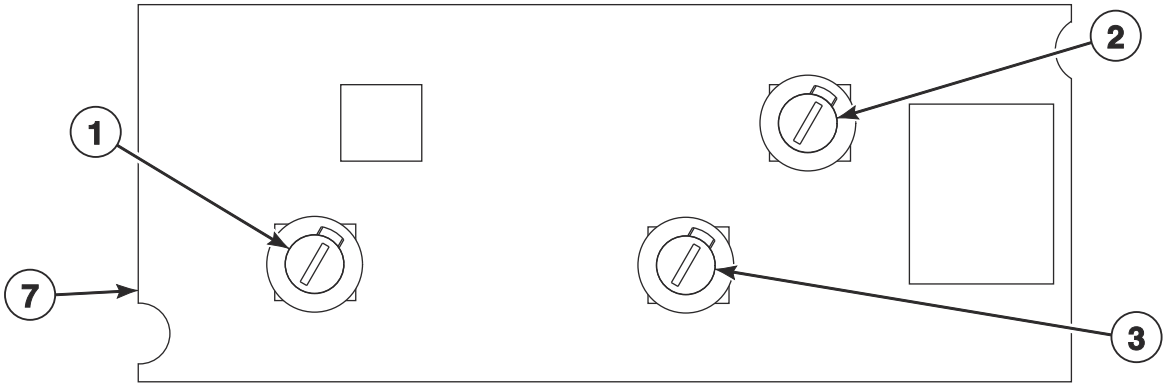

MODELS WITH LESS THAN 380 VOLTS/3 PHASE

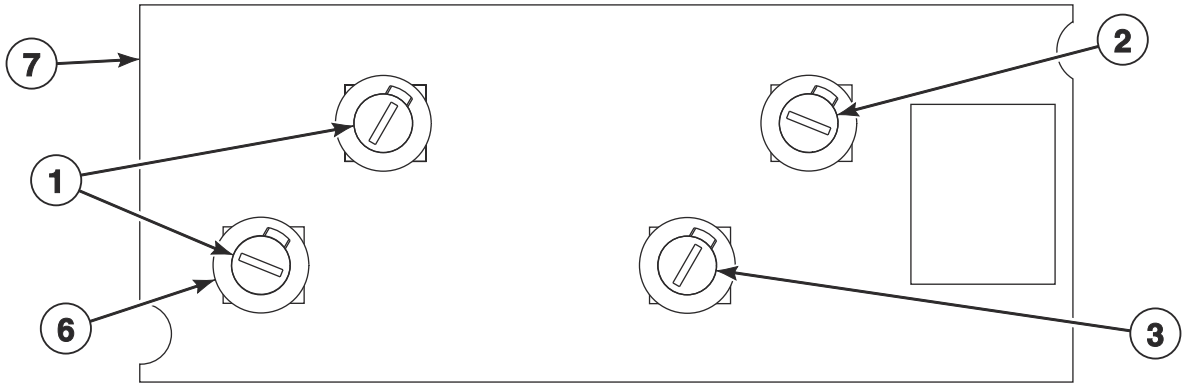

MODELS WITH 380 VOLTS OR HIGHER/3 PHASE

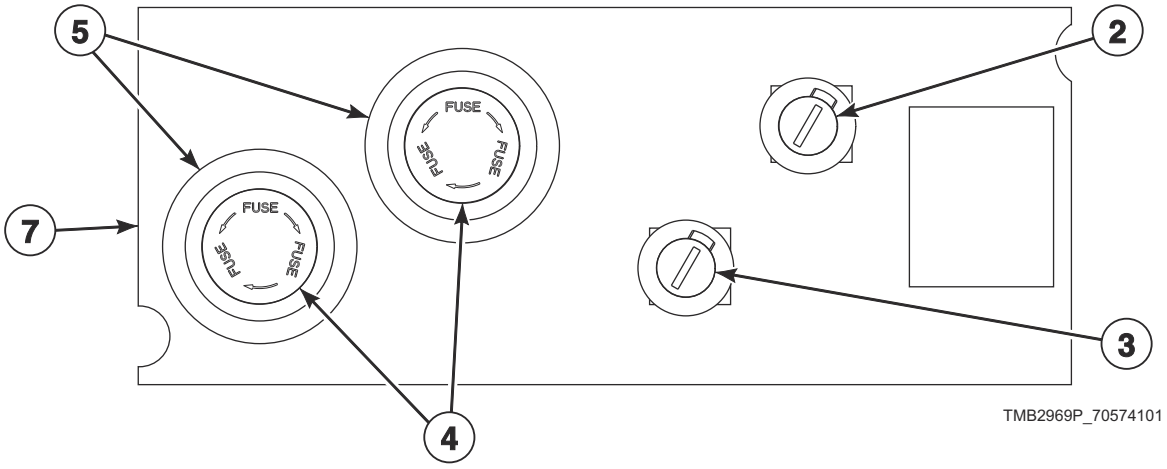

TMB2969P_70574101

© Copyright, Alliance Laundry Systems LLC – DO NOT COPY or TRANSMIT

Control Tray Fuses

REF	PART NO.	DESCRIPTION	COMMENTS
	44341301	Fuse Label	Steam models; 380-480 Volt
1	70406701	Fuse	2 Amp
2	70406501	Fuse	1.25 Amp
3	70406601	Fuse	3.5 Amp
4	44310001	Fuse	0.5 Amp; Gas models
	44310002	Fuse	1 Amp; Steam models
5	44155601P	Fuse Holder	
6	70329401P	Fuse Holder Body	
	70329501	Fuse Holder Cap	
7	70313602	Fuse Bracket	Models with 380 Volts or higher
	70306901	Fuse Bracket	Models with less than 380 Volts

© Copyright, Alliance Laundry Systems LLC – DO NOT COPY or TRANSMIT

Control Tray Harnesses

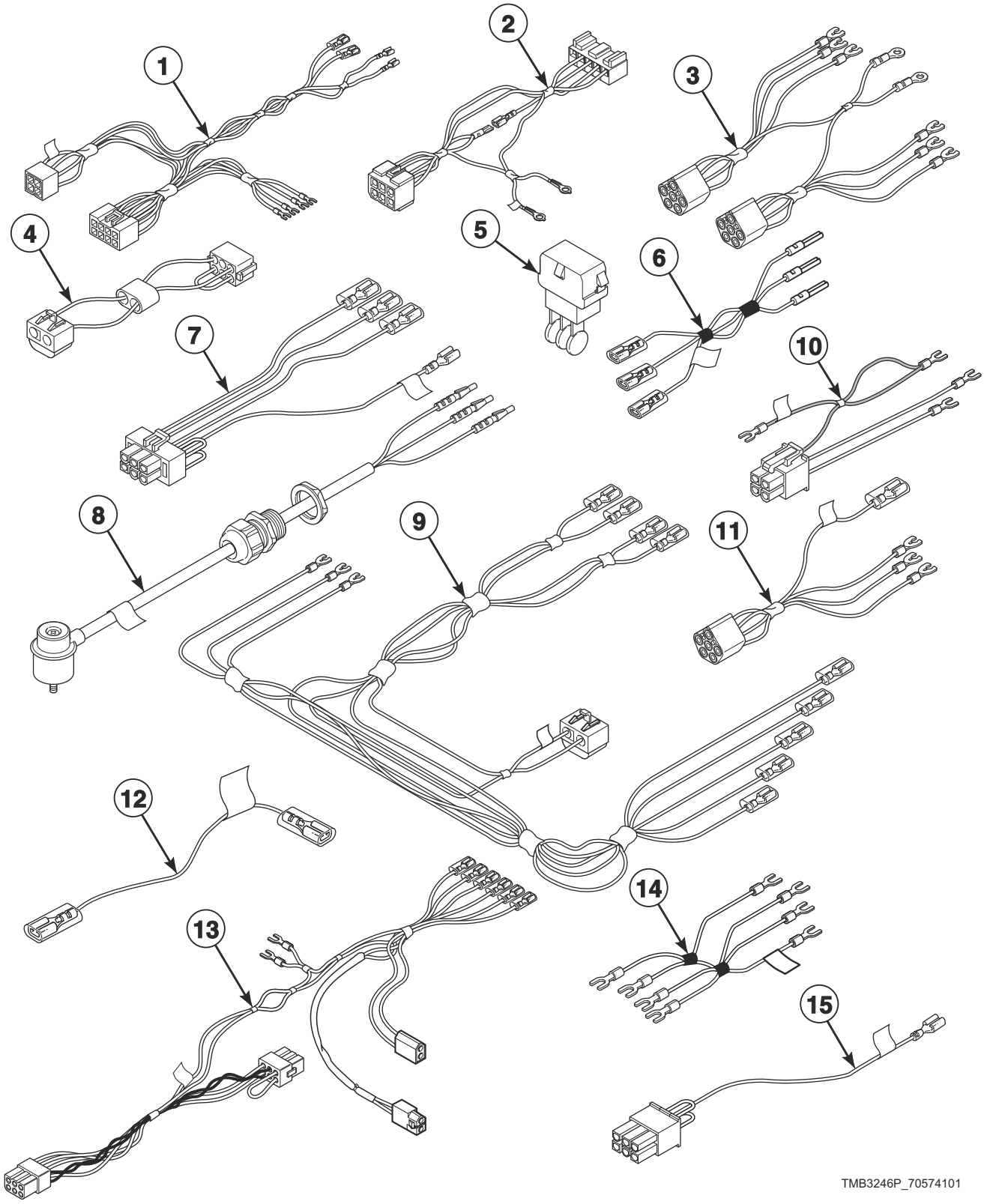

© Copyright, Alliance Laundry Systems LLC – DO NOT COPY or TRANSMIT

Control Tray Harnesses

REF	PART NO.	DESCRIPTION	COMMENTS
1	44136701P	Junction Box Harness	
2	44251601	Ignition Control Harness	Non-CE gas models
	44251701	Ignition Control Harness	CE gas models; Models with RE and RU control suffixes
	44251201	Ignition Control Harness	CE gas models; Models with all other control suffixes
3	44139901P	Motor Contactor Harness	1 Phase
	44142601P	Motor Contactor Harness	3 Phase
4	M413506	Jumper Harness Assembly	208 Volt
	M413507	Jumper Configuration Assembly	240 Volt
	M413508	Jumper Harness Assembly	380 Volt
	M413510	Jumper Configuration Assembly	480 Volt
5	M413863	Network Capacitor Assembly	
6	70342101	Gas Disconnect Harness	CE models
7	44143401P	Network Capacitor Harness Assembly	
8	44243601	Steam Valve Interface Harness	Steam models; Use with F8322901P Valve
9	44136201P	Power Harness	3 Phase models with 380 Volts or higher
	44136301P	Power Harness	3 Phase models with less than 380 Volts
	44139801P	Power Harness	1 Phase
10	44139601P	Reversing Contactor Harness	
11	44137001P	Motor Contactor Harness	3 Phase
	44136401	Motor Contactor Harness	1 Phase
12	70389901	Steam Stove Limit Bypass Harness	Steam models
13	44201201	Steam Relay Harness	Steam models; 24 Volt
	44243401	Steam Relay Harness	Steam models; Use with F8322901P Valve on 200-240 Volt models
	44243501	Steam Relay Harness	Steam models; Use with F8322901P Valve on 380-480 Volt models
14	44157401	Reversing Contactor Jumper Wire	1 Phase; Upper
	44139501	Reversing Contactor Jumper	1 Phase; Lower
	44136801	Reversing Contactor Jumper Assembly	Upper
	44136901	Reversing Contactor Jumper Assembly	Lower
15	44142801	Steam Configuration Harness	Steam models

© Copyright, Alliance Laundry Systems LLC – DO NOT COPY or TRANSMIT

Control Tray Components for Gas Models

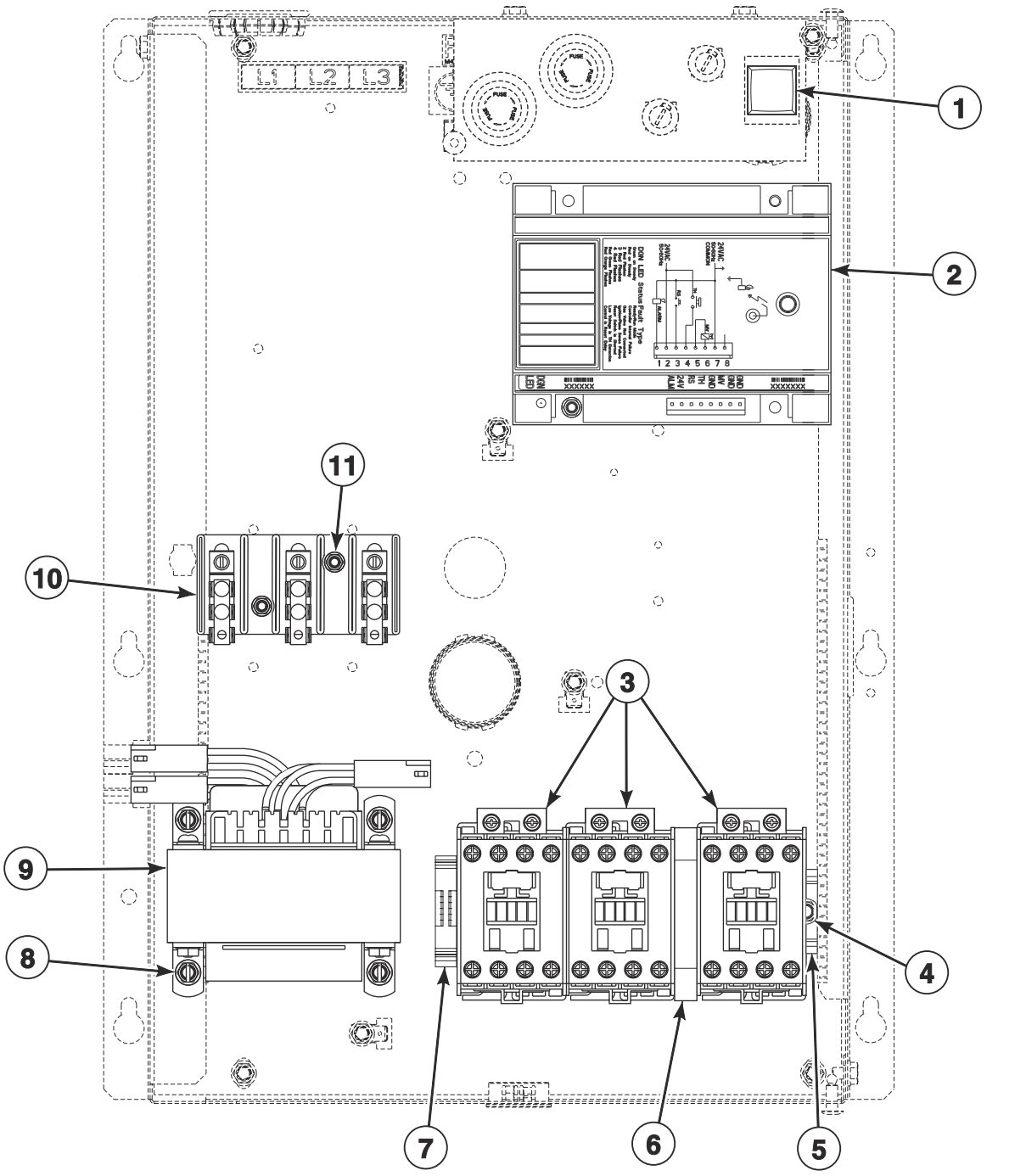

TMB3449P_70574101

© Copyright, Alliance Laundry Systems LLC – DO NOT COPY or TRANSMIT

Control Tray Components for Gas Models

REF	PART NO.	DESCRIPTION	COMMENTS
1	M413431	Pushbutton Switch	CE and Australian models
2	44264601	Ignition Control Kit	Non-CE and non-Australian models
	44264701	Ignition Control Kit	CE and Australian models
3	70323701P	Contactor	3 required
4	430497	Screw	2 required
5	M412693	Din Rail	
6	F330186P	Interlock Contactor	
7	70121001	End Stop	
8	M411072	Screw	4 required
9	M414228P	Transformer	Multitap; 100-240 Volt
	M414229P	Transformer	Multitap; 380-480 Volt
	44074401	Transformer	Dual secondary; 440 Volt
	M414230P	Transformer	Single secondary; 120 Volt
	M414312P	Transformer	Dual secondary; 120 Volt
10	430642	Terminal Block	Use 70333001 Terminal Block Shield to protect terminal block
11	51783	Screw	2 required

© Copyright, Alliance Laundry Systems LLC – DO NOT COPY or TRANSMIT

Control Tray Components for Steam Models

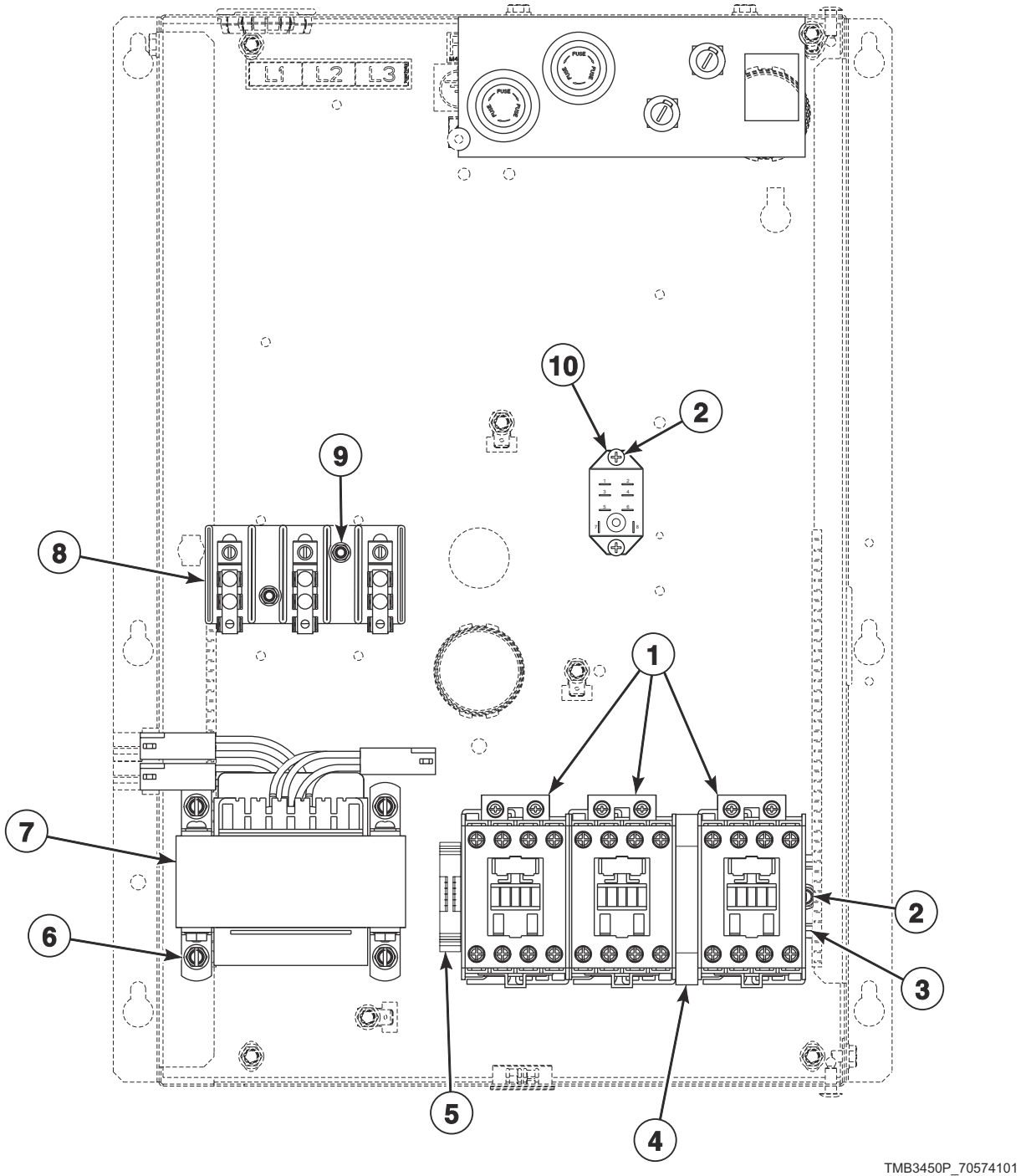

TMB3450P_70574101

© Copyright, Alliance Laundry Systems LLC – DO NOT COPY or TRANSMIT

Control Tray Components for Steam Models

REF	PART NO.	DESCRIPTION	COMMENTS
	M4984P3	Steam Kit	Includes item 10, 44201201 Steam Relay Harness and 2 of M405188 Screw
1	70323701P	Contactor	3 required
2	430497	Screw	2 required
3	M412693	Din Rail	
4	F330186P	Interlock Contactor	
5	70121001	End Stop	
6	M411072	Screw	4 required
7	M414228P	Transformer	Multitap; 100-240 Volt
	M414229P	Transformer	Multitap; 380-480 Volt
	44074401	Transformer	Dual secondary; 440 Volt
	M414230P	Transformer	Single secondary; 120 Volt
	M414312P	Transformer	Dual secondary; 120 Volt
8	430642	Terminal Block	Use 70333001 Terminal Block Shield to protect terminal block
9	51783	Screw	2 required
10	M412534	Relay	24 Volt

© Copyright, Alliance Laundry Systems LLC – DO NOT COPY or TRANSMIT

Notes

© Copyright, Alliance Laundry Systems LLC – DO NOT COPY or TRANSMIT

Parts Index

A

Access Panel
44012702P 33

Access Panel Trim
70399404 33

Actuator Arm Assembly
H96387501 67

Airflow Switch and Arm Bracket
70319602 61

Airflow Switch Arm
70319401 61

Airflow Switch Kit
70429601P 61

Airflow Switch Vane
70319201 61

B

Ball Bearing
H87672374 51
M401375P 57
M414367 51

Base Bracket
H96428693 ..... 53, 59

Base Harness
44227001 43

Bearing Mounting
H96428008 49

Bearing Retainer
M401370 57

Belt
F280362 51
44239801 57

Belt Adjustment Tube
H96428487 ..... 51, 53

Belt Guard
44159801 45
44253001 45
44253101 45
44253102 45

Belt Guard Side
44160001 45
44160101 45

Belt Set
H87533816P 51

Blower Cover
M414237 57

Bolt
44017901 41
44215501 47

Burner
M412025P 63

Burner Opening Cover
44249601 63

Burner Orifice
70684124 65
70684126 65
70684128 65
70684129 65
70684131 65
70684143 65
70684146 65
70684149 65
70684151 65
70684154 65

Bushing
H8752922HP 57
H8752985HP 51
M409844 69
M411537 ..... 43, 45
M412917P 57
M414459 67
44233801 59
44237801 59

Buzzer Kit
M4860P3 15

Bypass Harness
70364103 ..... 17, 19, 23, 25

C

Cable Tie
M405829 63

Circuit Board Support
D501523 27

Circuit Plug Housing, 1
44370401 55

Clevis Pin
44091501 67

Clip
M400976 45
M400984 45

Coil Filter
H96362264 ..... 67, 69

Contact Base
F8538101 ..... 17, 23, 25

Contact Block Switch
F200233400 ..... 17, 25
F200233401 23

Contact Switch
F8069501 ..... 17, 23, 25

Contactor
70323701P 81, 83

Contactor Box Base
44133701 75

Contactor Box Cover
44134001 75
44134002 75

Contactor Box Side
44158901 75
44159001 75

Control
44063801P 27

Control Assembly
D512202P 17
70434101P 23, 25
70437102P 23
70437103P 23
70437104P 23

N/A items do not appear in index.

© Copyright, Alliance Laundry Systems LLC – DO NOT COPY or TRANSMIT

70437105P 23
70454001P 25
70454101P 23
70462307P 19
70503101P 15
70503702P 23
Control Box
44161001 13
Control Box Base
44065301 27
Control Box Cover
44065201 27
Control Box Housing
44065101 27
Control Box Top
44065401 27
Control Chassis Mounting Bracket
70357901 17
Control Cover
44013307* 17, 21, 25
44013308 ..... 21, 25
44013311* 17, 21, 25
44013315DG 21
44013316DG 21
44013317 ..... 17, 21, 25
44013319 ..... 17, 21, 25
44111701* 19, 25
44111703* 25
44111705* 19, 25
44111713LG 17, 21, 25
44111714LG 17
44111715LG 17, 21, 25
44111716LG 17
44111717 19
44111719 19
Control Harness
44100101P 15
44162601 27
Control Housing Cover
44161101 13
Control Mounting Bracket
44099501W 21, 25
44099501* 15
44099502 ..... 15, 21, 25
44099504DG 21
44099504LG 15, 21, 25
44099505 ..... 15, 21, 25
Control Panel Harness
44240301 ..... 21, 25
70367001P 15
70485301 19
70489901 19
Control Plate and Studs Assembly
44099201 15
44185701 23
Control Plate Assembly
44038601 19
44224601 25
Control Trim
44016401 ..... 17, 21
44016402 ..... 17, 21
Cylinder and Trunnion Assembly
44214901 47
44214902 47
44221601 47
44221602 47
Cylinder Assembly
44215001 47
44215002 47
44221501 47
44221502 47
Cylinder Motor Harness
44162901 53
Cylinder Rib Assembly
44191205 47

D

Damper Assembly
H96367685 67
Damper Bracket
M414801 ..... 67, 69
Damper Counterweight
M413331 67
Damper Motor
M412905P 67
M413592P 67
Damper Rod
M413401 45
Damper Shaft
H96368956 67
Damper Vane
M413402 45
Din Rail
M412693 ..... 81, 83
DIN Valve Apapter Kit
F8382301 71
Display Assembly
D512218P 15
Door Assembly
44215801 35
44248001 35
44248201 35
44272201 35
44294501B 35
44294501LG 35
70407402P 35
Door Glass
44008401P 37
44008402P 37
Door Glass Installation Tool
M4221P4 37
Door Handle
44007901 37
44057702 37
44263801 37
Door Hinge
44075207B 39
Door Hinge Assembly
44218701* 39
44218703LG 39
44218704 39
Door Hinge Lug Assembly
44035001 29
44035002 ..... 29, 39
44218101 39
Door Latch
M401223 29
Door Latch Bracket
44219701 37

N/A items do not appear in index.

© Copyright, Alliance Laundry Systems LLC – DO NOT COPY or TRANSMIT

Door Latch Magnet
44220501 29
Door Ring
44215701 37
44215703 37
Door Ring and Handle Assembly
44294601B 37
44294601LG 37
Door Ring Assembly
44217502 37
44326003B 37
44326004B 37
44326004HG 37
Door Ring Gasket
44217401 37
Door Seal Kit
70211902P 37
Door Switch
44018201 29
Door Switch Actuator Kit
70215001P 39
Door Switch Cover
44001301 29
Door Switch Harness
44227101 29
Door Switch Harness Channel
44231401 29
Drive Chain
H96388186 67
Drive Motor
44263401 53
Drive Rivet
M400713 ..... 15, 27
Drive Wheel
H96388178 67

E

Earth Terminal Sticker
M412096 75
Emergency Stop Contact Harness
70364105P 17
Emergency Stop Harness
70364106P 17, 23, 25
Emergency Stop Label
44012901 ..... 17, 23, 25
Emergency Stop Pushbutton
F200233500 ..... 17, 23, 25
End Stop
70121001 ..... 81, 83
Ethernet Gateway Kit
NK320 25
Exhaust Duct Box Wrap
M412391 45
Expansion Clip
70030501 ..... 15, 21, 23, 25, 75

F

Fan
H96368469 57
Fan Bearing Bracket
M414235 57
Fan Motor
44313501P 59
Fan Motor Harness
44242601 59
Ferrite Core Assembly
M413930P 19
Fill Hose
F200116 27
Fill Hose Kit
38349P 27
Filter
44172101 ..... 67, 69
Filter Channel
44045101 ..... 67, 69
Flange Bearing
44048301P 49
Front Access Panel
44012701*P 33
44012707*P 33
44012709B 33
44012709LG 33
44012712DG 33
44012713 33
44012714 33
Front Access Panel and Door Hinge Kit
M4787P3 ..... 33, 39
Front Panel
44078103 31
44218403LG 31
44218404 31
44218406DG 31
44218406W 31
44218407 31
44218408 31
Fuse
44310001 77
70406501 77
70406601 77
70406701 77
Fuse Bracket
70306901 77
70313602 77
Fuse Cover
70313301 75
Fuse Holder
44155601P 77
Fuse Holder Body
70329401P 77
Fuse Holder Cap
70329501 77
Fuse Label
44338801 75
44341301 77
70337201 75
70337301 75
70337401 75

G

Gas Disconnect Harness
70342101 79

N/A items do not appear in index.

© Copyright, Alliance Laundry Systems LLC – DO NOT COPY or TRANSMIT

Gas Stove Assembly
44243901 63
Gas Valve
44227201 63
44227202 63
Gas Valve Bracket
44245701 63
Gas Valve Harness
70184001 63
Graphic Overlay
44240501 19
Ground Decal
F230739 75
Ground Lug Connector
M411283 75
Guard Extension
44222501 45

H

Hairpin Cotter
44091601 67
Handle and Caps Assembly
44049903 41
44049904 41
Handle Bar
70399501B 37
Handle Bumper
70407204 41
70407212 41
Harness Strap
55881 29
High Voltage Suppression Cable
44239703 63
Hinge Cam Kit
M4772P3 39
M4773P3 39
Hole Plug
F8223801 75
Hose
44073303 27
Hose Clamp
20391 63
36801 27
Hose Fitting
44069101 27

I

Idler Housing
M412612 57
Idler Housing Assembly
M412630 57
Idler Shaft
M414241 57
Igniter Cover
70159601 63
Ignition Control
70458601P 63
70483201P 63
Ignition Control Harness
44251201 79
44251601 79
44251701 79
Ignition Control Kit
44264601 81
44264701 81
Insulation
M413538 45
Interlock Contactor
F330186P 81, 83

J

Jackshaft Assembly
H96357751 51
Jumper Calibration Wire
70324604 ..... 15, 23, 25
Jumper Configuration Assembly
M413507 79
M413510 79
Jumper Harness Assembly
M413506 79
M413508 79
Junction Box Harness
44136701P 79

K

Key
H8752006H 53
M400993 57
M401327 57
70155601 27
Kickplate
70117611 41
70117612 41

L

Label
44190901 29
70414001 33
70537001 29
70537101 29
Light
801432 27
Limit Thermostat
M411403 57
M411946 57
70299001 63
Lint Panel
44012301*P 41
44012302P 41
44012303LG 41
44012304DG 41
44012306 41
44012307 41
Lint Panel Clip
44017801 41
Lint Panel Switch Bracket
44013401 43

N/A items do not appear in index.

© Copyright, Alliance Laundry Systems LLC – DO NOT COPY or TRANSMIT

Lint Panel Switch Cover
44026801 43
Lint Screen
44063603P 45
44077703P 45
Loading Spring
M400401 57
Lock, Key and Nut Kit
44089301P 27
L.P. Conversion Kit
44240402P 63
44257701 63
L.P. Valve Conversion Kit
44240401P 63

M

Main Harness
44226901 13
44251501 13
Male Tab Terminal
00177 ..... 19, 75
Manifold
44079603 27
Manifold End Bracket
44173801 63
Manual Reset Thermostat
M413989 63
44253901 63
Master Link
H96382072P 67
Mixing Valve
36958P 27
Mixing Valve Shield Bracket
44065701 27
Moisture Sensing Harness Kit
44344703 55
Moisture Sensor Harness Assembly
44209201 55
Moisture Sensor Test Wires
70468901 55
Motor
44046601P 59
44313601 59
Motor Base
M413171 59
44253301 53
Motor Bracket
H96388145 67
Motor Contactor Harness
44136401 79
44137001P 79
44139901P 79
44142601P 79
Mount Bracket
M414276 75

N

Nameplate
B12389801 33
F8443102 33
44010401 33
44010601 33
70243901 33
70348501 33
70509601 33
70522001 33
Nameplate Overlay
44144401 37
44235401 33
44331401 33
70128901 33
70410201 33
70411401 37
Network Capacitor Assembly
M413863 79
Network Capacitor Harness Assembly
44143401P 79
Network Controller Kit
NK220 25
Network Retrofit Kit
NK209 25
Nut
F430232 75
H88412101 ..... 47, 49, 51, 53, 59
M400033 55
M400977 ..... 17, 21, 33
M412334 47
M412986 53
M414215 37
02788 29
20274 ..... 49, 51, 59
23951 ..... 39, 45, 67, 69
24205 15
29786 ..... 29, 59, 67, 69
29787 ..... 15, 19
44071201 37
44087101 41
70030401 ..... 29, 33
70054 ..... 15, 19, 21, 25, 41, 45
70142 ..... 53, 59, 67

O

Output Bracket
44223101 21
44223201 25
44223401 25
Output Harness
44186101 ..... 21, 25
Overlay
70362202 15
70362402 15
70362502 15
70432201 25
70445002 21
70445004 21
70462401 21
70462701 21
70462901 21
70472201 21
70472401 21
70493701 21
70494002 15
70499001 25
70504702 15
70504901 21

N/A items do not appear in index.

© Copyright, Alliance Laundry Systems LLC – DO NOT COPY or TRANSMIT

70508601 21
70526001 21

P

Panel Locator
56079 15
Pipe Bracket
44175801 75
44249301 63
Pipe Cap
44087801 63
Pipe Elbow
44249401 63
Pipe Nipple
44249501 63
44252301 63
44252401 63
Pipe Union
M411419 63
Plug
M400985 75
Pop Rivet
430725 ..... 23, 25, 43
44166601 29
70058501 ..... 39, 75
70058502 75
70126301 ..... 37, 41
70126401 41
Porcelain Touch-Up Paint
122P4P 29
370P4P 29
Power Harness
44136201P 79
44136301P 79
44139801P 79
Pulley Bushing
F280297 53
Pushbutton Switch
M413431 81
Push-to-Start Switch
801434W 27

R

Relay
M412534 ..... 19, 83
Relay/Buzzer Bracket
44041701 19
Retaining Ring
H88602263 51
H88603477 51
Reversing Contactor Harness
44139601P 79
Reversing Contactor Jumper
44139501 79
Reversing Contactor Jumper Assembly
44136801 79
44136901 79
Reversing Contactor Jumper Wire
44157401 79
Rib Wire
44208101 55
Rocker Switch
44099601 15
70455101 15
70461301 15
Rod End
44048501 ..... 51, 53, 59
Roll Pin
H88970256 67
Roller Catch
H87020202 ..... 41, 45
Roller Catch Mounting Bracket
44014001 41
Rotation Sensor
F8066201 73
Rotation Sensor Bracket
44111101 73
Rotation Sensor Harness
44201701 73
Rotation Sensor Kit
7010P 19, 73

S

Screw
D501086 ..... 19, 41, 67, 69
D501524 ..... 21, 23, 25
F430116 57
F430909 75
F8206901 75
H88010038 59
H88010574 67
H88012034 49
H88213996 49
M400044 ..... 39, 45
M400056 ..... 53, 59
M400063 ..... 51, 53
M400661 37
M402574 29
M405188 67
M411072 ..... 45, 81, 83
M411165 49
02422 ..... 67, 69
22688 ..... 51, 59
38272 63
430497 ..... 15, 27, 43, 45, 61, 63, 69, 81, 83
430757 41
431287 29
44023301 29
44161501 59
44338901 55
51780 ..... 27, 63
51782 63
51783 ..... 63, 81, 83
61199 ..... 37, 41, 45, 67
70033504 ..... 29, 39
70182601 ..... 29, 33
70187202 57
70409801 39
70442101 39
800930 ..... 15, 17, 21, 23, 25
801019 ..... 67, 69
Security Cover Kit
M4795P3W 15, 17

N/A items do not appear in index.

© Copyright, Alliance Laundry Systems LLC – DO NOT COPY or TRANSMIT

Sensor Harness Assembly
44166801 27
Shaft Collar
M414451 67
Sheave
H8752026H 51
H87520334 51
H8752060H 57
H8752065H 57
H8752251H 51
44255101 59
44255201 59
44264301 53
44270801 53
Sleeve
44050601 19
Slip Ring Assembly
44222702 55
Snap Bushing
M400770 29
M405340 75
44071501 63
70178701 ..... 27, 75
Solenoid Valve DIN Connector
70370301P 71
Spacer
M401402 ..... 47, 49
431264 ..... 23, 25
Spark Electrode
44328701P 63
Spray Paint
298P4P 29
381P4 29
382P4 29
Spring Pin
H88900683 67
Spud Holder Weldment
44390002 63
Steam Coil
M409833P 67, 69
M409834P 67, 69
Steam Coil Housing Cover
44018501 67
Steam Coil Housing End
44115001 69
Steam Coil Support
M412201 ..... 67, 69
Steam Configuration Harness
44142801 79
Steam Cover
44114601 69
44115201 67
Steam Damper Actuator
44096501 67
Steam Filter Top Hinge Assembly
44088101 ..... 67, 69
Steam Heater Assembly
M414485 67
M414490P 67
44114801 69
Steam Kit
M4984P3 83
Steam Relay Harness
44201201 79
44243401 79
44243501 79
Steam Solenoid
70351011P 71
70351012 71
Steam Stove Limit Bypass Harness
70389901 79
Steam Valve
F8322903 71
Steam Valve Interface Harness
44243601 ..... 67, 69, 79
Steam Valve Rebuild Kit
70351021P 71
Step Pulley and Bearing Kit
M4696P3 51
Stove Limit Harness Bracket
431078 63
Stove Limit Thermostat
431177 63
Switch
70411901 61
Switch Assembly
70413401 43
Switch Bracket
70356301 61
Switch Plate
M413236 15

T

Temperature Knob
44104601 15
Temperature Selector Switch
D511711 15
Temperature Selector Switch Bracket
70391701 15
Terminal Block
430642 ..... 81, 83
Thermistor
M414704 45
44064701 27
Thermistor Bracket Assembly
44051301 45
Thermostat
H8900530H 57
Thermostat Cover
M414477 63
Top Access Panel Gusset
44028301DG 33
44028301LG 33
44028301* 33
44028302LG 33
44028302* 33
Transformer
M414228P 81, 83
M414229P 81, 83
M414230P 81, 83
M414312P 81, 83
44074401 ..... 81, 83
Trunnion Assembly
44240801 47
44240802 47

N/A items do not appear in index.

© Copyright, Alliance Laundry Systems LLC – DO NOT COPY or TRANSMIT

U

USB Gateway Kit
NK330 25
USB IR Interface Kit
203346 ..... 21, 25

V

Valve
F8322901P 71
F8322906P 71
Valve Coil
F8514801 71
Valve Kit
F8521701 71
Valve Rebuild Kit
F8379502 71

W

Washer
M400013 ..... 53, 59, 67
M400014 ..... 51, 53, 57, 59
M400015 ..... 49, 51, 53
M400080 ..... 53, 57, 59
M400081 51
M405535 41
03815 ..... 15, 17, 21, 25
44238902 55
70261401 ..... 47, 49, 51, 53, 59
70409301 37
800465 ..... 29, 67
Wire Label
70218701 75
70218801 75
70219001 75
Wireless Network Kit
NK309 25

N/A items do not appear in index.

© Copyright, Alliance Laundry Systems LLC – DO NOT COPY or TRANSMIT