Tumble Dryers

30 Pound Capacity

18 Digit Model Numbers with 3 and 5 in 13th Position

Refer to Page 5 for Model Numbers

Parts

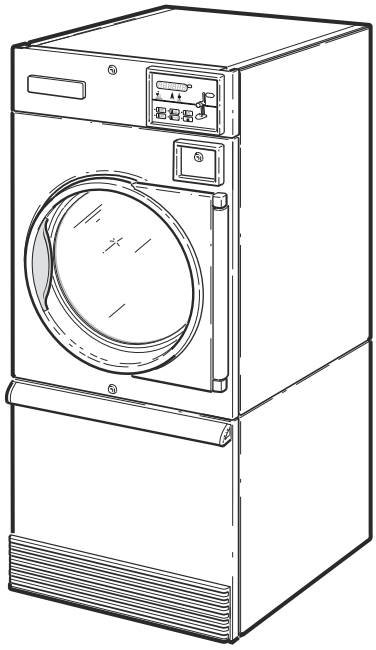

TMB1283C_70591301

Alliance™ Laundry Systems

www.alliancelaundry.com

Part No. 70591301R11
May 2025

Table of Contents

Title	Page
Parts Ordering Information	3
Serial Plate Location	3
Machine Identification	5
Product Overview - Heat Source and Voltage	6
Product Overview - FN Control Suffix	8
Product Overview - DN and NN Control Suffixes	10
Product Overview - B, N and W Control Suffixes	12
Dual Digital Control	14
Electronic Display Control - Vend Models with B in the 7th Position	16
Electronic Display Control - Vend Models with N or W in the 7th Position	18
Electronic Display Control Overlays - Vend Models with N or W in the 7th Position	20
Electronic Display Control - OPL Models with N in the 7th Position	22
3.5 Inch Graphical Control	24
Coin Drops	26
Coin Drop Kits	28
Network Board, Central Pay and Card Reader Components	30
Door Assemblies	32
Door Components	34
Hinge Components - Design 3 Models	36
Hinge Components - Design 5 Models	38
False Fronts	40
Control Panels	42
Control Panels - Design 5 S Models	44
Front Panel Assemblies - Design 3 Models	46
Front Panel Assemblies - Design 5 Models	48
Cabinet Front Components	50
Emergency Stop Button - OPL Models	52
Lower Cabinet Components	54
Lower Cabinet Components - S Models with Hinged Lint Door	56
Cylinder and Trunnion Assembly	58
Moisture Sensing Components	60
Cylinder Components	62
Cabinet Components	64
Fire Suppression System Components	66
Fire Suppression System Control Box	68
Motor Components	70
Blower and Exhaust Components	72
Airflow Switch	74
Gas Heater Components	76
Burner Orifices	78
Electric Heater Components	80

© Copyright 2025, Alliance Laundry Systems LLC

All rights reserved. No part of the contents of this book may be reproduced or transmitted in any form or by any means without the expressed written consent of the publisher.

Steam Heater Components 82
Control Tray 84
Accessory Box - Electric 200-240 Volt Models 86
Accessory Box - Electric 380-480 Volt Models 88
Harnesses 90
Labels 91
Parts Index 93

© Copyright, Alliance Laundry Systems LLC – DO NOT COPY or TRANSMIT

Parts Ordering Information

If literature or replacement parts are required, contact the source from whom the machine was purchased or contact Alliance Laundry Systems at (920) 748-3950 for the name and address of the nearest authorized parts distributor.

For technical assistance, call the number listed below:

(920) 748-3121 Ripon, Wisconsin

Serial Plate Location

When calling or writing about your product, be sure to mention model and serial numbers. Model and serial numbers are located on serial plate(s) as shown.

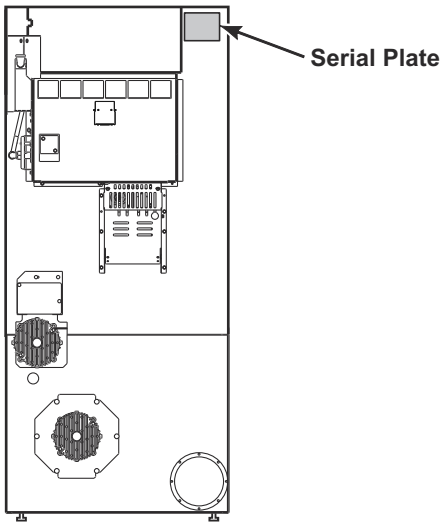

TMB3500P_70591301

© Copyright, Alliance Laundry Systems LLC – DO NOT COPY or TRANSMIT

Notes

© Copyright, Alliance Laundry Systems LLC – DO NOT COPY or TRANSMIT

Machine Identification

Information in this manual is applicable to these machines:

BA030E
BA030F
BA030L
BA030N
BA030R
BA030S
BG030D
BG030E
BG030F
BG030L
BG030N
BG030R
BG030S
BH030E
BH030F
BH030L
BH030N
BH030R
BH030S
BJ030D
BJ030E
BJ030F
BJ030L
BJ030N
BJ030R
BJ030S
BK030E
BK030F
BK030L
BK030N
BK030R
BL030E
BL030L
BR030E
BR030S
BU030E
BU030F
BU030L
BU030N
BU030R
BU030S

HA030E
HA030F
HA030L
HA030N
HA030R
HA030S
HG030D
HG030E
HG030F
HG030L
HG030N
HG030R
HG030S
HH030E
HH030F
HH030L
HH030N
HH030R
HH030S
HJ030D
HJ030E
HJ030F
HJ030L
HJ030N
HJ030R
HJ030S
HK030E
HK030F
HK030L
HK030N
HK030R
HL030E
HL030L
HR030E
HR030S
HT030E
HT030F
HT030L
HT030N
HT030R
HT030S
HU030E
HU030F
HU030L
HU030N
HU030R
HU030S

JU030E
JU030N
PA030E
PA030L
PA030N
PA030S
PG030E
PG030L
PG030N
PG030S
PH030E
PH030L
PH030N
PH030S
PJ030E
PJ030L
PJ030N
PJ030S
PK030E
PK030L
PK030N
PL030E
PL030L
PR030E
PR030S
PT030E
PT030L
PT030N
PT030S
PU030E
PU030L
PU030N
PU030S

SA030E
SA030F
SA030L
SA030N
SA030R
SA030S
SG030D
SG030E
SG030F
SG030L
SG030N
SG030R
SG030S
SH030E
SH030F
SH030L
SH030N
SH030R
SH030S
SJ030D
SJ030E
SJ030F
SJ030L
SJ030N
SJ030R
SJ030S
SK030E
SK030F
SK030L
SK030N
SK030R
SL030E
SL030L
SR030E
SR030S
ST030E
ST030F
ST030L
ST030N
ST030R
ST030S
SU030E
SU030F
SU030L
SU030N
SU030R
SU030S

UA030E
UA030F
UA030L
UA030N
UA030R
UA030S
UG030D
UG030E
UG030F
UG030L
UG030N
UG030R
UG030S
UH030E
UH030F
UH030L
UH030N
UH030R
UH030S
UJ030D
UJ030E
UJ030F
UJ030L
UJ030N
UJ030R
UJ030S
UK030E
UK030F
UK030L
UK030N
UK030R
UL030E
UL030L
UR030E
UR030S
UT030E
UT030F
UT030L
UT030N
UT030R
UT030S
UU030E
UU030F
UU030L
UU030N
UU030R
UU030S

© Copyright, Alliance Laundry Systems LLC – DO NOT COPY or TRANSMIT

Product Overview - Heat Source and Voltage

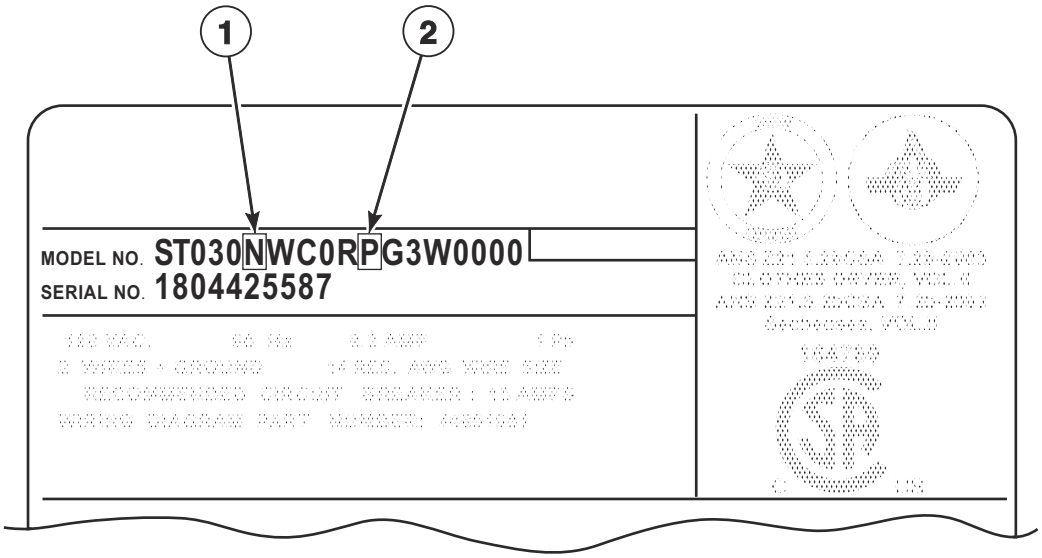

TMB3525P_70591301

© Copyright, Alliance Laundry Systems LLC – DO NOT COPY or TRANSMIT

Product Overview - Heat Source and Voltage

REF	PART NO.	DESCRIPTION	COMMENTS
1	-	Heat Source	D: Liquid Petroleum Gas (L.P) E: Electric F: Reduced Electric (Eco Line) L: Liquid Petroleum Gas (L.P.) N: Natural Gas (N.G.) R: Reduced Gas, Natural Gas (Eco Line) S: Steam
2	-	Voltage	B: 100-120 Volt/50-60 Hertz/1 Phase; Gas and steam models D: 200-208 Volt/50-60 Hertz/1 Phase; Electric models E: 230-240 Volt/50-60 Hertz/1 Phase; Electric models F: 200-208 Volt/50-60 Hertz/3 Phase; Electric models G: 230-240 Volt/50-60 Hertz/3 Phase; Electric models H: 380 Volt/50-60 Hertz/3 Phase; Electric models J: 400-415 Volt/50-60 Hertz/3 Phase; Electric models K: 440 Volt/50-60 Hertz/3 Phase; Electric models L: 460-480 Volt/50-60 Hertz/3 Phase; Electric models N: 440-480 Volt/50-60 Hertz/3 Phase; Gas and steam models P: 380-415 Volt/50-60 Hertz/3 Phase; Gas and steam models X: 200-240 Volt/50-60 Hertz/1-3 Phase; Gas and steam models

© Copyright, Alliance Laundry Systems LLC – DO NOT COPY or TRANSMIT

Product Overview - FN Control Suffix

OPL

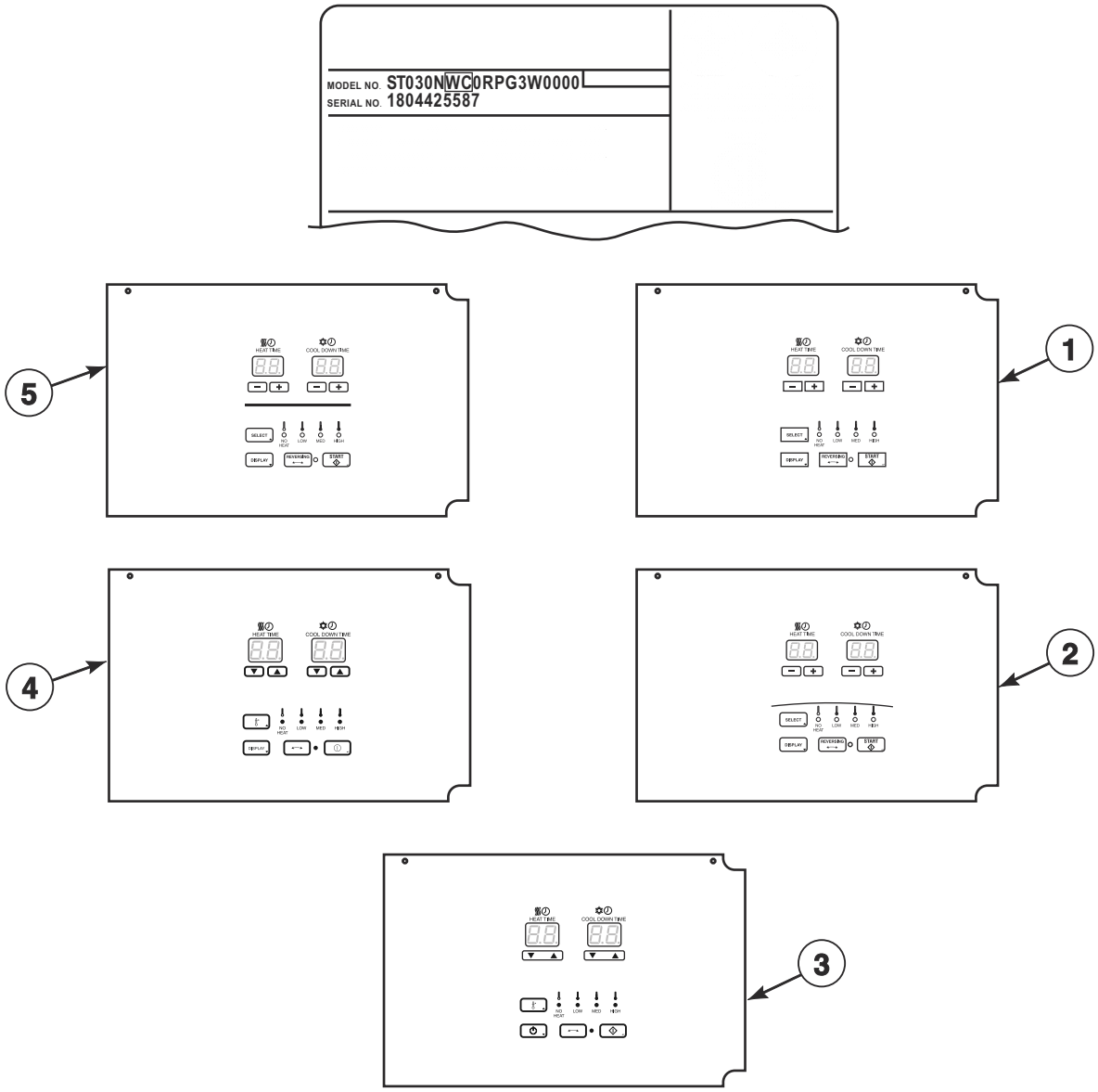

TMB3649P_70591301

© Copyright, Alliance Laundry Systems LLC – DO NOT COPY or TRANSMIT

Product Overview - FN Control Suffix

REF	PART NO.	DESCRIPTION	COMMENTS
1	-	Dual Digital Control	H models
2	-	Dual Digital Control	U models
3	-	Dual Digital Control	B models
4	-	Dual Digital Control	P models
5	-	Dual Digital Control	S models

© Copyright, Alliance Laundry Systems LLC – DO NOT COPY or TRANSMIT

Product Overview - DN and NN Control Suffixes

OPL

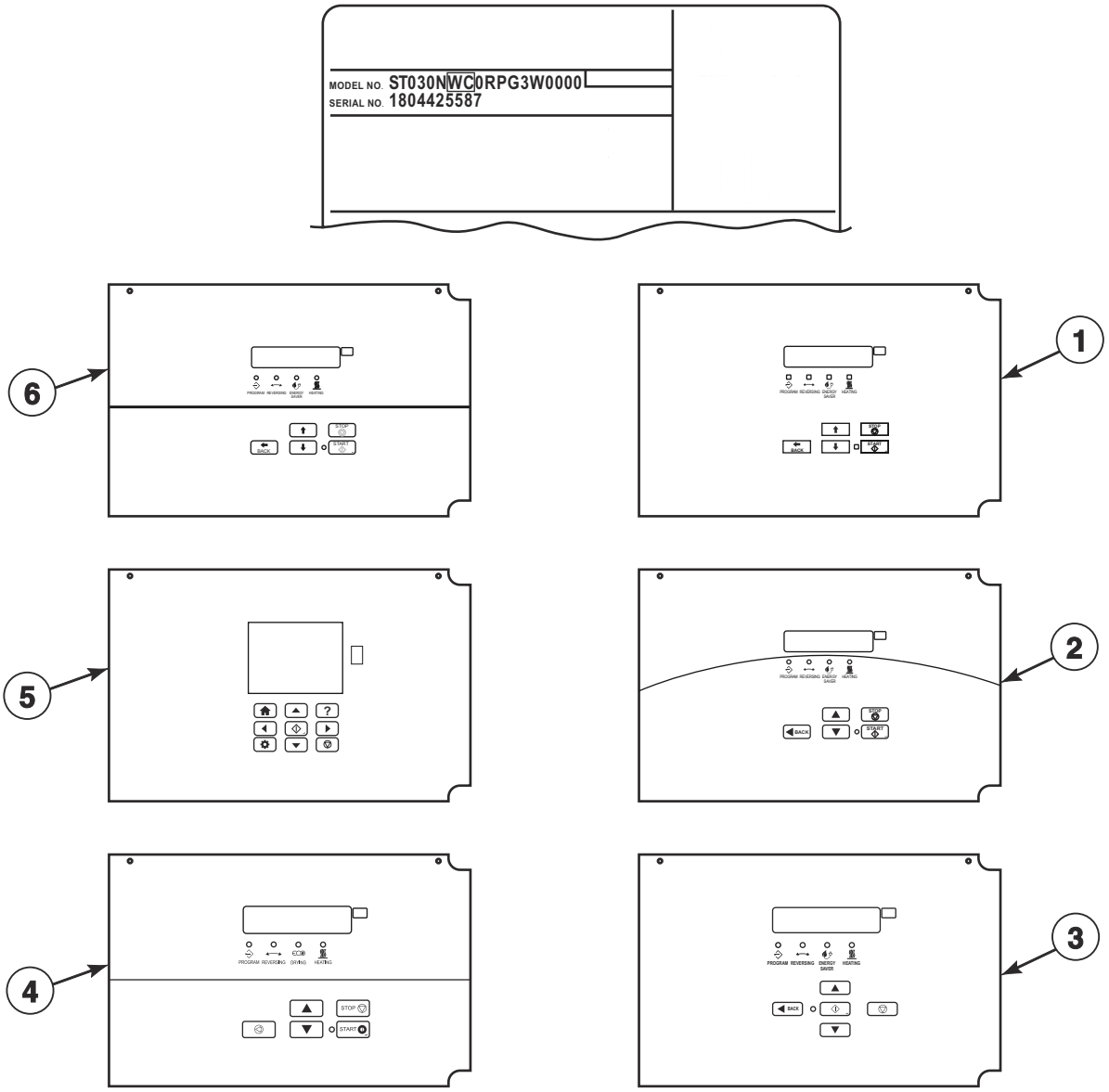

TMB3650P_70591301

© Copyright, Alliance Laundry Systems LLC – DO NOT COPY or TRANSMIT

Product Overview - DN and NN Control Suffixes

REF	PART NO.	DESCRIPTION	COMMENTS
1	-	Galaxy Control	H models
2	-	M-Series Control	U models
3	-	OPTimum Control	B models
4	-	OPL Micro Control	P models
5	-	UniLinc Control	U models
6	-	Quantum Gold Control	S models

© Copyright, Alliance Laundry Systems LLC – DO NOT COPY or TRANSMIT

Product Overview - B, N and W Control Suffixes

7th Position of the Model Number; Vend

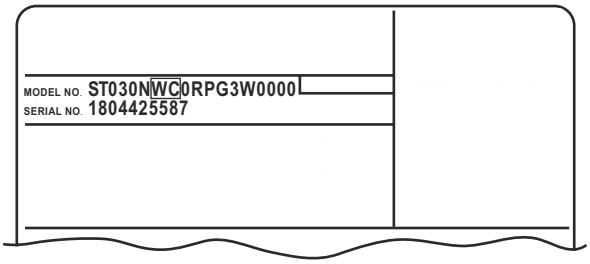

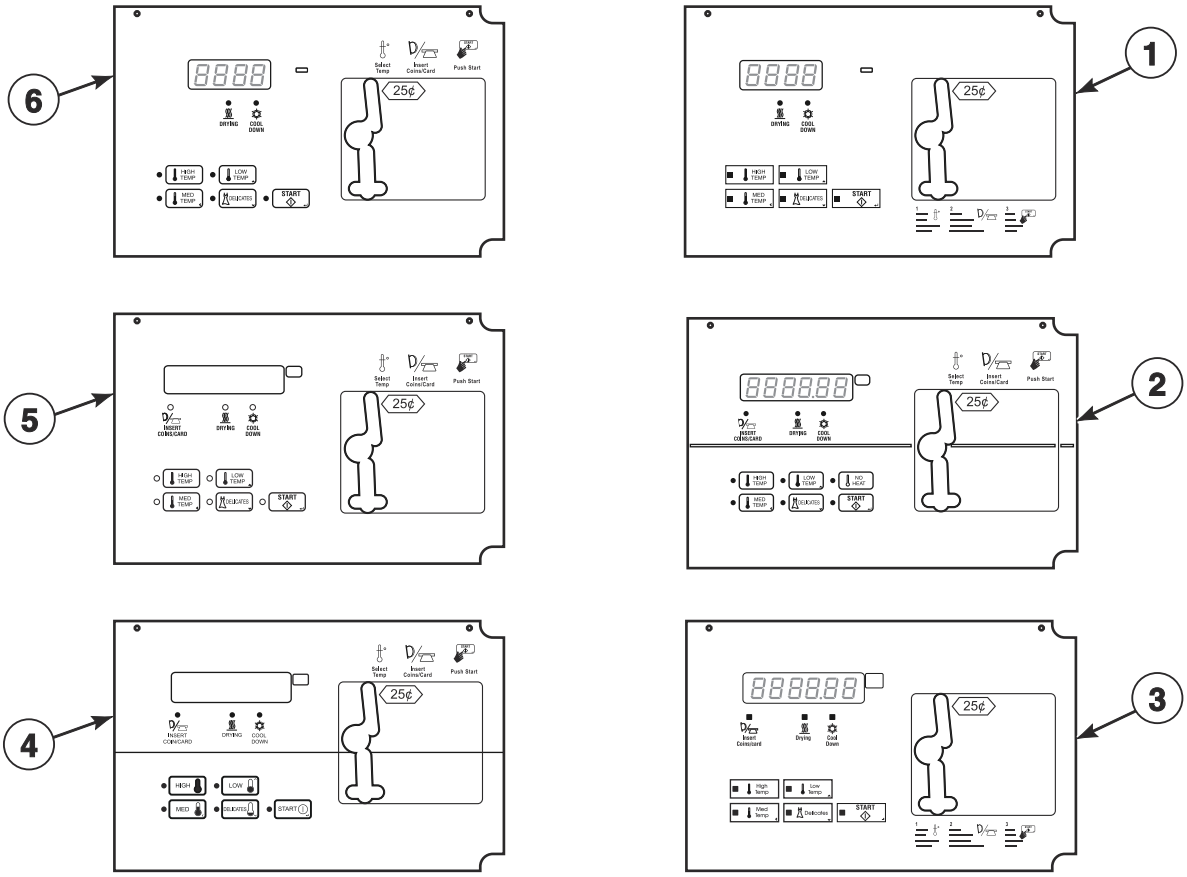

TMB3651P_70591301

© Copyright, Alliance Laundry Systems LLC – DO NOT COPY or TRANSMIT

Product Overview - B, N and W Control Suffixes

REF	PART NO.	DESCRIPTION	COMMENTS
1	-	Basic Electronic Control	H models
2	-	Quantum Gold Control	S models
3	-	Galaxy 600	H models
4	-	XQ Control	P models
5	-	EVO7S Control	B and J models
6	-	MDC II Control	S models

© Copyright, Alliance Laundry Systems LLC – DO NOT COPY or TRANSMIT

Dual Digital Control

Models with F in the 7th Position

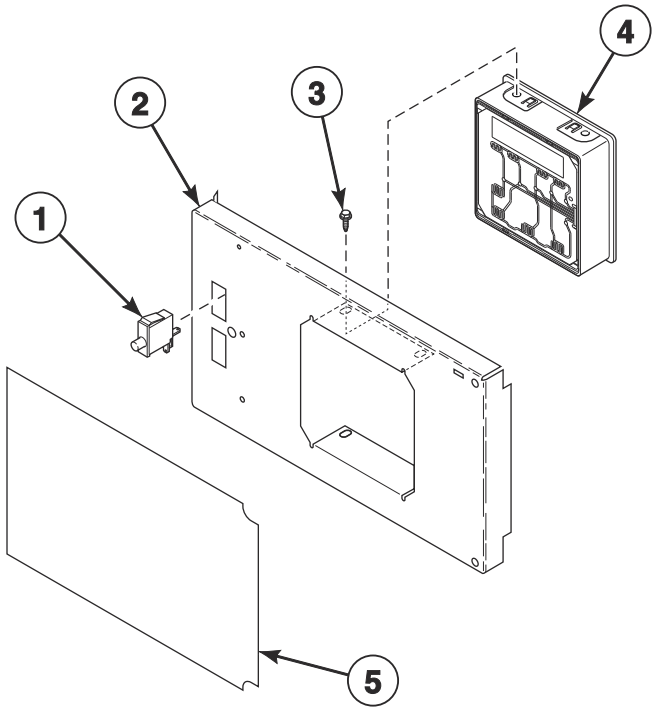

TMB3505P_70591301

© Copyright, Alliance Laundry Systems LLC – DO NOT COPY or TRANSMIT

Dual Digital Control

REF	PART NO.	DESCRIPTION	COMMENTS
	44334004	Vend Activation Harness	
1	70413301	Pushbutton Switch	
2	70497101	Control Plate	Design 3 and 5 H and U models; Design 3 S models; All other models
3	804608	Screw	4 required
4	70523101	Control Assembly	P models; Blue
	70479801	Control Assembly	H, S and U models; Green
	70479901	Control Assembly	B models; Red
5	70539102	Overlay	B models; Nonreversing
	70539101	Overlay	B models; Reversing
	70517802	Overlay	H models; Nonreversing; Design 3
	70517801	Overlay	H models; Reversing; Design 3
	70636502	Overlay	H models; Nonreversing; Design 5
	70636501	Overlay	H models; Reversing; Design 5
	70545502	Overlay	P models; Nonreversing
	70545501	Overlay	P models; Reversing
	70516802	Overlay	S models; Nonreversing; Design 3
	70516801	Overlay	S models; Reversing; Design 3
	70638702	Overlay	S models; Nonreversing; Design 5
	70638701	Overlay	S models; Reversing; Design 5
	70519002	Overlay	U models; Nonreversing; Design 3
	70519001	Overlay	U models; Reversing; Design 3
	70638802	Overlay	U models; Nonreversing; Design 5
	70638801	Overlay	U models; Reversing; Design 5

© Copyright, Alliance Laundry Systems LLC – DO NOT COPY or TRANSMIT

Electronic Display Control - Vend Models with B in the 7th Position

H and S Models

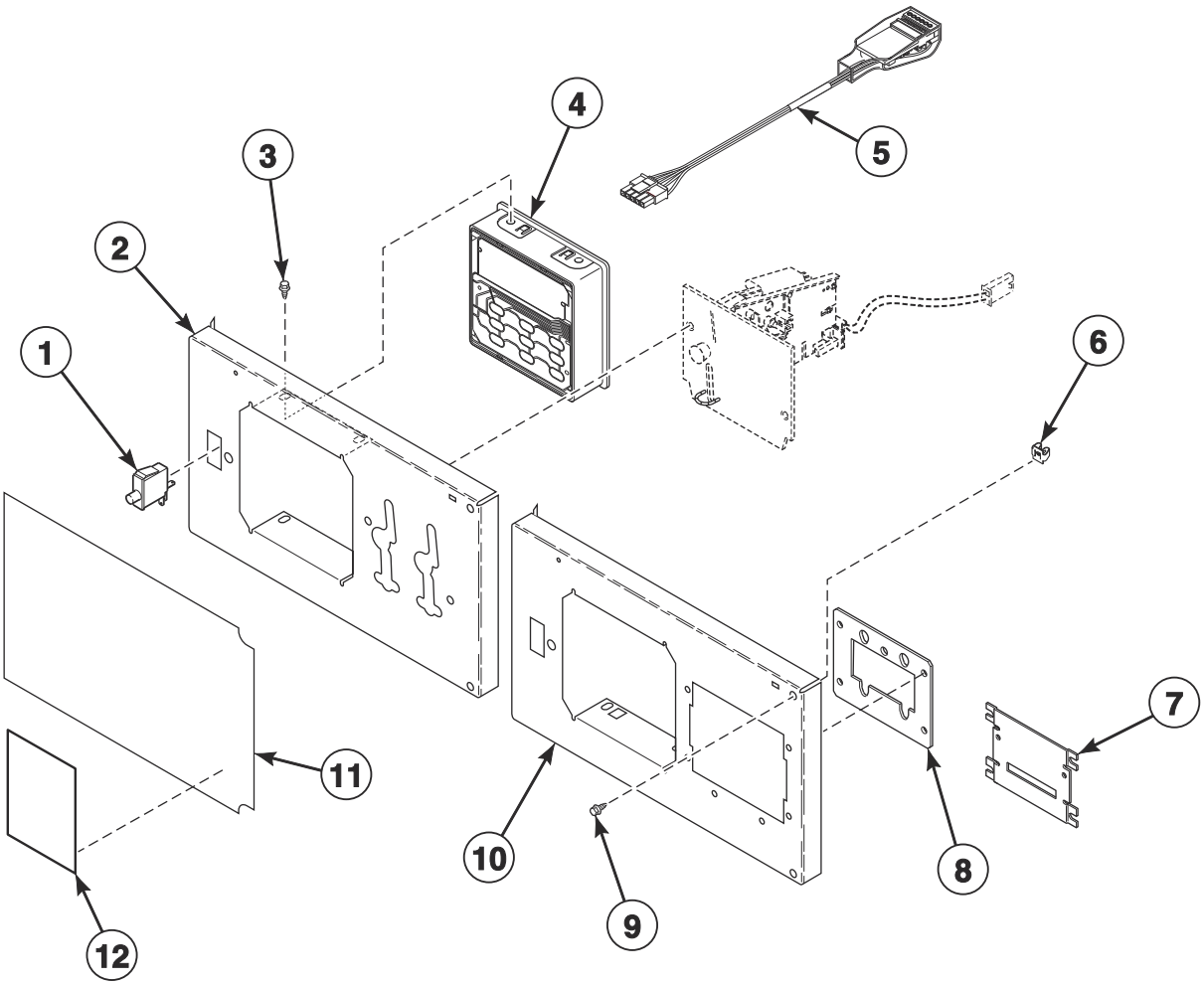

TMB3678P_70591301

© Copyright, Alliance Laundry Systems LLC – DO NOT COPY or TRANSMIT

Electronic Display Control - Vend Models with B in the 7th Position

REF	PART NO.	DESCRIPTION	COMMENTS
	44334004	Vend Activation Harness	
	44374701	App Pay Overlay Kit	
	44342801	Central Pay Harness	Models through November 2018
1	70413301	Pushbutton Switch	
2	70496601	Control Plate and Studs Assembly	Coin and central pay; Design 3 and 5 H models; Design 3 S models
3	804608	Screw	4 required
4	70478803P	Control Assembly	
5	203361P	Machine ID Control Assembly	Model or serial number is required when ordering
6	70030501	Expansion Clip	2 required
7	44089501	Slot Card Plate Assembly	Included in literature packet
8	70208801	Mounting Plate	
9	M411072	Screw	2 required
10	70497201	Control Plate Assembly	Card and card ready; Design 3 and 5 H models; Design 3 S models
11	70544701	Overlay	S models; Single drop; Design 3
	70544702	Overlay	S models; Dual drop; Design 3
	70544703	Overlay	S models; Card ready; Design 3
	70638201	Overlay	S models; Single drop; Design 5
	70638202	Overlay	S models; Dual drop; Design 5
	70638203	Overlay	S models; Card ready; Design 5
	70570301	Overlay	H models; Single drop; Design 3
	70570302	Overlay	H models; Dual drop; Design 3
	70570303	Overlay	H models; Card ready; Design 3
	70636101	Overlay	H models; Single drop; Design 5
	70636102	Overlay	H models; Dual drop; Design 5
	70636103	Overlay	H models; Card ready; Design 5
12	F8205101	Overlay	Black; Single drop; Left; Design 3
	F8696101	Overlay	Black; Single drop; Left; Design 5
	70557001	Overlay	S models; Prep for card; Design 3
	70557002	Overlay	S models; Central pay; Design 3
	F8696301	Overlay	S models; Prep for card; Design 5
	70556501	Overlay	H models; Prep for card; Design 3
	70556502	Overlay	H models; Central pay; Design 3
	70646001	Overlay	H models; Prep for card; Design 5
	70646002	Overlay	H models; Central pay; Design 5

© Copyright, Alliance Laundry Systems LLC – DO NOT COPY or TRANSMIT

Electronic Display Control - Vend Models with N or W in the 7th Position

B, H, J, P and S Models

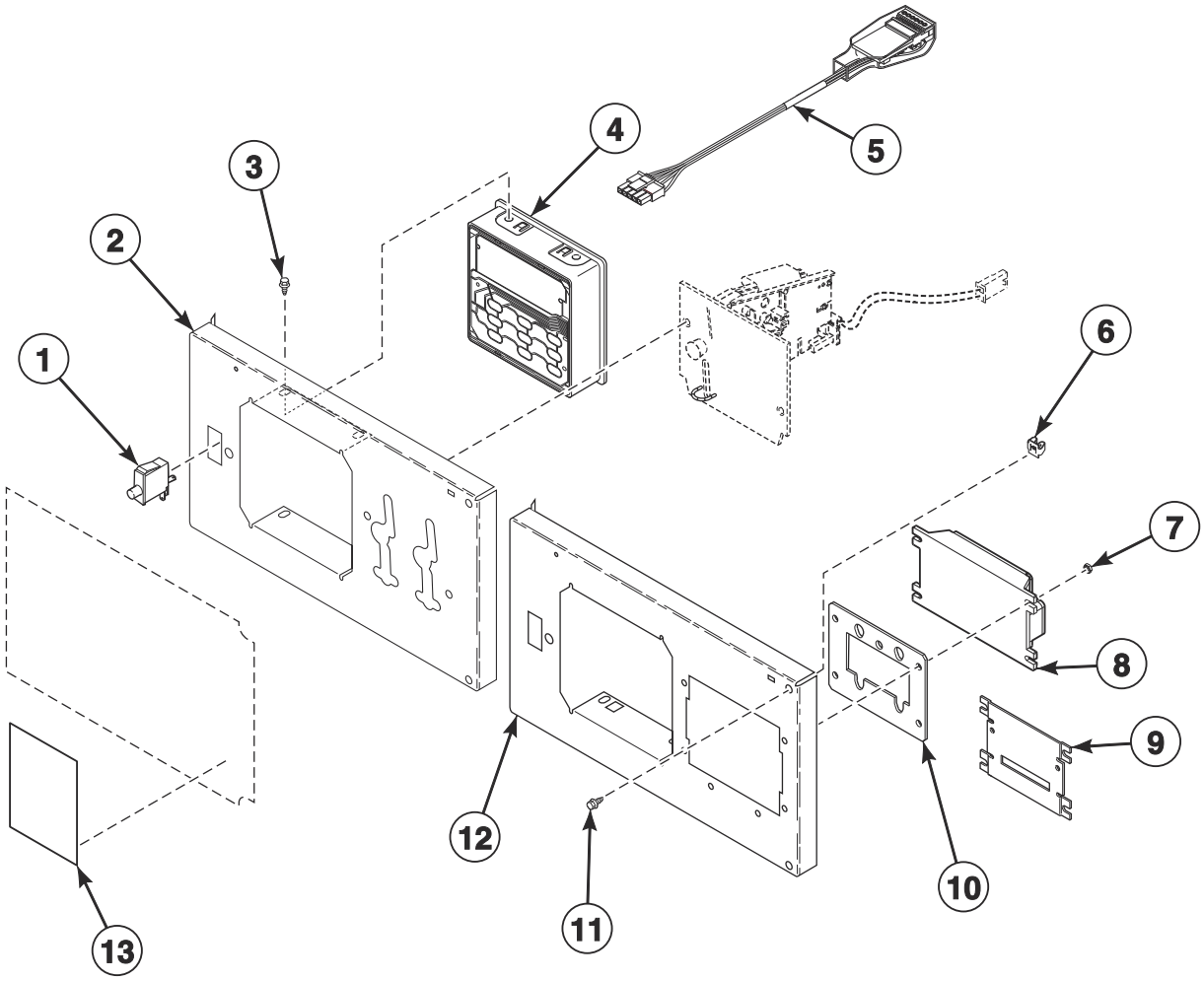

TMB3832P

© Copyright, Alliance Laundry Systems LLC – DO NOT COPY or TRANSMIT

Electronic Display Control - Vend Models with N or W in the 7th Position

REF	PART NO.	DESCRIPTION	COMMENTS
	44334004	Vend Activation Harness	
	44374701	App Pay Overlay Kit	
	F8719301	Fob Communication Harness	
1	70413301	Pushbutton Switch	
2	70496601	Control Plate and Studs Assembly	Coin and central pay; Design 3 and 5 H models; Design 3 S models; All other models
3	804608	Screw	4 required
4	70523003	Control Assembly	P models; Blue
	70478803P	Control Assembly	H and S models; Green
	70478903	Control Assembly	B and J models; Red
5	203361P	Machine ID Control Assembly	Model or serial number is required when ordering
6	70030501	Expansion Clip	
7	70054	Nut	
8	205135	Fob Reader Control Assembly	
9	44089501	Slot Card Plate Assembly	
10	70208801	Mounting Plate	
11	M411072	Screw	
12	70497201	Control Plate Assembly	Card, card ready and FOB; Design 3 and 5 H models; Design 3 S models; All other models
13	F8205101	Overlay	S models; Single drop; Left; Design 3
	70557001	Overlay	B and S models; Prep for card; Design 3
	70557002	Overlay	B and S models; Central pay; Design 3
	70295101	Overlay	S models; World drop; Design 3
	F8696101	Overlay	S models; Single drop; Left; Design 5
	F8696301	Overlay	S models; Prep for card; Design 5
	F8696201	Overlay	S models; World drop; Design 5
	70556801	Overlay	H models; World drop; Design 3
	70556501	Overlay	H models; Prep for card; Design 3
	70556502	Overlay	H models; Central pay; Design 3
	70556601	Overlay	H models; Single drop; Left; Design 3
	70556901	Overlay	H models; Citron; World drop; Design 3
	70518101	Overlay	H models; Citron; Prep for card; Design 3
	70518102	Overlay	H models; Citron; Central pay; Design 3
	70556701	Overlay	H models; Citron; Left; Design 3
	70645901	Overlay	H models; World drop; Design 5
	70646001	Overlay	H models; Prep for card; Design 5
	70646002	Overlay	H models; Central pay; Design 5
	70645601	Overlay	H models; Single drop; Left; Design 5
	70645801	Overlay	H models; Citron; World drop; Design 5
	70646101	Overlay	H models; Citron; Prep for card; Design 5
	70645701	Overlay	H models; Citron; Single drop; Left; Design 5
	70646102	Overlay	H models; Citron; Central pay; Design 5
	70556201	Overlay	P models; Single drop; Right
	70556401	Overlay	P models; Prep for card
	70556402	Overlay	P models; Central pay
	70556301	Overlay	P models; Single drop; Left
	F8733901	Overlay	S models; FOB
	F8734201	Overlay	H models; FOB
	F8736501	Overlay	H models; Citron; FOB

© Copyright, Alliance Laundry Systems LLC – DO NOT COPY or TRANSMIT

Electronic Display Control Overlays - Vend Models with N or W in the 7th Position

B, H, J, P and S Models

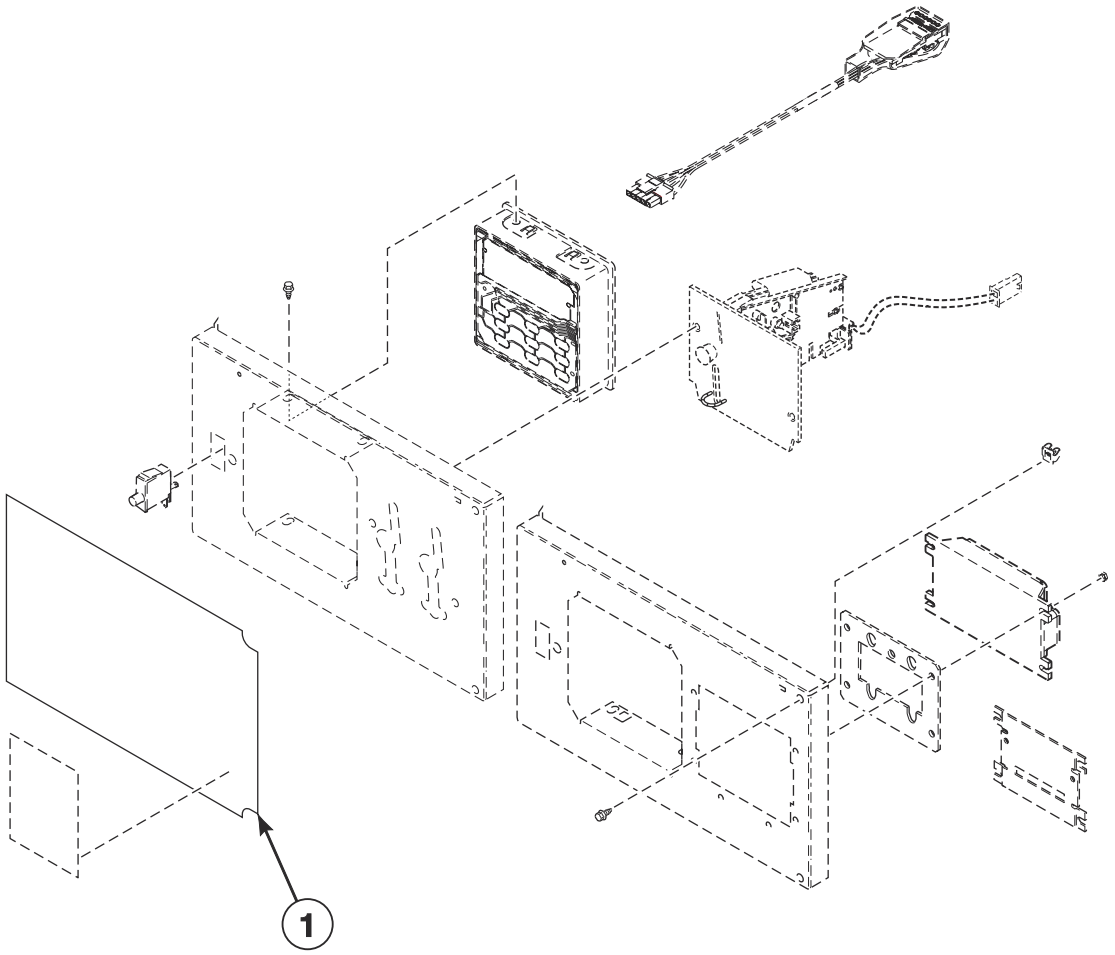

TMB3832PA

© Copyright, Alliance Laundry Systems LLC – DO NOT COPY or TRANSMIT

Electronic Display Control Overlays - Vend Models with N or W in the 7th Position

REF	PART NO.	DESCRIPTION	COMMENTS
1	70512004	Overlay	S models; Single drop; Design 3
	70512005	Overlay	S models; Dual drop; Design 3
	70512006	Overlay	S models; Card ready; Design 3
	70512007	Overlay	S models; Central pay; Design 3
	70512008	Overlay	S models; World drop; Design 3
	70637601	Overlay	S models; Single drop; Design 5
	70637602	Overlay	S models; Dual drop; Design 5
	70637603	Overlay	S models; Card ready; Design 5
	70637604	Overlay	S models; Central pay; Design 5
	70637605	Overlay	S models; World drop; Design 5
	70626301	Overlay	S models; Single drop; English/Spanish; Design 3
	70626302	Overlay	S models; Dual drop; English/Spanish; Design 3
	70626303	Overlay	S models; Card ready; English/Spanish; Design 3
	70559001	Overlay	Models SG030D and SJ030D
	70517001	Overlay	H models; Single drop; Design 3
	70517002	Overlay	H models; Dual drop; Design 3
	70517003	Overlay	H models; Card ready; Design 3
	70517004	Overlay	H models; Central pay; Design 3
	70517005	Overlay	H models; World drop; Design 3
	70636201	Overlay	H models; Single drop; Design 5
	70636202	Overlay	H models; Dual drop; Design 5
	70636203	Overlay	H models; Card ready; Design 5
	70636204	Overlay	H models; Central pay; Design 5
	70636205	Overlay	H models; World drop; Design 5
	70571001	Overlay	H models; Single drop; Cityscape
	70571002	Overlay	H models; Dual drop; Cityscape
	70571003	Overlay	H models; Card ready; Cityscape
	70518201	Overlay	H models; Single drop; Citron; Design 3
	70518202	Overlay	H models; Dual drop; Citron; Design 3
	70518203	Overlay	H models; Card ready; Citron; Design 3
	70636301	Overlay	H models; Single drop; Citron; Design 5
	70636302	Overlay	H models; Dual drop; Citron; Design 5
	70636303	Overlay	H models; Card ready; Citron; Design 5
	70571101	Overlay	B models; Single drop
	70571102	Overlay	B models; Dual drop
	70571103	Overlay	B models; Card ready
	70541201	Overlay	P models; Single drop
	70541202	Overlay	P models; Dual drop
	70541203	Overlay	P models; Card ready
	70571104	Overlay	J models; Electronic drop

© Copyright, Alliance Laundry Systems LLC – DO NOT COPY or TRANSMIT

Electronic Display Control - OPL Models with N in the 7th Position

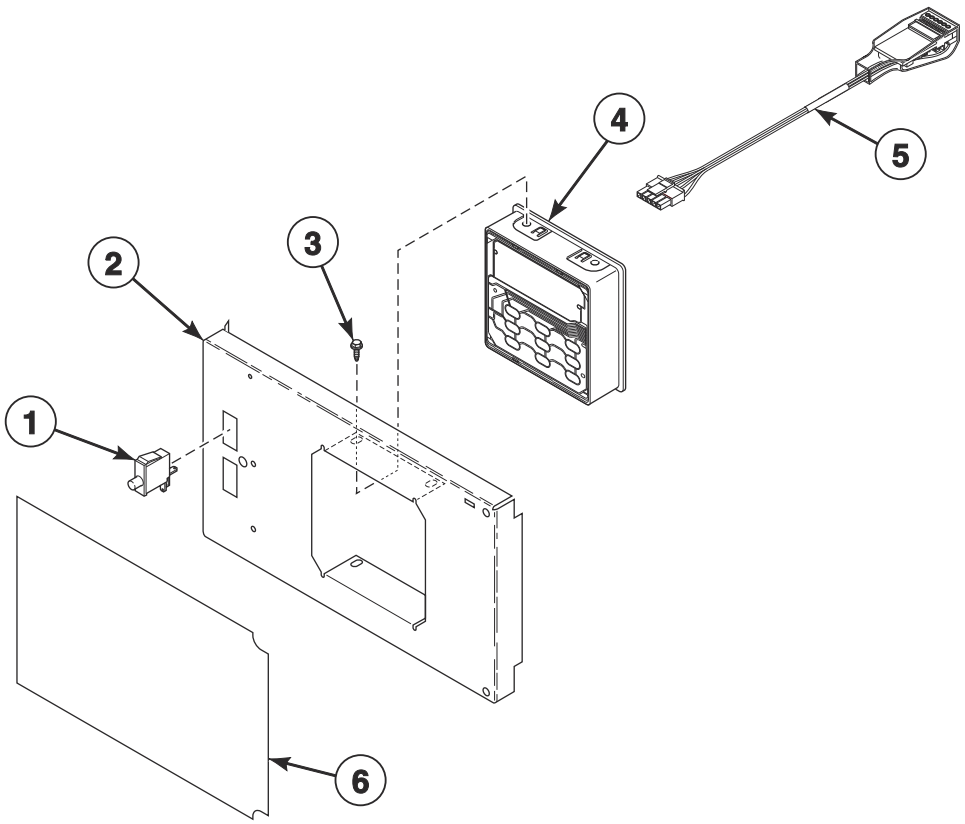

TMB3680P_70591301

© Copyright, Alliance Laundry Systems LLC – DO NOT COPY or TRANSMIT

Electronic Display Control - OPL Models with N in the 7th Position

REF	PART NO.	DESCRIPTION	COMMENTS
	44334004	Vend Activation Harness	
1	70413301	Pushbutton Switch	
2	70497101	Control Plate	Design 3 and 5 H and U models; Design 3 S models; All other models
3	804608	Screw	4 required
4	70523004	Control Assembly	P models; Blue
	70478804	Control Assembly	H, S and U models; Green
	70478904	Control Assembly	B models; Red
5	203361P	Machine ID Control Assembly	Model or serial number is required when ordering
6	70570601	Overlay	S models; Reversing; Design 3
	70570602	Overlay	S models; Nonreversing; Design 3
	70638301	Overlay	S models; Reversing; Design 5
	70638302	Overlay	S models; Nonreversing; Design 5
	70571401	Overlay	U models; Reversing; Design 3
	70571402	Overlay	U models; Nonreversing; Design 3
	70638901	Overlay	U models; Reversing; Design 5
	70638902	Overlay	U models; Nonreversing; Design 5
	70570801	Overlay	H models; Reversing; Design 3
	70570802	Overlay	H models; Nonreversing; Design 3
	70636401	Overlay	H models; Reversing; Design 5
	70636402	Overlay	H models; Nonreversing; Design 5
	70548801	Overlay	B models; Reversing
	70548802	Overlay	B models; Nonreversing
	70571601	Overlay	P models; Reversing
	70571602	Overlay	P models; Nonreversing

© Copyright, Alliance Laundry Systems LLC – DO NOT COPY or TRANSMIT

3.5 Inch Graphical Control

U Models with D in the 7th Position

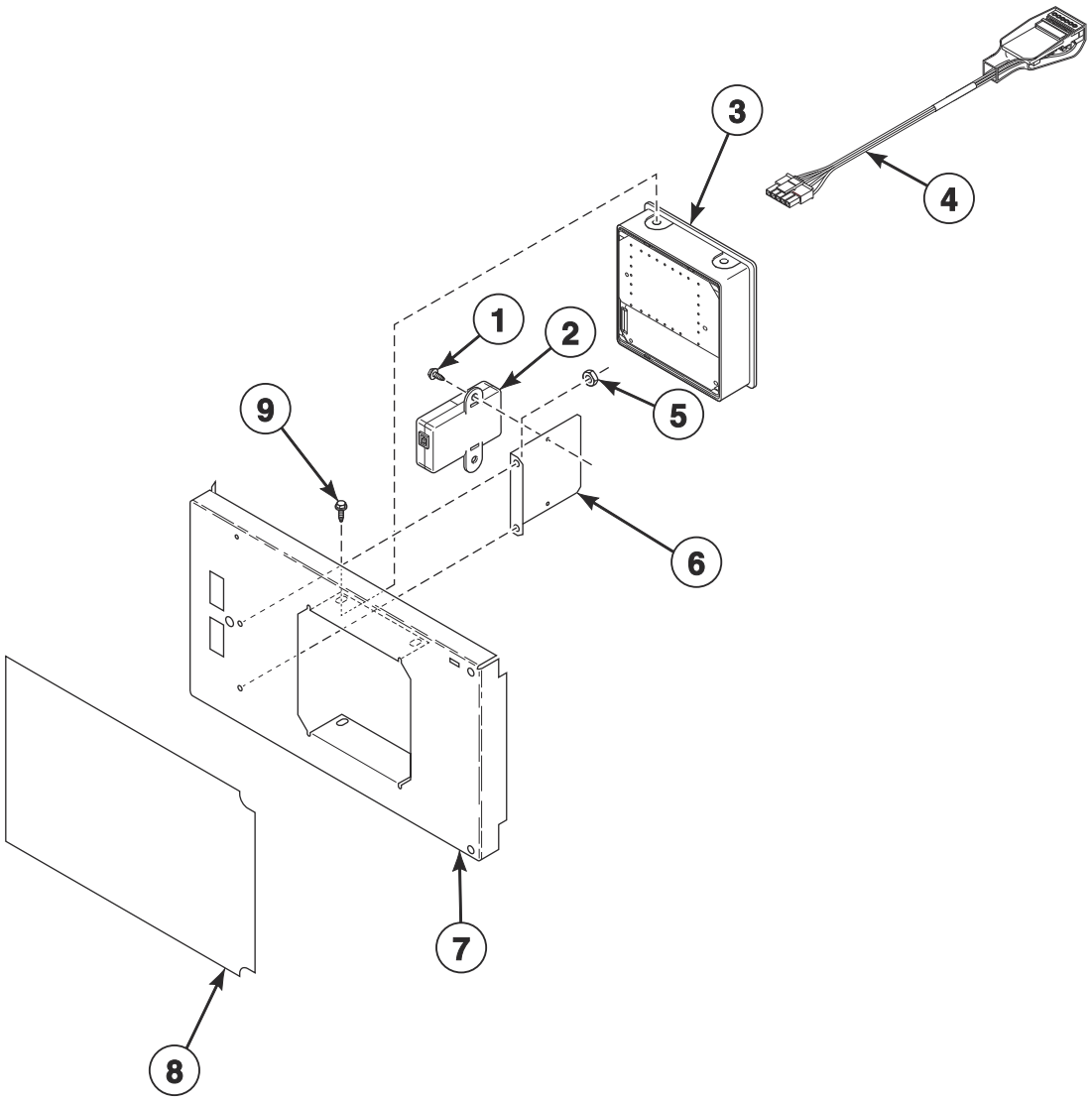

TMB3681P_70591301

© Copyright, Alliance Laundry Systems LLC – DO NOT COPY or TRANSMIT

3.5 Inch Graphical Control

REF	PART NO.	DESCRIPTION	COMMENTS
	F8617901	Harness	USB
1	33562	Screw	2 required
2	203440	USB-Serial Interface Assembly	
3	70543104	Control Assembly	
4	203361P	Machine ID Control Assembly	Model or serial number is required when ordering
5	44071201	Nut	2 required
6	70547001	USB Bracket	
7	70570201	Control Door and Studs Assembly	
8	70595401	Overlay	Design 3 models
	70639001	Overlay	Design 5 models
9	804608	Screw	4 required

© Copyright, Alliance Laundry Systems LLC – DO NOT COPY or TRANSMIT

Coin Drops

All Models Except U Models

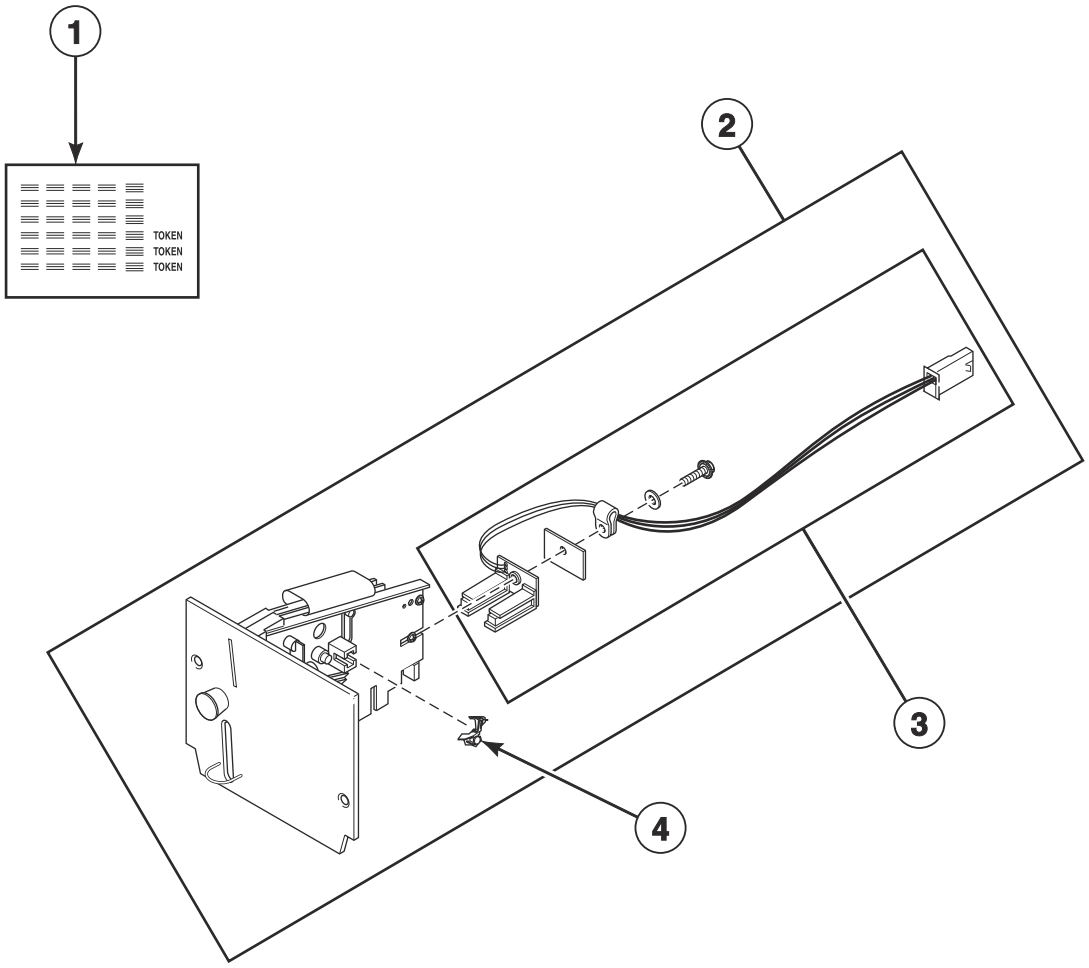

TMB3510P_70591301

© Copyright, Alliance Laundry Systems LLC – DO NOT COPY or TRANSMIT

Coin Drops

REF	PART NO.	DESCRIPTION	COMMENTS
1	38725	Coin Identification Paper	
2	70441601P	Coin Drop	Single; U.S.A.; $.25
	38475	Coin Drop Assembly	Single; Japan; 100 yen
	38464P	Coin Drop Assembly	Single; Canada; .25
	CK077	Coin Drop Kit	Single; Taiwan; 10 NT
	70506901	Coin Drop Assembly	Single; Singapore; $1.00 NEW
	70441603	Coin Drop	Dual; U.S.A.; $.25 and $1.00
	38519	Coin Drop Assembly	Dual; Japan; 100 yen and 500 yen
	70441602	Coin Drop Assembly	Dual; Canada; .25 and 1.00
	38467	Coin Drop Assembly	Dual; Australia; $0.20 and $1.00
	70447301	Coin Drop Assembly	Dual; Australia; $1.00 and $2.00
	70283102	Coin Drop Assembly	Dual; 0.20 and 0.50 Euro
	210195	Coin Drop Assembly	Dual; 0.20 and 1.00 Euro
	210196	Coin Drop Assembly	Dual; 0.50 and 1.00 Euro
	F0160737-00	Coin Meter	Dual; 0.50 and 2.00 Euro
	70281102	Coin Drop Assembly	Dual; Taiwan; 10 and 50 NT
	70482401	Coin Drop Assembly	Dual; New Zealand ; $1.00 and $2.00
	38462P	Coin Drop Assembly	Single; Token; STD 118-1
	38463	Coin Drop Assembly	Single; Token; STD 118-5
	38963P	Coin Drop	Single; Token STD 118-16
	CK097	Coin Drop Kit	Single; Jeton 08MS
	201141	Coin Drop Assembly	Single; Token; Jeton wh121
	70471601	Coin Drop Assembly	Single; Token; 7K
	70513302	Electronic Coin Drop Assembly	Euro and Great Britain coins
	70513310	Electronic Coin Drop Assembly	Japan and Thailand coins
	70513304	Electronic Coin Drop Assembly	Australia, New Zealand, Hong Kong and South Korea coins
	70513303	Electronic Coin Drop Assembly	Denmark, Norway and Euro coins
	70513306	Electronic Coin Drop Assembly	Mexico, Ecuador and U.S.A. coins
	70294107	Electronic Coin Drop Assembly	Lithuania, Latvia and Euro coins
	70513311	Electronic Coin Drop Assembly	China and Malaysia coins
	70513318	Electronic Coin Drop Assembly	South African 1, 2 and 5 rand coins
	70513309	Electronic Coin Drop Assembly	Euro coins
	70513312	Electronic Coin Drop Assembly	Russia coins
	70513313	Electronic Coin Drop Assembly	Phillipines coins
	70513314	Electronic Coin Drop Assembly	Thailand coins
	70513315	Electronic Coin Drop Assembly	Chile coins
	70513316	Electronic Coin Drop Assembly	Singapore coins
3	200674P	Opto Coupler	
4	201595P	Wire Guard	

© Copyright, Alliance Laundry Systems LLC – DO NOT COPY or TRANSMIT

Coin Drop Kits

All Models Except U Models

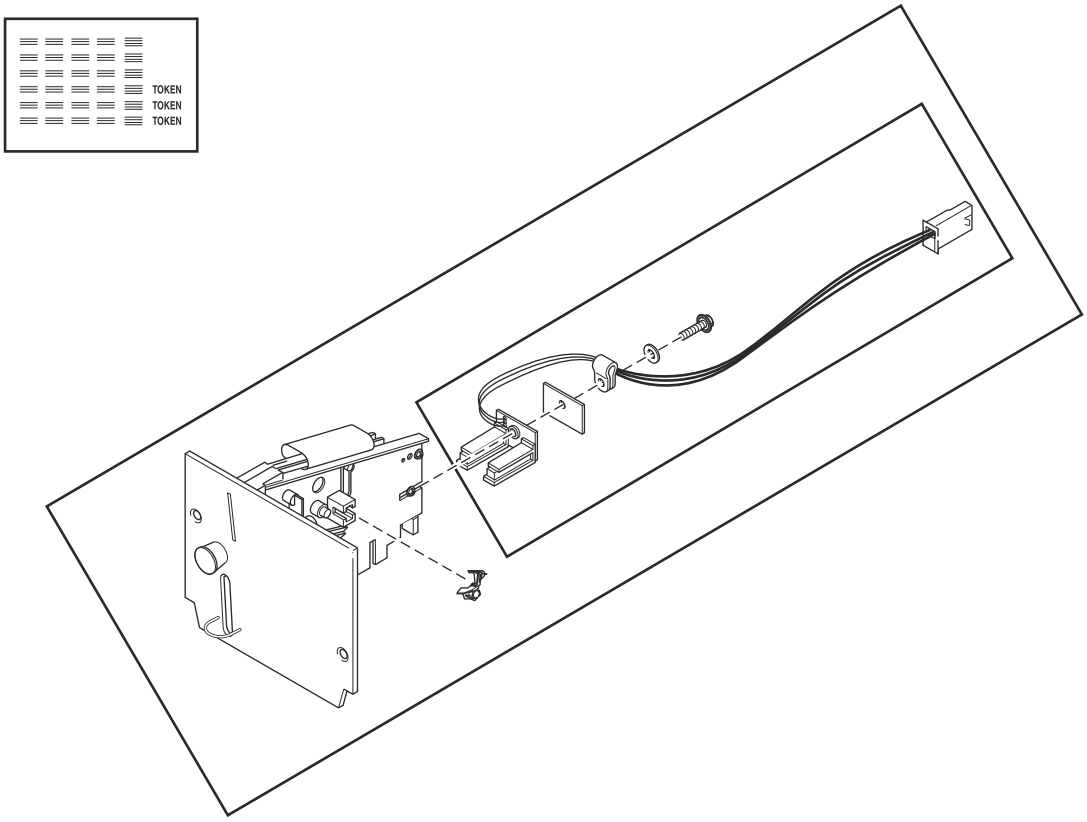

TMB3510PA_70591301

© Copyright, Alliance Laundry Systems LLC – DO NOT COPY or TRANSMIT

Coin Drop Kits

REF	PART NO.	DESCRIPTION	COMMENTS
	CK115	Electronic Coin Drop Kit	United States and Canada
	CK099	Electronic Coin Drop Kit	Australia (default), New Zealand, Hong Kong, South Korea and Malaysia
	CK100	Electronic Coin Drop Kit	United Kingdom (default) and Europe
	CK101	Electronic Coin Drop Kit	Europe (default), Denmark and Norway
	CK125	Electronic Coin Drop Kit	South Africa
	CK109	Electronic Coin Drop Kit	Euro
	CK110	Electronic Coin Drop Kit	Mexico (default), Ecuador and United States
	CK113	Electronic Coin Drop Kit	Japan and Taiwan
	CK116	Electronic Coin Drop Kit	Malaysia (default) and China
	CK117	Electronic Coin Drop Kit	Russia
	CK118	Electronic Coin Drop Kit	Philippine
	CK119	Electronic Coin Drop Kit	Thailand
	CK120	Electronic Coin Drop Kit	Chile
	CK121	Electronic Coin Drop Kit	Singapore
	CK122	Coin Drop Kit	New Zealand; 1.00 and 2.00

© Copyright, Alliance Laundry Systems LLC – DO NOT COPY or TRANSMIT

Network Board, Central Pay and Card Reader Components

Central Pay Starting December 2018

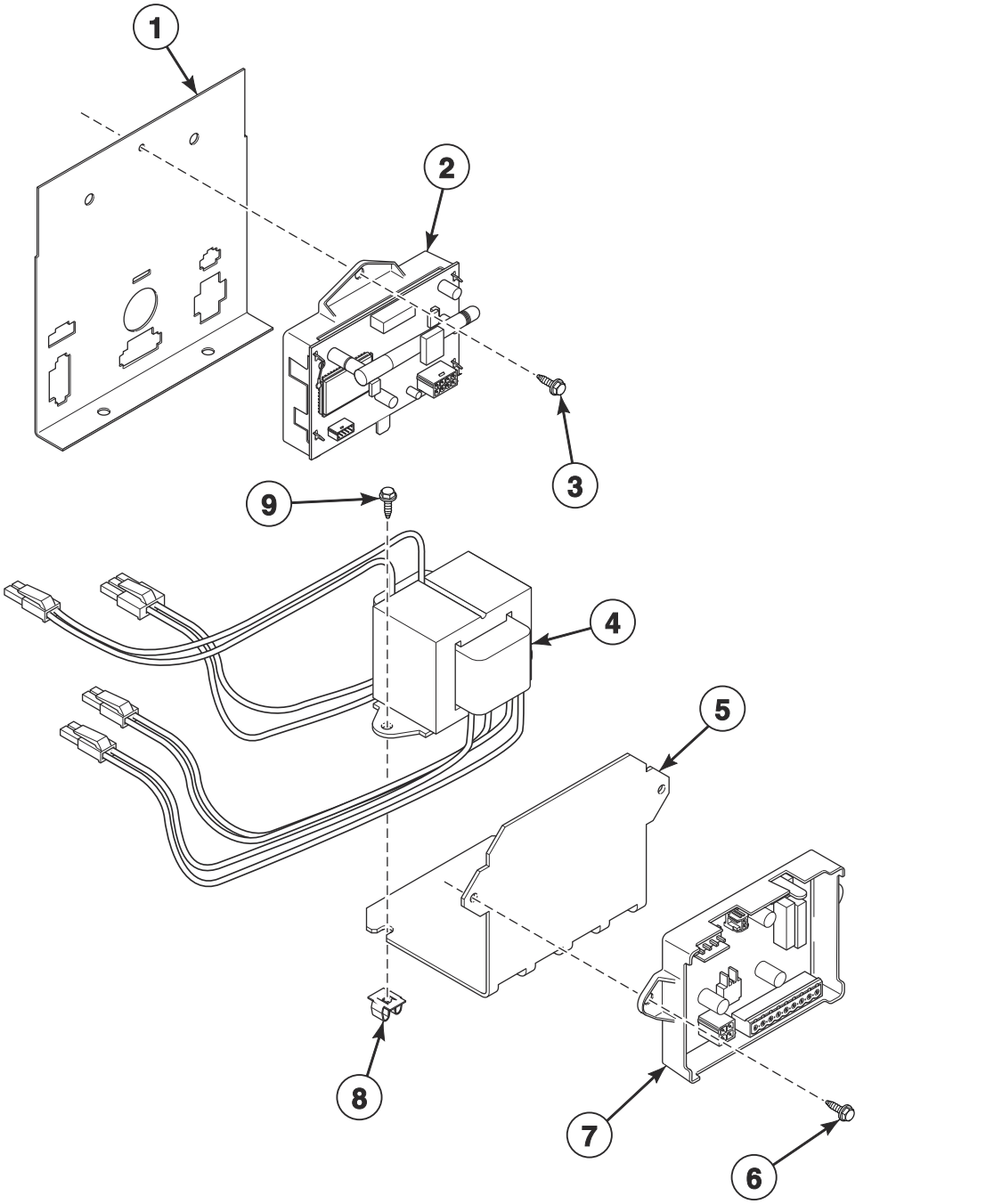

TMB3677P_70591301

© Copyright, Alliance Laundry Systems LLC – DO NOT COPY or TRANSMIT

Network Board, Central Pay and Card Reader Components

REF	PART NO.	DESCRIPTION	COMMENTS
	70596301	Wireless Network Kit	H and U models through 1/31/19; S models through 5/12/19
	70609701	Wireless Network Kit	H models starting 2/1/19; S models starting 5/13/19
	F8536002	Wireless Network Board Harness	H and U models through 1/31/19; S models through 5/12/19
	F8613201	FCC-IC Label	HT and U models through 1/31/19; ST models through 5/12/19
	F8674006	Wireless Network Harness	H models starting 2/1/19; S models starting 5/13/19
	204692	Wireless Control Label	H models starting 2/1/19; S models starting 5/13/19
	NK320	Ethernet Gateway Kit	S models through 5/12/19
	NK330	USB Gateway Kit	S models through 5/12/19
	203346	USB IR Interface Kit	
	70666806	Fob Reader Kit	
	44355601	Central Pay Harness	Routes from central pay board to contol tray
	44272301	Transformer Harness	100-120 Volt; Routes from transformer to I/O Control Assembly; Card and central pay
	44272302	Transformer Harness	200-480 Volt; Routes from transformer to I/O Control Assembly; Card and central pay
	44355604	Central Pay Board Harness	Routes from central pay board to transformer
	44355605	Central Pay Harness	Routes from central pay board to front end control
1	70307007	Harness Mounting Plate	
2	203532	Wireless Network Control Assembly	H and U models through 1/31/19; S models through 5/12/19
	807211	Wireless Network Control Assembly	H models starting 2/1/19; S models starting 5/13/19
3	F8206901	Screw	
4	202757	Transformer	100-120 Volt; Card and central pay
	202758	Transformer	200-480 Volt; Card and central pay
5	70604001	Mounting Bracket	
6	51780	Screw	2 required
7	70612701	Central Pay Kit	100-120 Volt
	70612703	Central Pay Kit	200-480 Volt
8	70030501	Expansion Clip	2 required
9	M411072	Screw	

© Copyright, Alliance Laundry Systems LLC – DO NOT COPY or TRANSMIT

Door Assemblies

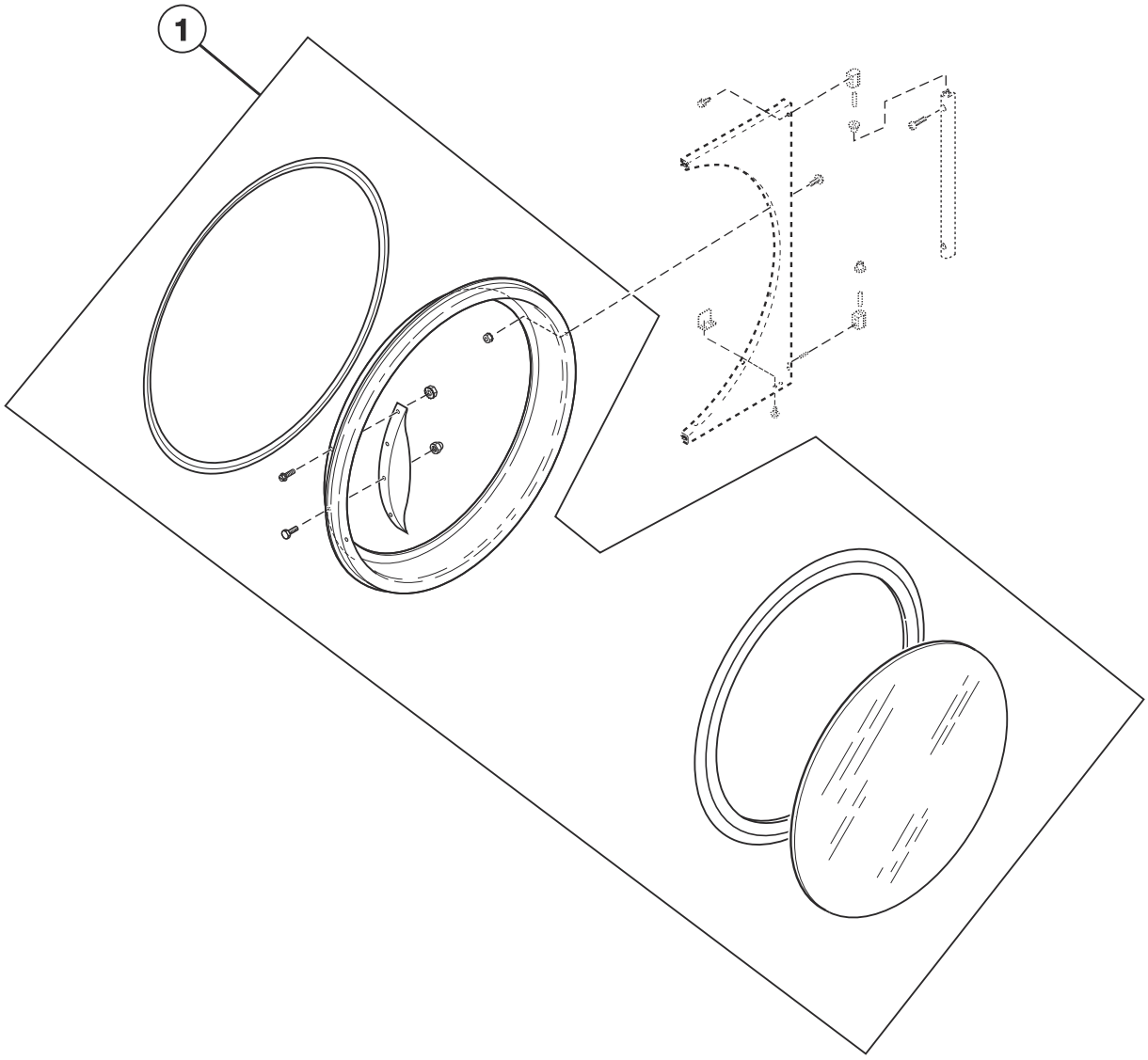

TMB3551P_70591301

© Copyright, Alliance Laundry Systems LLC – DO NOT COPY or TRANSMIT

Door Assemblies

REF	PART NO.	DESCRIPTION	COMMENTS
1	70212300	Door Assembly	S models; Stainless steel; Design 3
	70597701	Door Assembly	S models; Stainless steel; Design 5
	70212302P	Door Assembly	S models; Chrome; Design 3
	70597702	Door Assembly	S models; Chrome; Design 5
	70496501P	Door Assembly	U models; Stainless steel; Design 3
	70597703	Door Assembly	U models; Stainless steel; Design 5
	70496502P	Door Assembly	U models; Chrome; Design 3
	70597704	Door Assembly	U models; Chrome; Design 5
	44058005P	Door Assembly	H models; Stainless steel; Design 3
	70597705	Door Assembly	H models; Stainless steel; Design 5
	44058007P	Door Assembly	H models; Stainless steel with green trim; Design 3
	70597707	Door Assembly	H models; Stainless steel with green trim; Design 5
	44058006	Door Assembly	H models; Chrome; Design 3
	70597706	Door Assembly	H models; Chrome; Design 5
	44058008	Door Assembly	H models; Chrome with green trim; Design 3
	70597708	Door Assembly	H models; Chrome with green trim; Design 5
	70212301P	Door Assembly	B models; Black; Design 3
	44287801LGP	Door Assembly	P models; Light gray; Design 3
	70597709	Door Assembly	B, J and P models; Black; Design 5
	44287801BP	Door Assembly	P models; Use with stainless steel front panel

© Copyright, Alliance Laundry Systems LLC – DO NOT COPY or TRANSMIT

Door Components

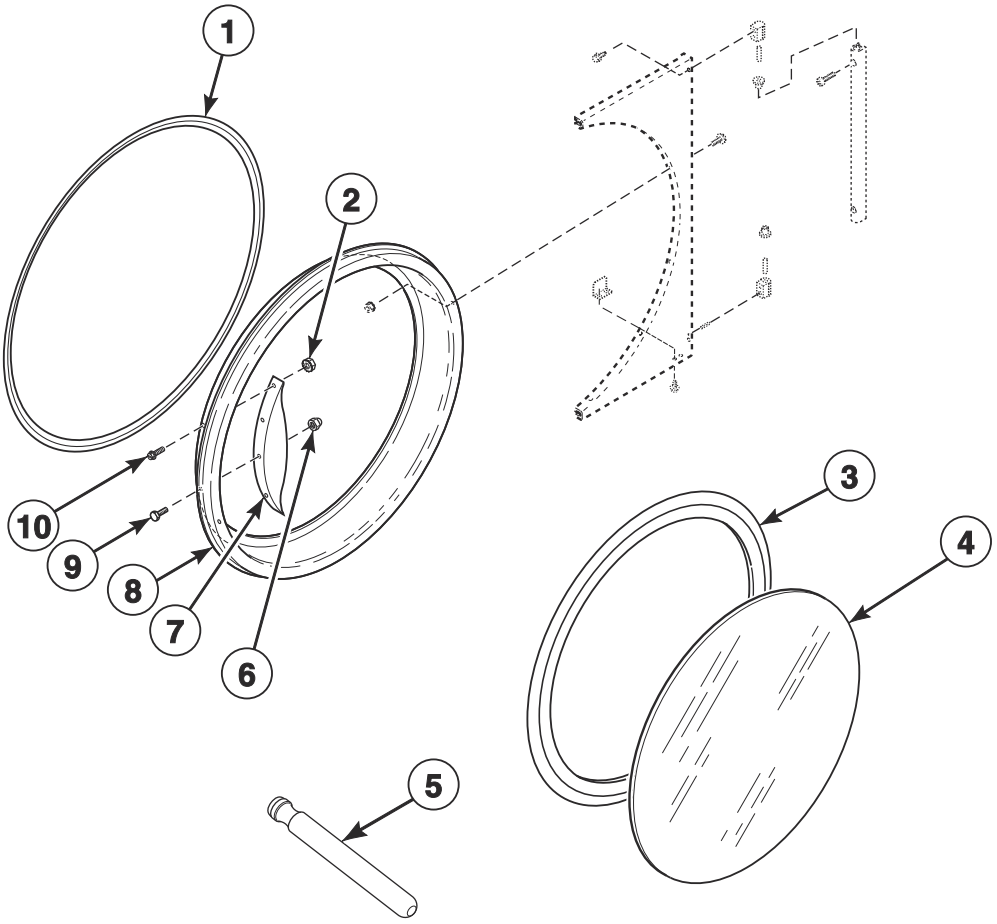

TMB3550P_70591301

© Copyright, Alliance Laundry Systems LLC – DO NOT COPY or TRANSMIT

Door Components

REF	PART NO.	DESCRIPTION	COMMENTS
	70650401	Door Glass Label	H models; Design 5
	70707701	Door Glass Label	S models
	70707501	Max Fill Line Label	
1	70296801	Door Ring Gasket	
2	44088001	Nut	B, H and S models; 4 required
3	70211901P	Door Glass Seal Kit	Use Loctite 414 for seal
4	70133601P	Door Glass	H models; Design 3
	70133602	Door Glass	H models; Green trim; Design 3
	70133604	Door Glass	H models; Green trim; Design 5
	M400784P	Door Glass	All other models; Design 5 H models
5	M4221P4	Door Glass Installation Tool	
6	M414215	Nut	For door strike; Mounts between door strike screw and door handle
7	44007902P	Door Handle	B, J and S models; Design 5 P models
	44263801	Door Handle	U models; Use 901620 Screw, 800465 Washer, 803871 Screw and 44088001 Nut to attach; 90-degree chrome pull handle
	70521101	Door Handle	H models; Design 3
	44370602	Door Handle	H models; Design 5
8	70543901	Door Ring Assembly	H and S models; Stainless steel; Design 3
	70543905	Door Ring Assembly	H and S models; Chrome; Design 3
	70543902	Door Ring Assembly	U models; Design 3
	70543906	Door Ring Assembly	U models; Chrome; Design 3
	70543904B	Door Ring Assembly	B models; Design 3
	70543907LG	Door Ring and Handle Assembly	P models; Includes handle; Design 3
	70543907B	Door Ring and Handle Assembly	P models; Includes handle; Use with stainless steel and white front panel
	70597507B	Door Ring Assembly	B, J and P models; Design 5
9	M400661	Screw	Door Strike
10	70442101	Screw	B, H, J, P and S models; 4 required

© Copyright, Alliance Laundry Systems LLC – DO NOT COPY or TRANSMIT

Hinge Components - Design 3 Models

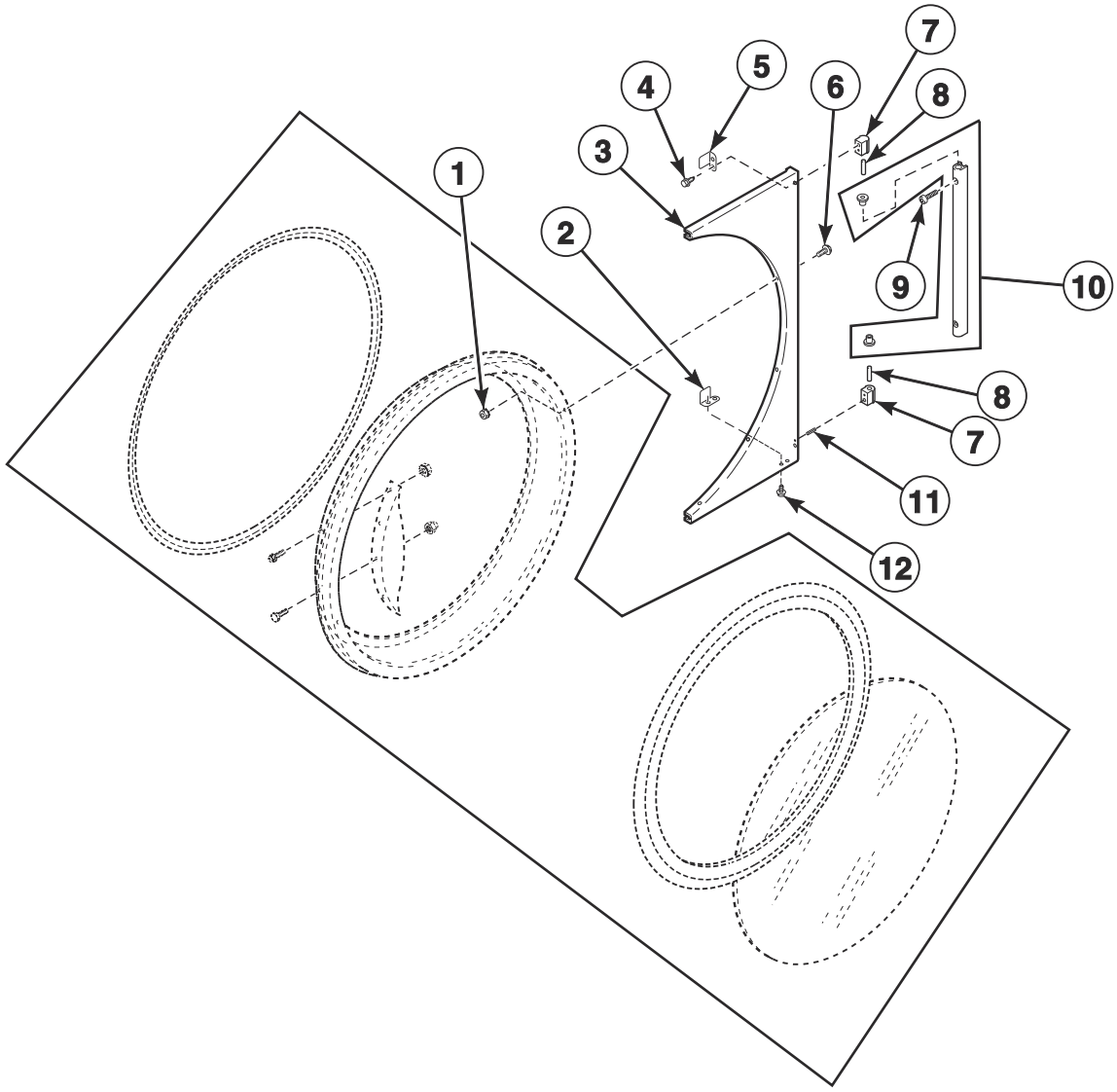

TMB3459P_70591301

© Copyright, Alliance Laundry Systems LLC – DO NOT COPY or TRANSMIT

Hinge Components - Design 3 Models

REF	PART NO.	DESCRIPTION	COMMENTS
1	44088001	Nut	
2	70727901	Door Switch Actuator	Bottom
3	70116003*	Door Hinge	H, S and U models through 3/31/21
	70116005W	Door Hinge	H, S and U models starting 4/1/21
	70116006	Door Hinge	H, S and U models; Stainless steel
	70116005LG	Door Hinge	Light gray; P and U models
	70116005B	Door Hinge	Black; B models; P models with white and stainless steel front panel
4	70576101	Screw	
5	70532105	Door Switch Actuator	Top
6	44349101	Screw	
7	M4772P3	Hinge Cam Kit	H, P, S and U models
	M4773P3	Hinge Cam Kit	Black; B models; P models with white and stainless steel front panel
8	70071401	Pin	
9	70033502	Screw	H, P, S and U models
	70407301	Screw	Black; B models; P models with white and stainless steel front panel
10	44035001	Door Hinge Lug Assembly	H, P, S and U models
	44035002	Door Hinge Lug Assembly	Black; B models; P models with white and stainless steel front panel
11	70436301	Screw	
12	70058501	Pop Rivet	

*** Add Letter To Designate Color. Q - Bisque W - White**

© Copyright, Alliance Laundry Systems LLC – DO NOT COPY or TRANSMIT

Hinge Components - Design 5 Models

B, H, J, P, S and U models

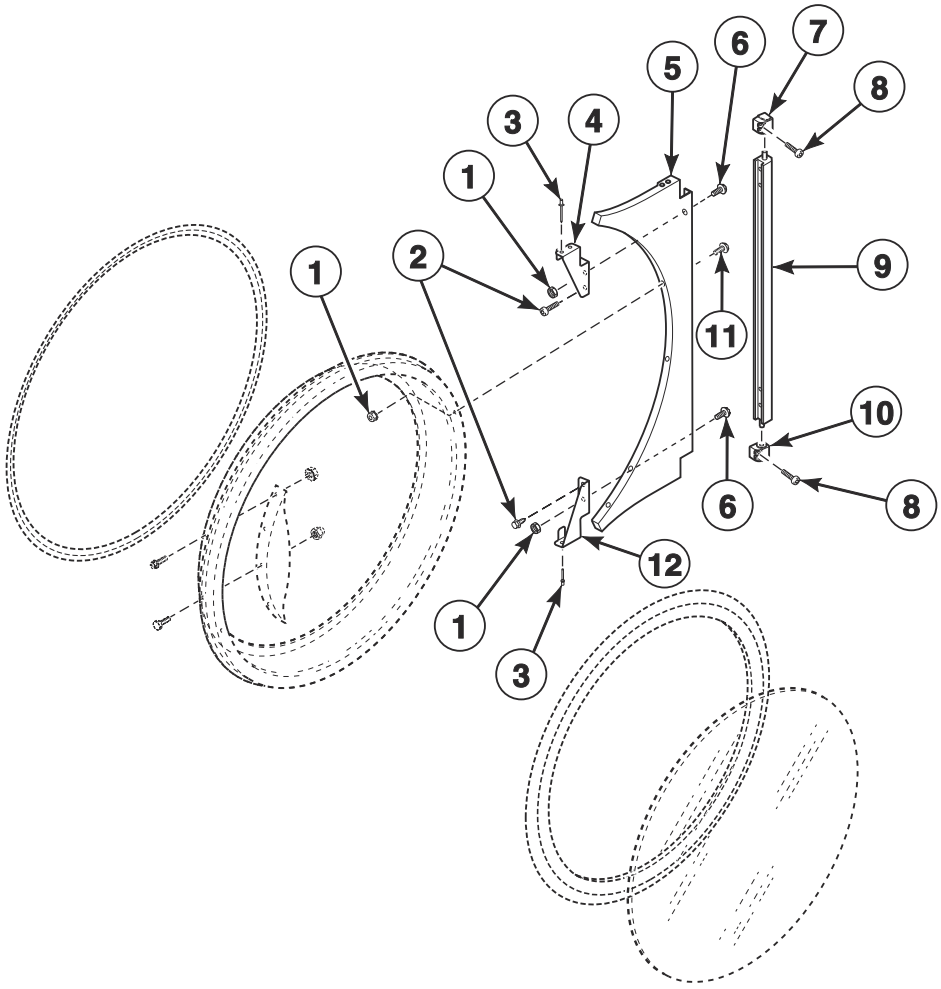

TMB3805P_70591301

© Copyright, Alliance Laundry Systems LLC – DO NOT COPY or TRANSMIT

Hinge Components - Design 5 Models

REF	PART NO.	DESCRIPTION	COMMENTS
1	44088001	Nut	
2	802822	Screw	
3	70058501	Pop Rivet	
4	70632001	Upper Hinge Gusset	
5	70632701W	Door Hinge	White; H, S and U models
	70632701LG	Door Hinge	Light gray; U models
	70632703	Door Hinge	Stainless steel; H, S and U models
	70632707	Door Hinge	Chrome; H, S and U models through 3/31/21
	70632711	Door Hinge	Mirror polish; H, S and U models starting 4/1/21
	70632709B	Door Hinge	Black; B, J and P models
6	70640201	Screw	
7	70639301	Upper Lug Assembly	Use with 2 of item 8; H, S and U models
	70639303	Upper Lug Assembly	Use with 2 of item 8; B, J and P models
8	70640301	Screw	H, S and U models
	F8458801	Screw	B, J and P models
9	70640402	Center Hinge Lug Assembly	
10	70639302	Lower Lug Assembly	Use with 2 of item 8; H, S and U models
	70639304	Lower Lug Assembly	Use with 2 of item 8; B, J and P models
11	44349101	Screw	
12	70632002	Lower Hinge Gusset	

© Copyright, Alliance Laundry Systems LLC – DO NOT COPY or TRANSMIT

False Fronts

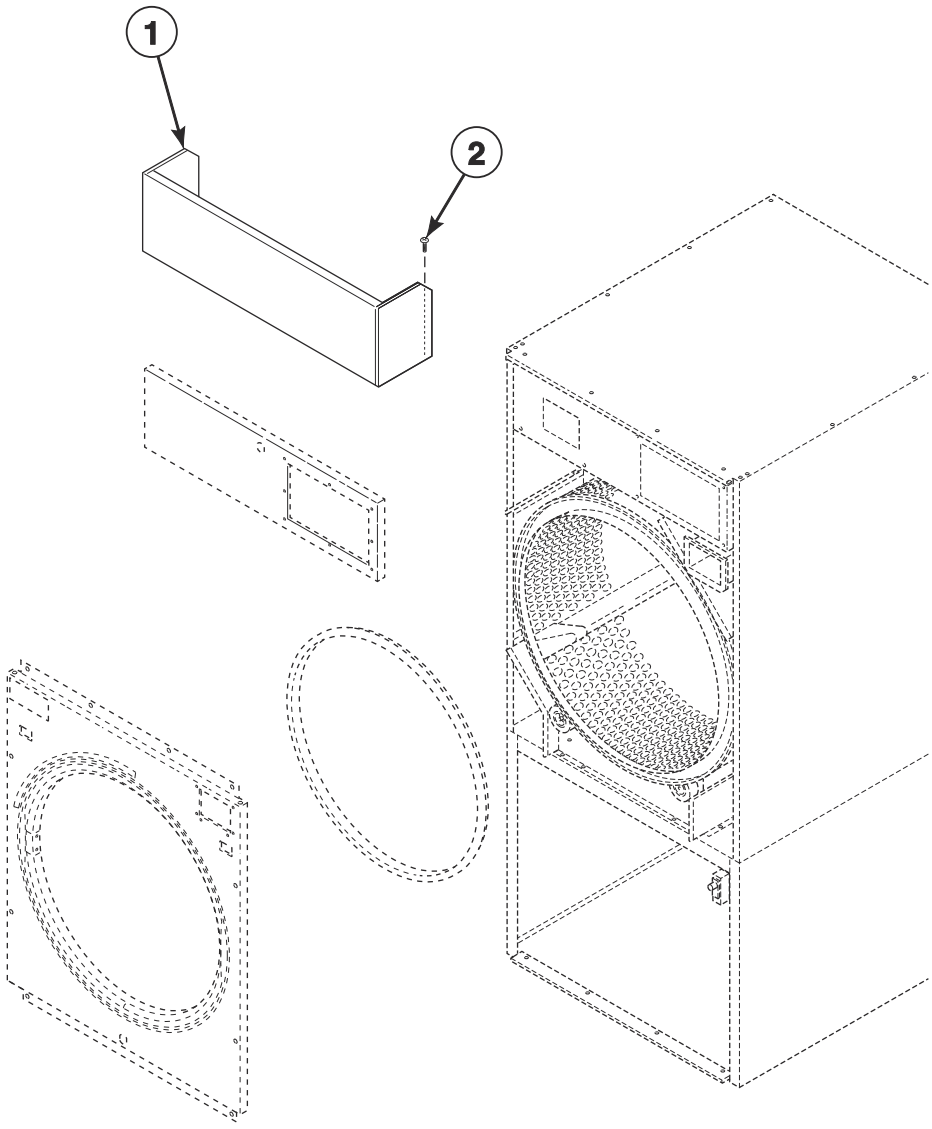

TMB3511P_70591301

© Copyright, Alliance Laundry Systems LLC – DO NOT COPY or TRANSMIT

False Fronts

REF	PART NO.	DESCRIPTION	COMMENTS
1	70000503DG	False Front	Dark gray; P models; 72 inches
	70000503LG	False Front	Light gray; U models; 72 inches
	70000501*P	False Front	All models except P models; 72 inches
	70000504	False Front	72 inches; Stainless steel
	70024203DG	False Front	Dark gray; P models; 76 inches
	70024203LG	False Front	Light gray; U models; 76 inches
	70024201*P	False Front Assembly	All models except P models; 76 inches
	70024204	False Front	76 inches; Stainless steel
2	M405188	Screw	4 required

*** Add Letter To Designate Color. Q - Bisque W - White**

© Copyright, Alliance Laundry Systems LLC – DO NOT COPY or TRANSMIT

Control Panels

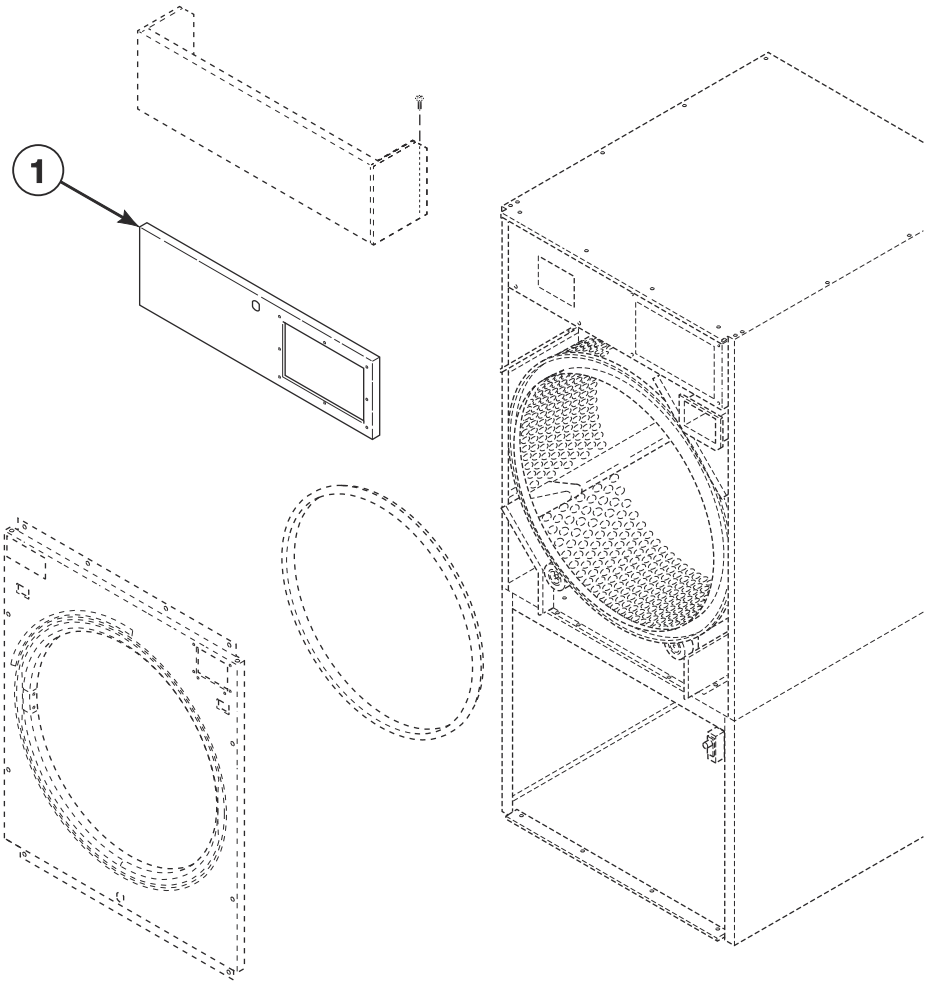

TMB3511PA_70591301

© Copyright, Alliance Laundry Systems LLC – DO NOT COPY or TRANSMIT

Control Panels

REF	PART NO.	DESCRIPTION	COMMENTS
	431318	Control Door Latch	Use with Design 5 H, J and U models
	M400003	Pop Rivet	Use with Design 5 H, J and U models
1	70273308B	Control Panel	B models
	70273315W	Control Panel	U models; Design 5 J models
	70273313	Control Panel	U models; Stainless steel
	70121501W	Control Panel	Design 3 S models through 3/31/21
	70121507W	Control Panel	Design 3 S models starting 4/1/21
	70121508	Control Panel	Design 3 S models; Stainless steel
	70273315LG	Control Panel	U models; Light gray
	70121514DG	Control Panel	P models; Dark gray
	70121505*	Control Panel	H models; Only white available for Design 5; Models through 3/31/21
	70121514W	Control Panel	H models starting 4/1/21
	70121509	Control Panel	H and P models; Stainless steel

*** Add Letter To Designate Color. Q - Bisque W - White**

© Copyright, Alliance Laundry Systems LLC – DO NOT COPY or TRANSMIT

Control Panels - Design 5 S Models

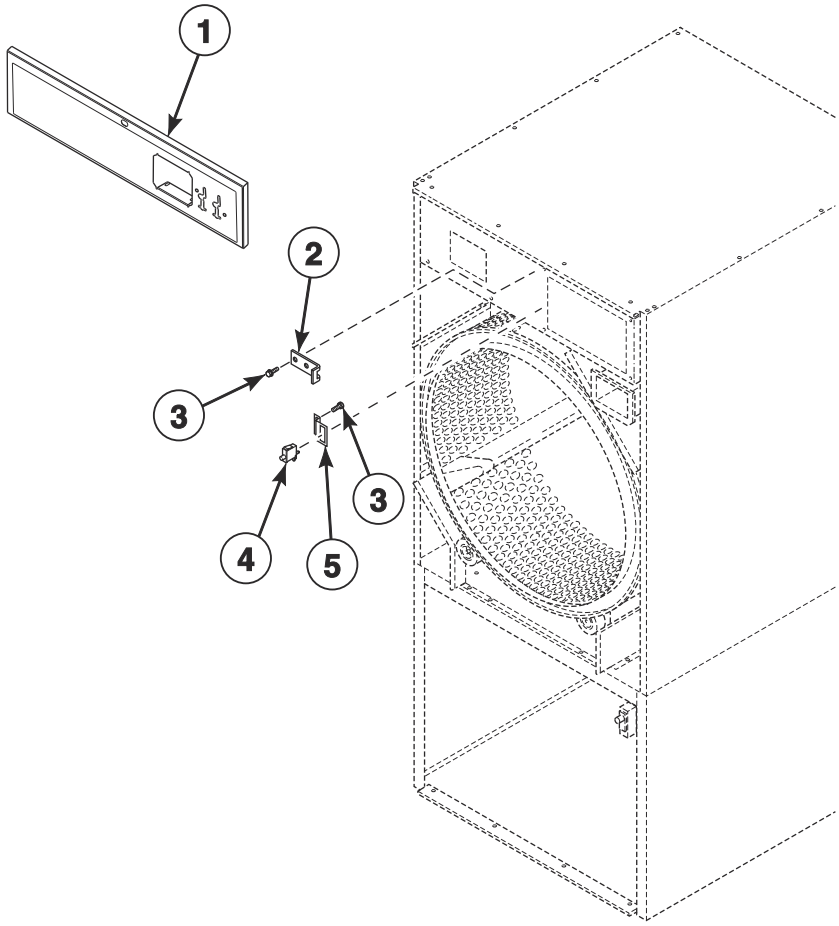

TMB3804P_70591301

© Copyright, Alliance Laundry Systems LLC – DO NOT COPY or TRANSMIT

Control Panels - Design 5 S Models

REF	PART NO.	DESCRIPTION	COMMENTS
1	70639401	Control Assembly	Stainless steel; Coin; Models through 3/31/21
	70639402	Control Assembly	Stainless steel; Card; Models through 3/31/21
	70634703	Control Assembly	Stainless steel; OPL; Models through 3/31/21
	70639403W	Control Assembly	Coin; Models through 3/31/21
	70639404W	Control Assembly	Card; Models through 3/31/21
	70634706W	Control Assembly	OPL; Models through 3/31/21
	70684301	Control Assembly	Stainless steel; Coin; Models starting 4/1/21
	70684302	Control Assembly	Stainless steel; Card; Models starting 4/1/21
	70684203	Control Assembly	Stainless steel; OPL; Models starting 4/1/21
	70684303W	Control Assembly	Coin; Models starting 4/1/21
	70684304W	Control Assembly	Card; Models starting 4/1/21
	70684206W	Control Assembly	OPL; Models starting 4/1/21
2	70654501	Lock Catch Bracket	Models through 3/31/21
3	430497	Screw	
4	70413301	Pushbutton Switch	
5	70641601	Control Panel Switch Bracket	

© Copyright, Alliance Laundry Systems LLC – DO NOT COPY or TRANSMIT

Front Panel Assemblies - Design 3 Models

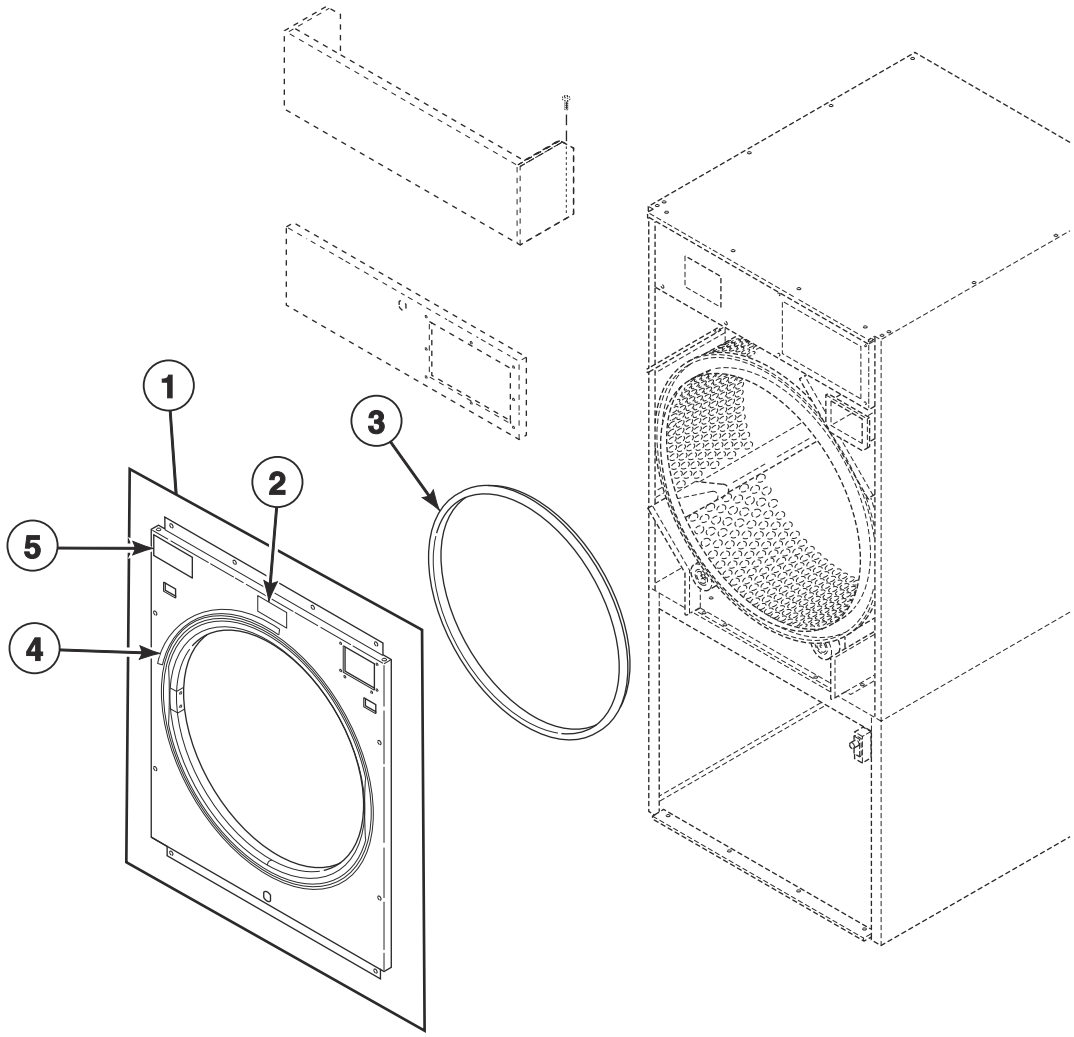

TMB3642P_70591301

© Copyright, Alliance Laundry Systems LLC – DO NOT COPY or TRANSMIT

Front Panel Assemblies - Design 3 Models

REF	PART NO.	DESCRIPTION	COMMENTS
1	70602001*	Front Panel	All models except P and U models; Coin; Models through 3/31/21
	70602002W	Front Panel Assembly	All models except P and U models; Coin; Models starting 4/1/21
	70602301*	Front Panel	S models; Coin; Hinged lint door; Models through 3/31/21
	70602302W	Front Panel Assembly	S models; Coin; Hinged lint door; Models starting 4/1/21
	70602501DG	Front Panel Assembly	P models; Coin; Dark gray
	70601501	Front Panel Assembly	All models except P and U models; Coin; Stainless steel
	70601701	Front Panel	S models; Coin; Hinged lint door; Stainless steel
	70602102W	Front Panel Assembly	All models except P and U models; Card and central pay
	70576002DG	Front Panel Assembly	P models; Card and central pay; Dark gray
	70601601	Front Panel Assembly	All models except P and U models; Card and central pay; Stainless steel
	44115902	Front Panel Assembly	S models; Card; Hinged lint door; Stainless steel
	70602702W	Front Panel Assembly	OPL; With e-stop
	70602801DG	Front Panel Assembly	P models; OPL; Dark gray; With e-stop
	70602801LG	Front Panel	U models; OPL; Light gray; With e-stop
	70601901	Front Panel Assembly	OPL; Stainless steel; With e-stop
	70602202W	Front Panel Assembly	S card models with hinged lint door; OPL models without e-stop
	70524115DG	Front Panel	P models; OPL; Dark gray; Without e-stop
	70524115LG	Front Panel	U models; OPL; Light gray; Without e-stop
	70524106	Front Panel	OPL; Stainless steel; Without e-stop
2	70472801	Label	U models
3	70173401P	Front Panel Seal	
4	70534301	Warning Label	English
	70534302	Warning Label	French
	70534300	Label Kit	Warning; IEC models
5	70537001	Label	B, H, S and U models; C.A.R.E.
	44190901	Label	P models; Safe Tech

*** Add Letter To Designate Color. Q - Bisque W - White**

© Copyright, Alliance Laundry Systems LLC – DO NOT COPY or TRANSMIT

Front Panel Assemblies - Design 5 Models

B, H, J, P, S and U Models

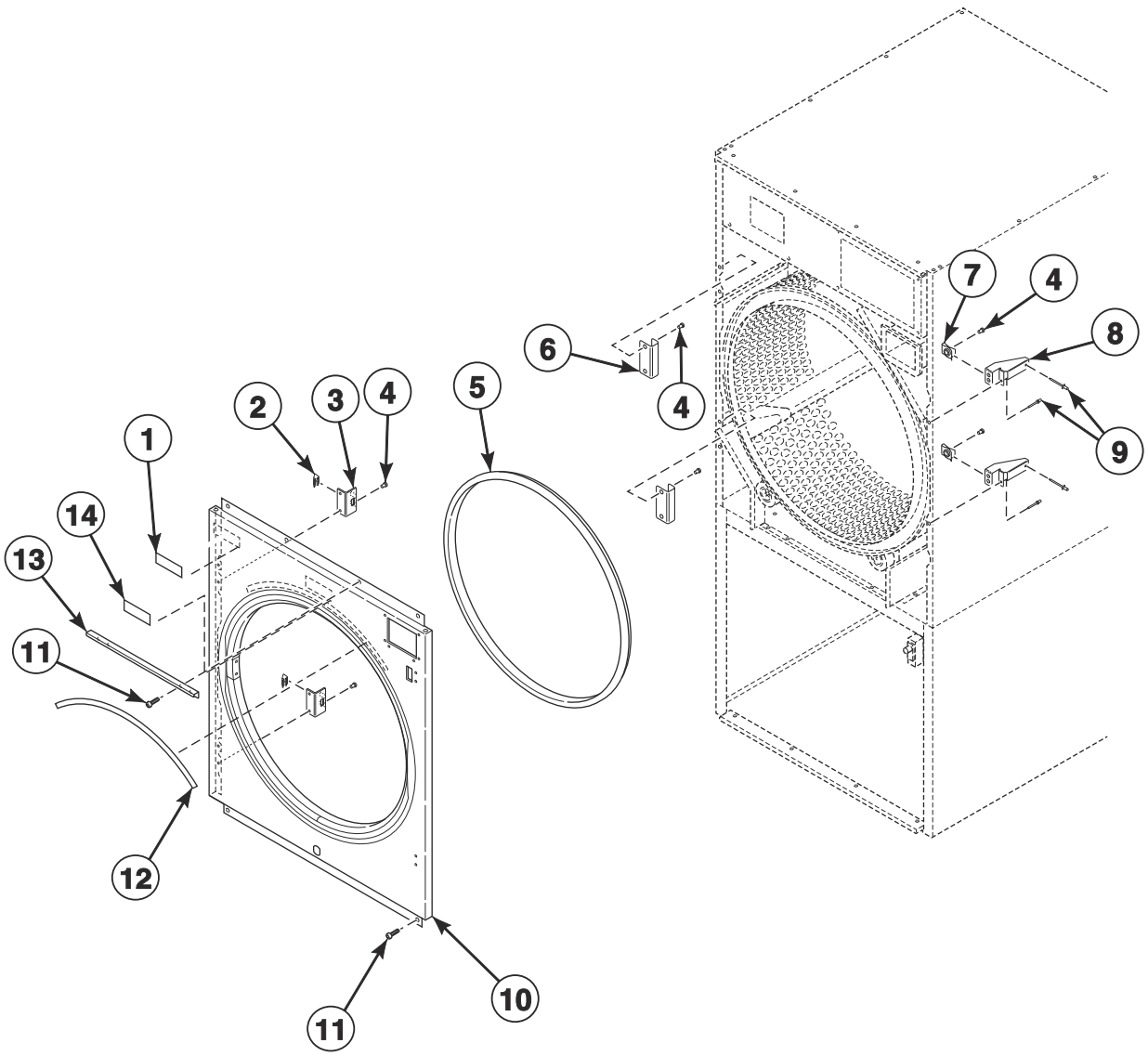

TMB3806P_70591301

© Copyright, Alliance Laundry Systems LLC – DO NOT COPY or TRANSMIT

Front Panel Assemblies - Design 5 Models

REF	PART NO.	DESCRIPTION	COMMENTS
	70289101P	Gasket	Sold per foot; Use behind item 10
1	70537001	Label	C.A.R.E.; B, H, P and S models
2	35865	Hold-Down Clip	2 required
3	70604801	Clip Mount Bracket	2 required
4	70058501	Pop Rivet	
5	70173401P	Front Panel Seal	
6	70604901	Clip Keeper Bracket	2 required
7	70030401	Nut	2 required
8	70634201	Bracket	
9	70614201	Rivet	
10	70705201	Front Panel Assembly	Stainless steel; Coin; B, H, P and S models
	70705202	Front Panel Assembly	Stainless steel; Card, central pay and OPL; Without e-stop; B, H, P and S models
	70705204	Front Panel Assembly	Stainless steel; OPL; With e-stop; B and P models
	70705203	Front Panel Assembly	Stainless steel; Card; Hinged lint door; S models
	70705205	Front Panel Assembly	Stainless steel; Coin; Hinged lint door; S models
	70705203LG	Front Panel Assembly	U models; Light gray; OPL
	70705201W	Front Panel Assembly	Coin; B, H, J, P and S models
	70705202W	Front Panel Assembly	Card, central pay and OPL; B, H, P and S models
	70705203W	Front Panel Assembly	Card; Hinged lint door; S models
	70705205W	Front Panel Assembly	Coin; Hinged lint door; S models
	70705204W	Front Panel Assembly	OPL; With e-stop; B, H, P, S and U models
11	M411072	Screw	
12	70534301	Warning Label	English
	70534302	Warning Label	French
13	70641501	Control Panel Stand Bracket	S models
14	70472801	Label	U models

© Copyright, Alliance Laundry Systems LLC – DO NOT COPY or TRANSMIT

Cabinet Front Components

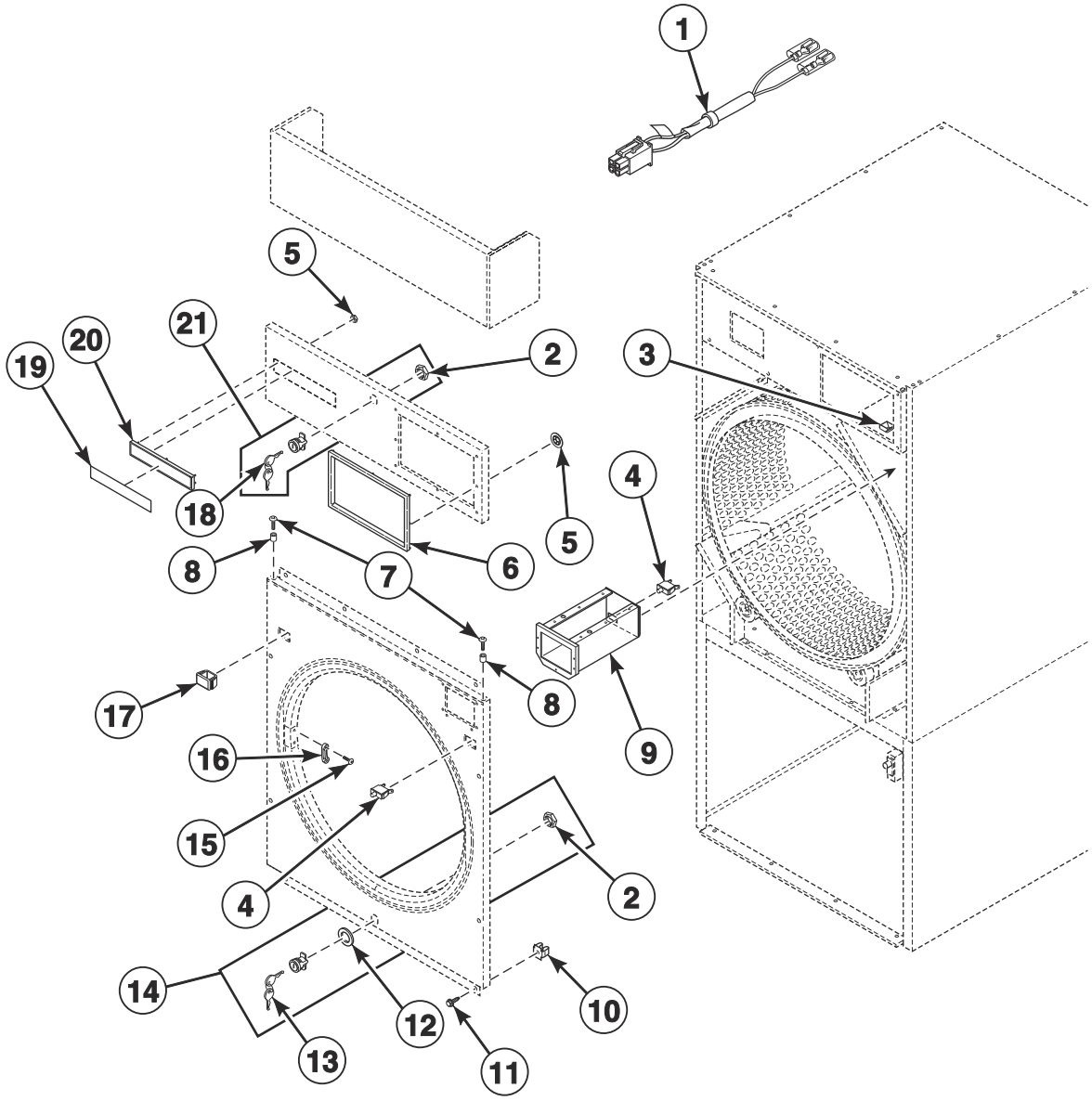

TMB3592P_70591301

© Copyright, Alliance Laundry Systems LLC – DO NOT COPY or TRANSMIT

Cabinet Front Components

REF	PART NO.	DESCRIPTION	COMMENTS
	44334103	Bypass Harness	Card and central pay
	D511476	Jumper Harness	Card reader present
	70482901	Door Catch Kit	
1	44334101	Coin Vault Switch Harness	
2	44088801	Nut	
3	70296401	Coin Chute Assembly	
4	70413301	Pushbutton Switch	
5	M400977	Nut	S models; 6 required; Design 3
6	70529401	Control Trim	H models; Gray
	44016401	Control Trim	P models; Design 3 S models; Black
7	39733	Screw	
8	56079	Panel Locator	9 required
9	70529501	Coin Vault Assembly	
	70529502	Coin Vault and Emergency Stop Mount Assembly	Models with emergency stop
	F160673P	Coin Box	Optional equipment; Includes lock and key
10	70030501	Expansion Clip	8 required
11	M411072	Screw	8 required
12	70342401	Lock Shim	
13	70155602	Key	RL002
14	70722301	Lock, Key and Nut Kit	RL002
	44089305	Panel Lock	RL002; Chrome
15	44166601	Pop Rivet	
16	M401223	Door Latch	
17	44057801W	Switch Hole Plug	White; Design 3 models
	44057801Q	Switch Hole Plug	Bisque; Design 3 models
	44057801LG	Switch Hole Plug	Gray; U models; Design 3
	44057801B	Switch Hole Plug	Black; Design 3 models
18	70155601	Key	RL001
19	70115601	Nameplate Overlay	S models; Design 3
	F8688801	Nameplate	S models; Design 5
	F8688001	Nameplate	H models; Design 5
	F8443105	Nameplate	U models
	B12389801	Nameplate	B models
	567887	Nameplate	P models
	70685701	Nameplate	J models
20	70117401	Nameplate Bezel	S models; Design 3
21	70733701	Lock, Key and Nut Kit	RL001; Black
	44089304	Panel Lock	RL001; Chrome

© Copyright, Alliance Laundry Systems LLC – DO NOT COPY or TRANSMIT

Emergency Stop Button - OPL Models

A, H, J, K, L, R and U in the 2nd Position
G and T in the 2nd Position Through 12/31/18

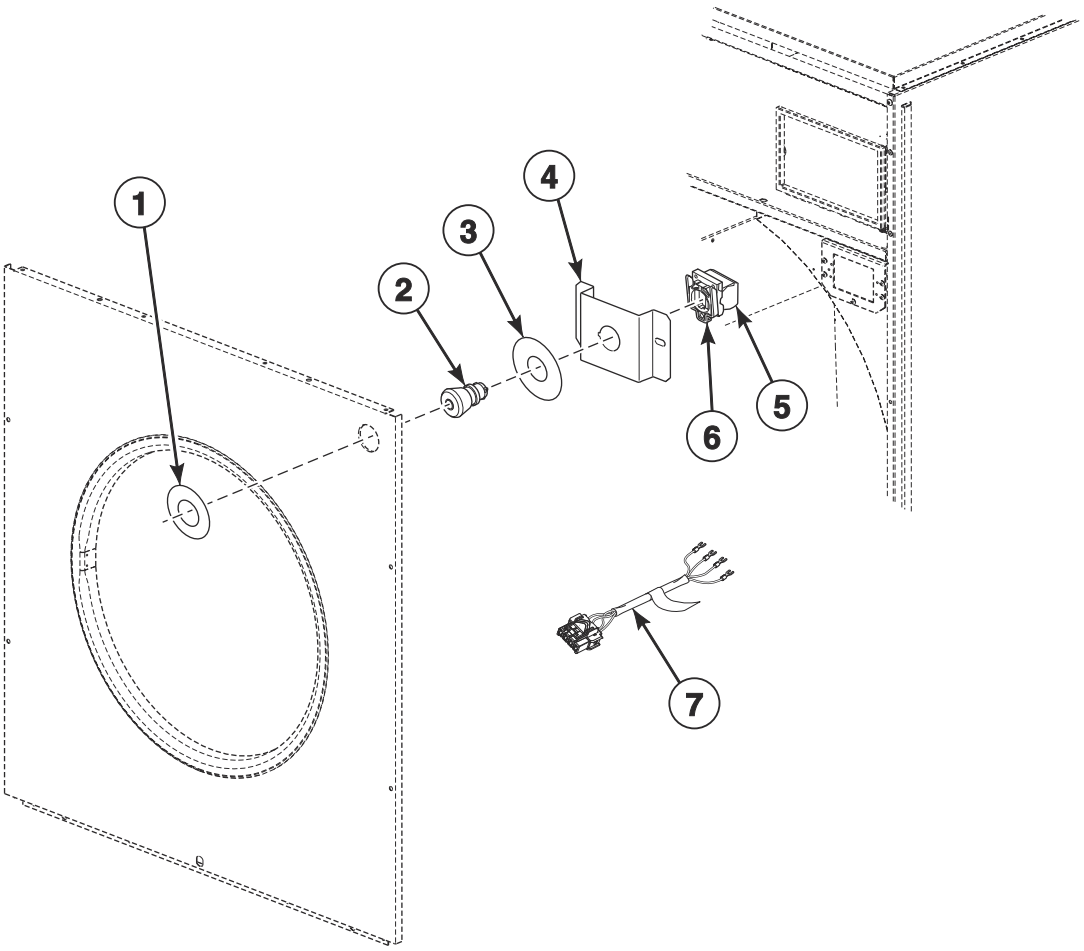

TMB3513P_70591301

© Copyright, Alliance Laundry Systems LLC – DO NOT COPY or TRANSMIT

Emergency Stop Button - OPL Models

REF	PART NO.	DESCRIPTION	COMMENTS
	70580301	Emergency Stop Button Kit	Includes items 2-4
	F8519403	Emergency Stop Bypass Harness	Coin, card and central pay
1	44012903	Emergency Stop Label	
2	F200233500	Emergency Stop Pushbutton	
3	44012901	Emergency Stop Label	
4	70550401	Emergency Stop Mounting Bracket	
5	F8069501	Contact Switch	2 required
6	F8538101	Contact Base	
7	44272401	Emergency Stop Harness	

© Copyright, Alliance Laundry Systems LLC – DO NOT COPY or TRANSMIT

Lower Cabinet Components

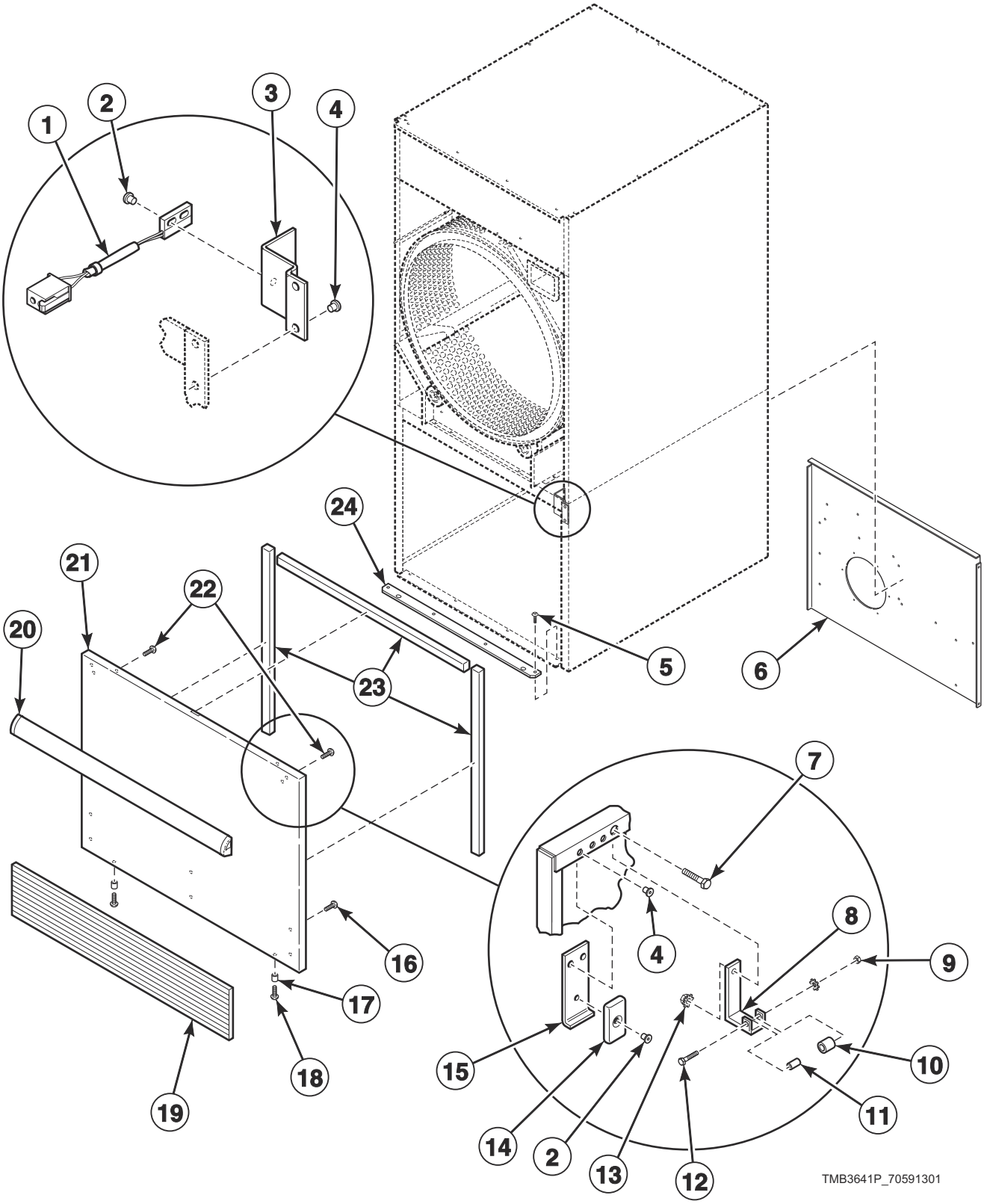

© Copyright, Alliance Laundry Systems LLC – DO NOT COPY or TRANSMIT

Lower Cabinet Components

REF	PART NO.	DESCRIPTION	COMMENTS
1	F8066804	Reed Switch Assembly	
2	70743501	Rivet	
3	70508501	Switch Bracket	
4	70058501	Pop Rivet	
5	430497	Screw	
6	70565301	Rear Lint Panel	
7	70132301	Screw	Attaching roller catch
8	70030301	Roller Catch Arm	
9	23951	Nut	
10	70297601	Roller Catch Wheel	
11	70030201	Roller Catch Spacer	
12	70072801	Screw	
13	51236	Nut	Attaching roller catch
14	70343101	Magnet	
15	44290501	Magnet Bracket	
16	70126301	Pop Rivet	For attaching kickplate; Black; 6 required
	70126401	Pop Rivet	For attaching kickplate; Gray; 6 required
17	56079	Panel Locator	
18	39733	Screw	
19	70117616	Kickplate	H and U models; Dark gray; Design 3
	70117601	Kickplate	All models except H models; Black; Design 3
20	70154401	Handle and Caps Assembly	B, J, S and U models; P models with white and stainless steel front panel; Black
	70407207	Handle Bumper	P models; Silver
	70154413	Handle and Caps Assembly	H and U models; Dark gray
21	70515403W	Lint Panel	All models except P models; Design 3
	70515403LG	Lint Panel	Design 3 U models; Light gray
	70515404DG	Lint Panel	P models; Dark gray
	70515402	Lint Panel	All models except B, J and P models; Design 3; Stainless steel
	70515405	Lint Panel	B and P models; Design 5 H, S and U models; Stainless steel; No kickplate
	70515404LG	Lint Panel	Design 5 U models; Light gray; No kickplate
	70515406W	Lint Panel	Design 5 H, J, S and U models; No kickplate; Models through 3/31/21
	70515404W	Lint Panel	Design 5 H, J, S and U models; No kickplate; Models starting 4/1/21
22	430757	Screw	For attaching handle; 6 required
23	70289101P	Gasket	Sold per foot
24	70017901	Lint Panel Pivot Plate	

*** Add Letter To Designate Color. Q - Bisque W - White**

© Copyright, Alliance Laundry Systems LLC – DO NOT COPY or TRANSMIT

Lower Cabinet Components - S Models with Hinged Lint Door

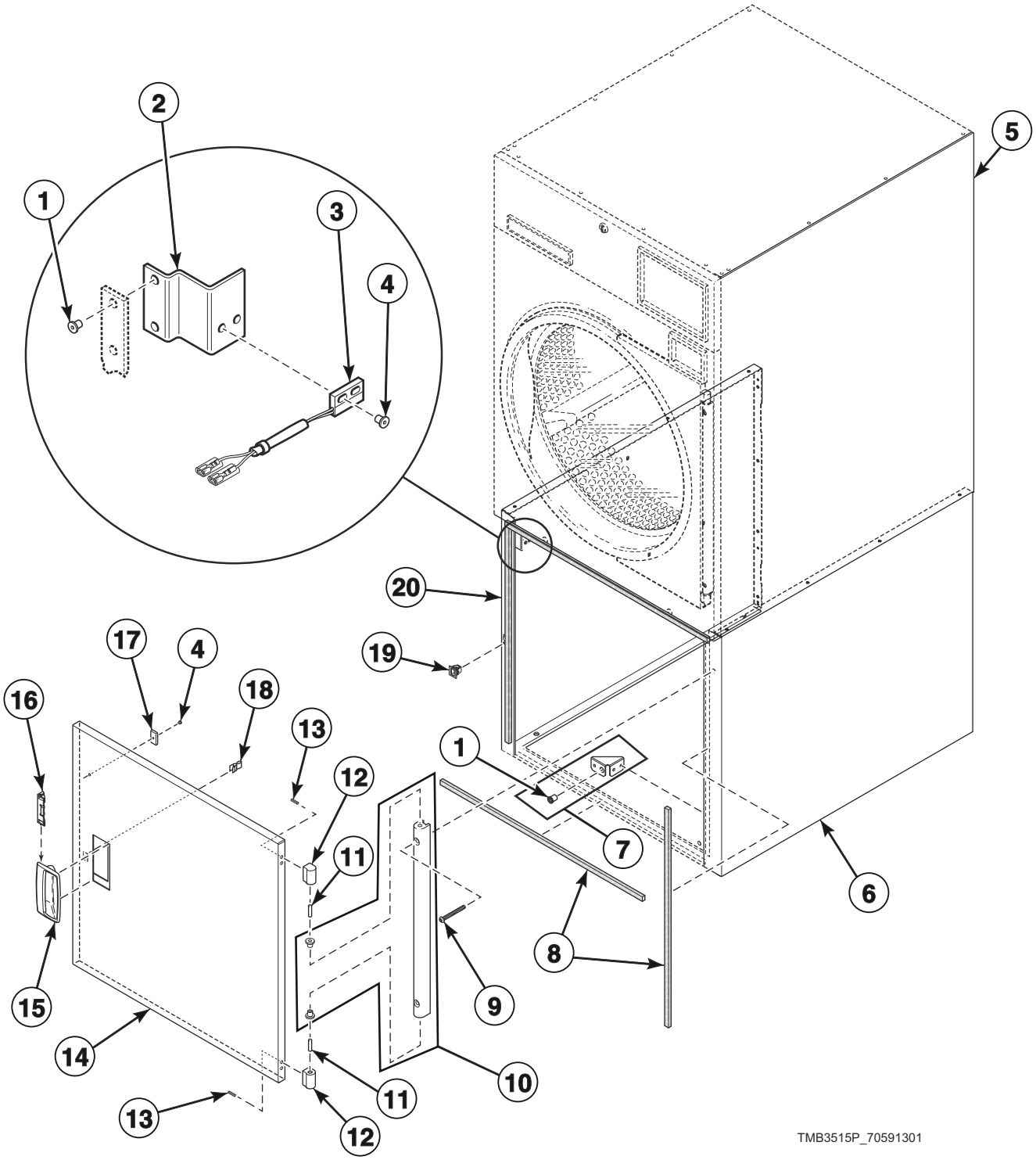

© Copyright, Alliance Laundry Systems LLC – DO NOT COPY or TRANSMIT

Lower Cabinet Components - S Models with Hinged Lint Door

REF	PART NO.	DESCRIPTION	COMMENTS
1	70058501	Pop Rivet	
2	70508501	Switch Bracket	
3	F8066804	Reed Switch Assembly	
4	70743501	Rivet	
5	70021502*P	Side Panel	Upper
6	70553301*	Panel	Right; Lower
7	70283801	Support Bracket Assembly	2 required
8	70247601	Gasket	8 required; Felt
9	70033502	Screw	2 required
10	44035001	Door Hinge Lug Assembly	
11	70071401	Pin	2 required
12	M4772P3	Hinge Cam Kit	2 required
13	70442101	Screw	4 required
14	70267703	Hinged Door	Stainless steel
	70267701*P	Hinged Door	
15	D510103*P	Door Pull and Wedge Kit	
	D511213P	Door Pull and Wedge Kit	Black
16	D510129W	Door Handle Wedge	
17	70343101	Magnet	
18	D510181	Door Strike	
19	D510177	Door Catch Assembly	
20	70553401*	Panel	Left; Lower

*** Add Letter To Designate Color. Q - Bisque W - White**

© Copyright, Alliance Laundry Systems LLC – DO NOT COPY or TRANSMIT

Cylinder and Trunnion Assembly

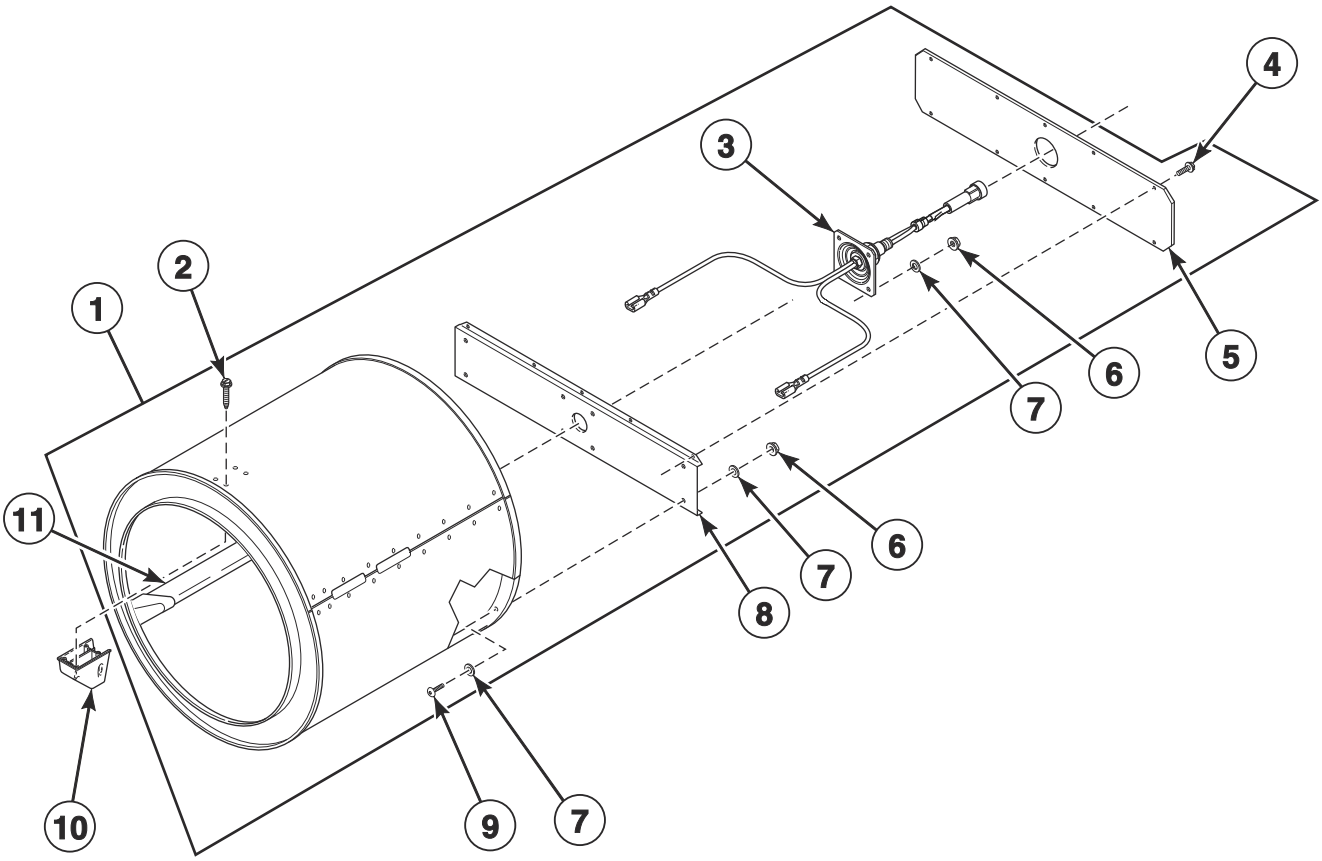

TMB3358P_70591301

© Copyright, Alliance Laundry Systems LLC – DO NOT COPY or TRANSMIT

Cylinder and Trunnion Assembly

REF	PART NO.	DESCRIPTION	COMMENTS
	70343101P	Drywall Screw Magnet Kit	
1	70372701P	Cylinder Assembly	Galvanized; Non-moisture sensing
	70443801	Cylinder and Trunnion Assembly	Galvanized; Moisture sensing
	70372702P	Cylinder Assembly	Stainless steel; Non-moisture sensing
	70443802	Cylinder and Trunnion Assembly	Stainless steel; Moisture sensing
2	62588	Screw	12 required
3	70564801	Trunnion and Seal Kit	Includes 70013702 Rear Cylinder Seal; Non-moisture sensing
	70564802	Trunnion and Seal Kit	Moisture sensing; Includes 70454601 Trunnion and Wire Assembly
4	430497	Screw	10 required
5	70257401	Rear Cylinder Channel Plate	
6	44087201	Nut	8 required
7	70411301	Washer	
8	70257301	Rear Cylinder Channel	Non-moisture sensing
	70257302	Rear Cylinder Channel	Moisture sensing
9	70391101	Screw	8 required
10	70070101	End Cap	Non-moisture sensing
	70070102	End Cap	Moisture sensing
11	70433001	Cylinder Rib Assembly	Moisture sensing
	70327101	Cylinder Rib Assembly	Non-moisture sensing; Galvanized
	70327102	Cylinder Rib Assembly	Non-moisture sensing; Stainless steel

© Copyright, Alliance Laundry Systems LLC – DO NOT COPY or TRANSMIT

Moisture Sensing Components

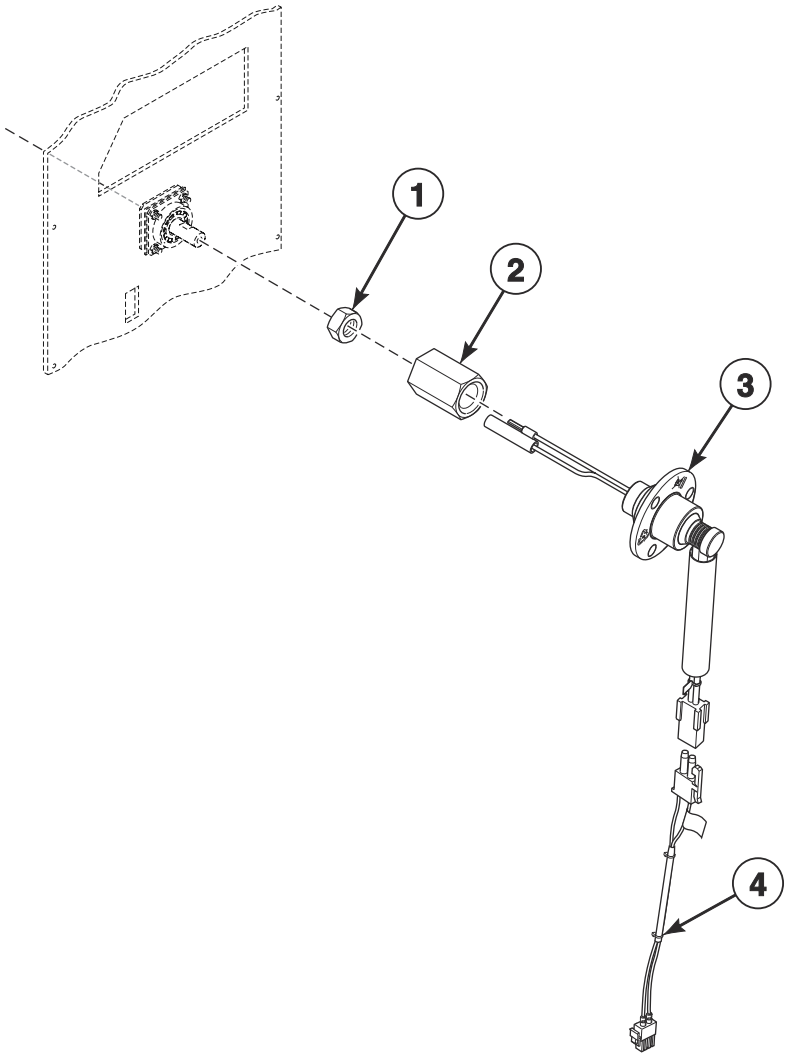

TMB3147P_70591301

© Copyright, Alliance Laundry Systems LLC – DO NOT COPY or TRANSMIT

Moisture Sensing Components

REF	PART NO.	DESCRIPTION	COMMENTS
1	M400022	Nut	
2	70455401	Slip Ring Holder	
3	44222702	Slip Ring Assembly	
4	44333903	Moisture Sensor Harness	

© Copyright, Alliance Laundry Systems LLC – DO NOT COPY or TRANSMIT

Cylinder Components

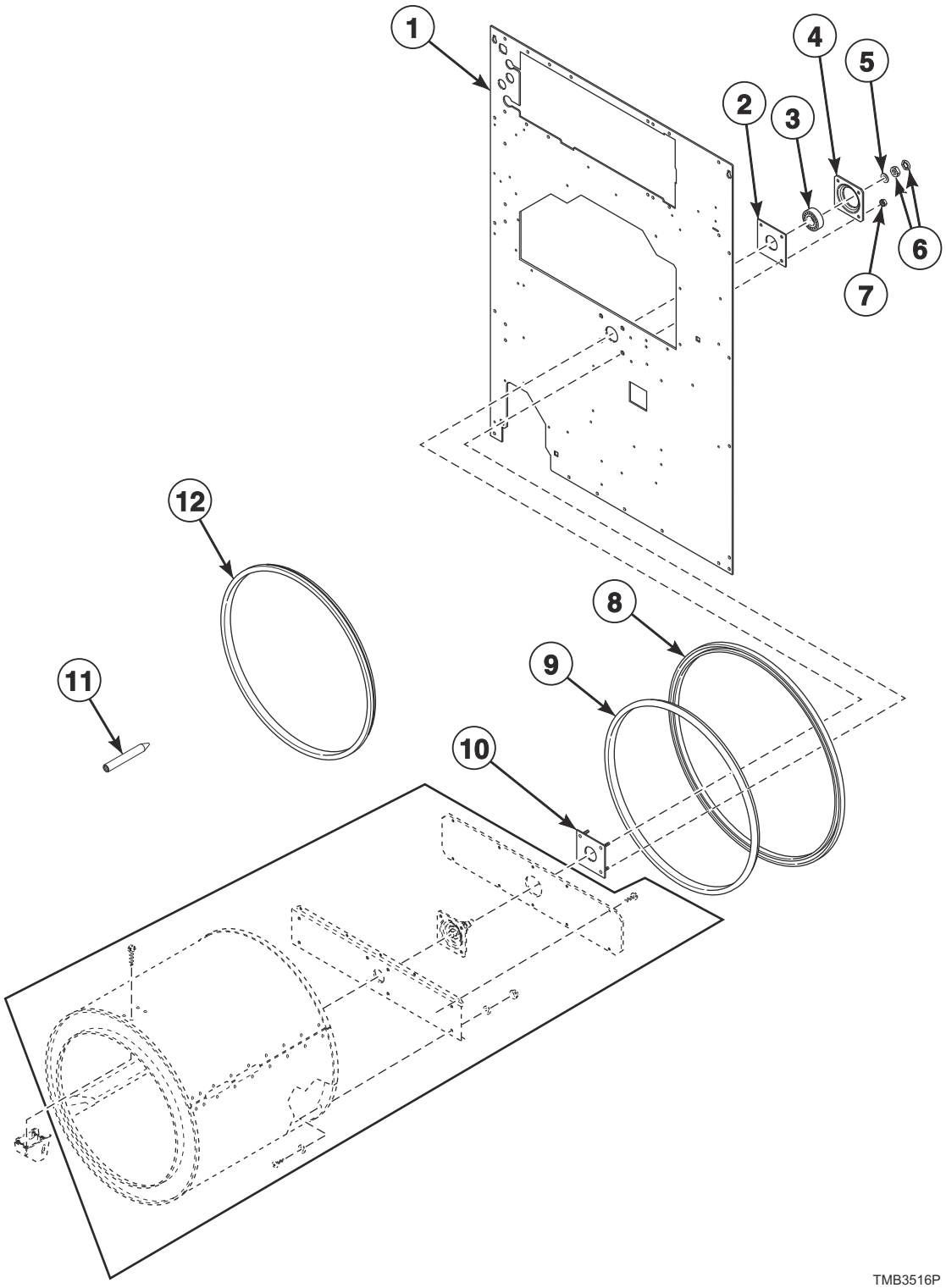

© Copyright, Alliance Laundry Systems LLC – DO NOT COPY or TRANSMIT

Cylinder Components

REF	PART NO.	DESCRIPTION	COMMENTS
	70343101P	Drywall Screw Magnet Kit	
	430260P	Support Housing Bearing Assembly	Includes items 3, 4 and Loctite
1	70564901	Rear Panel	Gas models
	70564903	Rear Panel	Gas models; With fire suppression
	70564902	Rear Panel	Electric and steam models
	70564904	Rear Panel	Steam models; With fire suppression
2	70355001	Rear Bearing Shim	
3	70448701	Support Bearing	
4	70013901	Rear Cylinder Bearing Housing	
5	M400991	Washer	
6	M400022	Nut	
7	M412986	Nut	4 required
8	70506401	Rear Cylinder Seal Support	
9	70013702	Rear Cylinder Seal	Use with D511637P Adhesive
10	430352	Cylinder Bearing Stud Plate Assembly	
11	263P4	Cylinder Guide Tool	
12	70066004	Center Cylinder Seal	

© Copyright, Alliance Laundry Systems LLC – DO NOT COPY or TRANSMIT

Cabinet Components

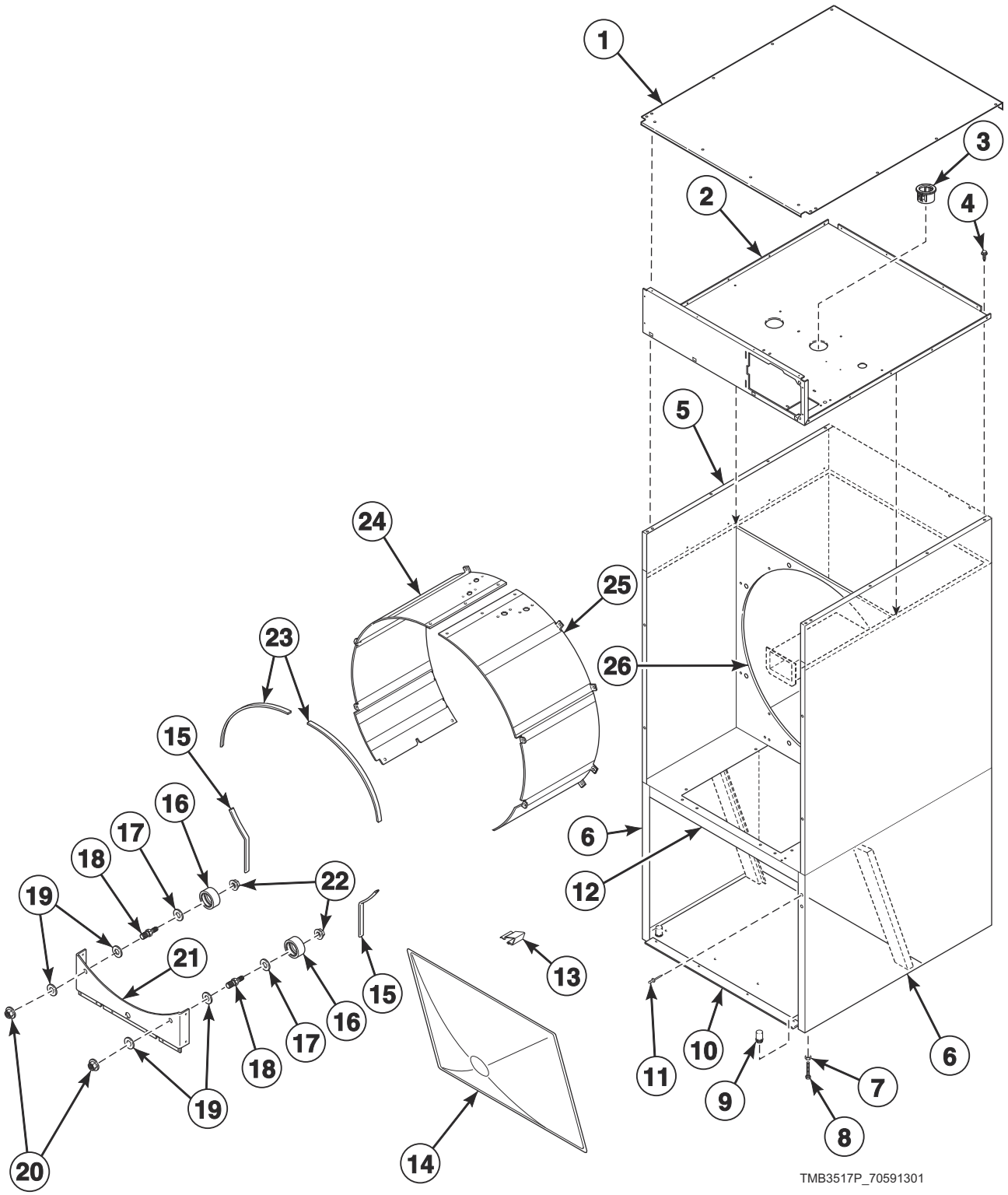

© Copyright, Alliance Laundry Systems LLC – DO NOT COPY or TRANSMIT

Cabinet Components

REF	PART NO.	DESCRIPTION	COMMENTS
	M4379P4	Tumbler Dolly Kit	
	298P4P	Spray Paint	White
	381P4	Spray Paint	Bisque
	122P4P	Porcelain Touch-Up Paint	White
	370P4P	Porcelain Touch-Up Paint	Bisque
1	70557601	Flat Top	Design 3 models; Design 5 B, H, J, P and U models; Design 5 S models starting 4/1/21
	70586401	Top Panel	Design 5 S models through 3/31/21
2	70641201	Top Pan	
3	70346501	Bushing	
4	430497	Screw	
5	70021504DG	Side Panel	Dark gray; Design 3 P models; Upper
	70640901DG	Side Panel	Dark gray; Design 5 P models; Upper; Models through 3/31/21
	70640902DG	Side Panel	Dark gray; Design 5 P models; Upper; Models starting 4/1/21
	70021502LG	Side Panel	Light gray; Design 3 U models; Upper
	70021502*P	Side Panel	All models except J and P models; Design 3; Upper; Models through 3/31/21
	70021504W	Side Panel	All models except J and P models; Design 3; Upper; Models starting 4/1/21
	70640901LG	Side Panel	Light gray; Design 5 U models; Upper
	70640902W	Side Panel	Design 5 H, J, S and U models; Upper
6	70253801DG	Side Panel	Dark gray; P models; Lower; Models through 3/31/21
	70253802DG	Side Panel	Dark gray; P models; Lower; Models starting 4/1/21
	70253801LG	Side Panel	Light gray; U models; Lower
	70253801*P	Side Panel	All models except J and P models; Lower; Models through 3/31/21
	70253802W	Side Panel	All models except P models; Lower; Models starting 4/1/21
7	21899	Nut	
8	70247701	Screw	
9	70063201	Hole Plug	
10	70332401P	Lower Pan	
11	70058501	Pop Rivet	16 required; Upper side panel
12	70565201	Center Pan	
13	35865	Hold-Down Clip	
14	70325601	Lint Screen	
15	70015709	Sheet Metal Edge Gasket	Lower
16	70616701	Roller and Seal Kit	
17	70443601	Roller Seal	
18	70249501	Roller Shaft	
19	70261401	Washer	
20	M404993	Nut	
21	70328301	Roller Support Bracket	
22	430576	Nut	
23	70015710	Sheet Metal Edge Gasket	Upper
24	70432303	Cylinder Shroud	Left; With fire suppression
	70347202	Cylinder Shroud	Left
25	70432304	Cylinder Shroud	Right; With fire suppression
	70347201	Cylinder Shroud	Right
26	70252601	Center Partition	

*** Add Letter To Designate Color. Q - Bisque W - White**

© Copyright, Alliance Laundry Systems LLC – DO NOT COPY or TRANSMIT

Fire Suppression System Components

Gas and Steam Models

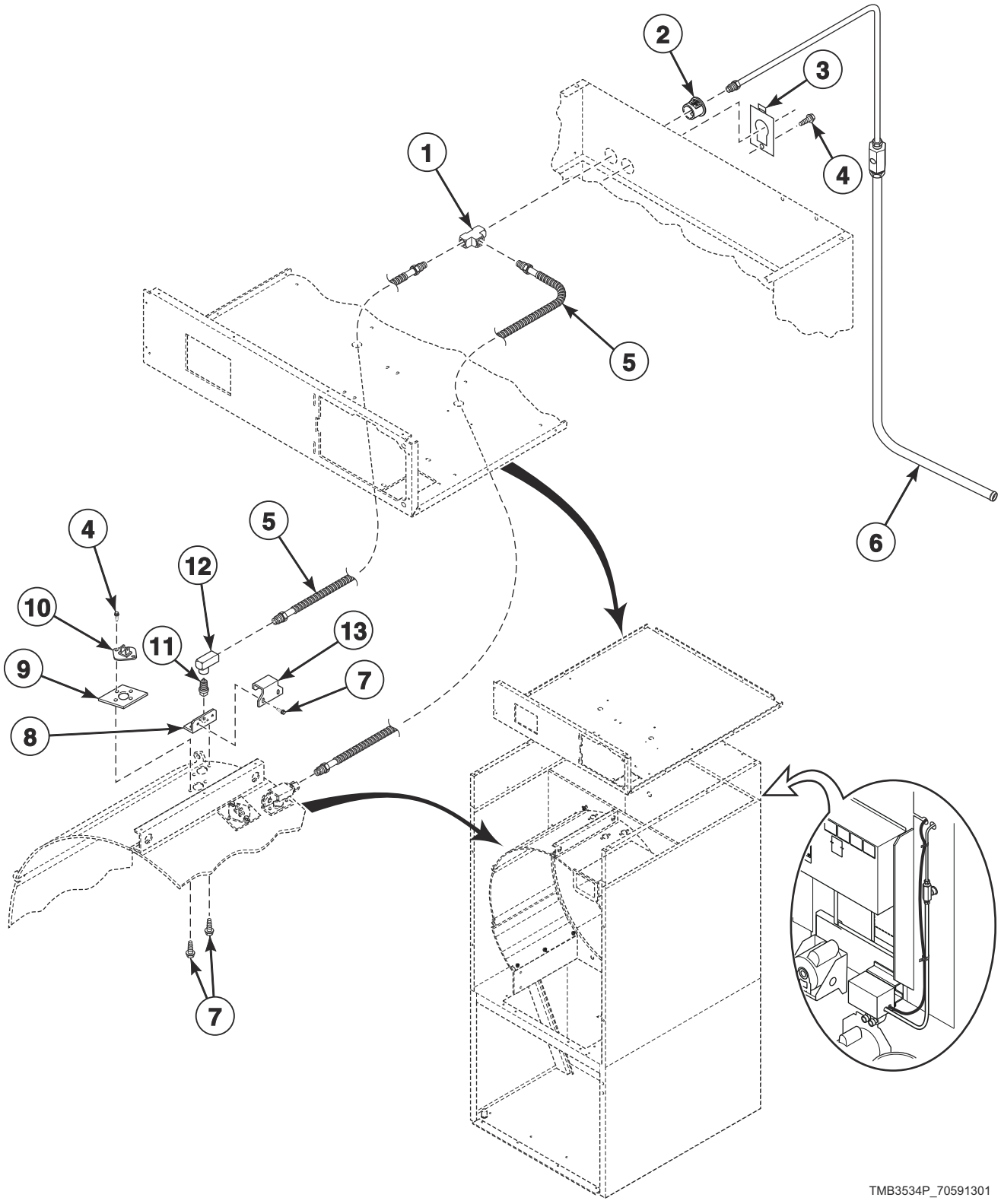

© Copyright, Alliance Laundry Systems LLC – DO NOT COPY or TRANSMIT

Fire Suppression System Components

REF	PART NO.	DESCRIPTION	COMMENTS
1	70427901	Union Tee	
2	70178701	Snap Bushing	
3	70523301	Harness Adapter Plate	
4	51780	Screw	4 required
5	70427701	Spray Nozzle Hose	2 required
6	70427601	Tube Assembly	
7	430497	Screw	12 required
8	70424201	Nozzle Bracket	2 required
9	70424401	Thermistor Plate	2 required
10	44064701	Thermistor	2 required
11	70427801	Spray Nozzle	2 required
12	70428101	Elbow	2 required
13	70428601	Nozzle Bracket	2 required

© Copyright, Alliance Laundry Systems LLC – DO NOT COPY or TRANSMIT

Fire Suppression System Control Box

Gas and Steam Models

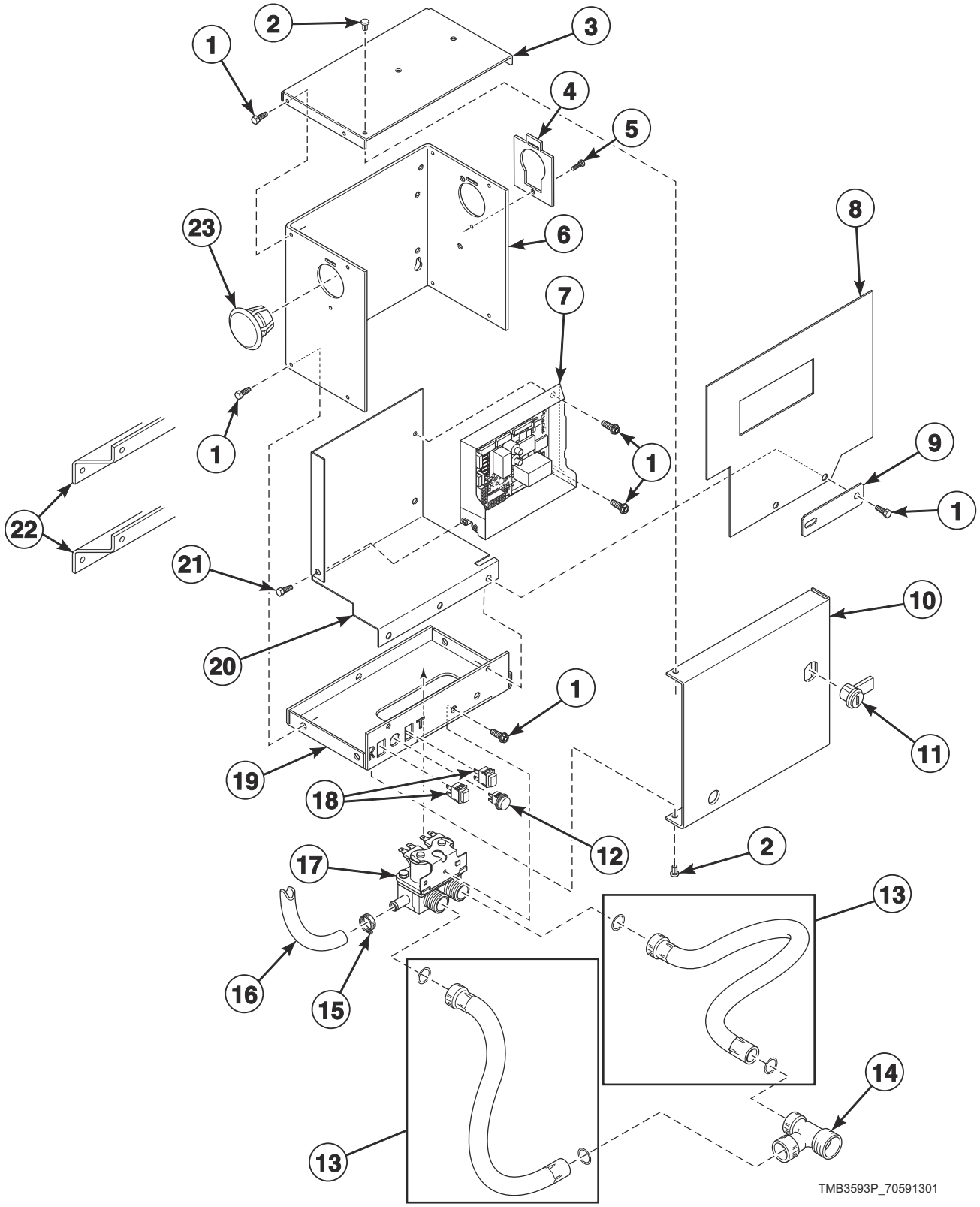

© Copyright, Alliance Laundry Systems LLC – DO NOT COPY or TRANSMIT

Fire Suppression System Control Box

REF	PART NO.	DESCRIPTION	COMMENTS
	44340301	Cold Weather Kit	
	70155601	Key	RL001; Use with item 11
	44334404	Control Harness	
	44334405	Water Valve Harness	
	44334402	Power Sensor Harness	
	44334401	Interconnect Harness	
	44334406	Sensor Harness	
	44324501	Warning Label	F.S.S.; North America models
	44324500	Label Kit	F.S.S.; IEC models
	F8614401	Shock Warning Label	North America models
	F8614201	Shock Warning Label	IEC models
	44318200	Label Kit	IEC models
	44324502	Warning Label	
	44318201	Label	North America models
1	430497	Screw	
2	M400713	Drive Rivet	
3	44307101	Control Box Top	
4	70523301	Harness Adapter Plate	
5	51780	Screw	
6	44306701	Control Box Housing	
7	70511601	Control	
8	44326801	Shield	
9	70551701	Filter Mounting Plate	
10	44065201	Control Box Cover	
11	70733701	Lock, Key and Nut Kit	RL001 key code; Optional if same key is to be used for control lock
12	801432	Light	
13	202799	Fill Hose	2 required; GHT
	202800	Fill Hose	2 required; BSPP
14	44069101	Hose Fitting	North America models
15	36801	Hose Clamp	
16	44073304	Hose	14 inches; Outlet hose
17	70519801	Mixing Valve	
18	801434W	Push-to-Start Switch	2 required
19	44065301	Control Box Base	
20	44306601	Mixing Valve Shield Bracket	
21	804608	Screw	
22	70601401	Mounting Bracket	
23	70180001	Plug	

© Copyright, Alliance Laundry Systems LLC – DO NOT COPY or TRANSMIT

Motor Components

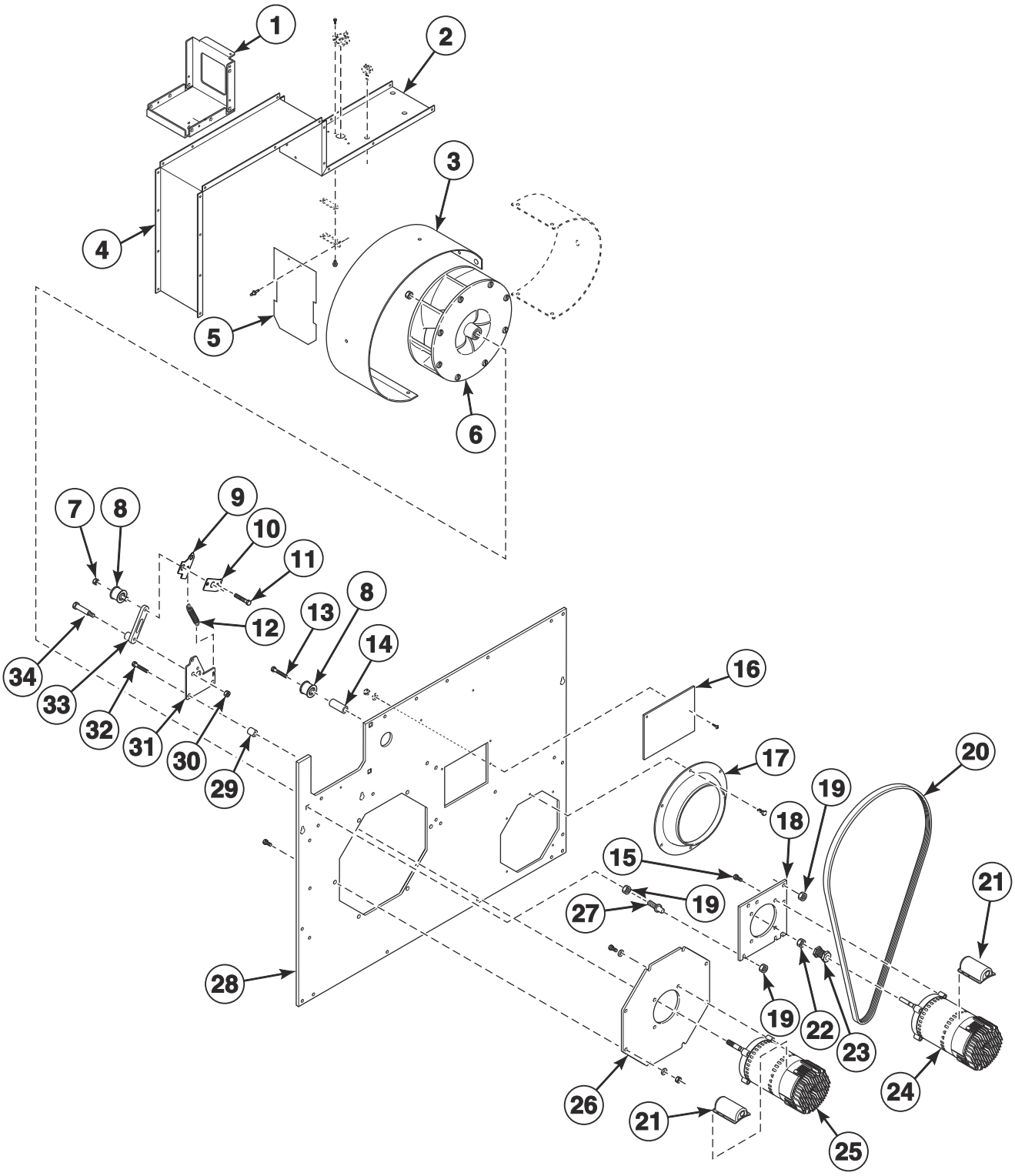

© Copyright, Alliance Laundry Systems LLC – DO NOT COPY or TRANSMIT

Motor Components

REF	PART NO.	DESCRIPTION	COMMENTS
1	70564101	Motor Mount Bracket	
2	70554701	Blower Housing	Top
3	70016301	Blower Housing Scroll	
4	70215101	Blower Housing	
5	70209501	Damper and Hinge Exhaust Assembly	
6	70359801P	Blower Assembly	
7	56156	Nut	
8	70050401P	Idler Wheel Assembly	
9	70569501	Tensioning Bracket	
10	70543401	Spring Catch Bracket	
11	70508301	Screw	
12	70571801	Spring	
13	F430144	Screw	
14	70569603	Standoff	
15	70126104	Screw	
16	70202501	Drive Access Cover	
17	70017801	Exhaust Thimble	
18	70564201	Motor Mount Plate	
19	44087201	Nut	
20	70655101	Lever Arm and Belt Kit	
21	70521901	Motor Conduit Mounting Bracket	
22	44333202	Nut	
23	70559101	Motor Pulley	
24	70478601P	Drive Motor	.33 HP; 120, 230 Volt/1 Phase
	70485001P	Drive Motor	.33 HP; 380-460 Volt/3 Phase
25	70478701P	Fan Motor	.50 HP; 120, 230 Volt/1 Phase
	70484901P	Fan Motor	.50 HP; 380-460 Volt/3 Phase
26	70349601	Blower Motor Mounting Plate	
27	70334701	Double Ended Stud	
28	70493301	Lower Rear Assembly	
29	70488403	Spacer	
30	44087301	Nut	
31	70571901	Drive Plate	
32	70546301	Screw	
33	70653802	Lever Arm and Bushing Assembly	
34	70501301	Screw	

© Copyright, Alliance Laundry Systems LLC – DO NOT COPY or TRANSMIT

Blower and Exhaust Components

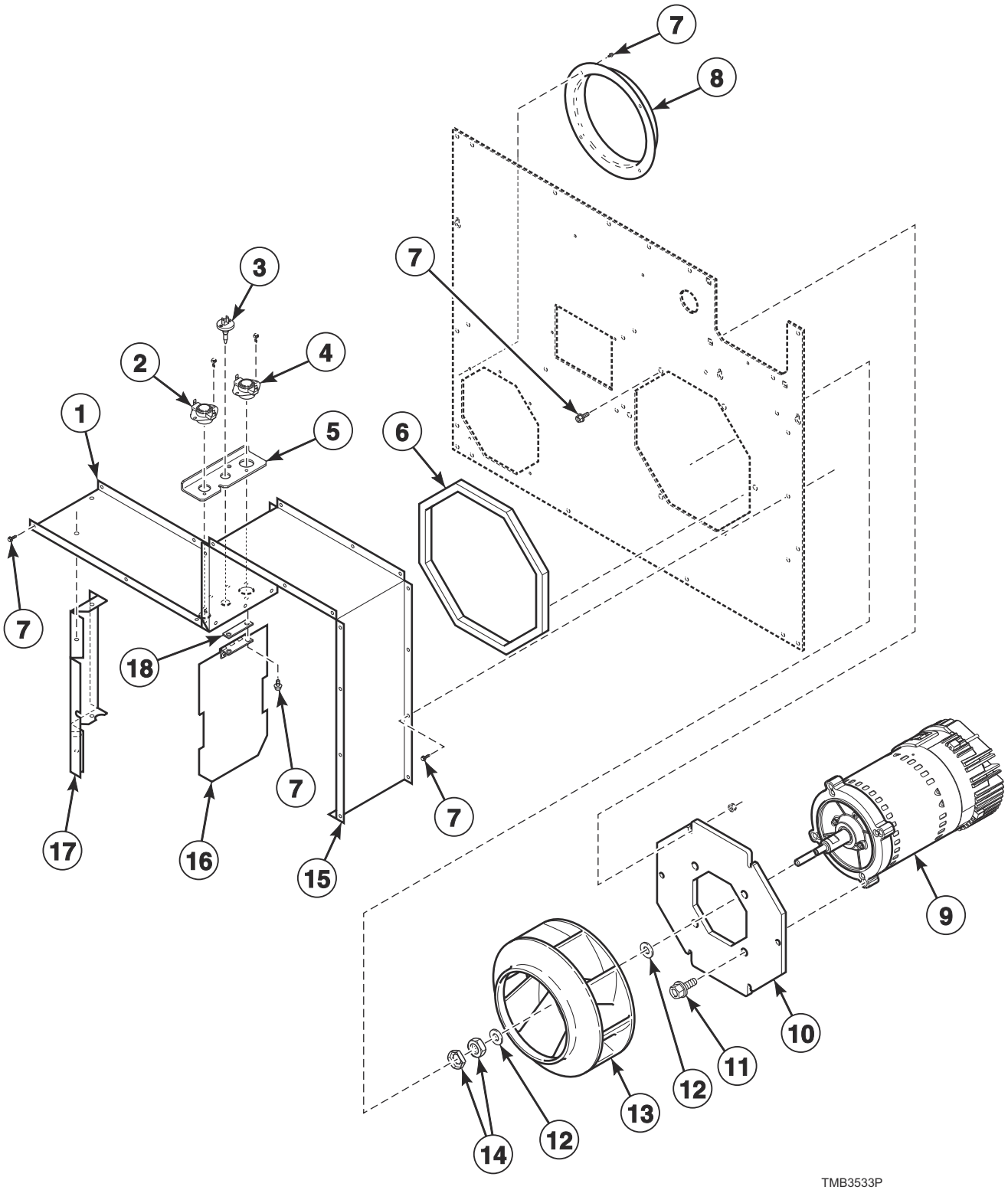

© Copyright, Alliance Laundry Systems LLC – DO NOT COPY or TRANSMIT

Blower and Exhaust Components

REF	PART NO.	DESCRIPTION	COMMENTS
	70144101	Key	Use with item 9
1	70554701	Blower Housing	Top
2	70530901	Limit Thermostat	Manual reset
3	M414704	Thermistor	
4	44328001	Limit Thermostat	Auto reset
5	70554901	Limit Access Bracket	
6	70392701P	Gasket	For blower housing opening
7	430497	Screw	
8	70014101	Blower Inlet Cone	
9	70478701P	Fan Motor	.50 HP; 120, 230 Volt/1 Phase
	70484901P	Fan Motor	.50 HP; 380-460 Volt/3 Phase
10	70349601	Blower Motor Mounting Plate	
11	70126101	Screw	
12	M400991	Washer	
13	70359801P	Blower Assembly	
14	M400022	Nut	
15	70215101	Blower Housing	
16	70209501	Damper and Hinge Exhaust Assembly	
17	70020301	Blower Housing	Left
18	70220901	Damper Spacer	

© Copyright, Alliance Laundry Systems LLC – DO NOT COPY or TRANSMIT

Airflow Switch

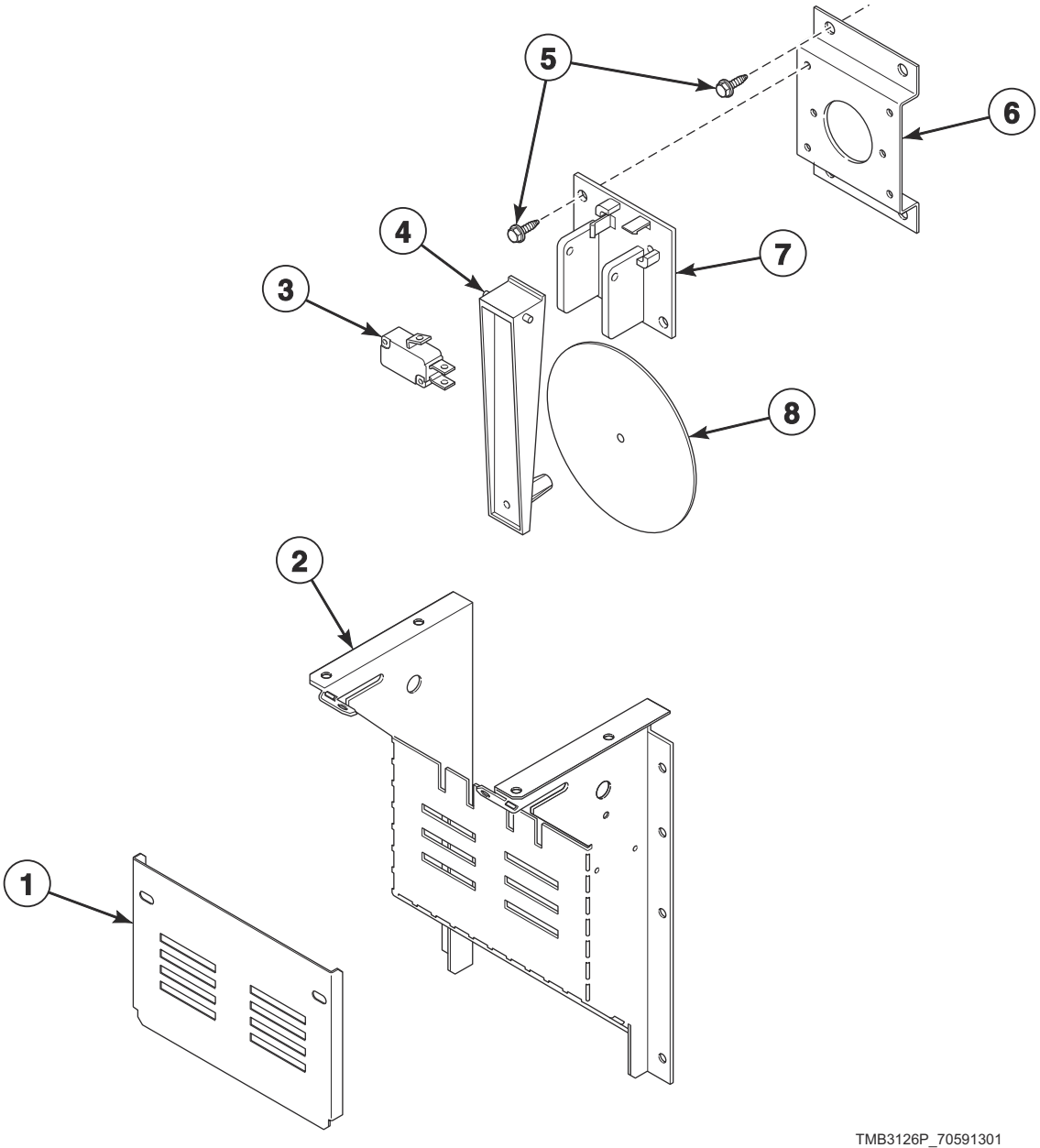

© Copyright, Alliance Laundry Systems LLC – DO NOT COPY or TRANSMIT

Airflow Switch

REF	PART NO.	DESCRIPTION	COMMENTS
1	70356601	Airflow Switch Cover	Non-moisture sensing
	70465701	Airflow Switch Cover	Moisture sensing
2	70356101	Airflow Switch Wrapper	
3	70411901	Switch	
4	70319401	Airflow Switch Arm	
5	430497	Screw	
6	70356301	Switch Bracket	
7	70319602	Airflow Switch and Arm Bracket	
8	70319201	Airflow Switch Vane	

© Copyright, Alliance Laundry Systems LLC – DO NOT COPY or TRANSMIT

Gas Heater Components

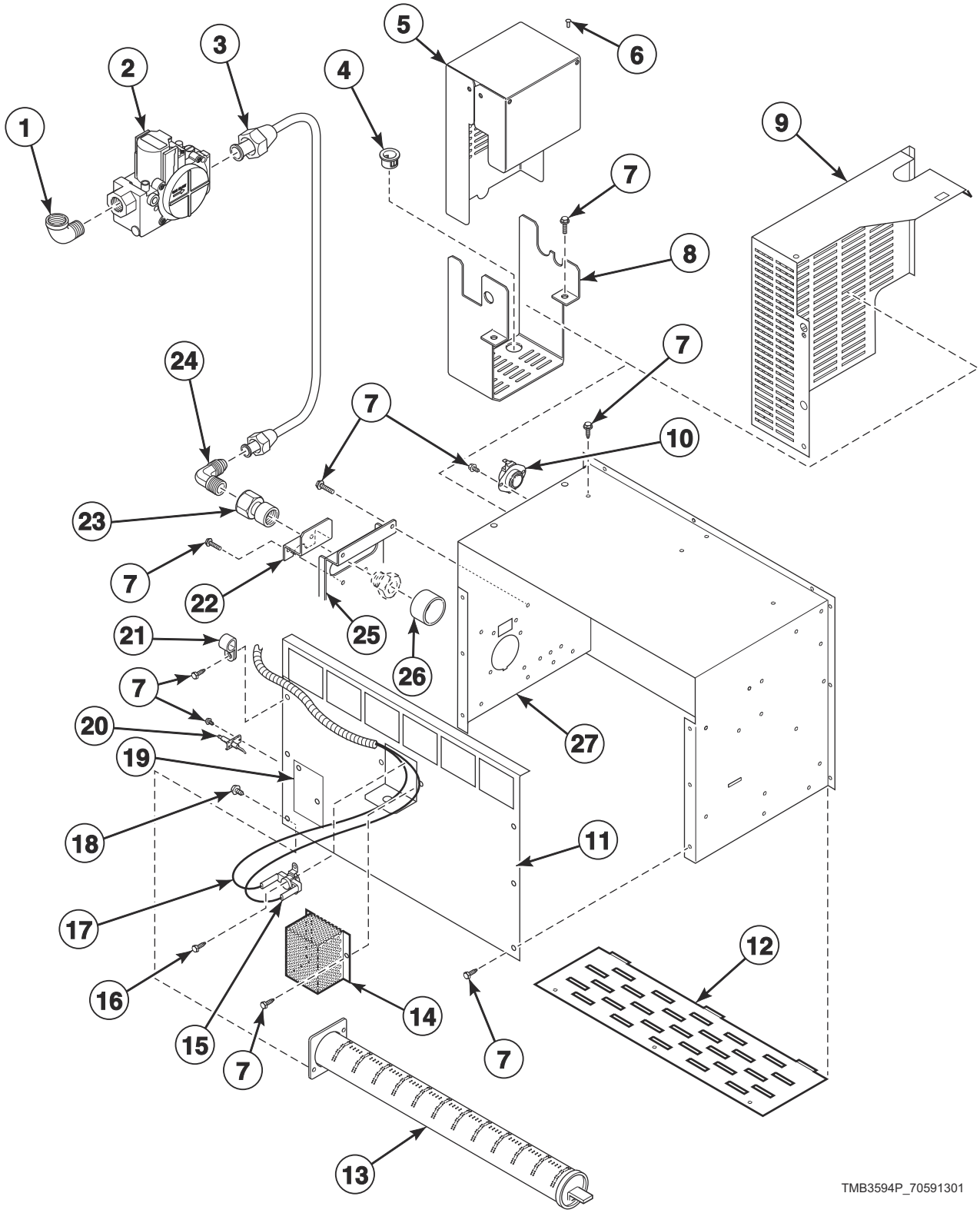

© Copyright, Alliance Laundry Systems LLC – DO NOT COPY or TRANSMIT

Gas Heater Components

REF	PART NO.	DESCRIPTION	COMMENTS
	44273501	Gas Valve Harness	
	70346801	Pipe Plug	
	44239702	High Voltage Suppression Cable	
	70550202	L.P. Conversion Kit	T and G market models; Natural Gas (N.G.); 0-2,000 feet
	70550214	L.P. Conversion Kit	Australian models; Natural Gas (N.G.); 0-2,000 feet
	70551902	L.P. Conversion Kit	IEC models; N.G.; 0-2,000 feet
	70609903	High Altitude Orifice Kit	T and G market N.G. models
	70609904	High Altitude Orifice Kit	T and G market Liquid Petroleum (L.P.) Gas models
	70131901	Adapter	IEC models; BPT/NPT
	70167601	Plug	IEC models
	70535901	Notice Label	Australian models; N.G.
	70544901	Notice Label	Australian models; (L.P.) Gas
1	H86070034	Street Elbow	T and G market models
	F422304	Street Elbow	All other models
2	44154503	N.G. Valve	T and G market models
	44154504	L.P. Valve	T and G market models
	44154507	Gas Valve	IEC models; N.G.; 1/2 NPT
	44154508	Gas Valve	IEC models; L.P.; 1/2 NPT
3	70271201	Gas Line Assembly	
4	M400770	Snap Bushing	
5	70429901	Gas Valve Cover	
6	M405750	Pop Rivet	4 required
7	430497	Screw	10 required
8	70504101	Gas Valve Bracket	
9	70429901	Gas Valve Cover	IEC models
10	44328004	Limit Thermostat	Side
11	70371501	Stove Back	
12	70188801	Burner Grill	
13	70229801P	Gas Burner	
	70546701	Anti-Rattle Burner Assembly	Includes 70229801P Gas Burner, 431318 Control Door Latch and M400003 Pop Rivet
14	M414477	Thermostat Cover	
15	44328104	Limit Thermostat	Rear
16	M405188	Screw	2 required
17	70564301	Stove Limit Harness	
18	05161	Screw	
19	70159601	Igniter Cover	
20	70548701P	Spark Electrode	
21	70203701	Pipe Clip	
22	70539901	Ignition Keeper Orifice Bracket	
23	70379301	Orifice Adapter	
24	70208701	Elbow	2 required
25	70248901	Orifice Holder Bracket	
26	70239801	Primary Air Adjustment Sleeve	L.P. models
27	70333401	Stove Top and Sides	

© Copyright, Alliance Laundry Systems LLC – DO NOT COPY or TRANSMIT

Burner Orifices

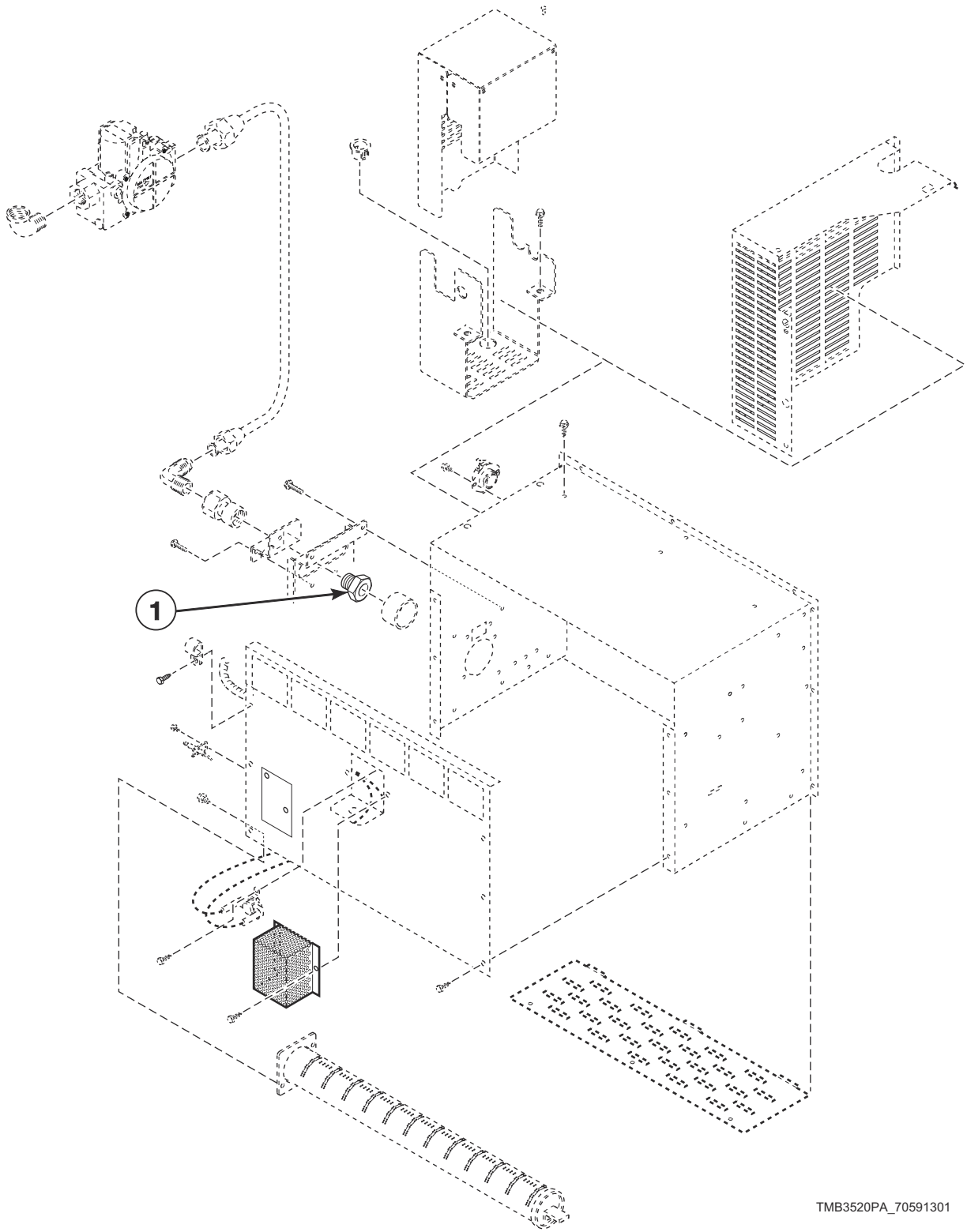

© Copyright, Alliance Laundry Systems LLC – DO NOT COPY or TRANSMIT

Burner Orifices

REF	PART NO.	DESCRIPTION	COMMENTS
1	70684142	Burner Orifice	Classic models; Natural Gas (N.G.); Drill no. 20 (4.09 mm); 0-2,000 feet
	70684139	Burner Orifice	Classic models; N.G.; Drill no. 23 (3.91 mm); 2,001-4,000 feet
	70684137	Burner Orifice	Classic models; N.G.; Drill no. 25 (3.80 mm); 4,001-6,000 feet
	70684135	Burner Orifice	Classic models; N.G.; Drill no. 27 (3.66 mm); 6,001-8,000 feet
	70684133	Burner Orifice	Classic models; N.G.; 3.50 mm; 8,001-10,000 feet
	70684116	Burner Orifice	Classic models with 2nd digit A, G, H, J, K, L and T; Liquid Petroleum Gas (L.P.); Drill no. 40 (2.49 mm); 0-2,000 feet
	70684114	Burner Orifice	Classic models with 2nd digit A, G, H, J, K, L and T; L.P.; Drill no. 42 (2.37 mm); 2,001-4,000 feet
	70684113	Burner Orifice	Classic models with 2nd digit A, G, H, J, K, L and T; L.P.; 2.30 mm; 4,001-6,000 feet
	70684111	Burner Orifice	Classic models with 2nd digit A, G, H, J, K, L and T; L.P.; 2.20 mm; 6,001-8,000 feet
	70684109	Burner Orifice	Classic models with 2nd digit A, G, H, J, K, L and T; L.P.; Drill no. 45 (2.08 mm); 8,001-10,000 feet
	70684110	Burner Orifice	CE classic models; L.P.; Drill no. 44 (2.18 mm); 0-2,000 feet
	70684109	Burner Orifice	CE classic models; L.P.; Drill no. 45 (2.08 mm); 2,001-4,000 feet
	70684107	Burner Orifice	CE classic models; L.P.; Drill no. 47 (1.99 mm); 4,001-6,000 feet
	70684106	Burner Orifice	CE classic models; L.P.; Drill no. 48 (1.93 mm); 6,001-8,000 feet
	70684105	Burner Orifice	CE classic models; L.P.; Drill no. 49 (1.85 mm); 8,001-10,000 feet
	70684111	Burner Orifice	Classic J market models; L.P.; 2.20 mm; 0-2,000 feet
	70684109	Burner Orifice	Classic J market models; L.P.; Drill no. 45 (2.08 mm); 2,001-4,000 feet
	70684108	Burner Orifice	Classic J market models; L.P.; Drill no. 46 (2.06 mm); 4,001-6,000 feet
	70684106	Burner Orifice	Classic J market models; L.P.; Drill no. 48 (1.93 mm); 6,001-8,000 feet
	70684105	Burner Orifice	Classic J market models; L.P.; Drill no. 49 (1.85 mm); 8,001-10,000 feet
	70684134	Burner Orifice	Eco models; N.G.; Drill no. 28 (3.57 mm); 0-2,000 feet
	70684131	Burner Orifice	Eco models; N.G.; 3.40 mm; 2,001-4,000 feet
	70684130	Burner Orifice	Eco models; N.G.; 3.30 mm; 4,001-6,000 feet
	70684128	Burner Orifice	Eco models; N.G.; Drill no. 1/8 (3.18 mm); 6,001-8,000 feet
	70684126	Burner Orifice	Eco models; N.G.; Drill no. 31 (3.05 mm); 8,001-10,000 feet

© Copyright, Alliance Laundry Systems LLC – DO NOT COPY or TRANSMIT

Electric Heater Components

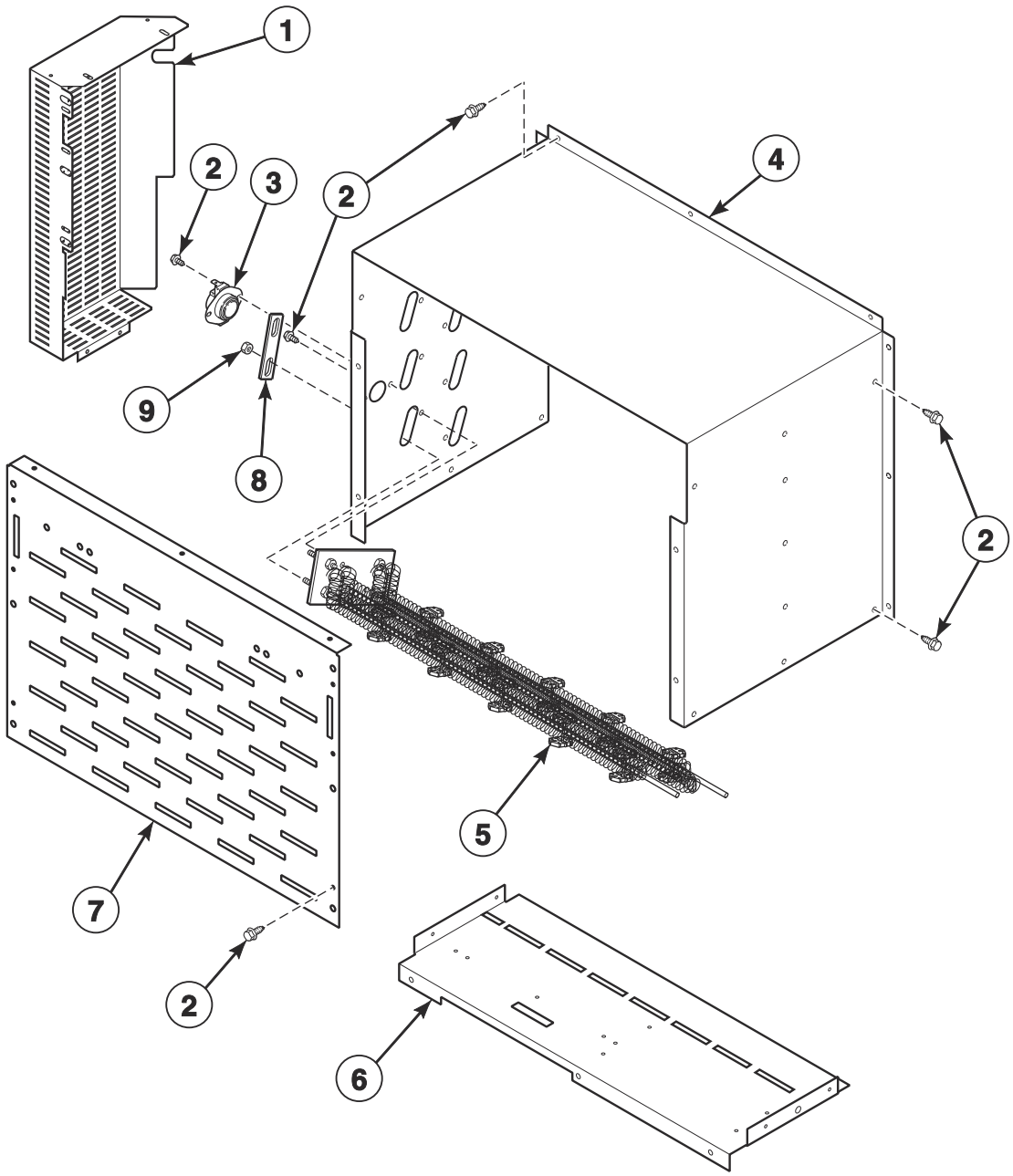

TMB3521P_70591301

© Copyright, Alliance Laundry Systems LLC – DO NOT COPY or TRANSMIT

Electric Heater Components

REF	PART NO.	DESCRIPTION	COMMENTS
	70564303	Stove Limit Harness	
	44281709	Jumper Harness	Use with 440-480 Volt
	44295412	Jumper Harness	Use with 380-415 Volt; 4 required
1	70365201	Stove Connectors Cover	
2	430497	Screw	
3	44328006	Limit Thermostat	
4	70525601	Stove Top and Sides	
5	70034401P	Heater Element	Classic models; 3 required; 7 kW; 208 Volt heater element for 200-208 Volt/1 or 3 Phase
	70034402P	Heater Element	Classic models; 3 required; 7 kW; 220 Volt heater element for 380 and 440 Volt/3 Phase
	70034403P	Heater Element	Classic models; 3 required; 7 kW; 240 Volt heater element for 230-240 Volt/1 or 3 Phase and 400-415 and 460-480 Volt/3 Phase
	70034415P	Heater Element	Eco models; 3 required; 4 kW; 208 Volt heater element for 200-208 Volt/3 Phase
	70034414P	Heater Element	Eco models; 3 required; 4 kW; 220 Volt heater element for 380 and 440 Volt/3 Phase
	70034416P	Heater Element	Eco models; 3 required; 4 kW; 240 Volt heater element for 400-415 Volt/50 Hertz or 240 and 460-480 Volt/60 Hertz
6	70357201	Stove Partition	
7	70214901	Stove Grill	
8	70066501	Jumper Bar	2 required for 440-480 Volt
	M400869	Jumper Strip	3 required for 380-415 and 440-480 Volt; 6 required for 200-240 Volt
9	70054	Nut	

© Copyright, Alliance Laundry Systems LLC – DO NOT COPY or TRANSMIT

Steam Heater Components

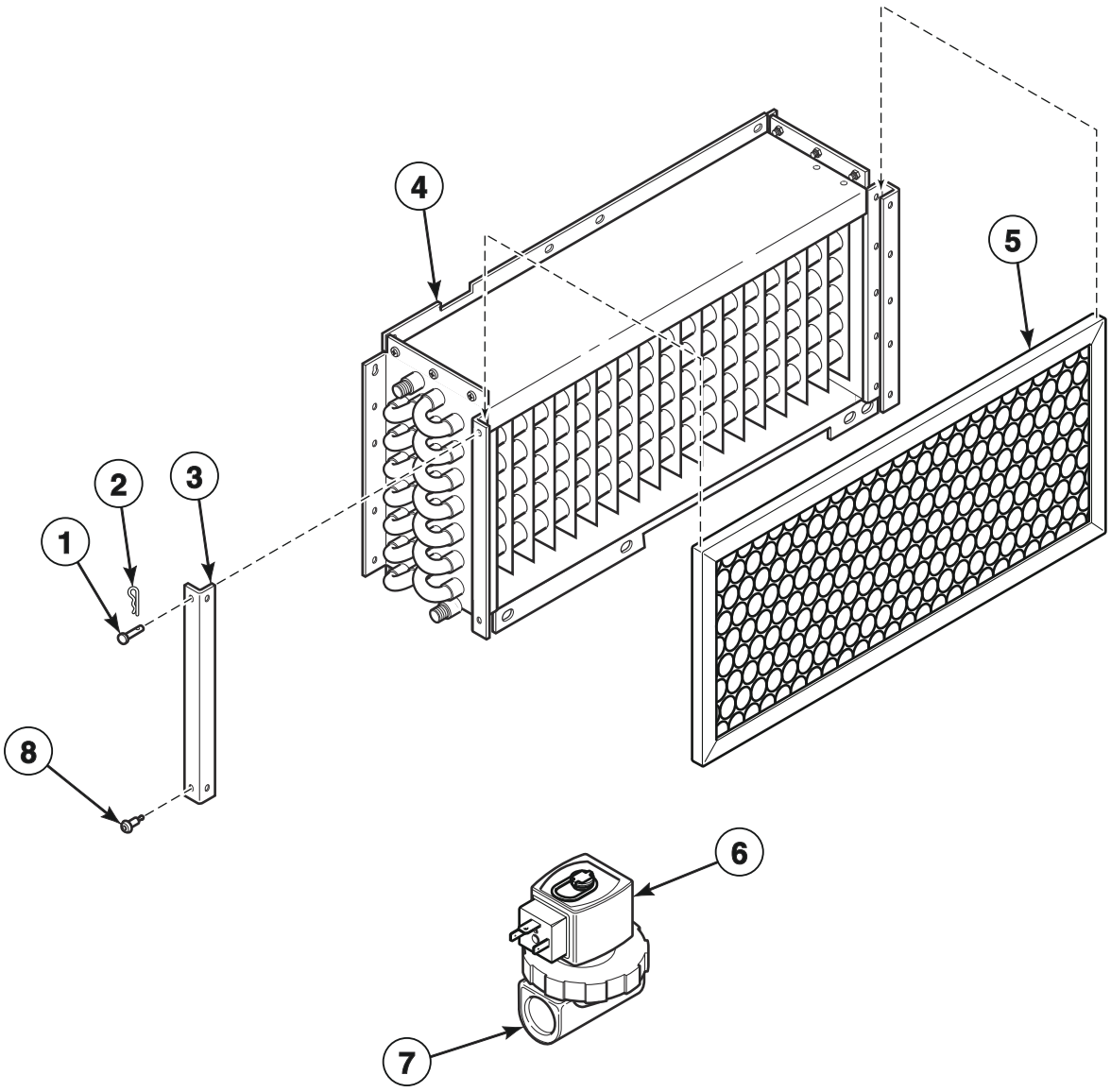

TMB3522P_70591301

© Copyright, Alliance Laundry Systems LLC – DO NOT COPY or TRANSMIT

Steam Heater Components

REF	PART NO.	DESCRIPTION	COMMENTS
	F8382301	DIN Valve Adapter Kit	Use with item 7
	70564302	Stove Limit Bypass Harness	
	F8520703	Steam Valve Harness	
	44304801	Strain Relief	
	70529601	Steam Adapter Kit	IEC models
1	70389201	Clevis Pin	
2	70389301	Hairpin Cotter	
3	70369301	Steam Filter Holder	
4	70369101P	Steam Coil	4 rows
5	70429401	Filter	IEC models
	70036001	Air Filter	CSA models
6	F8514701	Coil	120 Volt
	F8514601P	Coil	240 Volt
7	F8322904P	Steam Valve	120 Volt
	F8322906P	Valve	240 Volt
8	70058501	Pop Rivet	

© Copyright, Alliance Laundry Systems LLC – DO NOT COPY or TRANSMIT

Control Tray

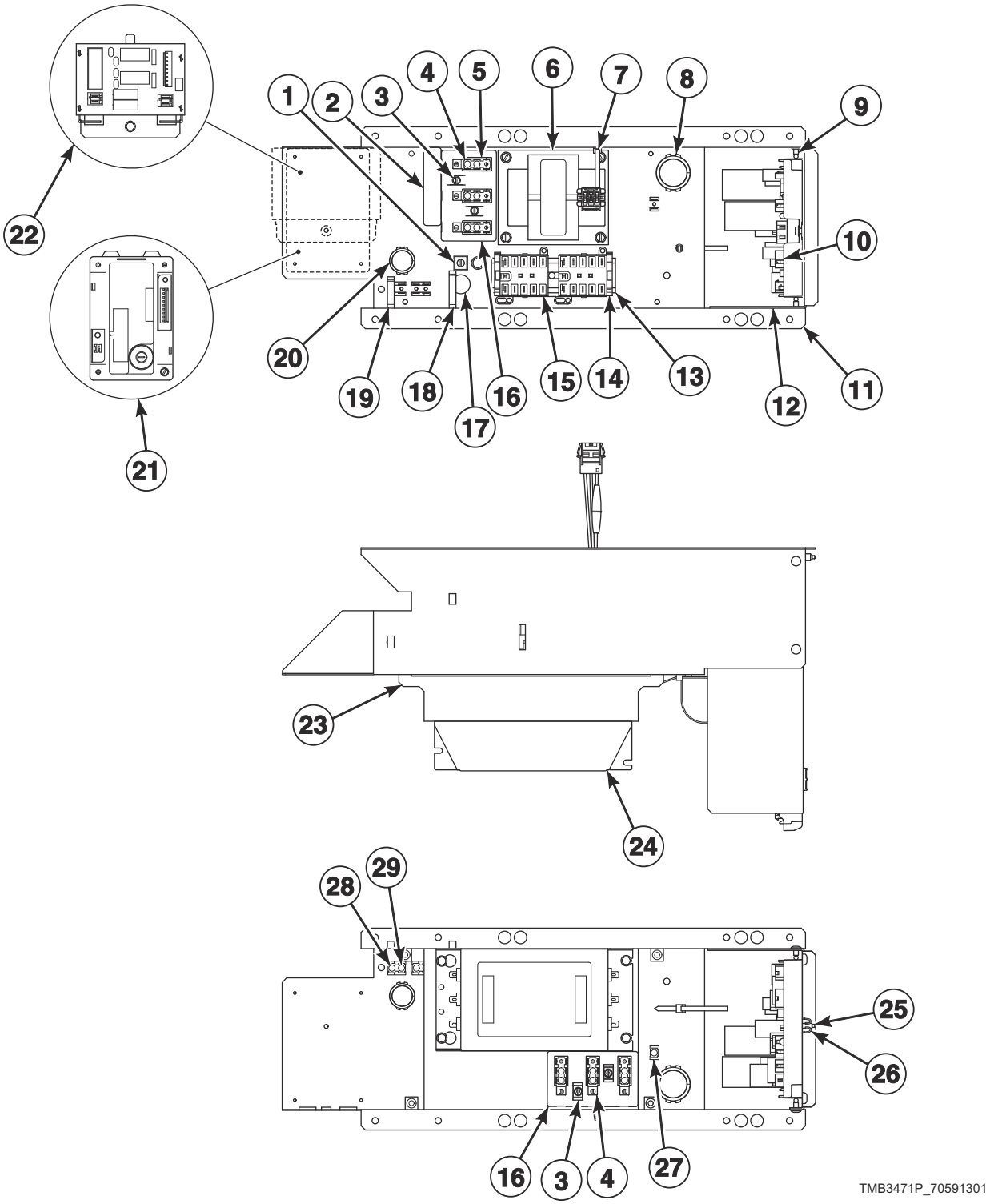

© Copyright, Alliance Laundry Systems LLC – DO NOT COPY or TRANSMIT

Control Tray

REF	PART NO.	DESCRIPTION	COMMENTS
	685837	Screw	Use with item 1
	44088001	Nut	Use with item 1
	70507501	Control Tray Cover	
	70559301	Conversion Kit	X to B voltage
	44357401	EMI Filter Kit	North America models; 100-240 Volt
	44357402	EMI Filter Kit	North America models; 380-480 Volt
1	M411283	Ground Lug Connector	
2	44286803	Label	L1, L2, L3
	44286801	Label	L1, N
	44286802	Wire Label	L1 L2, L1 N
	44286804	Wire Label	L1 L2, L1 N, L1 L2 L3
3	51783	Screw	
4	430642	Terminal Block	
5	70333001	Terminal Block Shield	
6	F8491101	Transformer	380-480 Volt
7	70335601	Cable Tie	
8	70346501	Bushing	
9	70058501	Pop Rivet	
10	70671701	I/O Control Assembly	
11	70492401	Control Tray	
12	70494901	Control Board Control Tray	
13	M412690	DIN Rail	
14	F8449801	End Stop	
15	70482601	Contactor	240 Volt or less: 1 required; 380 Volt or higher: 2 required
16	M413862	Insulator	
17	D516100	Label	
18	F8449501	Wire Clip	
19	F8449502	Wire Clip	
20	70178701	Snap Bushing	
21	70482002P	Ignition Control	IEC gas models
	70482001	Ignition Control	North America gas models
22	70501801	Steam Control Assembly	Steam models
23	70533101	Filter Bracket	
24	F8591601	EMI Filter	IEC models; 100-200 and 200-240 Volt/1 Phase
	F8637501	EMI Filter	IEC models; 380-480 Volt
25	F8206901	Screw	
26	70030501	Expansion Clip	
27	00621SG	Male Tab Terminal	
28	M400003	Pop Rivet	
29	00622SG	Terminal	

© Copyright, Alliance Laundry Systems LLC – DO NOT COPY or TRANSMIT

Accessory Box - Electric 200-240 Volt Models

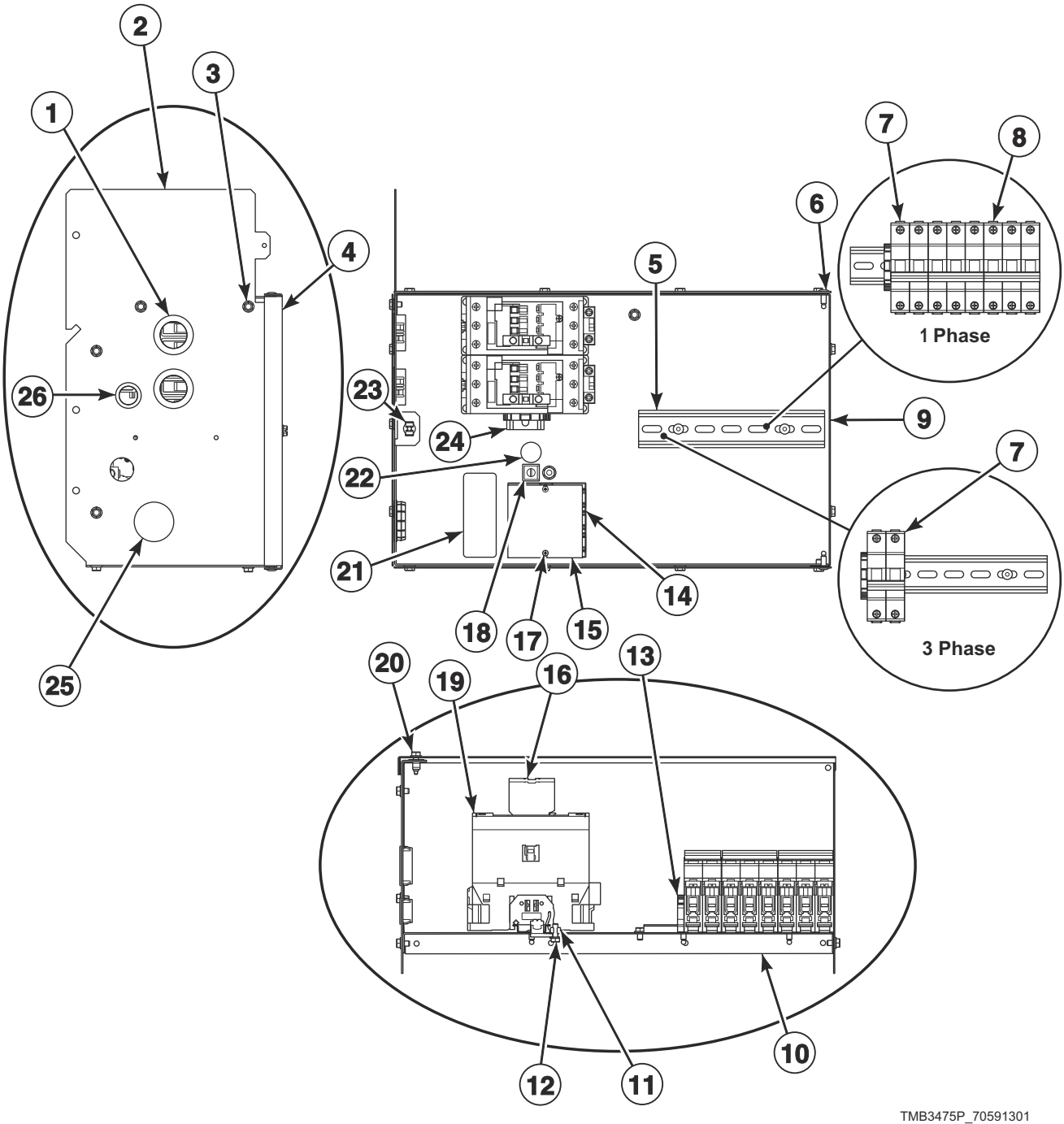

© Copyright, Alliance Laundry Systems LLC – DO NOT COPY or TRANSMIT

Accessory Box - Electric 200-240 Volt Models

REF	PART NO.	DESCRIPTION	COMMENTS
	F8611600	Warning Label Kit	IEC models
	F8611601	Warning Label	
	44334307	Contactor Coil Harness	
	44309001	Harness	North America models; Power distribution block to control circuit breaker
	44309011	Harness	IEC models; Power distribution block to control circuit breaker
	70516106	Harness	Contactor to element
	70516105	Harness	Contactor to element
	70516103	Harness	1 Phase; Power distribution block to circuit breaker/contactor
	70516104	Harness	Power distribution block to circuit breaker/contactor
	70516101	Harness	Power distribution block to circuit breaker/contactor
	70516102	Harness	1 Phase; Power distribution block to circuit breaker/contactor
	44334301	Control Harness	1 Phase
	44334302	Control Harness	3 Phase
1	M402542	Snap Bushing	2 required
2	70540601	Accessory Box Side	Left
3	51780	Screw	
4	70358401	Accessory Box Cover	
5	F8134001	DIN Rail	
6	70058502	Pop Rivet	
7	70488102	Circuit Breaker	25 amp
8	70488104	Circuit Breaker	2 required; 50 amp; 200-208 and 230-240 Volt/1 Phase
9	70540701	Accessory Box Side	Right
10	70540501	Accessory Box Back	
11	44088001	Nut	
12	685837	Screw	
13	F8449801	End Stop	2 required
14	M413865	Power Distribution Block	
15	44014901P	Power Distribution Block Cover	
16	44313201	Auxiliary Contact Block	2 required
17	39733	Screw	
18	M411283	Ground Lug Connector	
19	70482801	Contactor	2 required
20	F8206901	Screw	
21	44286802	Wire Label	1 Phase
	44286803	Label	3 Phase
22	D516100	Label	
23	70030501	Expansion Clip	
24	M412690	DIN Rail	
25	70180001	Plug	
26	M400770	Snap Bushing	

© Copyright, Alliance Laundry Systems LLC – DO NOT COPY or TRANSMIT

Accessory Box - Electric 380-480 Volt Models

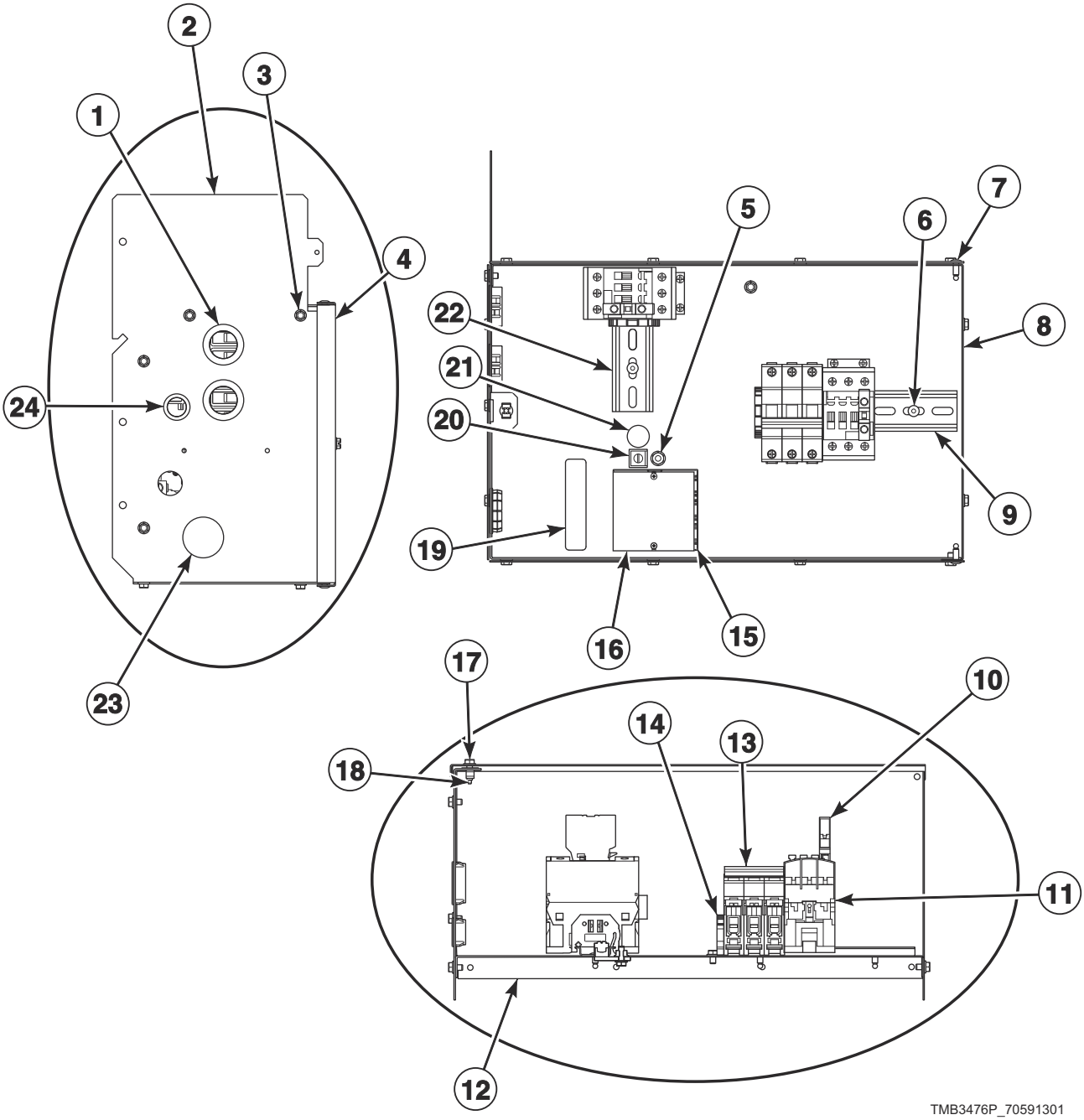

© Copyright, Alliance Laundry Systems LLC – DO NOT COPY or TRANSMIT

Accessory Box - Electric 380-480 Volt Models

REF	PART NO.	DESCRIPTION	COMMENTS
	F8611600	Warning Label Kit	IEC models
	F8611601	Warning Label	
	44334307	Contactor Coil Harness	
	44309002	Harness	North America models; Power distribution block to control circuit breaker
	44309012	Harness	IEC models; Power distribution block to control circuit breaker
	70516106	Harness	Contactor to element
	70516103	Harness	2 required; Power distribution block to circuit breaker/contactor
1	M402542	Snap Bushing	2 required
2	70540601	Accessory Box Side	Left
3	51780	Screw	
4	70358401	Accessory Box Cover	
5	685837	Screw	
	44088001	Nut	
6	70058501	Pop Rivet	
7	70058502	Pop Rivet	
8	70540701	Accessory Box Side	Right
9	F8134001	DIN Rail	
10	44313201	Auxiliary Contact Block	2 required
11	70482701	Contactor	2 required
12	70540501	Accessory Box Back	
13	70488101	Circuit Breaker	25 amp
14	F8449801	End Stop	2 required
15	M413865	Power Distribution Block	
16	44014901P	Power Distribution Block Cover	
17	F8206901	Screw	
18	70030501	Expansion Clip	
19	44286803	Label	
20	M411283	Ground Lug Connector	
21	D516100	Label	
22	M412690	DIN Rail	
23	70180001	Plug	
24	M400770	Snap Bushing	

© Copyright, Alliance Laundry Systems LLC – DO NOT COPY or TRANSMIT

Harnesses

PART NO.	DESCRIPTION	COMMENTS
44316007	Harness	IEC models; 1 Phase; Auxiliary power distribution block to filter harness
44316008	Harness	IEC models; 3 Phase; Auxiliary power distribution block to filter harness
44280007	Configuration Harness	100-120 Volt; Cylinder
44280006	Configuration Harness	100-120 Volt; Fan
44356402	Control Tray Harness Assembly	Electric models
44356401	Control Tray Harness Assembly	Gas models
44356407	Control Tray Harness Assembly	Steam models
44334702	Inverter Contactor Coil Harness	Secondary; 380-480 Volt
44316001	Harness	IEC models; 1 Phase; Main power distribution block to EMI filter harness
44316002	Harness	IEC models; 3 Phase; Main power distribution block to EMI filter harness
44280005	Configuration Harness	3 Phase
44280010	Motor Contactor Power Harness	IEC models; 1 Phase
44280012	Motor Contactor Power Harness	IEC models; 3 Phase
44280001	Motor Contactor Power Harness	North America models; 1 Phase
44280003	Motor Contactor Power Harness	North America models; 3 Phase
44280101	Power Harness	Control and emergency stop connection; 380-480 Volt
44272101	Power Harness	Control and emergency stop connection; 100-120 and 200-240 Volt
204454	Ferrite	Korean models; EMI; Motor circuit, inverter communication circuit
44335301	Inverter Motor Harness	Cylinder
44335302	Inverter Motor Harness	Fan
70608601	EMC Shield	Gas and steam Korean models

© Copyright, Alliance Laundry Systems LLC – DO NOT COPY or TRANSMIT

Labels

PART NO.	DESCRIPTION	COMMENTS
44324201	Caution Label	Australian models; Repeat Ignition Reset
70535101	Caution Label	Vent/install
F8614501	Danger Label	Shock; English/French
F8614301	Hot Surface Warning Label	English/French
F8609001	Hot Surface Warning Label	Icon
F8611601	Warning Label	
70535100	Label Kit	Vent/install
F8614500	Label Kit	Shock
70539601	Notice Label	
F8609501	Notice Label	
D516073	Notice Label	Read instructions; Icon
70538401	Pinch Warning Label	English/French
F8615701	Pinch Warning Label	Icon
F8614201	Shock Warning Label	Icon
70536301	Warning Label	Lint; Australian models
44324101	Warning Label	Fire; Australian models
70534305	Warning Label	Fire; Colombian Spanish; Australian models
44321601	Warning Label	Risk of fire; Icon

© Copyright, Alliance Laundry Systems LLC – DO NOT COPY or TRANSMIT

Notes

© Copyright, Alliance Laundry Systems LLC – DO NOT COPY or TRANSMIT

Parts Index

A

Accessory Box Back
70540501 ..... 87, 89
Accessory Box Cover
70358401 ..... 87, 89
Accessory Box Side
70540601 ..... 87, 89
70540701 ..... 87, 89
Adapter
70131901 77
Air Filter
70036001 83
Airflow Switch and Arm Bracket
70319602 75
Airflow Switch Arm
70319401 75
Airflow Switch Cover
70356601 75
70465701 75
Airflow Switch Vane
70319201 75
Airflow Switch Wrapper
70356101 75
Anti-Rattle Burner Assembly
70546701 77
App Pay Overlay Kit
44374701 ..... 17, 19
Auxiliary Contact Block
44313201 ..... 87, 89

B

Blower Assembly
70359801P 71, 73
Blower Housing
70020301 73
70215101 ..... 71, 73
70554701 ..... 71, 73
Blower Housing Scroll
70016301 71
Blower Inlet Cone
70014101 73
Blower Motor Mounting Plate
70349601 ..... 71, 73
Bracket
70634201 49
Burner Grill
70188801 77
Burner Orifice
70684105 79
70684106 79
70684107 79
70684108 79
70684109 79
70684110 79
70684111 79
70684113 79
70684114 79
70684116 79
70684126 79
70684128 79
70684130 79
70684131 79
70684133 79
70684134 79
70684135 79
70684137 79
70684139 79
70684142 79
Bushing
70346501 ..... 65, 85
Bypass Harness
44334103 51

C

Cable Tie
70335601 85
Caution Label
44324201 91
70535101 91
Center Cylinder Seal
70066004 63
Center Hinge Lug Assembly
70640402 39
Center Pan
70565201 65
Center Partition
70252601 65
Central Pay Board Harness
44355604 31
Central Pay Harness
44342801 17
44355601 31
44355605 31
Central Pay Kit
70612701 31
70612703 31
Circuit Breaker
70488101 89
70488102 87
70488105 87
Clevis Pin
70389201 83
Clip Keeper Bracket
70604901 49
Clip Mount Bracket
70604801 49
Coil
F8514601P 83
F8514701 83
Coin Box
F160673P 51
Coin Chute Assembly
70296401 51
Coin Drop
38963P 27
70441601 27
70441603 27

N/A items do not appear in index.

© Copyright, Alliance Laundry Systems LLC – DO NOT COPY or TRANSMIT

Coin Drop Assembly
201141 ... 27
210195 ... 27
210196 ... 27
38462P ... 27
38463 ... 27
38464P ... 27
38467 ... 27
38475 ... 27
38519 ... 27
70281102 ... 27
70283102 ... 27
70441602 ... 27
70447301 ... 27
70471601 ... 27
70482401 ... 27
70506901 ... 27
Coin Drop Kit
CK077 ... 27
CK097 ... 27
CK122 ... 29
Coin Identification Paper
38725 ... 27
Coin Meter
F0160737-00 ... 27
Coin Vault and Emergency Stop Mount Assembly
70529502 ... 51
Coin Vault Assembly
70529501 ... 51
Coin Vault Switch Harness
44334101 ... 51
Cold Weather Kit
44340301 ... 69
Configuration Harness
44280005 ... 90
44280006 ... 90
44280007 ... 90
Contact Base
F8538101 ... 53
Contact Switch
F8069501 ... 53
Contactor
70482601 ... 85
70482701 ... 89
70482801 ... 87
Contactor Coil Harness
44334307 ... 87, 89
Control
70511601 ... 69
Control Assembly
70478803P ... 17, 19
70478804 ... 23
70478903 ... 19
70478904 ... 23
70479801 ... 15
70479901 ... 15
70523003 ... 19
70523004 ... 23
70523101 ... 15
70543104 ... 25
70634703 ... 45
70634706W ... 45
70639401 ... 45
70639402 ... 45
70639403W ... 45
70639404W ... 45
70684203 ... 45
70684301 ... 45
70684302 ... 45
70684303W ... 45
Control Board Control Tray
70494901 ... 85
Control Box Base
44065301 ... 69
Control Box Cover
44065201 ... 69
Control Box Housing
44306701 ... 69
Control Box Top
44307101 ... 69
Control Door and Studs Assembly
70570201 ... 25
Control Door Latch
431318 ... 43
Control Harness
44334301 ... 87
44334302 ... 87
44334404 ... 69
Control Panel
70121501* ... 43
70121505* ... 43
70121507W ... 43
70121508 ... 43
70121509 ... 43
70121514DG ... 43
70121514W ... 43
70273308B ... 43
70273313 ... 43
70273315LG ... 43
70273315W ... 43
Control Panel Stand Bracket
70641501 ... 49
Control Panel Switch Bracket
70641601 ... 45
Control Plate
70497101 ... 15, 23
Control Plate and Studs Assembly
70496601 ... 17, 19
Control Plate Assembly
70497201 ... 17, 19
Control Tray
70492401 ... 85
Control Tray Cover
70507501 ... 85
Control Tray Harness Assembly
44356401 ... 90
44356402 ... 90
44356407 ... 90
Control Trim
44016401 ... 51
70529401 ... 51
Conversion Kit
70559301 ... 85
Cylinder and Trunnion Assembly
70443801 ... 59
70443802 ... 59
Cylinder Assembly
70372701P ... 59
70372702P ... 59
Cylinder Bearing Stud Plate Assembly
430352 ... 63

N/A items do not appear in index.

© Copyright, Alliance Laundry Systems LLC – DO NOT COPY or TRANSMIT

Cylinder Guide Tool
263P4 63
Cylinder Rib Assembly
70327101 59
70327102 59
70433001 59
Cylinder Shroud
70347201 65
70347202 65
70432303 65
70432304 65

D

Damper and Hinge Exhaust Assembly
70209501 ..... 71, 73
Damper Spacer
70220901 73
Danger Label
F8614501 91
DIN Rail
F8134001 ..... 87, 89
M412690 ..... 85, 87, 89
DIN Valve Adapter Kit
F8382301 83
Door Assembly
44058005P 33
44058006 33
44058007P 33
44058008 33
44287801BP 33
44287801LGP 33
70212300 33
70212301P 33
70212302P 33
70496501P 33
70496502P 33
70597701 33
70597702 33
70597703 33
70597704 33
70597705 33
70597706 33
70597707 33
70597708 33
70597709 33
Door Catch Assembly
D510177 57
Door Catch Kit
70482901 51
Door Glass
M400784P 35
70133601P 35
70133602 35
70133604 35
Door Glass Installation Tool
M4221P4 35
Door Glass Label
70650401 35
70707701 35
Door Glass Seal Kit
70211901P 35
Door Handle
44007902P 35
44263801 35
44370602 35
70521101 35
Door Handle Wedge
D510129W 57
Door Hinge
70116003* 37
70116005B 37
70116005LG 37
70116006 37
70632701LG 39
70632701W 39
70632703 39
70632707 39
70632709B 39
70632711 39
Door Hinge Lug Assembly
44035001 ..... 37, 57
44035002 37
Door Latch
M401223 51
Door Pull and WEdge Kit
D511213P 57
Door Pull and Wedge Kit
D510103*P 57
Door Ring and Handle Assembly
70543907B 35
70543907LG 35
Door Ring Assembly
70543901 35
70543902 35
70543904B 35
70543905 35
70543906 35
70597507B 35
Door Ring Gasket
70296801 35
Door Strike
D510181 57
Door Switch Actuator
70532105 37
70727901 37
Double Ended Stud
70334701 71
Drive Access Cover
70202501 71
Drive Motor
70478601P 71
70485001P 71
Drive Plate
70571901 71
Drive Rivet
M400713 69
Drywall Screw Magnet Kit
70343101P 59, 63

E

Elbow
70208701 77
70428101 67
Electronic Coin Drop Assembly
70294107 27
70513302 27
70513303 27

N/A items do not appear in index.

© Copyright, Alliance Laundry Systems LLC – DO NOT COPY or TRANSMIT

70513304 27
70513306 27
70513309 27
70513310 27
70513311 27
70513312 27
70513313 27
70513314 27
70513315 27
70513316 27
70513318 27

Electronic Coin Drop Kit
CK099 29
CK100 29
CK101 29
CK109 29
CK110 29
CK113 29
CK115 29
CK116 29
CK117 29
CK118 29
CK119 29
CK120 29
CK121 29
CK125 29

EMC Shield
70608601 90

Emergency Stop Button Kit
70580301 53

Emergency Stop Bypass Harness
F8519403 53

Emergency Stop Harness
44272401 53

Emergency Stop Label
44012901 53
44012903 53

Emergency Stop Mounting Bracket
70550401 53

Emergency Stop Pushbutton
F200233500 53

EMI Filter
F8591601 85
F8637501 85

EMI Filter Kit
44357401 85
44357402 85

End Cap
70070101 59
70070102 59

End Stop
F8449801 ..... 85, 87, 89

Ethernet Gateway Kit
NK320 31

Exhaust Thimble
70017801 71

Expansion Clip
70030501 ..... 17, 19, 31, 51, 85, 87, 89

F

False Front
70000501*P 41
70000503DG 41
70000503LG 41
70000504 41
70024203DG 41
70024203LG 41
70024204 41

False Front Assembly
70024201*P 41

Fan Motor
70478701P 71, 73
70484901P 71, 73

FCC-IC Label
F8613201 31

Ferrite
204454 90

Fill Hose
202799 69
202800 69

Filter
70429401 83

Filter Bracket
70533101 85

Filter Mounting Plate
70551701 69

Flat Topl
70557601 65

Fob Communication Harness
F8719301 19

Fob Reader Control Assembly
205135 19

Fob Reader Kit
70666806 31

Front Panel
70524106 47
70524115DG 47
70524115LG 47
70601701 47
70602001* 47
70602301* 47
70602801LG 47

Front Panel Assembly
44115902 47
70576002DG 47
70601501 47
70601601 47
706019017 47
70602002W 47
70602102W 47
70602202W 47
70602302W 47
70602501DG 47
70602801DG 47
70705201 49
70705201W 49
70705202 49
70705202W 49
70705203 49
70705203LG 49
70705203W 49
70705204 49
70705204W 49
70705205 49
70705205W 49

Front Panel Assmbly
70602702W 47

Front Panel Seal
70173401P 47, 49

N/A items do not appear in index.

© Copyright, Alliance Laundry Systems LLC – DO NOT COPY or TRANSMIT

G

Gas Burner
70229801P 77
Gas Line Assembly
70271201 77
Gas Valve
44154507 77
44154508 77
Gas Valve Bracket
70504101 77
Gas Valve Cover
70429901 77
Gas Valve Harness
44273501 77
Gasket
70247601 57
70289101P 49, 55
70392701P 73
Ground Lug Connector
M411283 ..... 85, 87, 89

H

Hairpin Cotter
70389301 83
Handle and Caps Assembly
70154401 55
70154413 55
Handle Bumper
70407207 55
Harness
F8617901 25
44309001 87
44309002 89
44309011 87
44309012 89
44316001 90
44316002 90
44316007 90
44316008 90
70516101 87
70516102 87
70516103 ..... 87, 89
70516104 87
70516105 87
70516106 ..... 87, 89
Harness Adapter Plate
70523301 ..... 67, 69
Harness Mounting Plate
70307007 31
Heater Element
70034401P 81
70034402P 81
70034403P 81
70034414P 81
70034415P 81
70034416P 81
High Altitude Orifice Kit
70609903 77
70609904 77
High Voltage Suppression Cable
44239702 77
Hinge Cam Kit
M4772P3 ..... 37, 57
M4773P3 37
Hinged Door
70267701* 57
70267703 57
Hold-Down Clip
35865 ..... 49, 65
Hole Plug
70063201 65
Hose
44073304 69
Hose Clamp
36801 69
Hose Fitting
44069101 69
Hot Surface Warning Label
F8609001 91
F8614301 91

I

Idler Wheel Assembly
70050401P 71
Igniter Cover
70159601 77
Ignition Control
70482001 85
70482002P 85
Ignition Keeper Orifice Bracket
70539901 77
Insulator
M413862 85
Interconnect Harness
44334401 69
Inverter Contactor Coil Harness
44334702 90
Inverter Motor Harness
44335301 90
44335302 90
I/O Control Assembly
70671701 85

J

Jumper Bar
70066501 81
Jumper Harness
D511476 51
442295412 81
44281709 81
Jumper Strip
M400869 81

K

Key
70144101 73
70155601 ..... 51, 69
70155602 51

N/A items do not appear in index.

© Copyright, Alliance Laundry Systems LLC – DO NOT COPY or TRANSMIT

Kickplate
70117601 55
70117616 55

L

Label
D516100 ..... 85, 87, 89
44108201 ..... 47, 49
44190901 47
44286801 85
44286803 ..... 85, 87, 89
44318201 69
70472801 ..... 47, 49
Label Kit
F8614500 91
44318200 69
44324500 69
70534300 47
70535100 91
Lever Arm and Belt Kit
70655101 71
Lever Arm and Bushing Assembly
70653802 71
Light
801432 69
Limit Access Bracket
70554901 73
Limit Thermostat
44328001 73
44328004 77
44328006 81
44328104 77
70530901 73
Lint Panel
70515402 55
70515403LG 55
70515403W 55
70515404DG 55
70515404LG 55
70515404W 55
70515405 55
70515406W 55
Lint Panel Pivot Plate
70017901 55
Lint Screen
70325601 65
Lock Catch Bracket
70654501 45
Lock Shim
70342401 51
Lock, Key and Nut Kit
44089301P 51
70722301 51
70733701 ..... 51, 69
Lower Hinge Gusset
70632002 39
Lower Lug Assembly
70639302 39
70639304 39
Lower Pan
70332401P 65
Lower Rear Assembly
70493301 71
L.P. Conversion Kit
70550202 77
70550214 77
70551902 77
L.P. Valve
44154504 77

M

Machine ID Control Assembly
203361P 17, 19, 23, 25
Magnet
70343101 ..... 55, 57
Magnet Bracket
44290501 55
Male Tab Terminal
00621SG 85
Max Fill Line Label
70707501 35
Mixing Valve
70519801 69
Mixing Valve Shield Bracket
44306601 69
Moisture Sensor Harness
44333903 61
Motor Conduit Mounting Bracket
70521901 71
Motor Contactor Power Harness
44280001 90
44280003 90
44280010 90
44280012 90
Motor Mount Bracket
70564101 71
Motor Mount Plate
70564201 71
Motor Pulley
70559101 71
Mounting Bracket
70601401 69
70604001 31
Mounting Plate
70208801 ..... 17, 19

N

Nameplate
B12389801 51
F8443105 51
F8688001 51
567887 51
70685701 51
Nameplate Overlay
44104501 51
70115601 51
Nameplatel
F8688801 51
Notice Label
D516073 91
F8609501 91
70535901 77
70539601 91

N/A items do not appear in index.

© Copyright, Alliance Laundry Systems LLC – DO NOT COPY or TRANSMIT

70544901 77
Nozzle Bracket
70424201 67
70428601 67
Nut
M400022 ..... 61, 63, 73
M404993 65
M412986 63
M414215 35
21899 65
23951 55
430576 65
44071201 25
44087201 ..... 59, 71
44087301 71
44088001 ..... 35, 37, 39, 85, 87, 89
44088801 51
44333202 71
51236 55
56156 71
70030401 49
70054 ..... 19, 81
N.G. Valve
44154503 77

O

Opto Coupler
200674P 27
Orifice Adapter
70379301 77
Orifice Holder Bracket
70248901 77
Overlay
F8205101 ..... 17, 19
F8696101 ..... 17, 19
F8696201 19
F8696301 ..... 17, 19
F8733901 19
F8734201 19
F8736501 19
70295101 19
70512004 21
70512005 21
70512006 21
70512007 21
70512008 21
70516801 15
70516802 15
70517001 21
70517002 21
70517003 21
70517004 21
70517005 21
70517801 15
70517802 15
70518101 19
70518102 19
70518201 21
70518202 21
70518203 21
70519001 15
70519002 15
70539101 15
70539102 15
70541201 21
70541202 21
70541203 21
70544701 17
70544702 17
70544703 17
70545501 15
70545502 15
70548801 23
70548802 23
70556201 19
70556301 19
70556401 19
70556402 19
70556501 ..... 17, 19
70556502 ..... 17, 19
70556601 19
70556701 19
70556801 19
70556901 19
70557001 ..... 17, 19
70557002 ..... 17, 19
70559001 21
70570301 17
70570302 17
70570303 17
70570601 23
70570602 23
70570801 23
70570802 23
70571001 21
70571002 21
70571003 21
70571101 21
70571102 21
70571103 21
70571104 21
70571401 23
70571402 23
70571601 23
70571602 23
70595401 25
70626301 21
70626302 21
70626303 21
70636101 17
70636102 17
70636103 17
70636201 21
70636202 21
70636203 21
70636204 21
70636205 21
70636302 21
70636303 21
70636401 23
70636402 23
70636501 15
70636502 15
70637601 21
70637602 21
70637603 21
70637604 21
70637605 21
70638201 17
70638202 17
70638203 17
70638301 23
70638302 23
70638701 15

N/A items do not appear in index.

© Copyright, Alliance Laundry Systems LLC – DO NOT COPY or TRANSMIT

70638702 15
70638801 15
70638802 15
70638901 23
70638902 23
70639001 25
70645601 19
70645701 19
70645801 19
70645901 19
70646001 ..... 17, 19
70646002 ..... 17, 19
70646101 19
70646102 19

P

Panel
70553301* 57
70553401* 57
Panel Locator
56079 ..... 51, 55
Panel Lock
44089304 51
44089305 51
Pin
70071401 ..... 37, 57
Pinch Warning Label
F8615701 91
70538401 91
Pipe Clip
70203701 77
Pipe Plug
70346801 77
Plug
70167601 77
70180001 ..... 69, 87, 89
Pop Rivet
M400003 ..... 43, 85
M405750 77
44166601 51
70058501 ..... 37, 39, 49, 55, 57, 65, 83, 85, 89
70058502 ..... 87, 89
70126301 55
70126401 55
Porcelain Touch-Up Paint
122P4P 65
370P4P 65
Power Distribution Block
M413865 ..... 87, 89
Power Distribution Block Cover
44014901P 87, 89
Power Harness
44272101 90
44280101 90
Power Sensor Harness
44334402 69
Primary Air Adjustment Sleeve
70239801 77
Pushbutton Switch
70413301 ..... 15, 17, 19, 23, 45, 51
Push-to-Start Switch
801434W 69

R

Rear Bearing Shim
70355001 63
Rear Cylinder Bearing Housing
70013901 63
Rear Cylinder Channel
70257301 59
70257302 59
Rear Cylinder Channel Plate
70257401 59
Rear Cylinder Seal
70013702 63
Rear Cylinder Seal Support
70506401 63
Rear Lint Panel
70565301 55
Rear Panel
70564901 63
70564902 63
70564903 63
70564904 63
Reed Switch Assembly
F8066804 55
Rivet
70614201 49
70743501 ..... 55, 57
Roller and Seal Kit
70616701 65
Roller Catch Arm
70030301 55
Roller Catch Spacer
70030201 55
Roller Catch Wheel
70297601 55
Roller Seal
70443601 65
Roller Shaft
70249501 65
Roller Support Bracket
70328301 65

S

Screw
F430144 71
F8206901 ..... 31, 85, 87, 89
F8458801 39
M400661 35
M405188 ..... 41, 77
M411072 ..... 17, 19, 31, 49, 51
05161 77
33562 25
39733 ..... 51, 55, 87
430497 ..... 45, 55, 59, 65, 67, 69, 73, 75, 77, 81
430757 55
44349101 ..... 37, 39
51780 ..... 31, 67, 69, 87, 89
51783 85
62588 59
685837 ..... 85, 87, 89
70033502 ..... 37, 57
70072801 55

N/A items do not appear in index.

© Copyright, Alliance Laundry Systems LLC – DO NOT COPY or TRANSMIT

70126101 73
70126104 71
70132301 55
70247701 65
70391101 59
70407301 37
70436301 37
70442101 ..... 35, 57
70501301 71
70508301 71
70546301 71
70576101 37
70640201 39
70640301 39
802822 39
804608 ..... 15, 17, 19, 23, 25, 69

Sensor Harness
44334406 69

Sheet Metal Edge Gasket
70015709 65
70015710 65

Shield
44326801 69

Shock Warning Label
F8614201 ..... 69, 91
F8614401 69

Side Panel
70021502LG 65
70021502*P 57, 65
70021504DG 65
70021504W 65
70253801DG 65
70253801LG 65
70253801*P 65
70253802DG 65
70253802W 65
70640901DG 65
70640901LG 65
70640902DG 65
70640902W 65

Slip Ring Assembly
44222702 61

Slip Ring Holder
70455401 61

Slot Card Plate Assembly
44089501 ..... 17, 19

Snap Bushing
M400770 ..... 77, 87, 89
M402542 ..... 87, 89
70178701 ..... 67, 85

Spacer
70488403 71

Spark Electrode
70548701P 77

Spray Nozzle
70427801 67

Spray Nozzle Hose
70427701 67

Spray Paint
298P4P 65
381P4 65

Spring
70571801 71

Spring Catch Bracket
70543401 71

Standoff
70569603 71

Steam Adapter Kit
70529601 83

Steam Coil
70369101P 83

Steam Control Assembly
70501801 85

Steam Filter Holder
70369301 83

Steam Valve
F8322904P 83

Steam Valve Harness
F8520703 83

Stove Back
70371501 77

Stove Connectors Cover
70365201 81

Stove Grill
70214901 81

Stove Limit Bypass Harness
70564302 83

Stove Limit Harness
70564301 77
70564303 81

Stove Partition
70357201 81

Stove Top and Sides
70333401 77
7052601 81

Strain Relief
44304801 83

Street Elbow
F422304 77
H86070034 77

Support Bearing
70448701 63

Support Bracket Assembly
70283801 57

Support Housing Bearing Assembly
430260P 63

Switch
70411901 75

Switch Assembly
70413401 57

Switch Bracket
70356301 75
70508501 ..... 55, 57

Switch Hole Plug
44057801B 51
44057801LG 51
44057801Q 51
44057801W 51

T

Tensioning Bracket
70569501 71

Terminal
00622SG 85

Terminal Block
430642 85

N/A items do not appear in index.

© Copyright, Alliance Laundry Systems LLC – DO NOT COPY or TRANSMIT

Terminal Block Shield
70333001 85
Thermistor
M414704 73
44064701 67
Thermistor Plate
70424401 67
Thermostat Cover
M414477 77
Top Pan
70641201 65
Top Panel
70586401 65
Transformer
F8491101 85
202757 31
202758 31
Transformer Harness
44272301 31
44272302 31
Trunnion and Seal Kit
70564801 59
70564802 59
Tube Assembly
70427601 67
Tumbler Dolly Kit
M4379P4 65

U

Union Tee
70427901 67
Upper Hinge Gusset
70632001 39
Upper Lug Assembly
70639301 39
70639303 39
USB Bracket
70547001 25
USB Gateway Kit
NK330 31
USB IR Interface Kit
203346 31
USB-Serial Interface Assembly
203440 25

V

Valve
F8322906P 83
Vend Activation Harness
44334004 ..... 15, 17, 19, 23

W

Warning Label
F8611601 ..... 87, 89, 91
44321601 91
44324101 91
44324501 69
44324502 69
70534301 ..... 47, 49
70534302 ..... 47, 49
70534305 91
70536301 91
Warning Label Kit
F8611600 ..... 87, 89
Washer
M400991 ..... 63, 73
70261401 65
70411301 59
Water Valve Harness
44334405 69
Wire Clip
F8449501 85
F8449502 85
Wire Guard
201595P 27
Wire Label
44286802 ..... 85, 87
44286804 85
Wireless Control Label
204692 31
Wireless Network Board Harness
F8536002 31
Wireless Network Control Assembly
203532 31
807211 31
Wireless Network Harness
F8674006 31
Wireless Network Kit
70596301 31
70609701 31

N/A items do not appear in index.

© Copyright, Alliance Laundry Systems LLC – DO NOT COPY or TRANSMIT