Tumble Dryers

50 Pound Capacity

18 Digit Model Numbers with 3 and 5 in 13th Position

Refer to Page 5 for Model Numbers

Parts

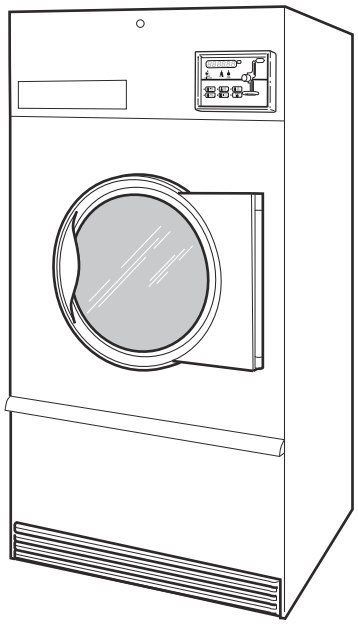

TMB1284C_70591801

Alliance™ Laundry Systems

www.alliancelaundry.com

Part No. 70591801R9
June 2025

Table of Contents

Title	Page
Parts Ordering Information	3
Serial Plate Location	3
Machine Identification	5
Product Overview - Heat Source and Voltage	6
Product Overview - FN Control Suffix	8
Product Overview - DN and NN Control Suffixes	10
Product Overview - B, N and W Control Suffixes	12
Control Box	14
Fire Suppression System Control Box	16
Dual Digital Control	18
Electronic Display Control - Vend Models with B in the 7th Position	20
Electronic Display Control - Vend Models with N or W in the 7th Position	22
Electronic Display Control Overlays- Vend Models with N or W in the 7th Position	24
Electronic Display Control - OPL Models with N in the 7th Position	26
3.5 Inch Graphical Control	28
Coin Drops	30
Coin Drop Kits	32
Network Board, Central Pay and Card Reader Components	34
Emergency Stop Button - OPL Models	36
Cabinet Front Components	38
Cabinet Panels and Nameplates	40
Cabinet Panels and Nameplates - Design 5 S Models	42
Front Panel Assemblies - Design 3 Models	44
Front Panel Assemblies - Design 5 Models	46
Lower Cabinet Front Components	48
Lint Panel Components	50
Cabinet Components	52
Rear Panel and Belt Guard Components	54
Door Assemblies	56
Door Components	58
Hinge Components - Design 3 Models	60
Hinge Components - Design 5 Models	62
Cylinder and Trunnion Components	64
Bearing Components	66
Moisture Sensing Components	68
Drive Motor Components	70
Blower and Exhaust Components	72
Airflow Switch Assembly	74
Gas Heater Components	76
Burner Orifices	78
Electric Heater Components	80

© Copyright 2025, Alliance Laundry Systems LLC

All rights reserved. No part of the contents of this book may be reproduced or transmitted in any form or by any means without the expressed written consent of the publisher.

Steam Heater and Valve 82
Control Tray 84
Accessory Box - Electric 200-240 Volt Models 86
Accessory Box - Electric 380-480 Volt Models 88
Harnesses 90
Labels 91
Parts Index 93

© Copyright, Alliance Laundry Systems LLC – DO NOT COPY or TRANSMIT

Parts Ordering Information

If literature or replacement parts are required, contact the source from whom the machine was purchased or contact Alliance Laundry Systems at (920) 748-3950 for the name and address of the nearest authorized parts distributor.

For technical assistance, call the number listed below:

(920) 748-3121 Ripon, Wisconsin

Serial Plate Location

When calling or writing about your product, be sure to mention model and serial numbers. Model and serial numbers are located on serial plate(s) as shown.

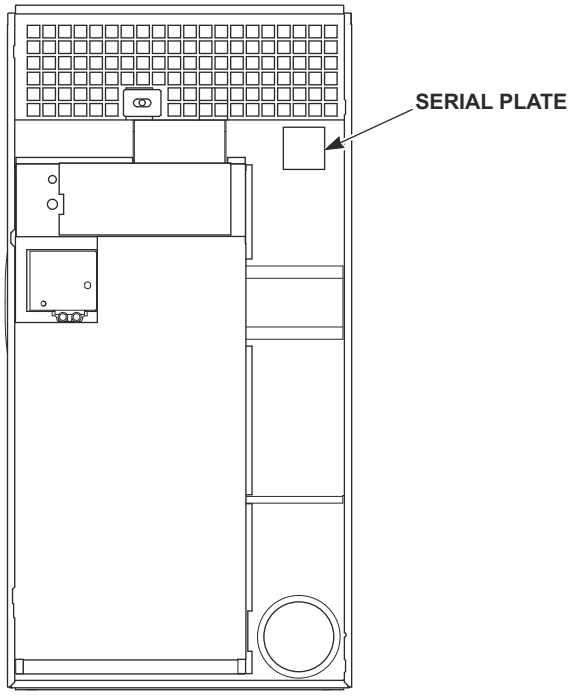

TMB2622N_70591801

© Copyright, Alliance Laundry Systems LLC – DO NOT COPY or TRANSMIT

Notes

© Copyright, Alliance Laundry Systems LLC – DO NOT COPY or TRANSMIT

Machine Identification

Information in this manual is applicable to these machines:

BA050E
BA050L
BA050N
BA050S
BG050D
BG050E
BG050L
BG050N
BG050S
BH050E
BH050L
BH050N
BH050S
BJ050D
BJ050E
BJ050L
BJ050N
BJ050S
BK050E
BK050L
BK050N
BL050E
BL050L
BR050E
BR050S
BU050E
BU050L
BU050N
BU050S
GA050E
GA050L
GA050N
GA050S
GG050E
GG050L
GG050N
GG050S
GH050E
GH050L
GH050N
GH050S
GJ050E
GJ050L
GJ050N
GJ050S
GK050E
GK050L
GK050N
GU050E
GU050L
GU050N
GU050S
HA050E
HA050L
HA050N
HA050S
HG050D
HG050E
HG050L
HG050N
HG050S
HH050E
HH050L
HH050N
HH050S
HJ050D
HJ050E
HJ050L
HJ050N
HJ050S
HK050E
HK050L
HK050N
HL050E
HL050L
HR050E
HR050S
HT050C
HT050E
HT050L
HT050N
HT050S
HU050E
HU050L
HU050N
HU050S
KT050E
KT050L
KT050N
KT050S
MG050D
MG050E
MG050L
MG050N
MG050S
MJ050D
MJ050E
MJ050L
MJ050N
MJ050S
NA050E
NA050L
NA050N
NA050S
NG050E
NG050L
NG050N
NG050S
NH050E
NH050L
NH050N
NH050S
NJ050E
NJ050L
NJ050N
NJ050S
NK050E
NK050L
NK050N
NR050E
NR050S
NT050E
NT050L
NT050N
NT050S
NU050E
NU050L
NU050N
NU050S
PA050E
PA050L
PA050N
PA050S
PG050E
PG050L
PG050N
PG050S
PH050E
PH050L
PH050N
PH050S
PJ050E
PJ050L
PJ050N
PJ050S
PK050E
PK050L
PK050N
PL050E
PL050L
PR050E
PR050S
PT050C
PT050E
PT050L
PT050N
PT050S
PU050E
PU050L
PU050N
PU050S
SA050E
SA050L
SA050N
SA050S
SG050D
SG050E
SG050L
SG050N
SG050S
SH050E
SH050L
SH050N
SH050S
SJ050D
SJ050E
SJ050L
SJ050N
SJ050S
SK050E
SK050L
SK050N
SL050E
SL050L
SR050E
SR050S
ST050C
ST050E
ST050L
ST050N
ST050S
SU050E
SU050L
SU050N
SU050S
UA050E
UA050L
UA050N
UA050S
UG050D
UG050E
UG050L
UG050N
UG050S
UH050E
UH050L
UH050N
UH050S
UJ050D
UJ050E
UJ050L
UJ050N
UJ050S
UK050E
UK050L
UK050N
UL050E
UL050L
UR050E
UR050S
UT050C
UT050E
UT050L
UT050N
UT050S
UU050E
UU050L
UU050N
UU050S

© Copyright, Alliance Laundry Systems LLC – DO NOT COPY or TRANSMIT

Product Overview - Heat Source and Voltage

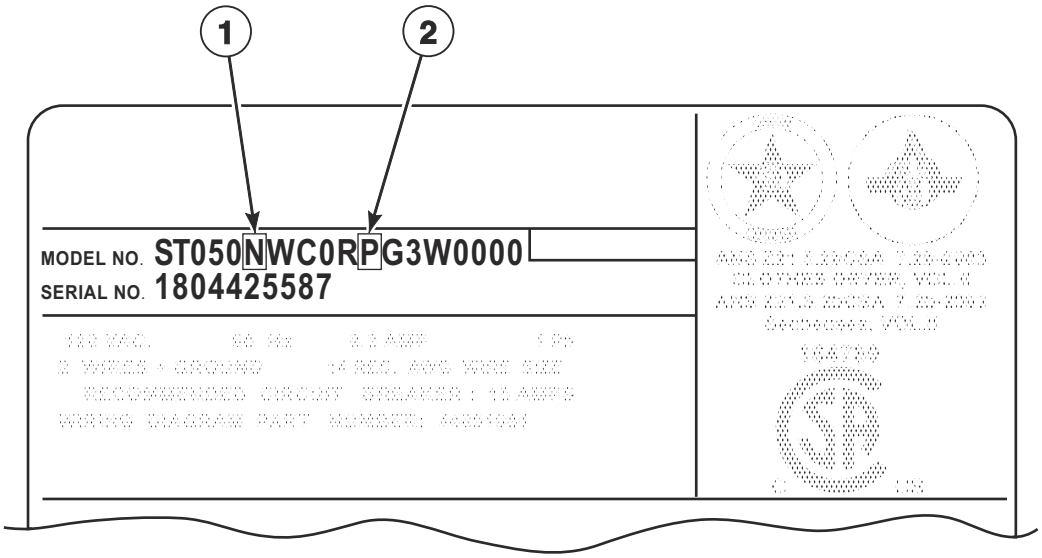

TMB3523P_70591801

© Copyright, Alliance Laundry Systems LLC – DO NOT COPY or TRANSMIT

Product Overview - Heat Source and Voltage

REF	PART NO.	DESCRIPTION	COMMENTS
1	-	Heat Source	C: Steam (CRN) D: Liquid Petroleum Gas (L.P.) E: Electric L: Liquid Petroleum Gas (L.P.) N: Natural Gas (N.G.) S: Steam
2	-	Voltage	B:100-120 Volt/50-60 Hertz/1 Phase; Gas and steam models E: 230-240 Volt/50-60 Hertz/1 Phase; Electric models F: 200-208 Volt/50-60 Hertz/3 Phase; Electric models G: 230-240 Volt/50-60 Hertz/3 Phase; Electric models H: 380 Volt/50-60 Hertz/3 Phase; Electric models J: 400-415 Volt/50-60 Hertz/3 Phase; Electric models K: 440 Volt/50-60 Hertz/3 Phase; Electric models L: 460-480 Volt/50-60 Hertz/3 Phase; Electric models N: 440-480 Volt/50-60 Hertz/3 Phase; Gas and steam models P: 380-415 Volt/50-60 Hertz/3 Phase; Gas and steam models Q: 200-240 Volt/50-60 Hertz/3Phase; Gas and steam models X: 200-240 Volt/50-60 Hertz/1-3 Phase; Gas and steam models

© Copyright, Alliance Laundry Systems LLC – DO NOT COPY or TRANSMIT

Product Overview - FN Control Suffix

All Models Except M Models; OPL

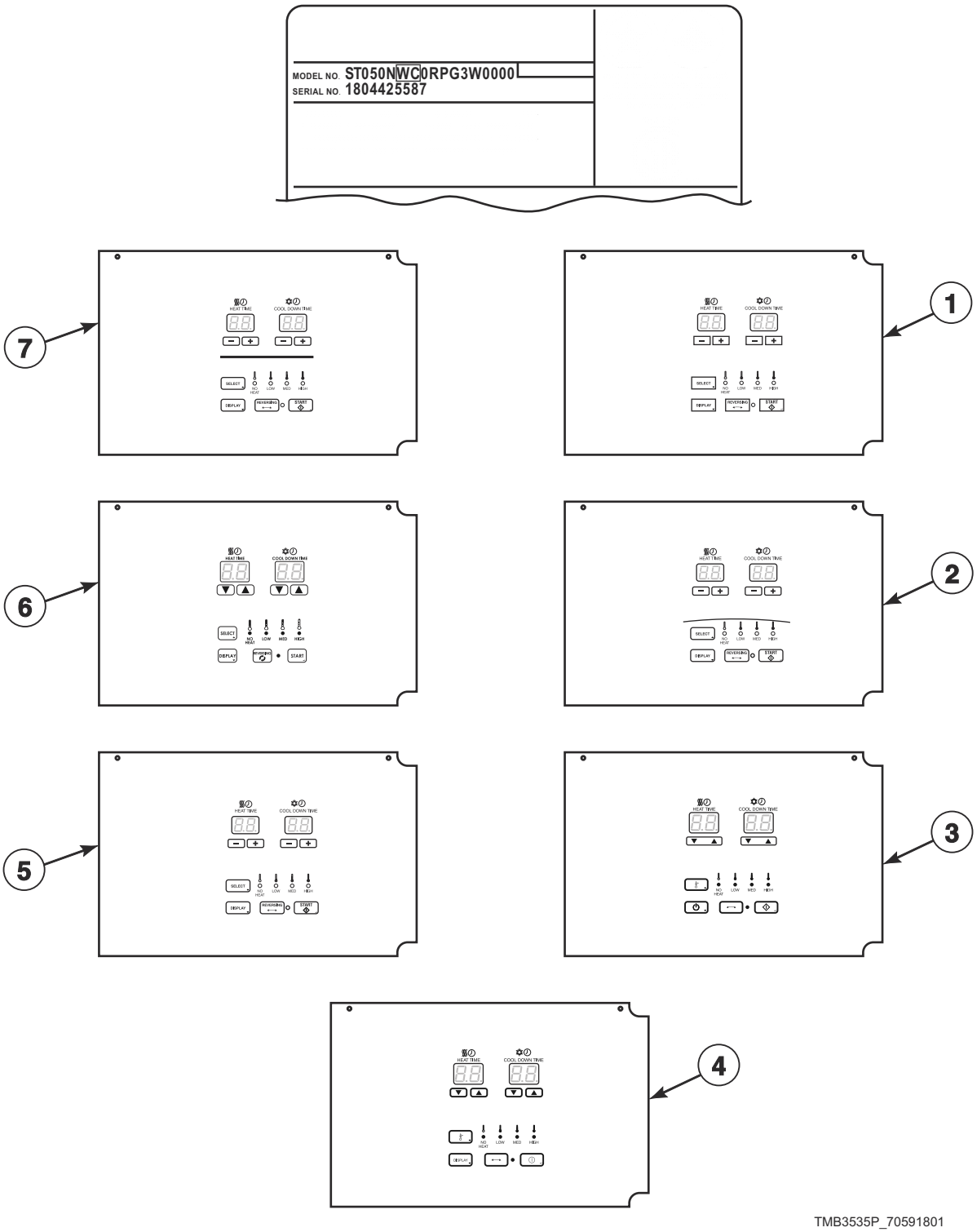

TMB3535P_70591801

© Copyright, Alliance Laundry Systems LLC – DO NOT COPY or TRANSMIT

Product Overview - FN Control Suffix

REF	PART NO.	DESCRIPTION	COMMENTS
1	-	Dual Digital Control	H models
2	-	Dual Digital Control	U models
3	-	Dual Digital Control	B models
4	-	Dual Digital Control	P models
5	-	Dual Digital Control	N models
6	-	Dual Digital Control	G and K models
7	-	Dual Digital Control	S models

© Copyright, Alliance Laundry Systems LLC – DO NOT COPY or TRANSMIT

Product Overview - DN and NN Control Suffixes

All Models Except M Models

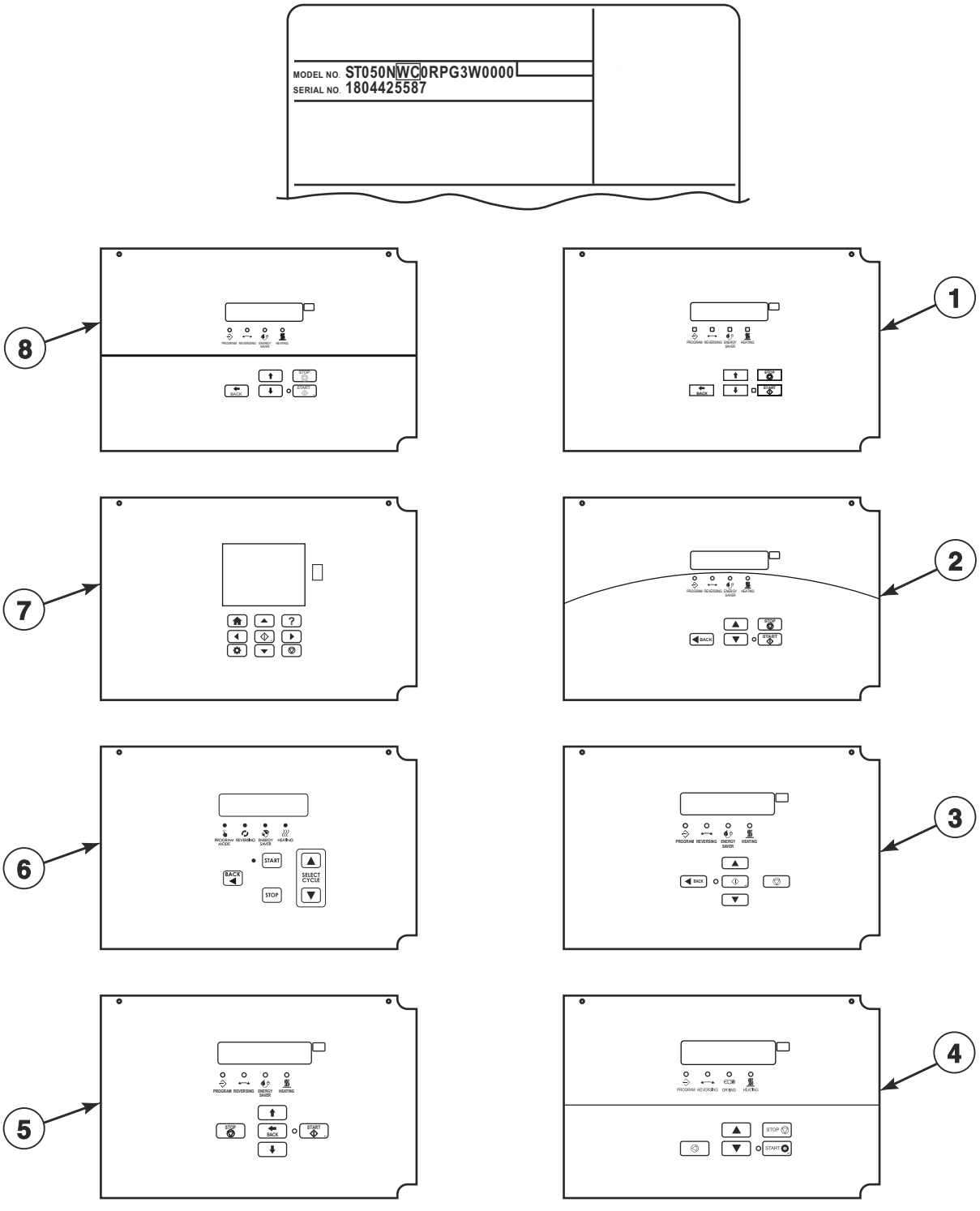

TMB3536P_70591801

© Copyright, Alliance Laundry Systems LLC – DO NOT COPY or TRANSMIT

Product Overview - DN and NN Control Suffixes

REF	PART NO.	DESCRIPTION	COMMENTS
1	-	Galaxy Control	H models
2	-	M-Series Control	U models
3	-	OPTimum Control	B models
4	-	OPL Micro Control	P models
5	-	OPL Micro Control	N models
6	-	OPL Micro Control	G and K models
7	-	UniLinc Control	U models
8	-	Quantum Gold Control	S models

© Copyright, Alliance Laundry Systems LLC – DO NOT COPY or TRANSMIT

Product Overview - B, N and W Control Suffixes

7th Position of the Model Number; All Models Except NT Models; Vend

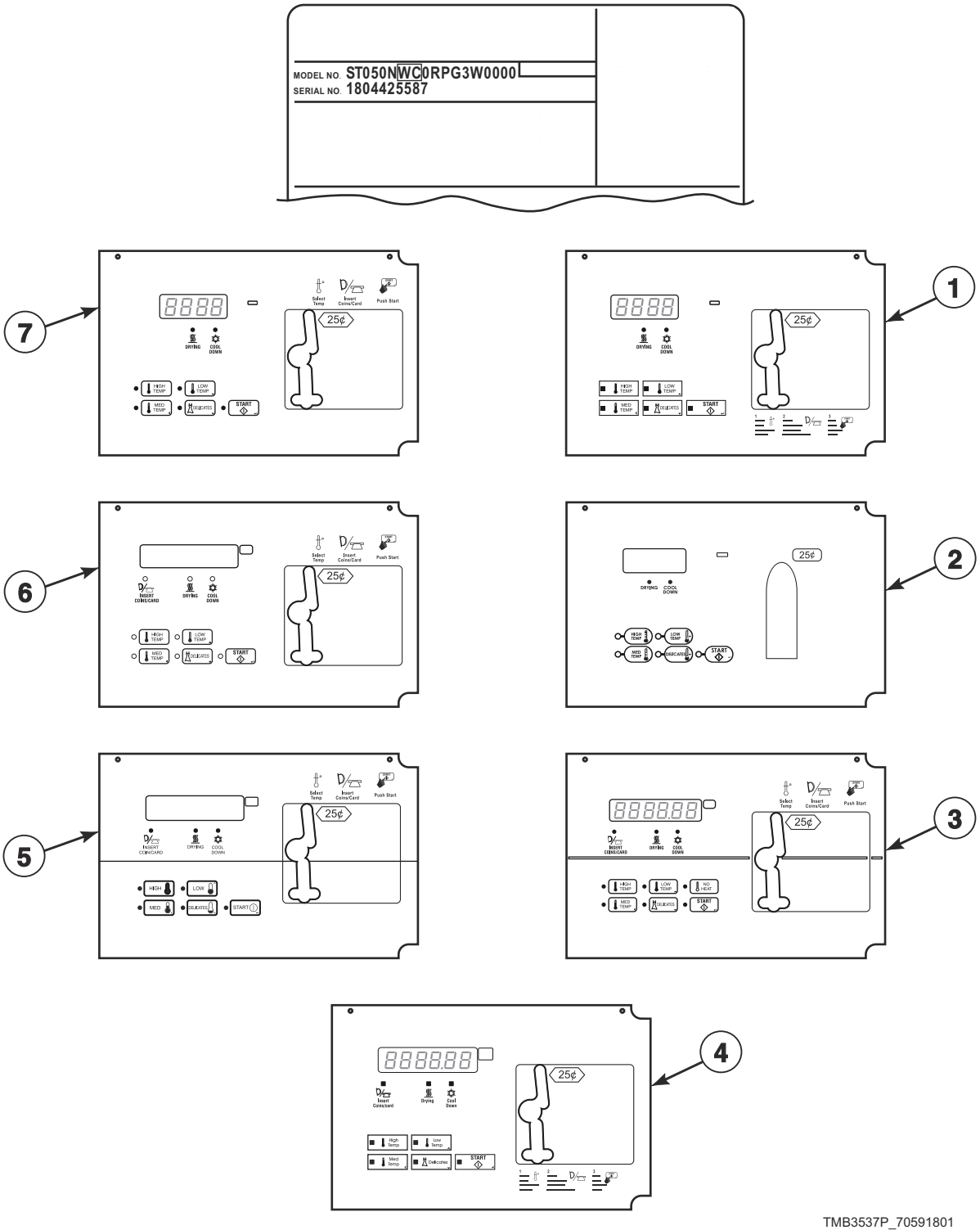

TMB3537P_70591801

© Copyright, Alliance Laundry Systems LLC – DO NOT COPY or TRANSMIT

Product Overview - B, N and W Control Suffixes

REF	PART NO.	DESCRIPTION	COMMENTS
1	-	Basic Electronic Control	H and N models
2	-	Basic Electronic Control	G and K models
3	-	Quantum Gold Control	M and S models
4	-	Galaxy 600	H models
5	-	XQ Control	P models
6	-	EVO7S Control	B models
7	-	MDC II Control	S models

© Copyright, Alliance Laundry Systems LLC – DO NOT COPY or TRANSMIT

Control Box

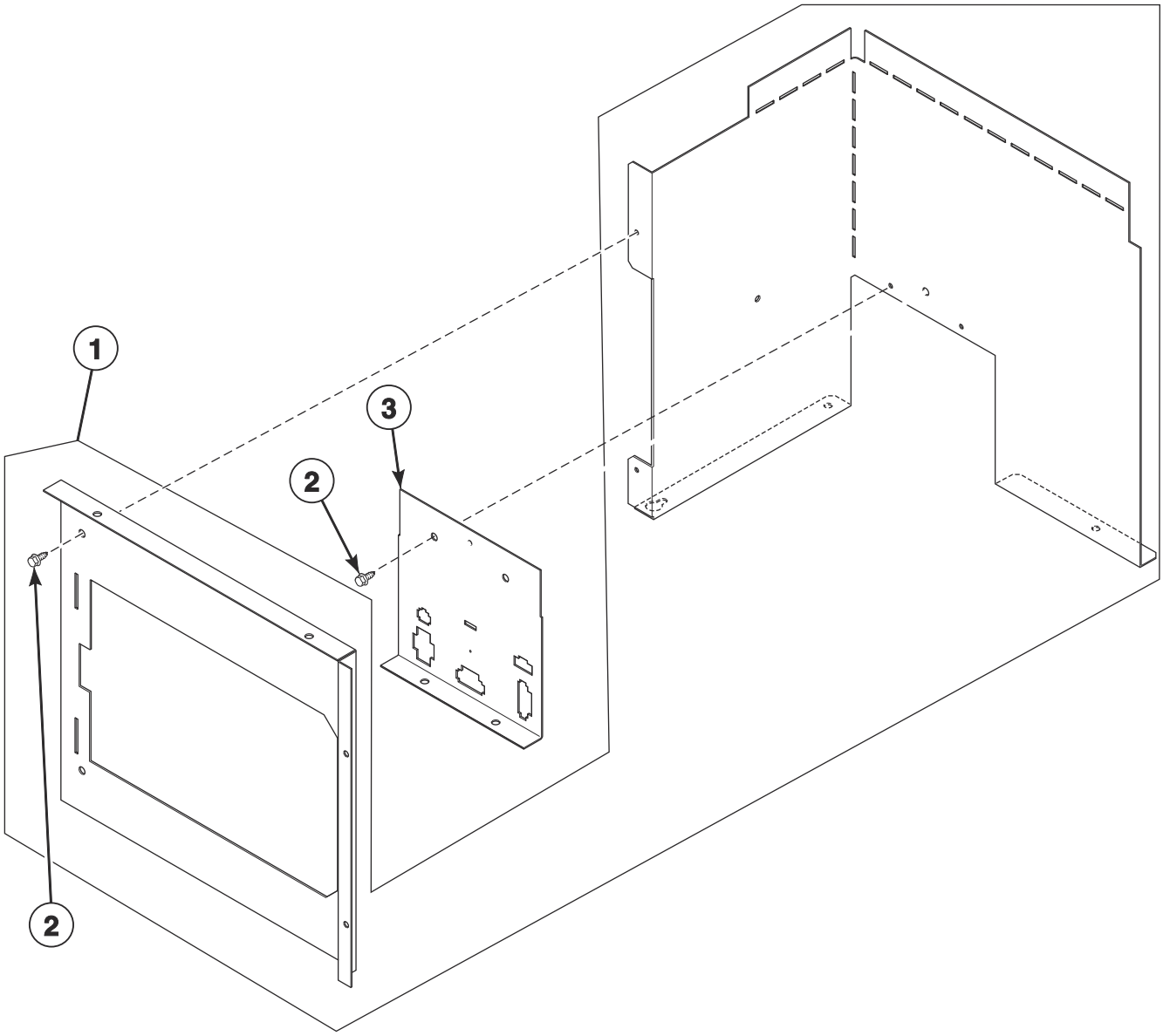

TMB3524P_70591801

© Copyright, Alliance Laundry Systems LLC – DO NOT COPY or TRANSMIT

Control Box

REF	PART NO.	DESCRIPTION	COMMENTS
	44334201	Main Harness	
1	44180101	Control Box Assembly	
2	430497	Screw	
3	70307007	Harness Mounting Plate	

© Copyright, Alliance Laundry Systems LLC – DO NOT COPY or TRANSMIT

Fire Suppression System Control Box

B, G, H, K, NT, P, S and U Gas and Steam Models

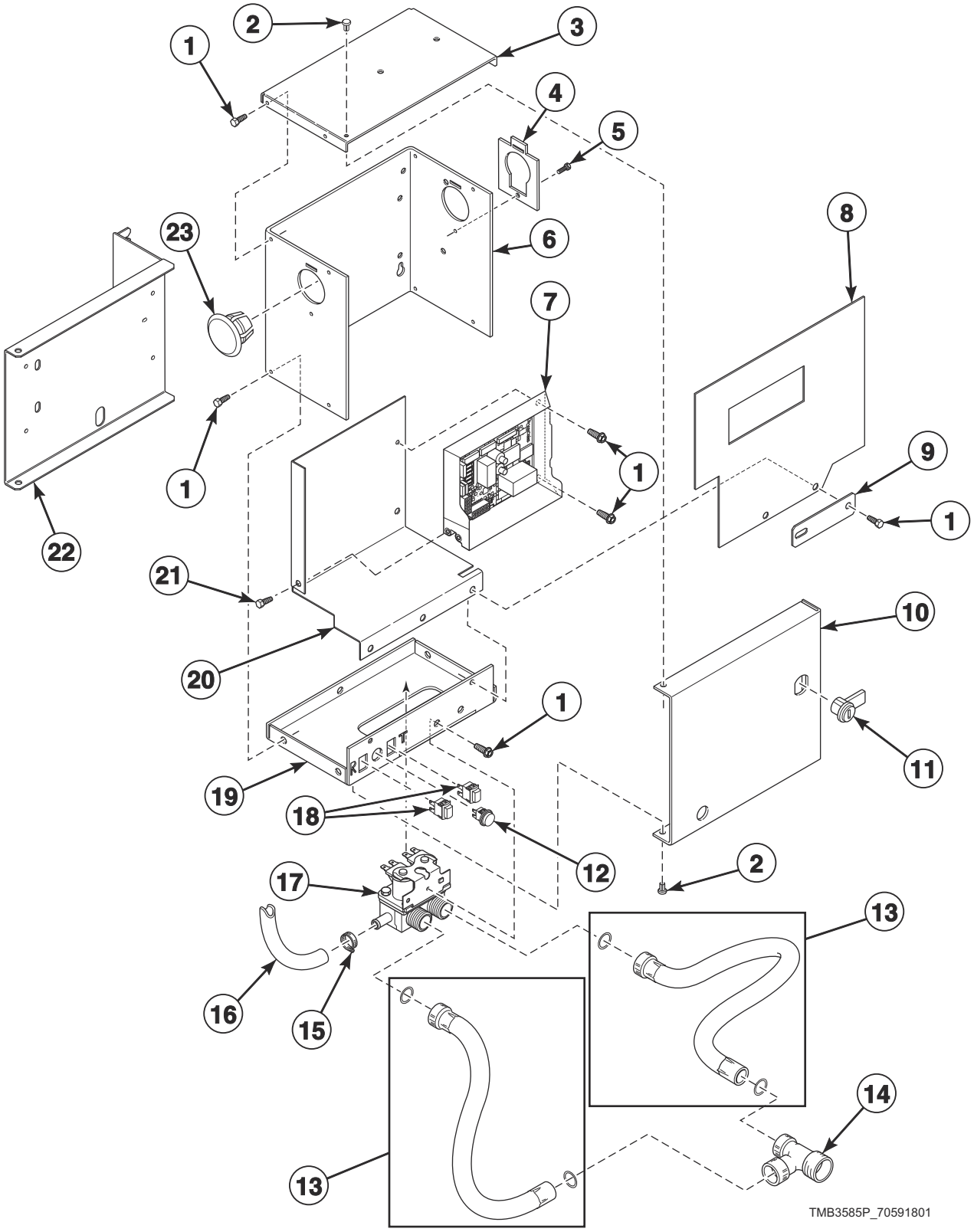

© Copyright, Alliance Laundry Systems LLC – DO NOT COPY or TRANSMIT

Fire Suppression System Control Box

REF	PART NO.	DESCRIPTION	COMMENTS
	44340301	Cold Weather Kit	
	70155601	Key	RL001; Use with item 11
	44334404	Control Harness	
	44334405	Water Valve Harness	
	44334402	Power Sensor Harness	
	44334406	Sensor Harness	
	44334401	Interconnect Harness	
	44324501	Warning Label	F.S.S.; North America models
	44324500	Label Kit	F.S.S.; IEC models
	F8614401	Shock Warning Label	North America models
	F8614201	Shock Warning Label	IEC models
	44318200	Label Kit	IEC models
	44324502	Warning Label	
	44318201	Label	North America models
1	430497	Screw	
2	M400713	Drive Rivet	
3	44307101	Control Box Top	
4	70523301	Harness Adapter Plate	
5	51780	Screw	
6	44306701	Control Box Housing	
7	70511601	Control	
8	44326801	Shield	
9	70551701	Filter Mounting Plate	
10	44065201	Control Box Cover	
11	70733701	Lock, Key and Nut Kit	RL001 key code; Optional if same key is to be used for control lock
12	801432	Light	
13	202799	Fill Hose	2 required; GHT
	202800	Fill Hose	2 required; BSPP
14	44069101	Hose Fitting	North America models
15	36801	Hose Clamp	
16	44073304	Hose	14 inches; Outlet hose
17	70519801	Mixing Valve	
18	801434W	Push-to-Start Switch	2 required
19	44065301	Control Box Base	
20	44306601	Mixing Valve Shield Bracket	
21	804608	Screw	
22	44308701	Mount Bracket	
23	70180001	Plug	

© Copyright, Alliance Laundry Systems LLC – DO NOT COPY or TRANSMIT

Dual Digital Control

All Models Except M with F in the 7th Position

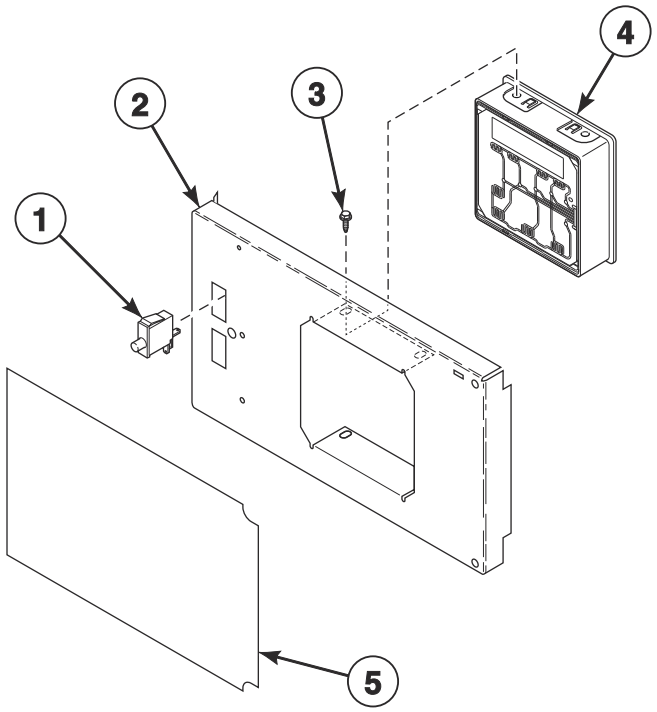

TMB3505P_70591801

© Copyright, Alliance Laundry Systems LLC – DO NOT COPY or TRANSMIT

Dual Digital Control

REF	PART NO.	DESCRIPTION	COMMENTS
	44334004	Vend Activation Harness	
1	70413301	Pushbutton Switch	
2	70497101	Control Plate	Design 3 and 5 H and U models; Design 3 S models; All other models
3	804608	Screw	4 required
4	70523101	Control Assembly	P models; Blue
	70479801	Control Assembly	G, H, K, N, S and U models; Green
	70479901	Control Assembly	B models; Red
5	70539102	Overlay	B models; Nonreversing
	70539101	Overlay	B models; Reversing
	70547502	Overlay	G and K models; Nonreversing
	70547501	Overlay	G and K models; Reversing
	70517802	Overlay	H models; Nonreversing; Design 3
	70517801	Overlay	H models; Reversing; Design 3
	70636502	Overlay	H models; Nonreversing; Design 5
	70636501	Overlay	H models; Reversing; Design 5
	70545502	Overlay	P models; Nonreversing
	70545501	Overlay	P models; Reversing
	70516802	Overlay	N models; Design 3 S models; Nonreversing
	70516801	Overlay	N models; Design 3 S models; Reversing
	70638702	Overlay	S models; Nonreversing; Design 5
	70638701	Overlay	S models; Reversing; Design 5
	70519002	Overlay	U models; Nonreversing; Design 3
	70519001	Overlay	U models; Reversing; Design 3
	70638802	Overlay	U models; Nonreversing; Design 5
	70638801	Overlay	U models; Reversing; Design 5

© Copyright, Alliance Laundry Systems LLC – DO NOT COPY or TRANSMIT

Electronic Display Control - Vend Models with B in the 7th Position

G, H, K, N and S Models

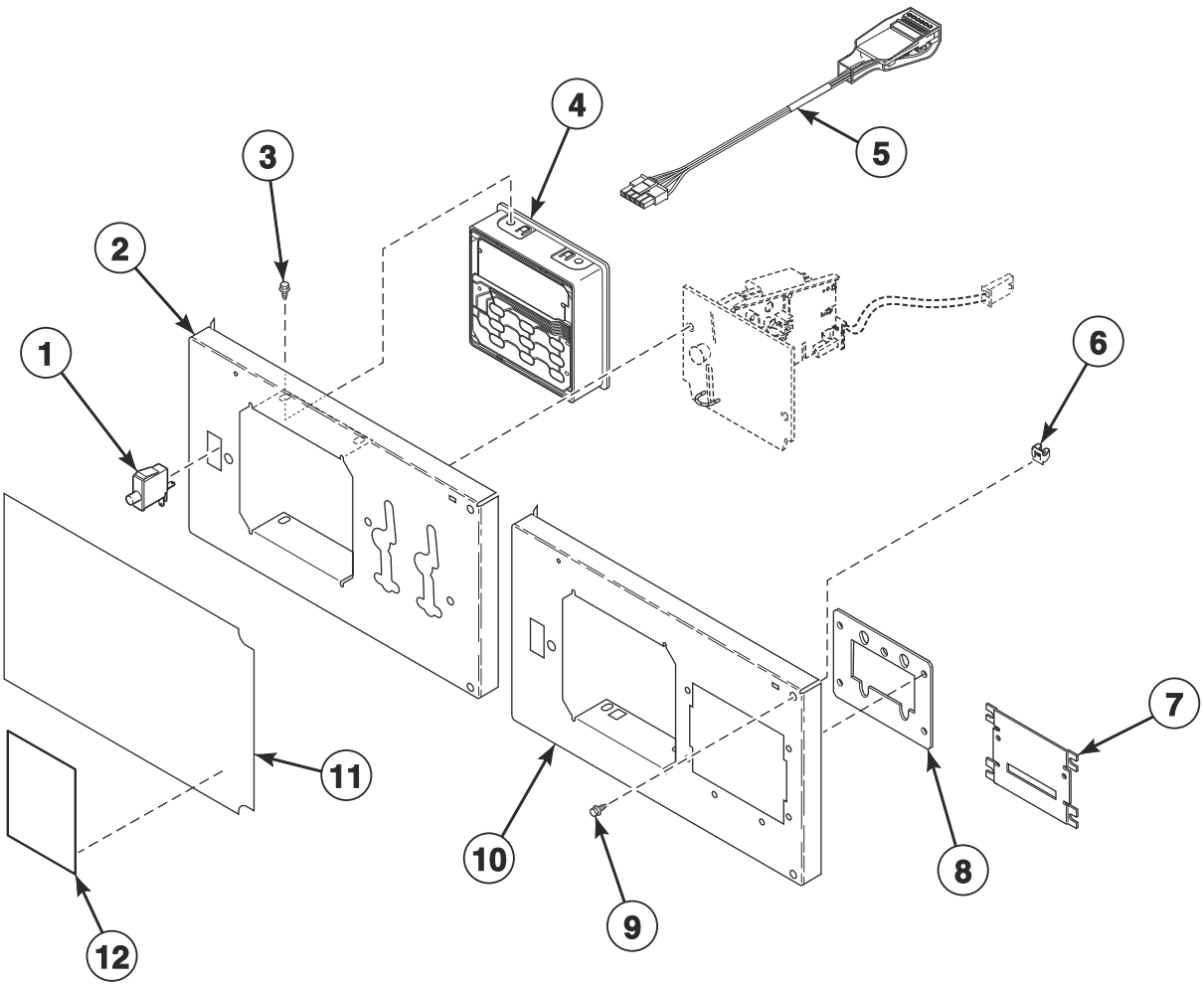

TMB3678P_70591801

© Copyright, Alliance Laundry Systems LLC – DO NOT COPY or TRANSMIT

Electronic Display Control - Vend Models with B in the 7th Position

REF	PART NO.	DESCRIPTION	COMMENTS
	44334004	Vend Activation Harness	
	44342801	Central Pay Harness	Models through November 2018
	44374701	App Pay Overlay Kit	
1	70413301	Pushbutton Switch	
2	70496601	Control Plate and Studs Assembly	Coin and central pay; Design 3 and 5 H models; Design 3 S models; All other models
3	804608	Screw	4 required
4	70478803P	Control Assembly	
5	203361P	Machine ID Control Assembly	Model or serial number is required when ordering
6	70030501	Expansion Clip	2 required
7	44089501	Slot Card Plate Assembly	H, N and S models; Included in literature packet
8	70208801	Mounting Plate	
9	M411072	Screw	2 required
10	70497201	Control Plate Assembly	Card and card ready; Design 3 and 5 H models; Design 3 S models; All other models
11	70544701	Overlay	N models; Design 3 S models; Single drop
	70544702	Overlay	N models; Design 3 S models; Dual drop
	70544703	Overlay	N models; Design 3 S models; Card ready
	70638201	Overlay	S models; Single drop; Design 5
	70638202	Overlay	S models; Dual drop; Design 5
	70638203	Overlay	S models; Card ready; Design 5
	70570301	Overlay	H models; Single drop; Design 3
	70570302	Overlay	H models; Dual drop; Design 3
	70570303	Overlay	H models; Card ready; Design 3
	70636101	Overlay	H models; Single drop; Design 5
	70636102	Overlay	H models; Dual drop; Design 5
	70636103	Overlay	H models; Card ready; Design 5
	70547401	Overlay	G and K models; Single drop
	70547402	Overlay	G and K models; Dual drop
	70548101	Overlay	G and K models; Card ready
12	F8205101	Overlay	Black; Single drop; Left; Design 3
	F8696101	Overlay	Black; Single drop; Left; Design 5
	70557001	Overlay	N models; Design 3 S models; Prep for card
	70557002	Overlay	N models; Design 3 S models; Central pay
	F8696301	Overlay	S models; Prep for card; Design 5
	70556501	Overlay	H models; Prep for card; Design 3
	70556502	Overlay	H models; Central pay; Design 3
	70646001	Overlay	H models; Prep for card; Design 5
	70646002	Overlay	H models; Central pay; Design 5

© Copyright, Alliance Laundry Systems LLC – DO NOT COPY or TRANSMIT

Electronic Display Control - Vend Models with N or W in the 7th Position

B, H, M, P and S Models

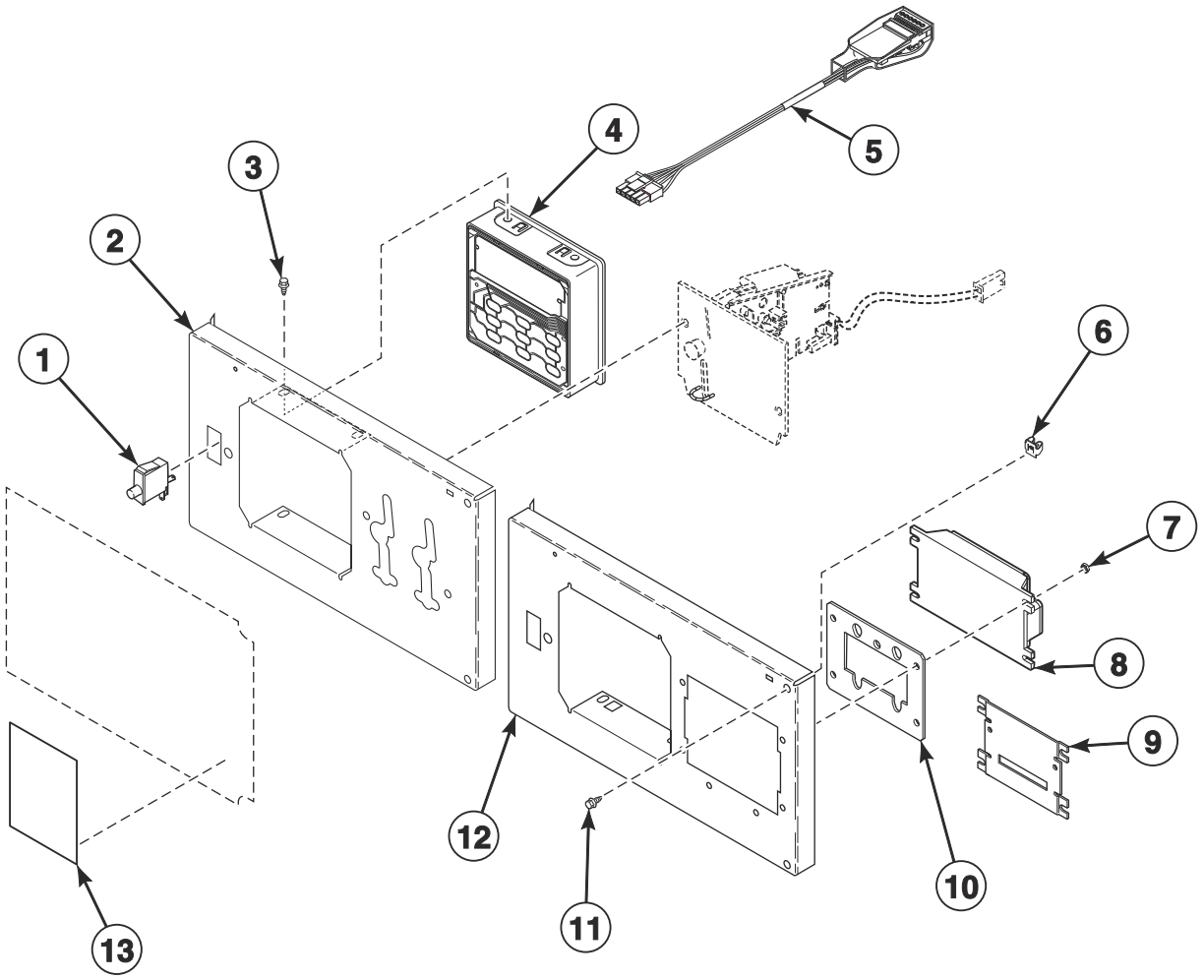

TMB3832P

© Copyright, Alliance Laundry Systems LLC – DO NOT COPY or TRANSMIT

Electronic Display Control - Vend Models with N or W in the 7th Position

REF	PART NO.	DESCRIPTION	COMMENTS
	44334004	Vend Activation Harness	
	F8719301	Fob Communication Harness	
	44374701	App Pay Overlay Kit	
1	70413301	Pushbutton Switch	
2	70496601	Control Plate and Studs Assembly	Coin and central pay; Design 3 and 5 H models; Design 3 S models; All other models
3	804608	Screw	4 required
4	70523003	Control Assembly	P models; Blue
	70478803P	Control Assembly	H, M and S models; Green
	70478903	Control Assembly	B models; Red
5	203361P	Machine ID Control Assembly	Model or serial number is required when ordering
6	70030501	Expansion Clip	
7	70054	Nut	
8	205135	Fob Reader Control Assembly	
9	44089501	Slot Card Plate Assembly	
10	70208801	Mounting Plate	
11	M411072	Screw	
12	70497201	Control Plate Assembly	Card, card ready and FOB; Design 3 and 5 H models; Design 3 S models; All other models
13	F8205101	Overlay	S models; Single drop; Left; Design 3
	70557001	Overlay	B models; Design 3 S models; Prep for card
	70557002	Overlay	B models; Design 3 S models; Central pay
	70295101	Overlay	S models; World drop; Design 3
	F8696101	Overlay	S models; Single drop; Left; Design 5
	F8696301	Overlay	S models; Prep for card; Design 5
	F8696201	Overlay	S models; World drop; Design 5
	70556801	Overlay	H models; World drop; Design 3
	70556501	Overlay	H models; Prep for card; Design 3
	70556502	Overlay	H models; Central pay; Design 3
	70556601	Overlay	H models; Single drop; Left; Design 3
	70556901	Overlay	H models; Citron; World drop; Design 3
	70518101	Overlay	H models; Citron; Prep for card; Design 3
	70518102	Overlay	H models; Citron; Central pay; Design 3
	70556701	Overlay	H models; Citron; Left; Design 3
	70645901	Overlay	H models; World drop; Design 5
	70646001	Overlay	H models; Prep for card; Design 5
	70646002	Overlay	H models; Central pay; Design 5
	70645601	Overlay	H models; Single drop; Left; Design 5
	70645801	Overlay	H models; Citron; World drop; Design 5
	70646101	Overlay	H models; Citron; Prep for card; Design 5
	70645701	Overlay	H models; Citron; Single drop; Left; Design 5
	70646102	Overlay	H models; Citron; Central pay; Design 5
	70556201	Overlay	P models; Single drop; Right
	70556401	Overlay	P models; Prep for card
	70556402	Overlay	P models; Central pay
	70556301	Overlay	P models; Single drop; Left
	F8733901	Overlay	S models; FOB
	F8734201	Overlay	H models; FOB
	F8736501	Overlay	H models; Citron; FOB

© Copyright, Alliance Laundry Systems LLC – DO NOT COPY or TRANSMIT

Electronic Display Control Overlays- Vend Models with N or W in the 7th Position

B, G, H, K, M, P and S Models

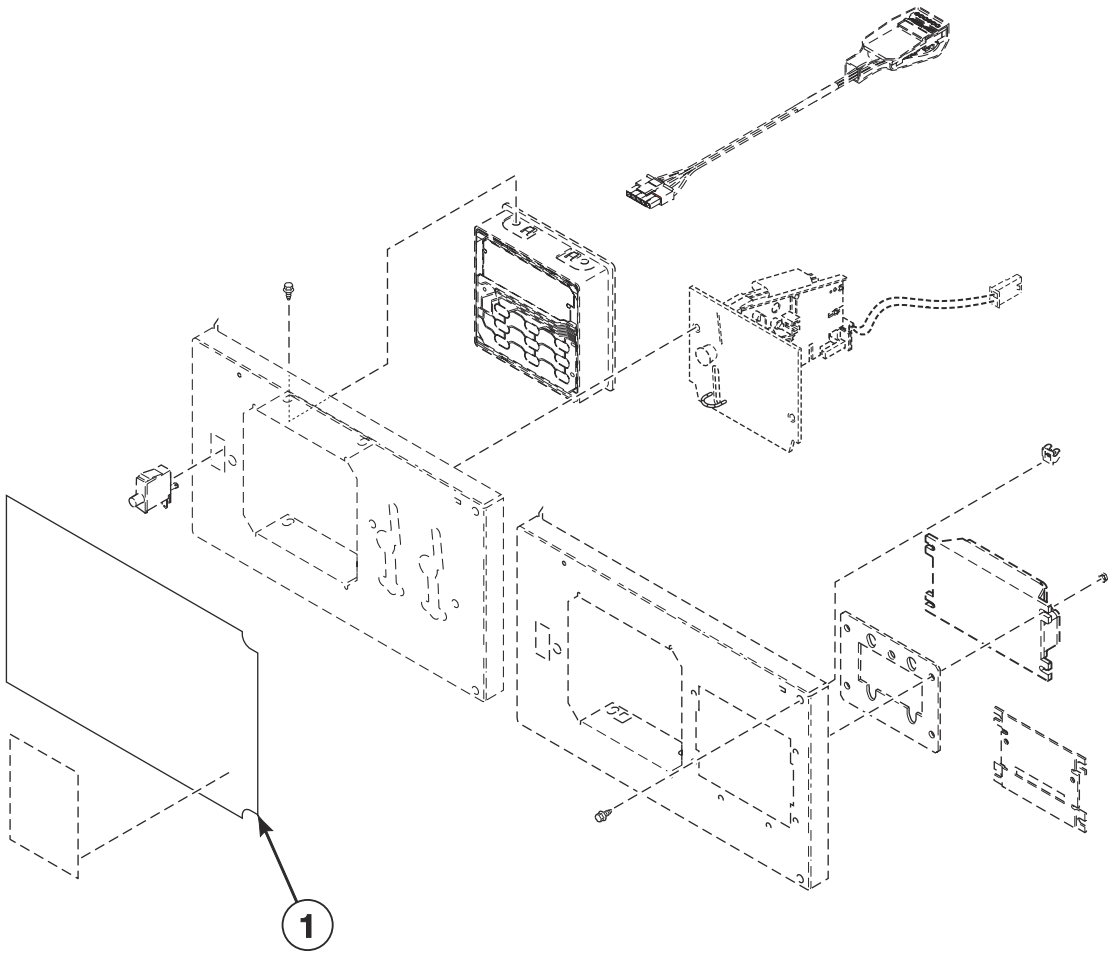

TMB3832PA

© Copyright, Alliance Laundry Systems LLC – DO NOT COPY or TRANSMIT

Electronic Display Control Overlays- Vend Models with N or W in the 7th Position

REF	PART NO.	DESCRIPTION	COMMENTS
1	70512004	Overlay	S models; Single drop; Design 3
	70512005	Overlay	S models; Dual drop; Design 3
	70512006	Overlay	S models; Card ready; Design 3
	70512007	Overlay	S models; Central pay; Design 3
	70512008	Overlay	S models; World drop; Design 3
	70637601	Overlay	S models; Single drop; Design 5
	70637602	Overlay	S models; Dual drop; Design 5
	70637603	Overlay	S models; Card ready; Design 5
	70637604	Overlay	S models; Central pay; Design 5
	70637605	Overlay	S models; World drop; Design 5
	70626301	Overlay	S models; Single drop; English/Spanish; Design 3
	70626302	Overlay	S models; Dual drop; English/Spanish; Design 3
	70626303	Overlay	S models; Card ready; English/Spanish; Design 3
	70559001	Overlay	Models SG050D and SJ050D
	70572601	Overlay	M models
	70517001	Overlay	H models; Single drop; Design 3
	70517002	Overlay	H models; Dual drop; Design 3
	70517003	Overlay	H models; Card ready; Design 3
	70517004	Overlay	H models; Central pay; Design 3
	70517005	Overlay	H models; World drop; Design 3
	70636201	Overlay	H models; Single drop; Design 5
	70636202	Overlay	H models; Dual drop; Design 5
	70636203	Overlay	H models; Card ready; Design 5
	70636204	Overlay	H models; Central pay; Design 5
	70636205	Overlay	H models; World drop; Design 5
	70571001	Overlay	H models; Single drop; Cityscape
	70571002	Overlay	H models; Dual drop; Cityscape
	70571003	Overlay	H models; Card ready; Cityscape
	70518201	Overlay	H models; Single drop; Citron; Design 3
	70518202	Overlay	H models; Dual drop; Citron; Design 3
	70518203	Overlay	H models; Card ready; Citron; Design 3
	70636301	Overlay	H models; Single drop; Citron; Design 5
	70636302	Overlay	H models; Dual drop; Citron; Design 5
	70636303	Overlay	H models; Card ready; Citron; Design 5
	70571101	Overlay	B models; Single drop
	70571102	Overlay	B models; Dual drop
	70571103	Overlay	B models; Card ready
	70541201	Overlay	P models; Single drop
	70541202	Overlay	P models; Dual drop
	70541203	Overlay	P models; Card ready
	70626001	Overlay	G and K models; Single drop
	70626002	Overlay	G and K models; Dual drop
	70626101	Overlay	G and K models; Card ready

© Copyright, Alliance Laundry Systems LLC – DO NOT COPY or TRANSMIT

Electronic Display Control - OPL Models with N in the 7th Position

All Models Except M Models

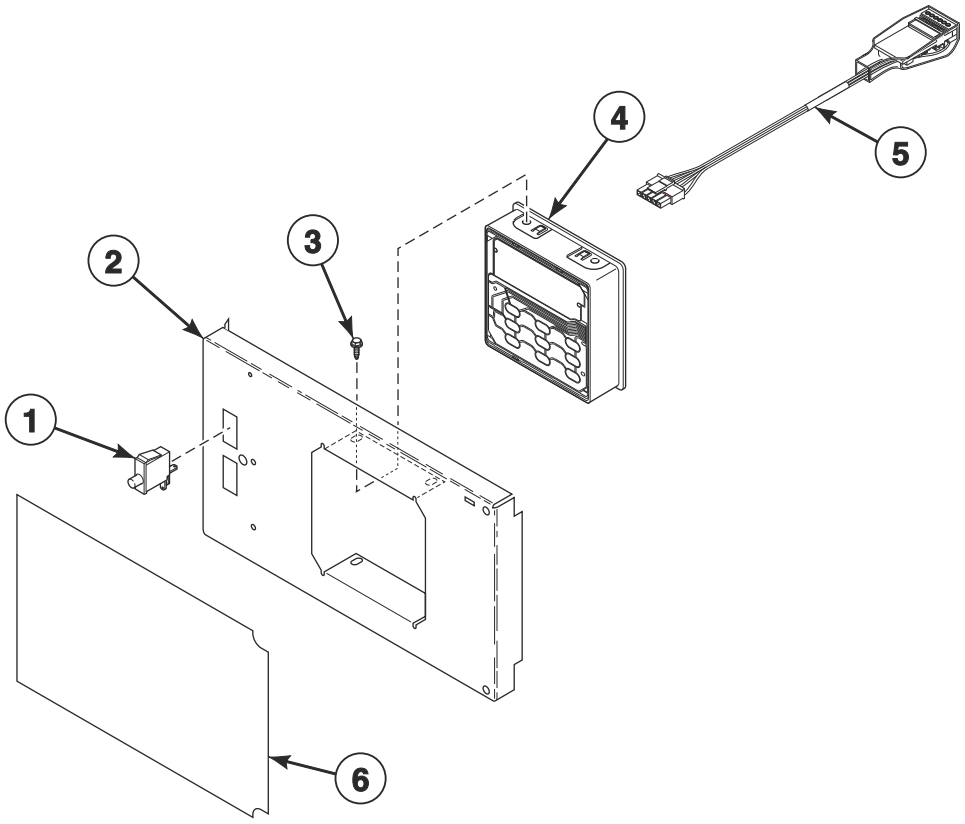

TMB3680P_70591801

© Copyright, Alliance Laundry Systems LLC – DO NOT COPY or TRANSMIT

Electronic Display Control - OPL Models with N in the 7th Position

REF	PART NO.	DESCRIPTION	COMMENTS
	44334004	Vend Activation Harness	
1	70413301	Pushbutton Switch	
2	70497101	Control Plate	Design 3 and 5 H and U models; Design 3 S models; All other models
3	804608	Screw	4 required
4	70523004	Control Assembly	P models
	70478804	Control Assembly	G, H, K, N, S and U models
	70478904	Control Assembly	B models
5	203361P	Machine ID Control Assembly	Model or serial number is required when ordering
6	70570601	Overlay	S models; Reversing; Design 3
	70570602	Overlay	S models; Nonreversing; Design 3
	70638301	Overlay	S models; Reversing; Design 5
	70638302	Overlay	S models; Nonreversing; Design 5
	70571401	Overlay	U models; Reversing; Design 3
	70571402	Overlay	U models; Nonreversing; Design 3
	70638901	Overlay	U models; Reversing; Design 5
	70638902	Overlay	U models; Nonreversing; Design 5
	70570801	Overlay	H models; Reversing; Design 3
	70570802	Overlay	H models; Nonreversing; Design 3
	70636401	Overlay	H models; Reversing; Design 5
	70636402	Overlay	H models; Nonreversing; Design 5
	70548801	Overlay	B models; Reversing
	70548802	Overlay	B models; Nonreversing
	70547801	Overlay	G and K models; Reversing
	70547802	Overlay	G and K models; Nonreversing
	70571601	Overlay	P models; Reversing
	70571602	Overlay	P models; Nonreversing
	70572401	Overlay	NT models through 10/9/19; All other N models; Reversing
	70572402	Overlay	NT models through 10/9/19; All other N models; Nonreversing
	70570601	Overlay	NT models starting 10/10/19; Reversing
	70570602	Overlay	NT models starting 10/10/19; Nonreversing

© Copyright, Alliance Laundry Systems LLC – DO NOT COPY or TRANSMIT

3.5 Inch Graphical Control

U models with D in the 7th Position

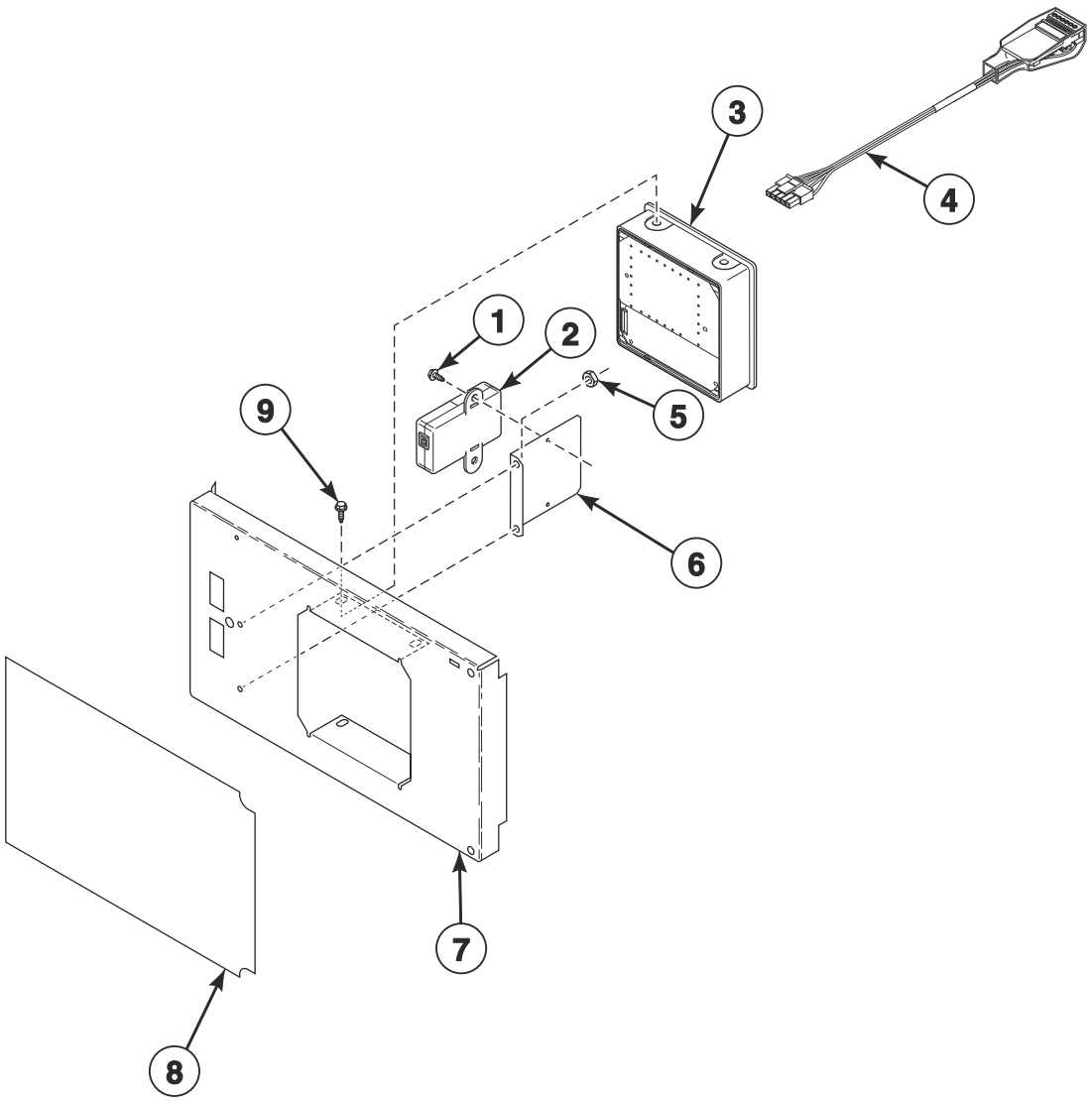

TMB3681P_70591801

© Copyright, Alliance Laundry Systems LLC – DO NOT COPY or TRANSMIT

3.5 Inch Graphical Control

REF	PART NO.	DESCRIPTION	COMMENTS
	F8617901	Harness	USB
1	33562	Screw	2 required
2	203440	USB-Serial Interface Assembly	
3	70543104	Control Assembly	
4	203361P	Machine ID Control Assembly	Model or serial number is required when ordering
5	44071201	Nut	2 required
6	70547001	USB Bracket	
7	70570201	Control Door and Studs Assembly	
8	70595401	Overlay	Design 3 models
	70639001	Overlay	Design 5 models
9	804608	Screw	4 required

© Copyright, Alliance Laundry Systems LLC – DO NOT COPY or TRANSMIT

Coin Drops

All Models Except NT and U Models

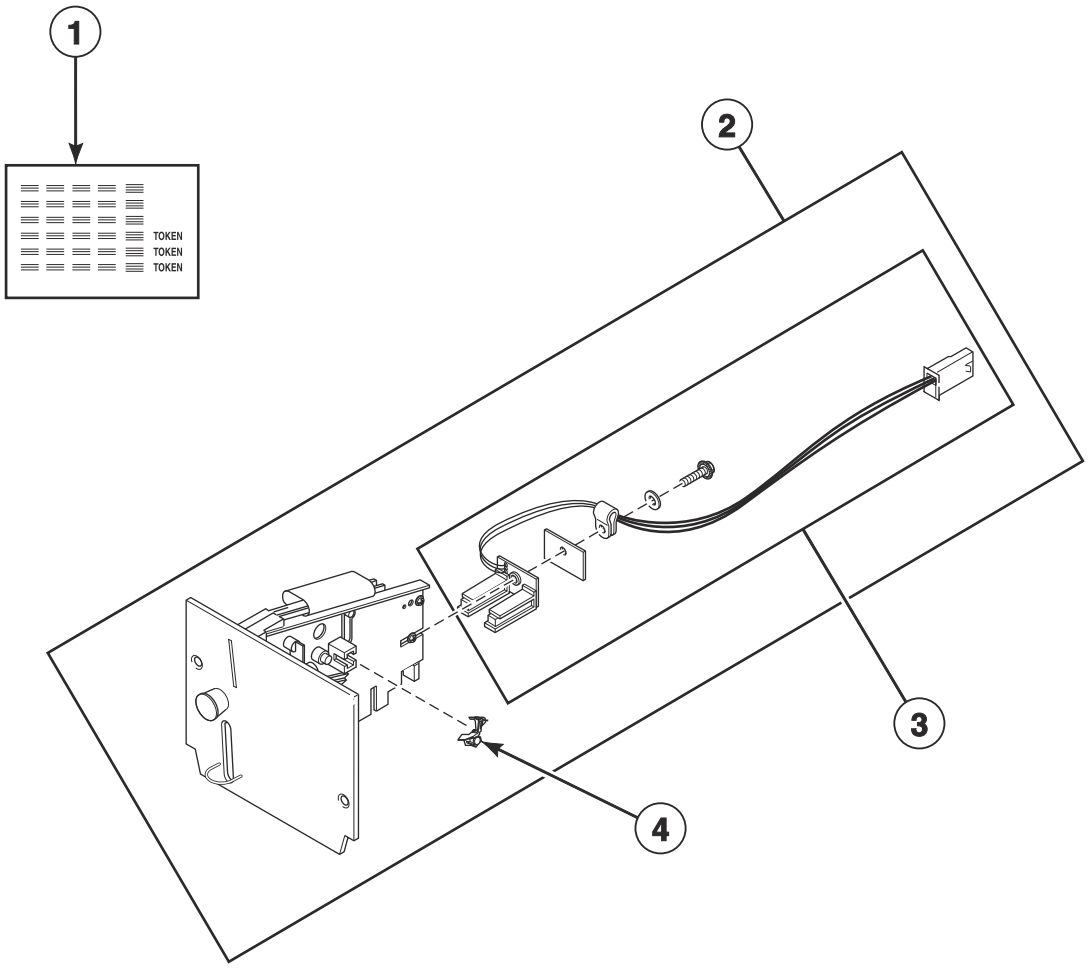

TMB3510P_70591801

© Copyright, Alliance Laundry Systems LLC – DO NOT COPY or TRANSMIT

Coin Drops

REF	PART NO.	DESCRIPTION	COMMENTS
1	38725	Coin Identification Paper	
2	70441601P	Coin Drop	Single; U.S.A.; $.25
	38475	Coin Drop Assembly	Single; Japan; 100 yen
	38464P	Coin Drop Assembly	Single; Canada; .25
	CK077	Coin Drop Kit	Single; Taiwan; 10 NT
	70506901	Coin Drop Assembly	Single; Singapore; $1.00 NEW
	70441603	Coin Drop	Dual; U.S.A.; $.25 and $1.00
	38519	Coin Drop Assembly	Dual; Japan; 100 yen and 500 yen
	70441602	Coin Drop Assembly	Dual; Canada; .25 and 1.00
	38467	Coin Drop Assembly	Dual; Australia; $0.20 and $1.00
	70447301	Coin Drop Assembly	Dual; Australia; $1.00 and $2.00
	70283102	Coin Drop Assembly	Dual; 0.20 and 0.50 Euro
	210195	Coin Drop Assembly	Dual; 0.20 and 1.00 Euro
	210196	Coin Drop Assembly	Dual; 0.50 and 1.00 Euro
	F0160737-00	Coin Meter	Dual; 0.50 and 2.00 Euro
	70281102	Coin Drop Assembly	Dual; Taiwan; 10 and 50 NT
	70482401	Coin Drop Assembly	Dual; New Zealand ; $1.00 and $2.00
	38462P	Coin Drop Assembly	Single; Token; STD 118-1
	38463	Coin Drop Assembly	Single; Token; STD 118-5
	38963P	Coin Drop	Single; Token STD 118-16
	CK097	Coin Drop Kit	Single; Jeton 08MS
	201141	Coin Drop Assembly	Single; Token; Jeton wh121
	70471601	Coin Drop Assembly	Single; Token; 7K
	70513302	Electronic Coin Drop Assembly	Euro and Great Britain coins
	70513310	Electronic Coin Drop Assembly	Japan and Thailand coins
	70513304	Electronic Coin Drop Assembly	Australia, New Zealand, Hong Kong and South Korea coins
	70513303	Electronic Coin Drop Assembly	Denmark, Norway and Euro coins
	70513306	Electronic Coin Drop Assembly	Mexico, Ecuador and U.S.A. coins
	70294107	Electronic Coin Drop Assembly	Lithuania, Latvia and Euro coins
	70513311	Electronic Coin Drop Assembly	China and Malaysia coins
	70513318	Electronic Coin Drop Assembly	South African 1, 2 and 5 rand coins
	70513309	Electronic Coin Drop Assembly	Euro coins
	70513312	Electronic Coin Drop Assembly	Russia coins
	70513313	Electronic Coin Drop Assembly	Phillipines coins
	70513314	Electronic Coin Drop Assembly	Thailand coins
	70513315	Electronic Coin Drop Assembly	Chile coins
	70513316	Electronic Coin Drop Assembly	Singapore coins
3	200674P	Opto Coupler	
4	201595P	Wire Guard	

© Copyright, Alliance Laundry Systems LLC – DO NOT COPY or TRANSMIT

Coin Drop Kits

All Models Except NT and U Models

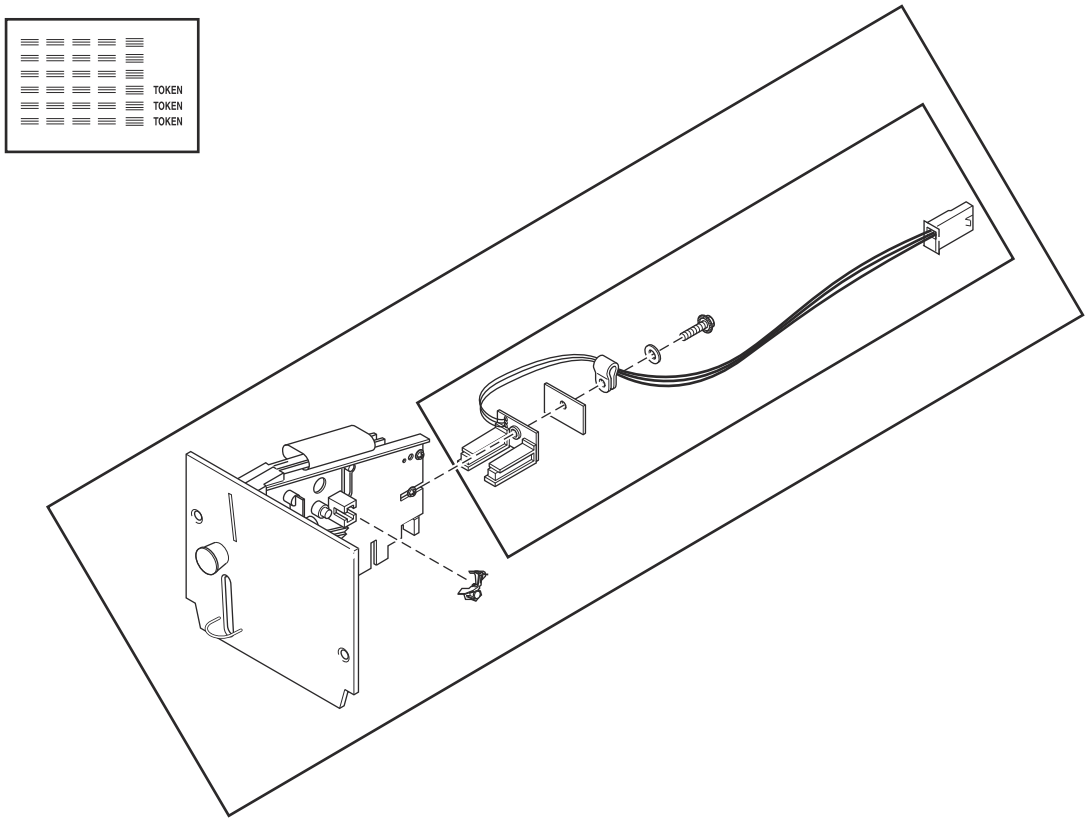

TMB3510PA_70591801

© Copyright, Alliance Laundry Systems LLC – DO NOT COPY or TRANSMIT

Coin Drop Kits

REF	PART NO.	DESCRIPTION	COMMENTS
	CK115	Electronic Coin Drop Kit	United States and Canada
	CK099	Electronic Coin Drop Kit	Australia (default), New Zealand, Hong Kong, South Korea and Malaysia
	CK100	Electronic Coin Drop Kit	United Kingdom (default) and Europe
	CK101	Electronic Coin Drop Kit	Europe (default), Denmark and Norway
	CK125	Electronic Coin Drop Kit	South Africa
	CK109	Electronic Coin Drop Kit	Euro
	CK110	Electronic Coin Drop Kit	Mexico (default), Ecuador and United States
	CK113	Electronic Coin Drop Kit	Japan and Taiwan
	CK116	Electronic Coin Drop Kit	Malaysia (default) and China
	CK117	Electronic Coin Drop Kit	Russia
	CK118	Electronic Coin Drop Kit	Philippine
	CK119	Electronic Coin Drop Kit	Thailand
	CK120	Electronic Coin Drop Kit	Chile
	CK121	Electronic Coin Drop Kit	Singapore
	CK122	Coin Drop Kit	New Zealand; 1.00 and 2.00

© Copyright, Alliance Laundry Systems LLC – DO NOT COPY or TRANSMIT

Network Board, Central Pay and Card Reader Components

All Models Except NT Models; Central Pay Starting December 2018

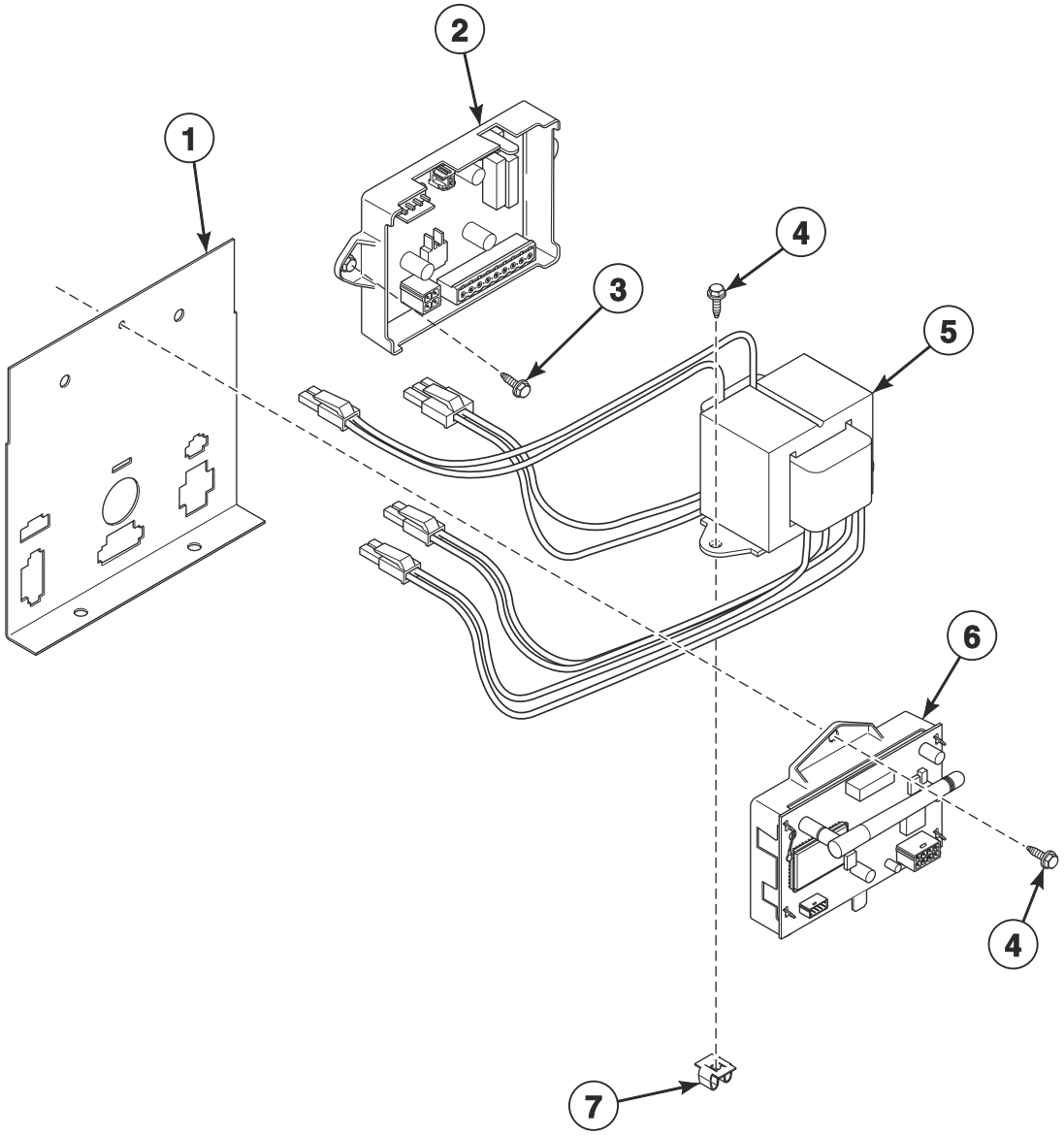

TMB3689P_70591801

© Copyright, Alliance Laundry Systems LLC – DO NOT COPY or TRANSMIT

Network Board, Central Pay and Card Reader Components

REF	PART NO.	DESCRIPTION	COMMENTS
	70596301	Wireless Network Kit	H and U models through 1/31/19; S models through 5/12/19
	70609701	Wireless Network Kit	H models starting 2/1/19; S models starting 5/13/19
	F8536002	Wireless Network Board Harness	H and U models through 1/31/19; S models through 5/12/19
	F8613201	FCC-IC Label	HT and U models through 1/31/19; ST models through 5/12/19
	F8674006	Wireless Network Harness	H models starting 2/1/19; S models starting 5/13/19
	204692	Wireless Control Label	H models starting 2/1/19; S models starting 5/13/19
	NK320	Ethernet Gateway Kit	S models through 5/12/19
	NK330	USB Gateway Kit	S models through 5/12/19
	203346	USB IR Interface Kit	
	70666806	Fob Reader Kit	
	44355602	Central Pay Harness	Routes from central pay board to contol tray
	44272301	Transformer Harness	100-120 Volt; Routes from transformer to I/O Control Assembly; Card and central pay
	44272302	Transformer Harness	200-480 Volt; Routes from transformer to I/O Control Assembly; Card and central pay
	44355604	Central Pay Board Harness	Routes from central pay board to transformer
	44355605	Central Pay Harness	Routes from central pay board to front end control
1	70307007	Harness Mounting Plate	
2	44359001	Central Pay Kit	100-120 Volt
	44359003	Central Pay Kit	200-480 Volt
3	51780	Screw	2 required
4	F8206901	Screw	
5	202757	Transformer	100-120 Volt; Card and central pay
	202758	Transformer	200-480 Volt; Card and central pay
6	203532	Wireless Network Control Assembly	H and U models through 1/31/19; S models through 5/12/19
	807211	Wireless Network Control Assembly	H models starting 2/1/19; S models starting 5/13/19
7	70030501	Expansion Clip	2 required

© Copyright, Alliance Laundry Systems LLC – DO NOT COPY or TRANSMIT

Emergency Stop Button - OPL Models

A, H, J, K, R and U in the 2nd Position
G and T in the 2nd Position Through 12/31/18

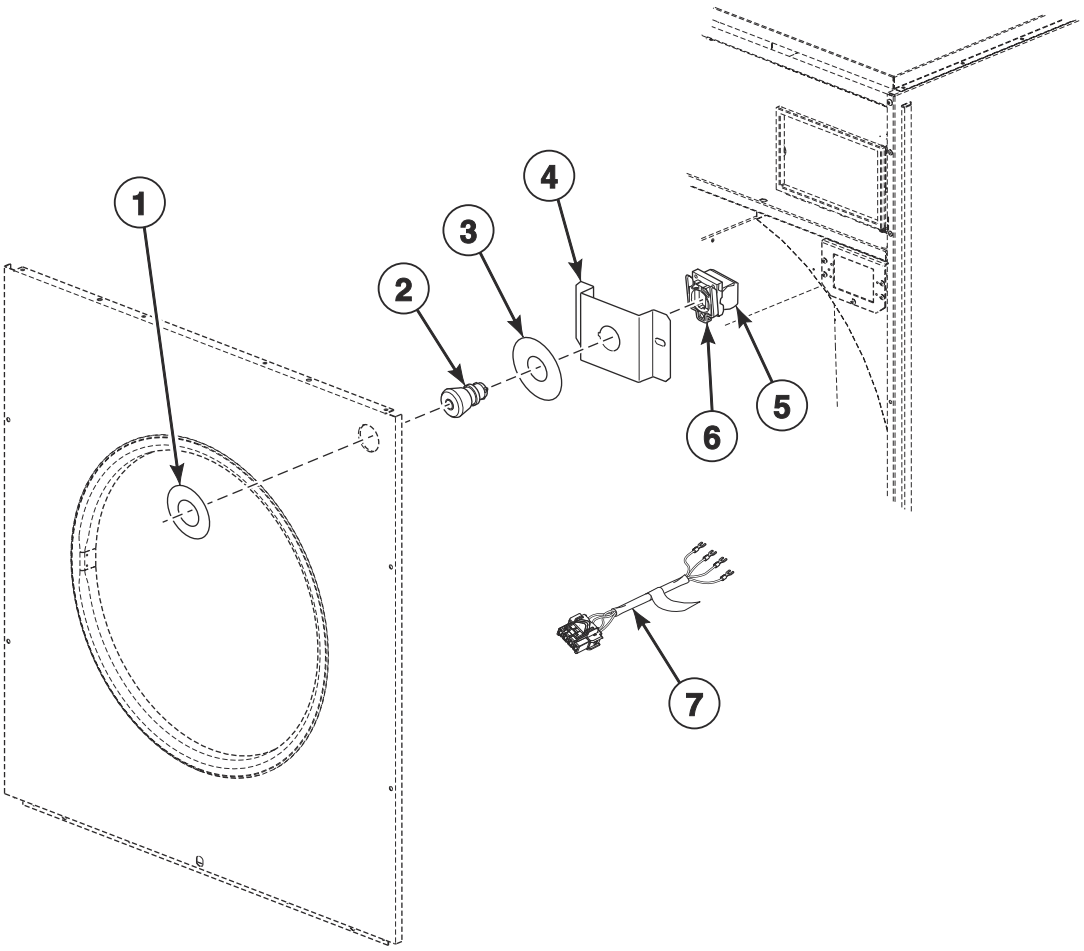

TMB3513P_70591801

© Copyright, Alliance Laundry Systems LLC – DO NOT COPY or TRANSMIT

Emergency Stop Button - OPL Models

REF	PART NO.	DESCRIPTION	COMMENTS
	70580301	Emergency Stop Button Kit	Includes items 2-4
	F8519403	Emergency Stop Bypass Harness	Coin, card and central pay
	44272106	Emergency Stop Interconnect Harness	
1	44012903	Emergency Stop Label	
2	F200233500	Emergency Stop Pushbutton	
3	44012901	Emergency Stop Label	
4	70550401	Emergency Stop Mounting Bracket	
5	F8069501	Contact Switch	2 required
6	F8538101	Contact Base	
7	44272401	Emergency Stop Harness	

© Copyright, Alliance Laundry Systems LLC – DO NOT COPY or TRANSMIT

Cabinet Front Components

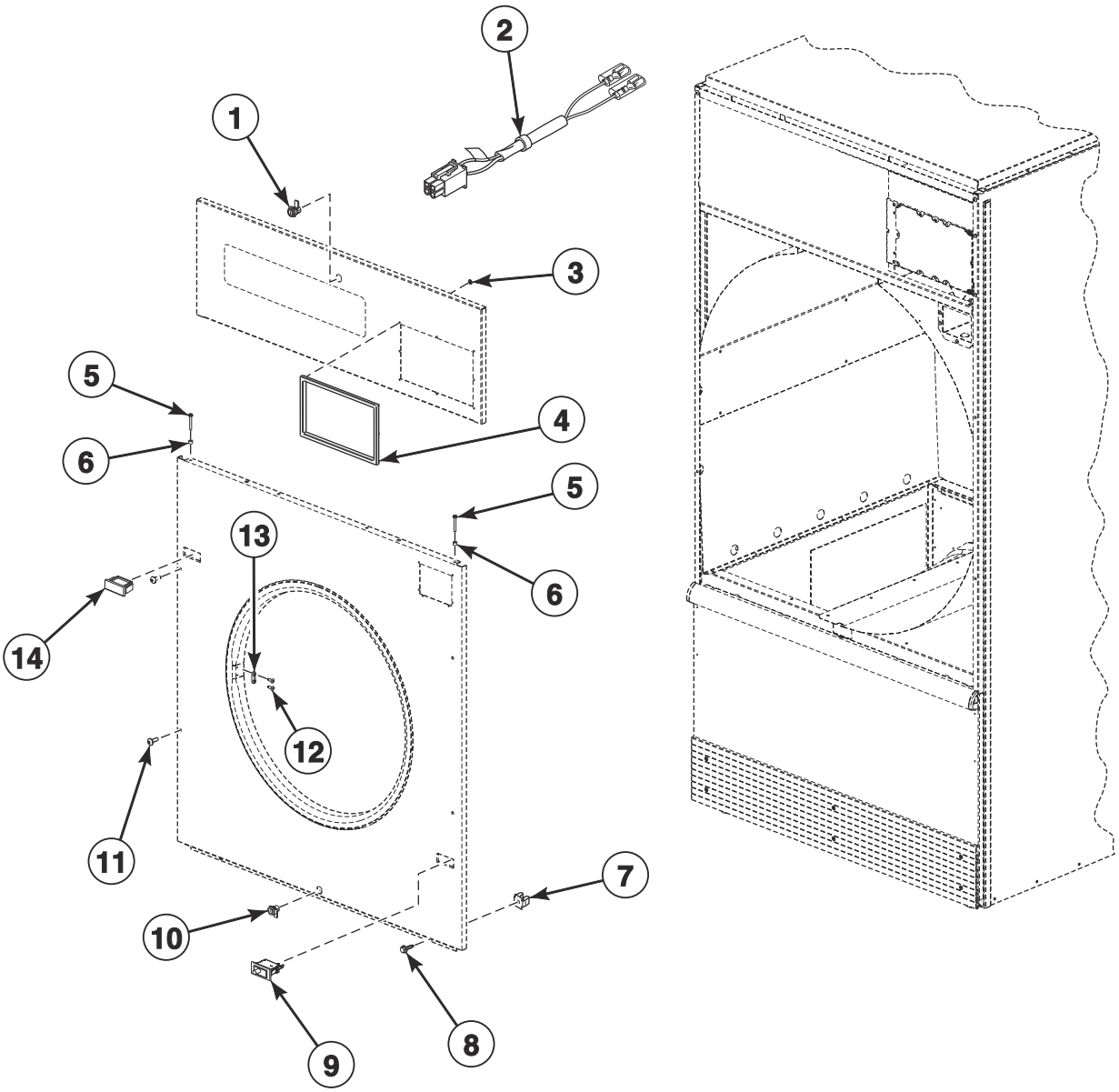

TMB3538P_70591801

© Copyright, Alliance Laundry Systems LLC – DO NOT COPY or TRANSMIT

Cabinet Front Components

REF	PART NO.	DESCRIPTION	COMMENTS
	M4379P4	Tumbler Dolly Kit	
	D511476	Jumper Harness	Card reader present
	44335202	Door Switch Harness	
	44334103	Bypass Harness	Card and central pay
	70482901	Door Catch Kit	
1	70733701	Lock, Key and Nut Kit	RL001 key code; Black; Control panel; Optional if same key is to be used for control lock
	70155601	Key	RL001
	44089304	Panel Lock	RL001; Chrome
2	44334101	Coin Vault Switch Harness	
3	M400977	Nut	8 required per control trim
4	70529401	Control Trim	H models
	44016401	Control Trim	G, K, M, N and P models; Design 3 S models; Black
5	70275801	Screw	4 required
6	56079	Panel Locator	2 required
7	70030501	Expansion Clip	
8	M411072	Screw	4 required; Front panel; Bottom
9	70413301	Pushbutton Switch	Door switch
10	70733701	Lock, Key and Nut Kit	RL001 key code; Black; Lint panel; Optional if same key is to be used for control lock
	70155601	Key	RL001
	44089302P	Lock, Key and Nut Kit	RL002 key code; Lint panel; Standard coin and card models
	70155602	Key	RL002
	44089305	Panel Lock	RL002; Chrome
11	70033502	Screw	2 required for stainless steel panels in addition to 2 of 70182601 Screw
	70182601	Screw	2 required for stainless steel panels in addition to 2 of 70033502 Screw; 4 required for painted panels
12	M400003	Pop Rivet	2 per door latch
13	M401223	Door Latch	2 required
14	44057801W	Switch Hole Plug	White; Design 3 models
	44057801Q	Switch Hole Plug	Bisque; Design 3 models
	44057801B	Switch Hole Plug	Black; For stainless steel; Design 3 models
	44057801LG	Switch Hole Plug	Light gray; Design 3 models

© Copyright, Alliance Laundry Systems LLC – DO NOT COPY or TRANSMIT

Cabinet Panels and Nameplates

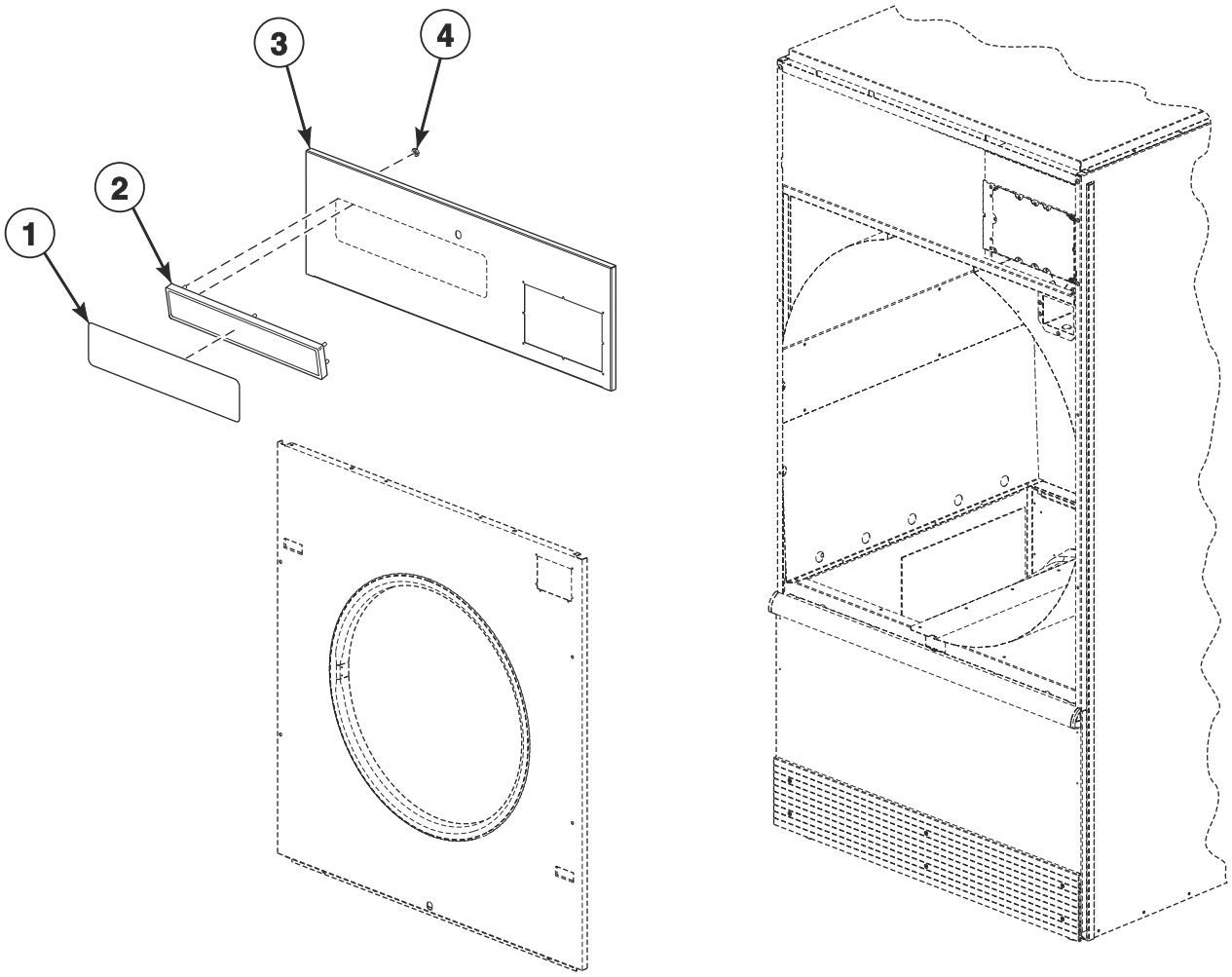

TMB3539P_70591801

© Copyright, Alliance Laundry Systems LLC – DO NOT COPY or TRANSMIT

Cabinet Panels and Nameplates

REF	PART NO.	DESCRIPTION	COMMENTS
1	44010601	Nameplate	S models; Design 3
	F8688901	Nameplate	S models; Design 5
	F8688001	Nameplate	H models; Design 5
	F8443106	Nameplate	U models
	70541801	Nameplate	B models
	567887	Nameplate	P models
	70410201	Nameplate Overlay	G models; OPL
	70411401	Nameplate Overlay	G models; Coin
	44130301	Nameplate Overlay	K models; OPL
	44144401	Nameplate Overlay	K models; Coin
2	70117401	Nameplate Bezel	S models; Design 3
3	44040008B	Control Panel	B models
	44040005*	Control Panel	G, K and U models; Only white available for Design 5
	44040013	Control Panel	G and K models; Design 5 U models; Stainless steel
	44000122*	Control Panel	H, M, N and S models; P models with white front panel; Only white available for Design 5
	44000125	Control Panel	H and M models; P models with white front panel; Design 3 S models; Stainless steel
	44040015LG	Control Panel	U models; Light gray
	44040014	Control Panel	U models; Stainless steel; Design 3
	44040011*	Control Panel	U models
	44000130DG	Control Panel	P models; Dark gray
4	M400977	Nut	S models; 6 required; Design 3

*** Add Letter To Designate Color. Q - Bisque W - White**

© Copyright, Alliance Laundry Systems LLC – DO NOT COPY or TRANSMIT

Cabinet Panels and Nameplates - Design 5 S Models

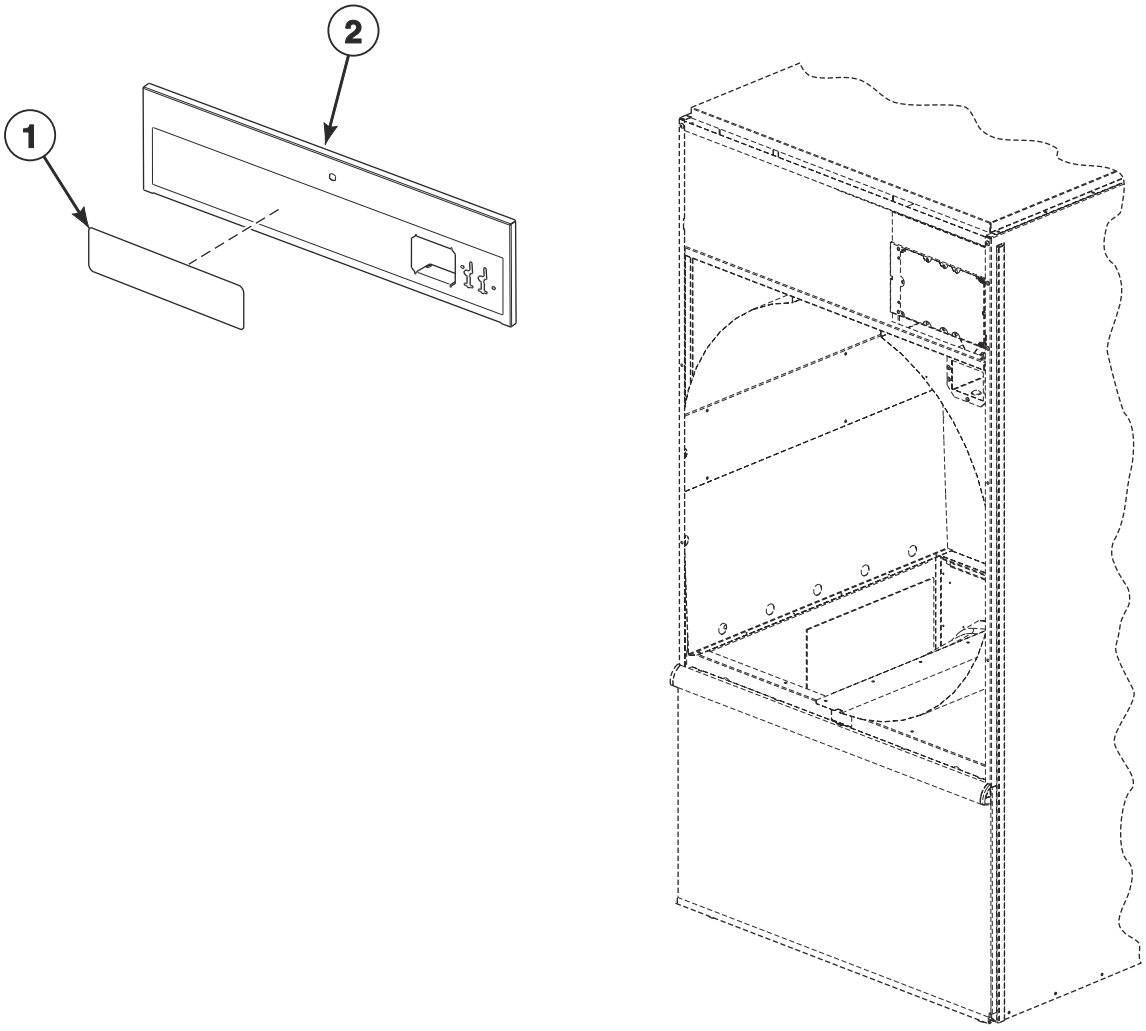

TMB3814P_70591801

© Copyright, Alliance Laundry Systems LLC – DO NOT COPY or TRANSMIT

Cabinet Panels and Nameplates - Design 5 S Models

REF	PART NO.	DESCRIPTION	COMMENTS
	F8521303	Lanyard Cable	
1	F8688901	Nameplate	
2	44368001	Control Panel	Stainless steel; Coin
	44368002	Control Panel	Stainless steel; Card
	44367103	Control Panel	Stainless steel; OPL
	44368003W	Control Panel	Coin
	44368004W	Control Panel	Card
	44367106W	Control Panel	OPL

© Copyright, Alliance Laundry Systems LLC – DO NOT COPY or TRANSMIT

Front Panel Assemblies - Design 3 Models

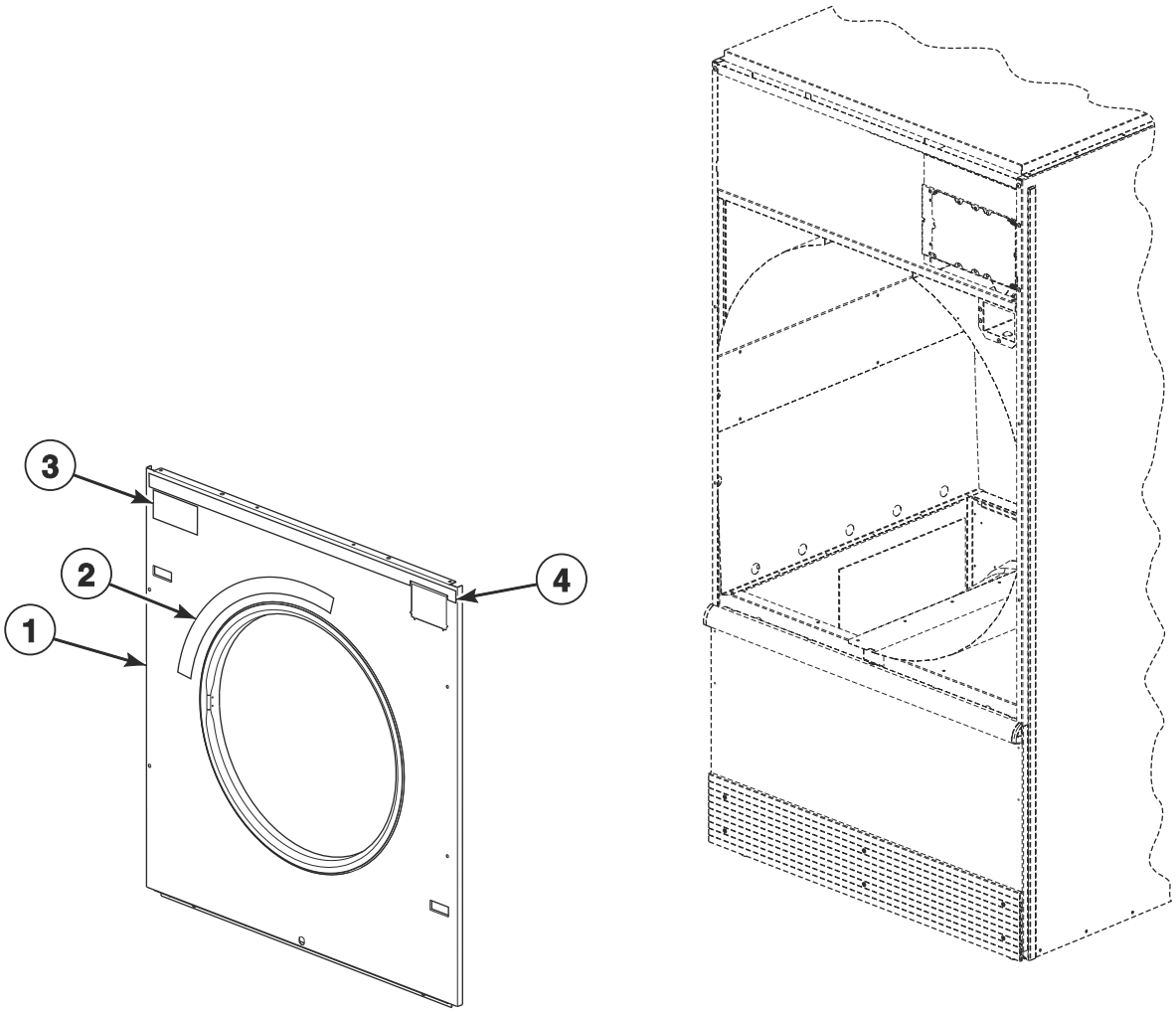

TMB3540P_70591801

© Copyright, Alliance Laundry Systems LLC – DO NOT COPY or TRANSMIT

Front Panel Assemblies - Design 3 Models

REF	PART NO.	DESCRIPTION	COMMENTS
1	44052525*	Front Panel	All Models Except NT Models; Coin
	44052527	Front Panel	All Models Except NT Models; Coin; Stainless steel
	44052526DG	Front Panel	P models; Coin; Dark gray
	44052520W	Front Panel	All Models Except NT Models; Card and central pay
	44052522	Front Panel	All Models Except NT Models; Card and central pay; Stainless steel
	44052520DG	Front Panel	P models; Card; Dark gray
	44052530W	Front Panel	OPL; With e-stop
	44052529	Front Panel	OPL; Stainless steel; With e-stop
	44052530LG	Front Panel	U models; OPL; Light gray; With e-stop
	44052530DG	Front Panel	P models; OPL; Dark gray; With e-stop
	44077905WP	Front Panel Assembly	OPL; Without e-stop
	44077919	Front Panel Assembly	OPL; Stainless steel; Without e-stop
	44052517LG	Front Panel	U models; OPL; Light gray; Without e-stop
	44052517DG	Front Panel	P models; OPL; Dark gray; Without e-stop
2	70534401	Warning Label	English
	70534402	Warning Label	French
	70534405	Warning Label	Colombian Spanish
	70534400	Label Kit	Warning; IEC models
3	70537101	Label	G and K models; F.S.S.
	44190901	Label	P models; Safe Tech
	70537001	Label	B, H, M, N, S and U models; C.A.R.E.
4	70399402	Access Panel Trim	G and K models

*** Add Letter To Designate Color. Q - Bisque W - White**

© Copyright, Alliance Laundry Systems LLC – DO NOT COPY or TRANSMIT

Front Panel Assemblies - Design 5 Models

H, S and U Models

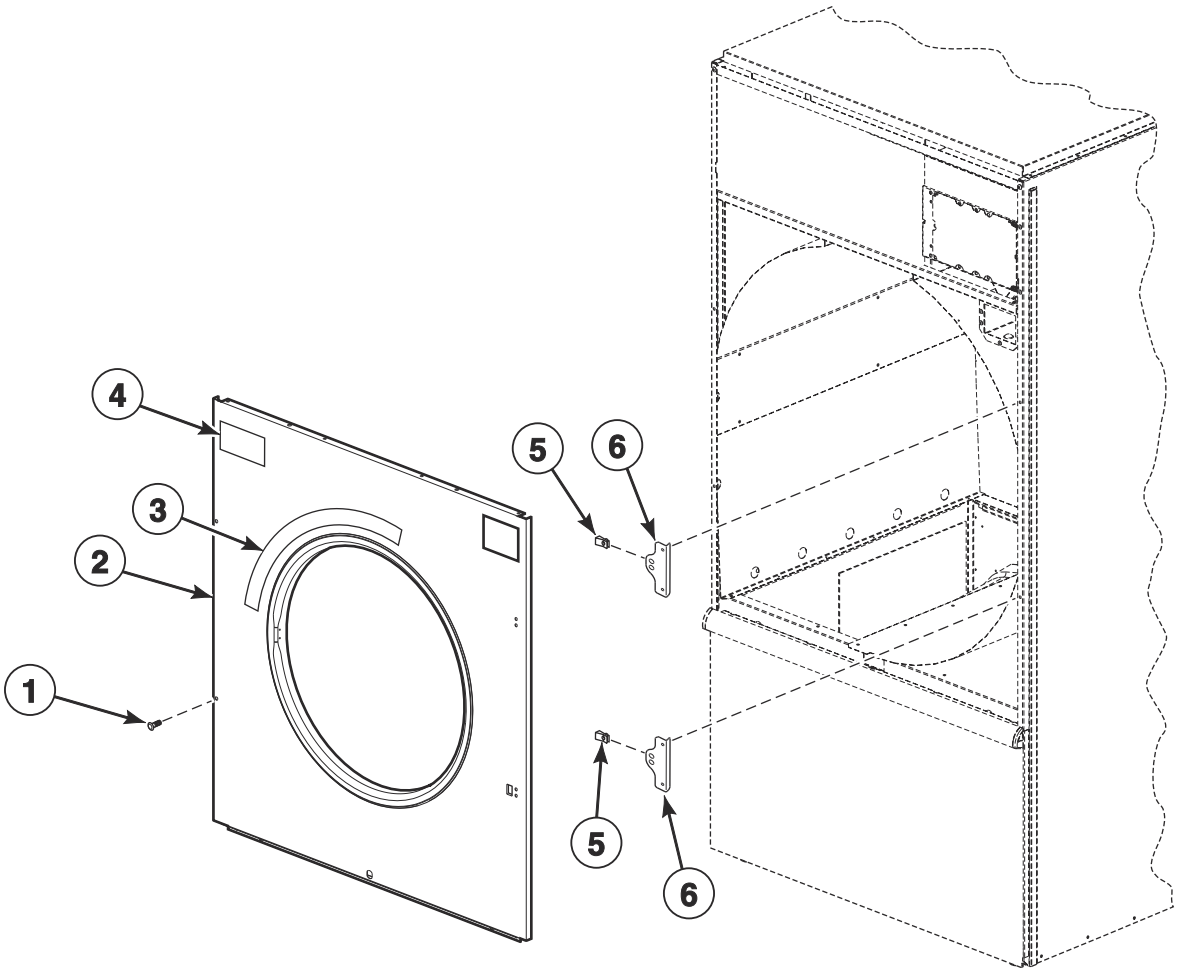

TMB3815P_70591801

© Copyright, Alliance Laundry Systems LLC – DO NOT COPY or TRANSMIT

Front Panel Assemblies - Design 5 Models

REF	PART NO.	DESCRIPTION	COMMENTS
	70058501	Pop Rivet	Use to attach item 6
1	70182601	Screw	
2	44367403	Front Panel	Stainless steel; Coin
	44367406	Front Panel	Stainless steel; Card and central pay
	44367409	Front Panel	Stainless steel; OPL
	44367408LG	Front Panel	U models; Light gray; OPL
	44367401W	Front Panel	Coin
	44367405W	Front Panel	Card and central pay
	44367407W	Front Panel	OPL
3	70534401	Warning Label	English
	70534402	Warning Label	French
	70534405	Warning Label	Colombian Spanish
4	70537001	Label	C.A.R.E.
5	70030401	Nut	
6	70634301	Lug Mount Bracket	

© Copyright, Alliance Laundry Systems LLC – DO NOT COPY or TRANSMIT

Lower Cabinet Front Components

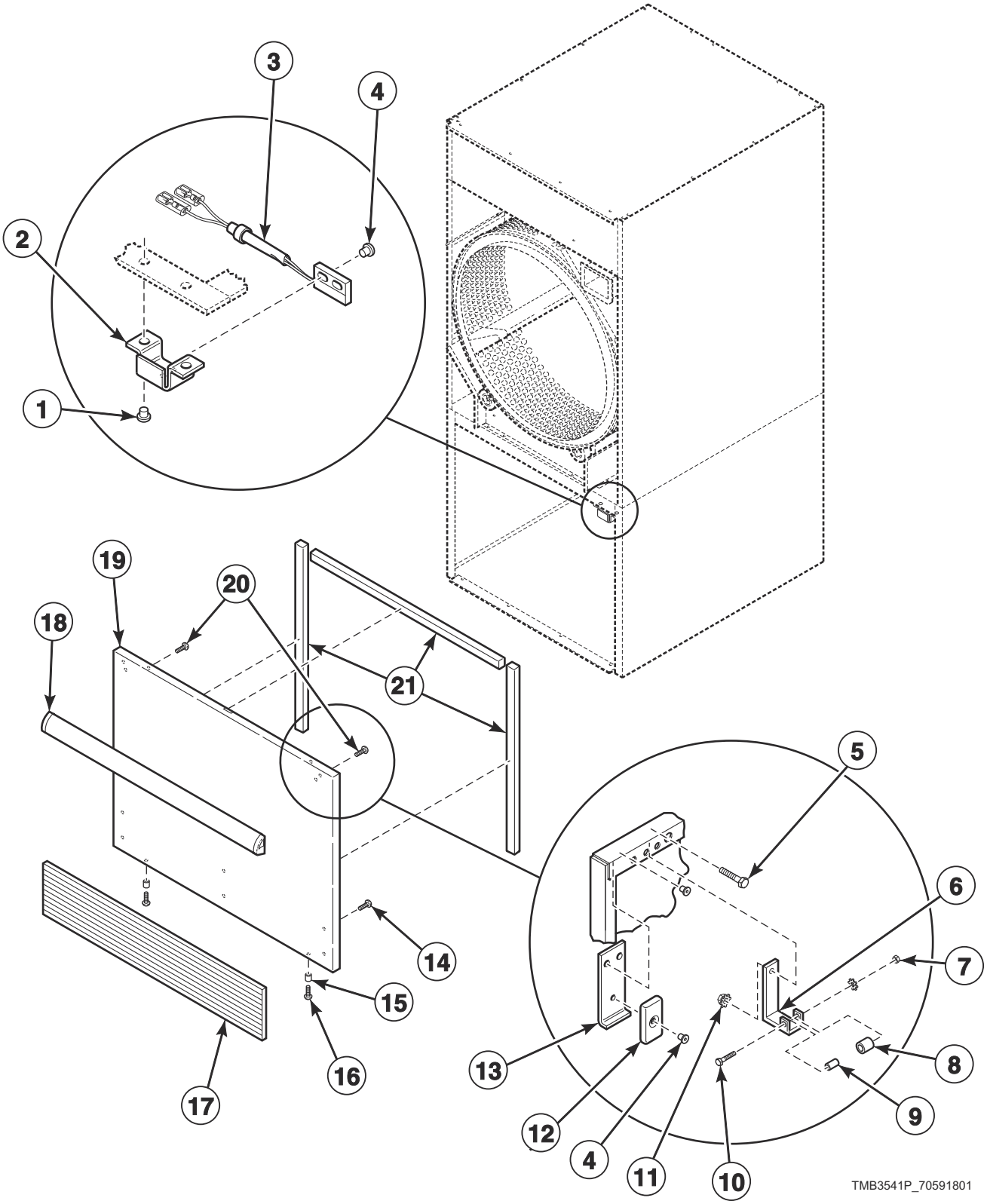

© Copyright, Alliance Laundry Systems LLC – DO NOT COPY or TRANSMIT

Lower Cabinet Front Components

REF	PART NO.	DESCRIPTION	COMMENTS
	70404001	Roller Bracket Assembly	Includes items 6-10
1	70058501	Pop Rivet	
2	44296101	Switch Bracket	
3	F8066804	Reed Switch Assembly	
4	70743501	Rivet	
5	70132301	Screw	Attaching roller catch
6	70030301	Roller Catch Arm	
7	23951	Nut	
8	70297601	Roller Catch Wheel	
9	70030201	Roller Catch Spacer	
10	70072801	Screw	
11	51236	Nut	Attaching roller catch
12	70343101	Magnet	
13	44290501	Magnet Bracket	
14	70126301	Pop Rivet	For attaching kickplate; Black; 6 required
	70126401	Pop Rivet	For attaching kickplate; Gray; 6 required
15	56079	Panel Locator	
16	39733	Screw	
17	70117619	Kickplate	H and U models; Gray; Design 3
	70117607	Kickplate	All models except H models; Black; Design 3
18	70154405P	Handle and Caps Assembly	B, M, N, S and U models; P models with white and stainless steel front panel; Black; Includes endcaps
	70407210	Handle Bumper	P models
	70154415	Handle and Caps Assembly	H and U models; Gray; Includes endcaps
	70407202	Handle Bumper	G and K models; Black and blue; Does not include endcaps
19	44293603W	Lint Panel	Design 3 models
	44293604DG	Lint Panel	P models; Dark gray; No kickplate
	44293603LG	Lint Panel	Design 3 U models; Light gray
	44293602	Lint Panel	B, H, K, M, S and U models; Design 3; Stainless steel
	44293605	Lint Panel	P models; Design 5 H, S and U models; Stainless steel; No kickplate
	44293604LG	Lint Panel	Design 5 U models; Light gray; No kickplate
	44293604W	Lint Panel	Design 5 H, S and U models; No kickplate
20	430757	Screw	
21	70289101P	Gasket	Sold per foot

*** Add Letter To Designate Color. Q - Bisque W - White**

© Copyright, Alliance Laundry Systems LLC – DO NOT COPY or TRANSMIT

Lint Panel Components

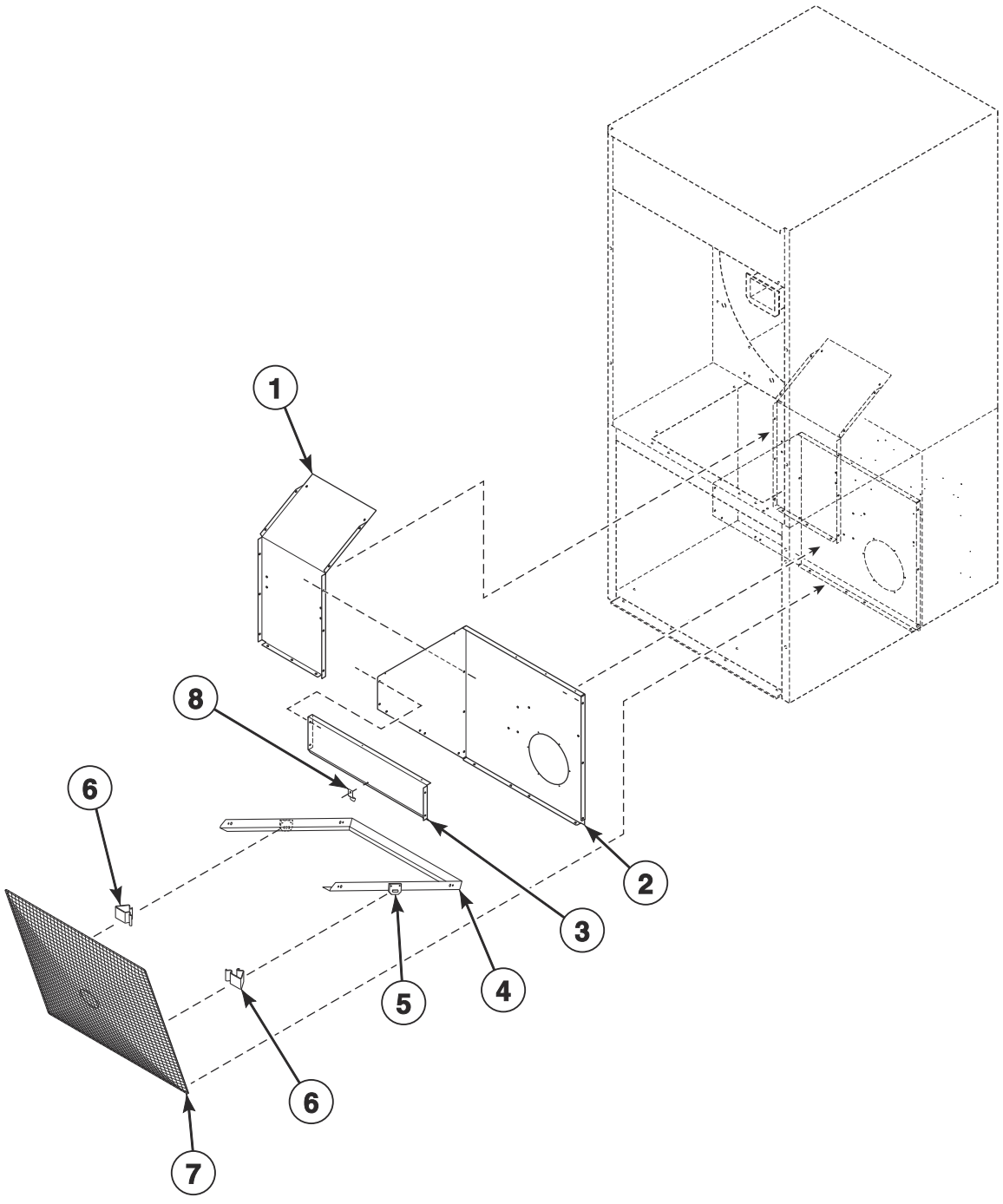

TMB3637P_70591801

© Copyright, Alliance Laundry Systems LLC – DO NOT COPY or TRANSMIT

Lint Panel Components

REF	PART NO.	DESCRIPTION	COMMENTS
1	44298102	Lint Panel	Left
2	44300901	Lint Panel	Right
3	44298901	Lint Screen Top Rail	
4	44325301	Lint Bracket	
5	44140202	Lint Clip Bracket	2 required
6	35865	Hold-Down Clip	2 required
7	44063601	Lint Screen	
8	H96418413	Lint Screen Clip	

© Copyright, Alliance Laundry Systems LLC – DO NOT COPY or TRANSMIT

Cabinet Components

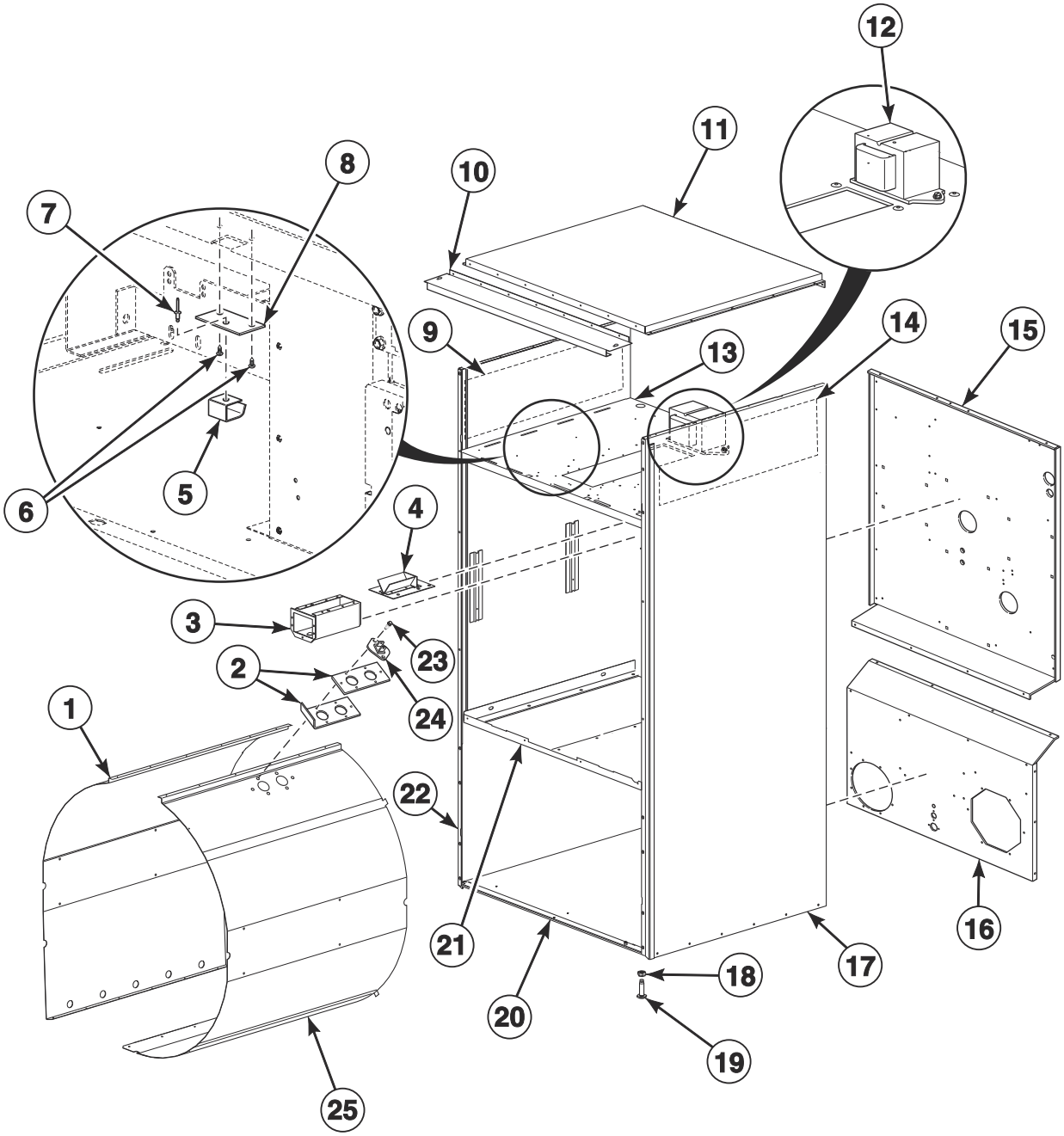

TMB3638P_70591801

© Copyright, Alliance Laundry Systems LLC – DO NOT COPY or TRANSMIT

Cabinet Components

REF	PART NO.	DESCRIPTION	COMMENTS
	298P4P	Spray Paint	White
	122P4P	Porcelain Touch-Up Paint	White
	370P4P	Porcelain Touch-Up Paint	Bisque
	70058501	Pop Rivet	Use with items 17 and 22
	430497	Screw	Use with items 17 and 22
	44334103	Bypass Harness	Coin vault switch
	44334101	Coin Vault Switch Harness	
	44272301	Transformer Harness	120 Volt; Use with item 12
	44272302	Transformer Harness	240 Volt; Use with item 12
1	44304601	Baffle	Left
2	44068101	Thermistor Plate	
	44068102	Thermistor Plate	Use as a shim
3	70529501	Coin Vault Assembly	
	70529502	Coin Vault and Emergency Stop Mount Assembly	Models with emergency stop
	F160673	Coin Box	Optional equipment; Includes lock and key
4	70296401	Coin Chute Assembly	Wide
5	431318	Control Door Latch	
6	431287	Screw	
7	M400003	Pop Rivet	
8	44003201	Latch Mounting Bracket	
9	44150102	Insulation	
10	44368201	Top Panel Bracket	Gas and electric models
11	44135001P	Top Cover Pan	Gas and electric models
	44139301	Top Cover	Steam models
12	202757	Transformer	120 Volt
	202758	Transformer	240 Volt
13	44304101	Top Pan	
14	44150103	Insulation	
15	44297001	Upper Rear Panel	
16	44300001	Lower Rear Panel	
17	44304401DG	Side Panel	P models; Right; Dark gray
	44304401*	Side Panel	All models except P models; Design 3; Right
	44304401LG	Side Panel	Design 3 U models; Right; Light gray
	44367601LG	Side Panel	Design 5 U models; Right; Light gray
	44367601W	Side Panel	Design 5 H, S and U models; Right
18	21899	Nut	Right
19	70247701	Screw	Leveling leg
20	44304301	Bottom Pan	
21	44304201	Center Pan	
22	44304501DG	Side Panel	P models; Left; Dark gray
	44304501*	Side Panel	All models except P models; Design 3; Left
	44304501LG	Side Panel	Design 3 U models; Left; Light gray
	44367501LG	Side Panel	Design 5 U models; Left; Light gray
	44367501W	Side Panel	Design 5 H, S and U models; Left
23	51780	Screw	
24	44064701	Thermistor	
25	44304702	Baffle	Right
	44304701	Baffle	Right with fire suppression system

*** Add Letter To Designate Color. Q - Bisque W - White**

© Copyright, Alliance Laundry Systems LLC – DO NOT COPY or TRANSMIT

Rear Panel and Belt Guard Components

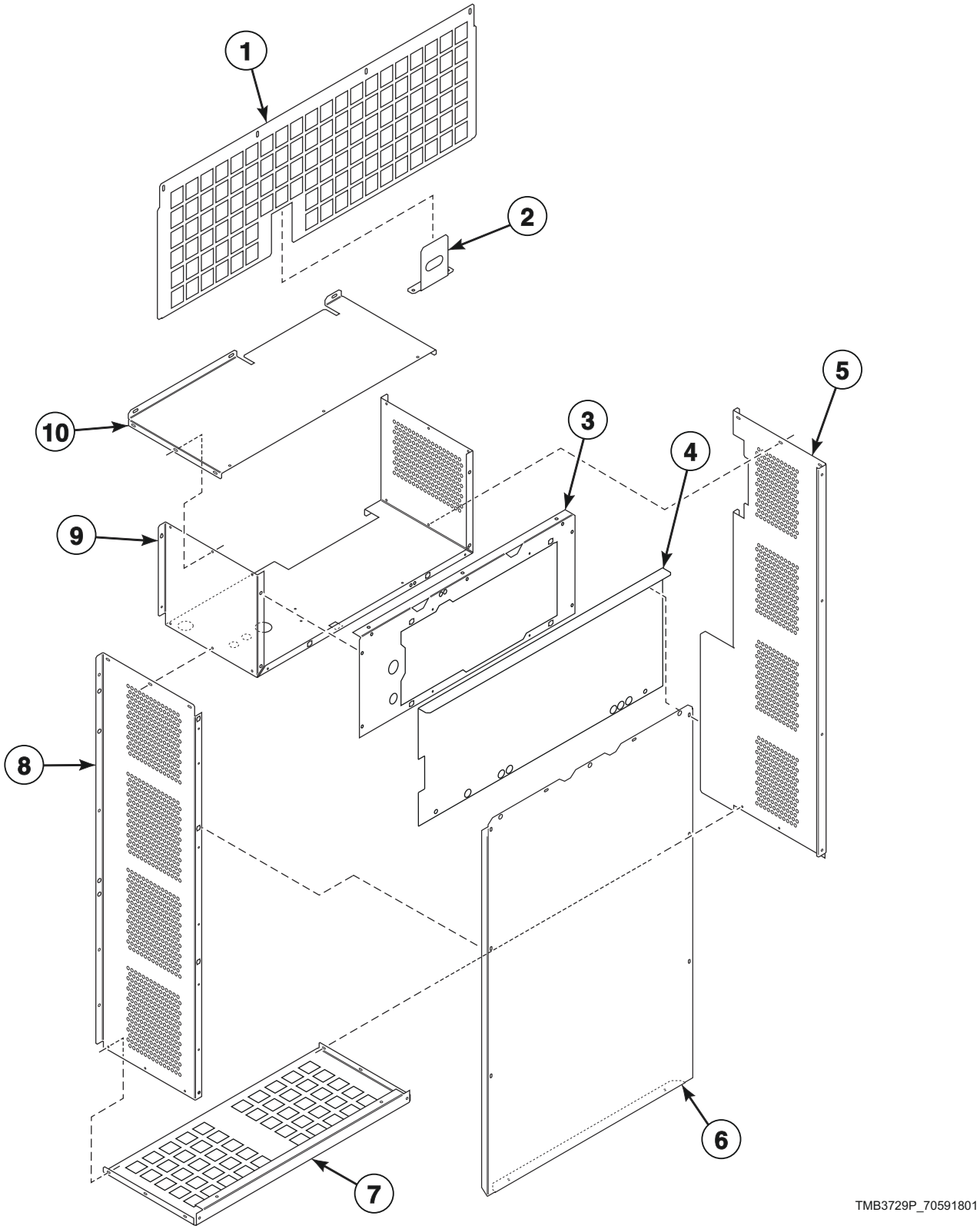

© Copyright, Alliance Laundry Systems LLC – DO NOT COPY or TRANSMIT

Rear Panel and Belt Guard Components

REF	PART NO.	DESCRIPTION	COMMENTS
1	44300301	Stove Grate	Gas models
	44300302	Stove Grate	Steam models
	44305601	Stove Grate	Electric models
2	44327601	Pipe Bracket	Gas models
3	44332201	Belt Guard	Middle
4	70507501	Control Tray Cover	
5	44298301	Belt Guard Side Panel	Left
6	44269201	Guard Panel	Rear
	44269202	Guard Panel	Rear with fire suppression system
7	44298401	Belt Guard	Bottom
8	44301101	Belt Guard Side Panel	Right
9	44332301	Guard Panel	Middle
10	44314301	Belt Guard	Top

© Copyright, Alliance Laundry Systems LLC – DO NOT COPY or TRANSMIT

Door Assemblies

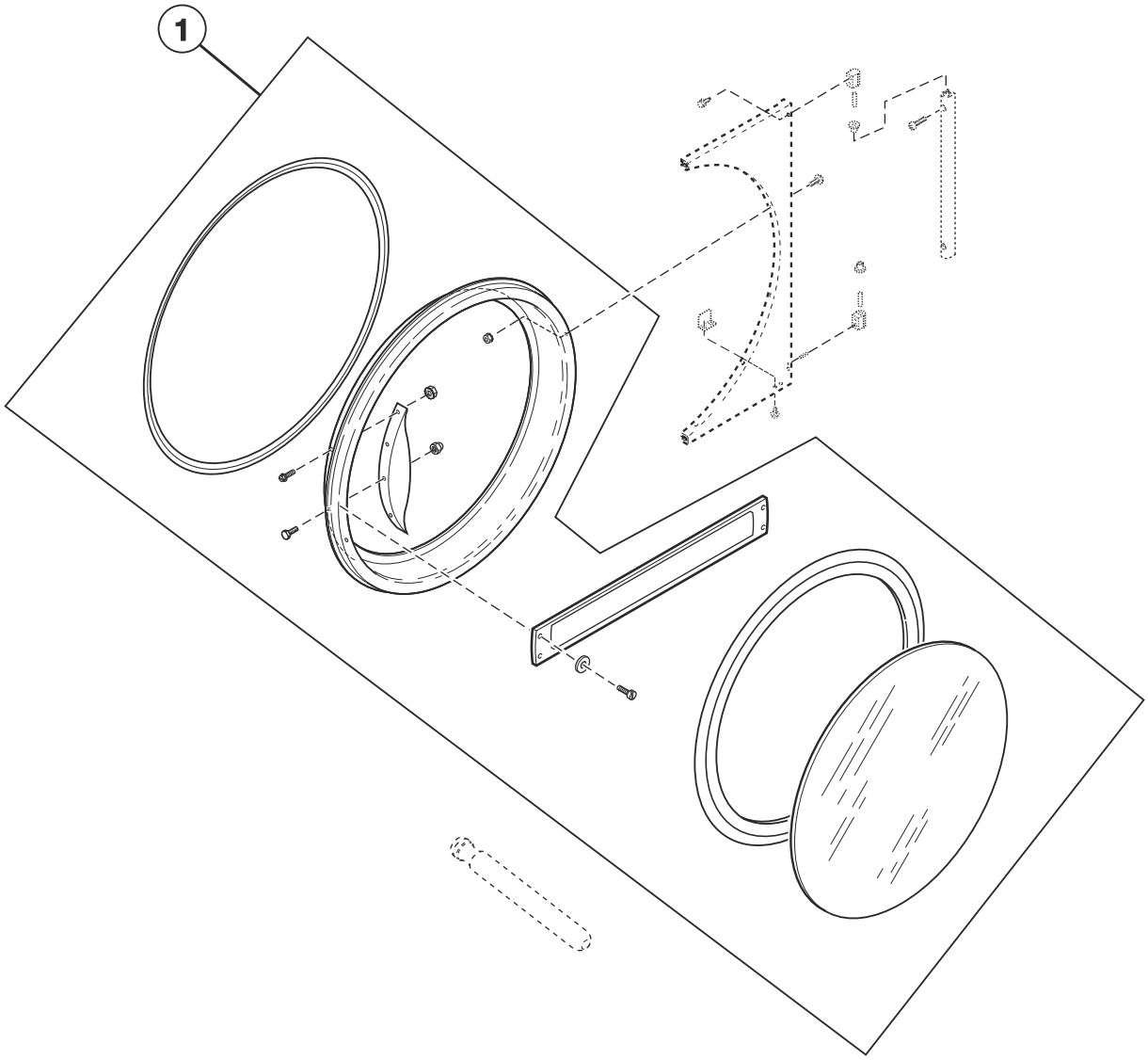

TMB3152P_70591801

© Copyright, Alliance Laundry Systems LLC – DO NOT COPY or TRANSMIT

Door Assemblies

REF	PART NO.	DESCRIPTION	COMMENTS
1	44028906P	Door Assembly	M models; Design 3 S models; Stainless steel
	44354701	Door Assembly	S models; Stainless steel; Design 5
	44028908	Door Assembly	M models; Design 3 S models; Chrome
	44354702	Door Assembly	S models; Chrome; Design 5
	44266701P	Door Assembly	U models; Stainless steel; Design 3
	44354703	Door Assembly	U models; Stainless steel; Design 5
	44266702P	Door Assembly	U models; Chrome; Design 3
	44354704	Door Assembly	U models; Chrome; Design 5
	44058105P	Door Assembly	H models; Stainless steel; Design 3
	44354705	Door Assembly	H models; Stainless steel; Design 5
	44058107P	Door Assembly	H models; Stainless steel with green trim; Design 3
	44354707	Door Assembly	H models; Stainless steel with green trim; Design 5
	44058106P	Door Assembly	H models; Chrome; Design 3
	44354706	Door Assembly	H models; Chrome; Design 5
	44058108	Door Assembly	H models; Chrome with green trim; Design 3
	44354708	Door Assembly	H models; Chrome with green trim; Design 5
	44028907P	Door Assembly	B and N models
	44292302LGP	Door Assembly	P models; Light gray
	44292302B	Door Assembly	P models; Use with stainless steel front panel
	70407402P	Door Assembly	G and K models; Includes handle

© Copyright, Alliance Laundry Systems LLC – DO NOT COPY or TRANSMIT

Door Components

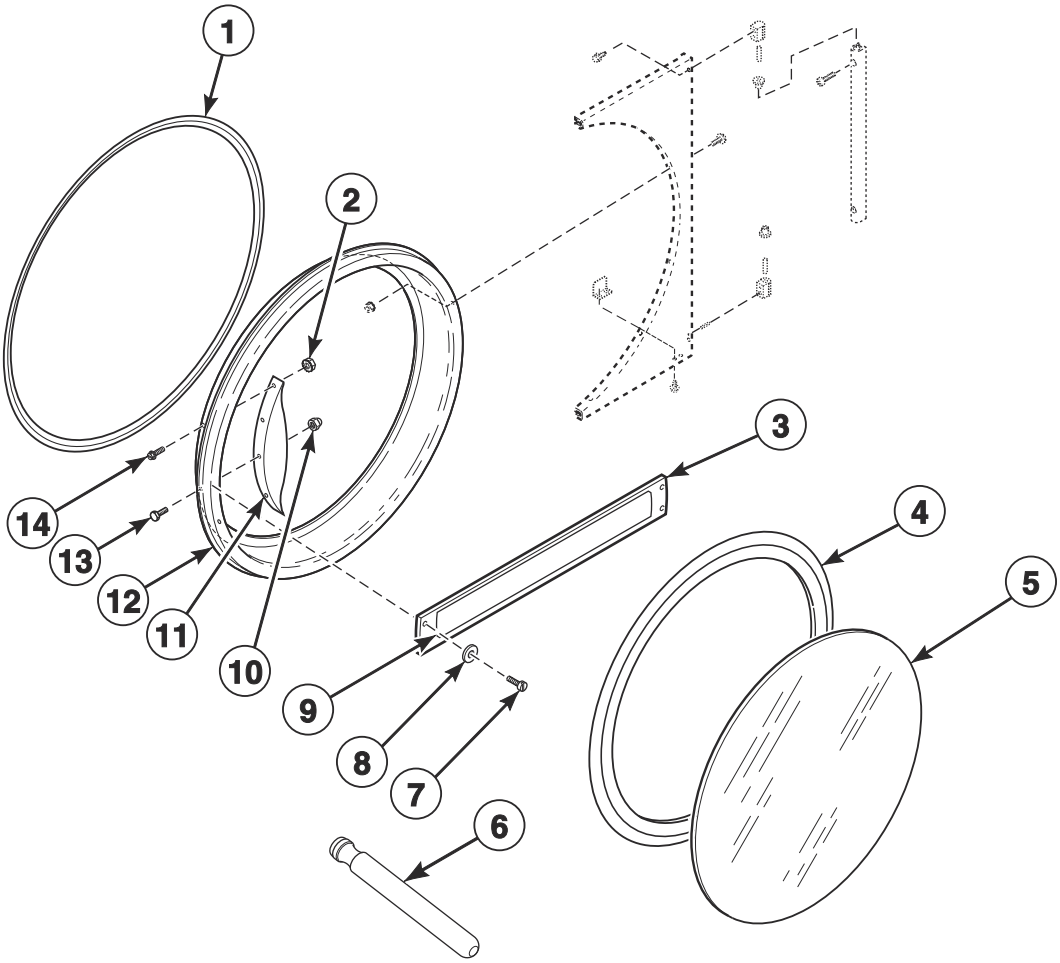

TMB3152PA_70591801

© Copyright, Alliance Laundry Systems LLC – DO NOT COPY or TRANSMIT

Door Components

REF	PART NO.	DESCRIPTION	COMMENTS
	70650401	Door Glass Label	H models; Design 5
	70707701	Door Glass Label	S models
	70707501	Max Fill Line Label	
1	70296802	Door Ring Gasket	H models with chrome handle
	44008201P	Door Ring Gasket	All other models
2	44088001	Nut	B, H, M, N and S models; 4 required
3	70399501B	Handle Bar	G and K models
4	70211902P	Door Seal Kit	Use Loctite 414 for seal
5	44008402P	Door Glass	H models; Design 3
	44008403	Door Glass	H models; Green trim; Design 3
	44008405	Door Glass	H models; Green trim; Design 5
	44008404	Door Glass	B models; Orange trim
	44008401P	Door Glass	All other models; Design 5 H models
6	M4221P4	Door Glass Installation Tool	
7	70412601	Pop Rivet	G and K models; Attaches door handle to door ring
8	70409301	Washer	G and K models
9	70414001	Label	G and K models; Coin
10	M414215	Nut	For door strike; Mounts between door strike screw and door handle
11	44007901	Door Handle	B, M, N and S models
	44263801	Door Handle	U models; Use 901620 Screw, 800465 Washer, 803871 Screw and 44088001 Nut to attach; 90-degree chrome pull handle
	70521102	Door Handle	H models; Design 3
	44370601	Door Handle	H models; Design 5
12	44326001	Door Ring Assembly	M models; Stainless steel; Design 3 H and S models
	44326005	Door Ring Assembly	M models; Chrome; Design 3 H and S models
	44326002	Door Ring Assembly	U models; Design 3
	44326006	Door Ring Assembly	U models; Chrome; Design 3
	44326004B	Door Ring Assembly	B and N models
	44326007LG	Door Ring and Handle Assembly	P models; Light gray
	44326007B	Door Ring and Handle Assembly	P models; Includes handle; Use with stainless steel and white front panel
	44326003B	Door Ring Assembly	G and K models
13	M400661	Screw	Door Strike
14	70442101	Screw	B, H, M, N and S models; 4 required

© Copyright, Alliance Laundry Systems LLC – DO NOT COPY or TRANSMIT

Hinge Components - Design 3 Models

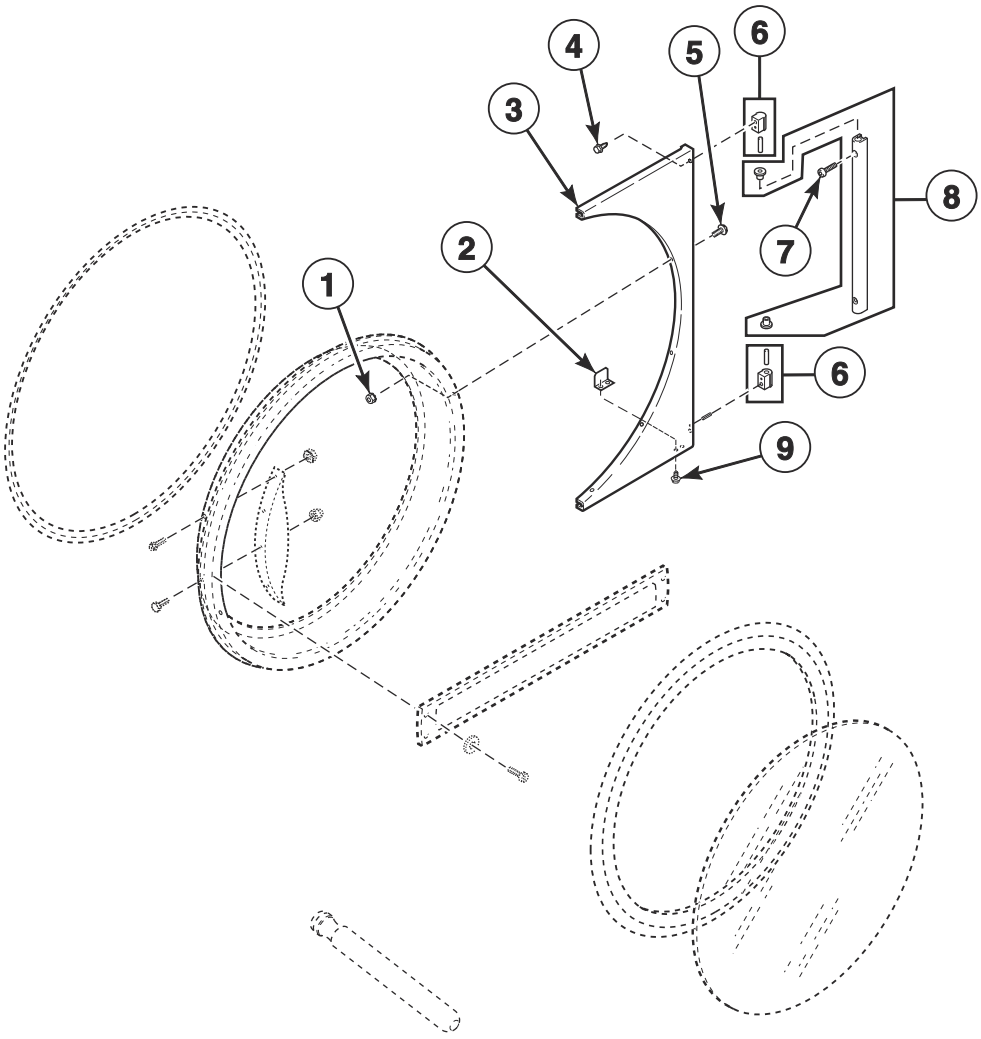

TMB3091PA_70591801

© Copyright, Alliance Laundry Systems LLC – DO NOT COPY or TRANSMIT

Hinge Components - Design 3 Models

REF	PART NO.	DESCRIPTION	COMMENTS
1	44088001	Nut	6 required
2	70215001P	Door Switch Actuator Kit	
3	44075208B	Door Hinge Assembly	Black; B, G, K and N models; P models with white and stainless steel front panels
	44075203*	Door Hinge Assembly	H, M, N, S and U models
	44075211	Door Hinge Assembly	H, M, S and U models; Stainless steel
	44075208LG	Door Hinge Assembly	P and U models; Light gray
4	70442101	Screw	3 required
5	44349101	Screw	6 required
6	M4773P3	Hinge Cam Kit	Black; B, G, K and N models; P models with white and stainless steel front panels
	M4772P3	Hinge Cam Kit	H, M, P, S and U models
7	70409801	Screw	Black; B, G, K and N models; P models with white and stainless steel front panels; 2 required
	70033502	Screw	H, M, P, S and U models; 2 required
8	44035002	Door Hinge Lug Assembly	Black; B, G, K and N models; P models with white and stainless steel front panels
	44035001	Door Hinge Lug Assembly	H, M, P, S and U models
9	70058501	Pop Rivet	2 required

*** Add Letter To Designate Color. Q - Bisque W - White**

© Copyright, Alliance Laundry Systems LLC – DO NOT COPY or TRANSMIT

Hinge Components - Design 5 Models

H, S and U Models

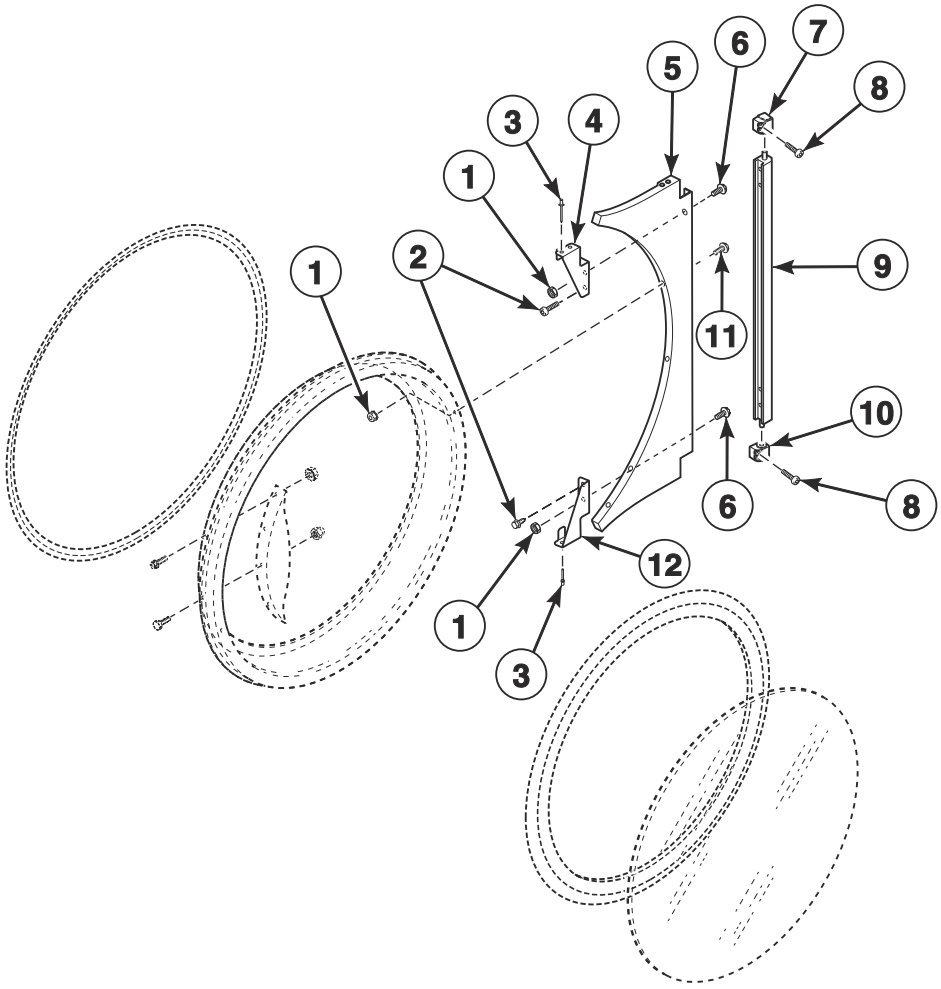

TMB3805P_70591801

© Copyright, Alliance Laundry Systems LLC – DO NOT COPY or TRANSMIT

Hinge Components - Design 5 Models

REF	PART NO.	DESCRIPTION	COMMENTS
1	44088001	Nut	
2	802822	Screw	
3	70058501	Pop Rivet	
4	70632001	Upper Hinge Gusset	
5	44366606W	Door Hinge Assembly	White
	44366604	Door Hinge Assembly	Stainless steel
	44366602LG	Door Hinge Assembly	Light gray; U models
	44366608	Door Hinge Assembly	Chrome
6	70640201	Screw	
7	70639301	Upper Lug Assembly	Use with 2 of item 8
8	70640301	Screw	
9	70640401	Center Hinge Lug Assembly	
10	70639302	Lower Lug Assembly	Use with 2 of item 8
11	44349101	Screw	
12	70632002	Lower Hinge Gusset	

© Copyright, Alliance Laundry Systems LLC – DO NOT COPY or TRANSMIT

Cylinder and Trunnion Components

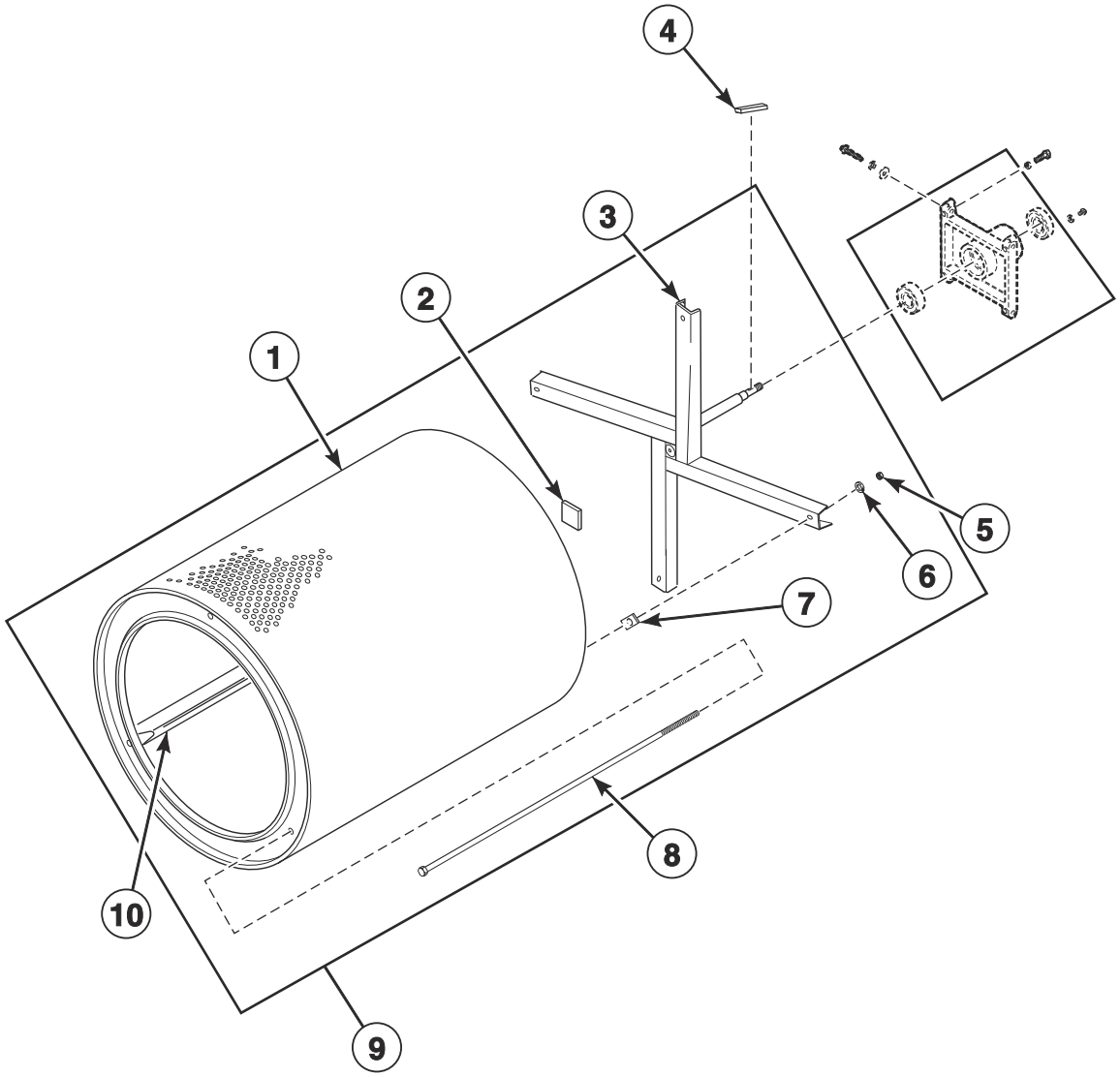

TMB3796P_70591801

© Copyright, Alliance Laundry Systems LLC – DO NOT COPY or TRANSMIT

Cylinder and Trunnion Components

REF	PART NO.	DESCRIPTION	COMMENTS
1	44057001P	Cylinder Kit	Galvanized; B, H, M, N, P, S and U models; Non-moisture sensing
	44196301	Cylinder Assembly	Galvanized; B, H, M, N, P, S and U models; Moisture sensing
	44057101P	Cylinder Kit	Stainless steel; B, H, M, N, P, S and U models; Non-moisture sensing
	44196302	Cylinder Assembly	Stainless steel; B, H, M, N, P, S and U models; Moisture sensing
	44130802	Cylinder Assembly	G and K models; Non-moisture sensing
	44196303	Cylinder Assembly	G and K models; Moisture sensing
2	M402144	Felt Pad	
3	44208001P	Trunnion Assembly	Spider; Non-moisture sensing
	44207901P	Trunnion Assembly	Moisture sensing
4	M400008	Key	Half moon
5	M404993	Nut	
6	M400015	Washer	4 required
7	M401402	Spacer	Adjustment between cylinder and trunnion
8	M401411	Rib Rod	
9	44195601	Cylinder and Trunnion Assembly	Galvanized; B, H, M, N, P, S and U models; Non-moisture sensing
	44195602	Cylinder and Trunnion Assembly	Stainless steel; B, H, M, N, P, S and U models; Non-moisture sensing
	44195605P	Cylinder and Trunnion Assembly	Galvanized; B, H, M, N, P, S and U models; Moisture sensing
	44195606	Cylinder and Trunnion Assembly	Stainless steel; B, H, M, N, P, S and U models; Moisture sensing
	44195603	Cylinder and Trunnion Assembly	G and K models; Non-moisture sensing
	44195607	Cylinder and Trunnion Assembly	G and K models; Moisture sensing
10	44191201	Cylinder Rib Assembly	Moisture sensing
	M403002	Cylinder Rib	Non-moisture sensing; Galvanized
	44076201	Cylinder Rib	Non-moisture sensing; Stainless steel

© Copyright, Alliance Laundry Systems LLC – DO NOT COPY or TRANSMIT

Bearing Components

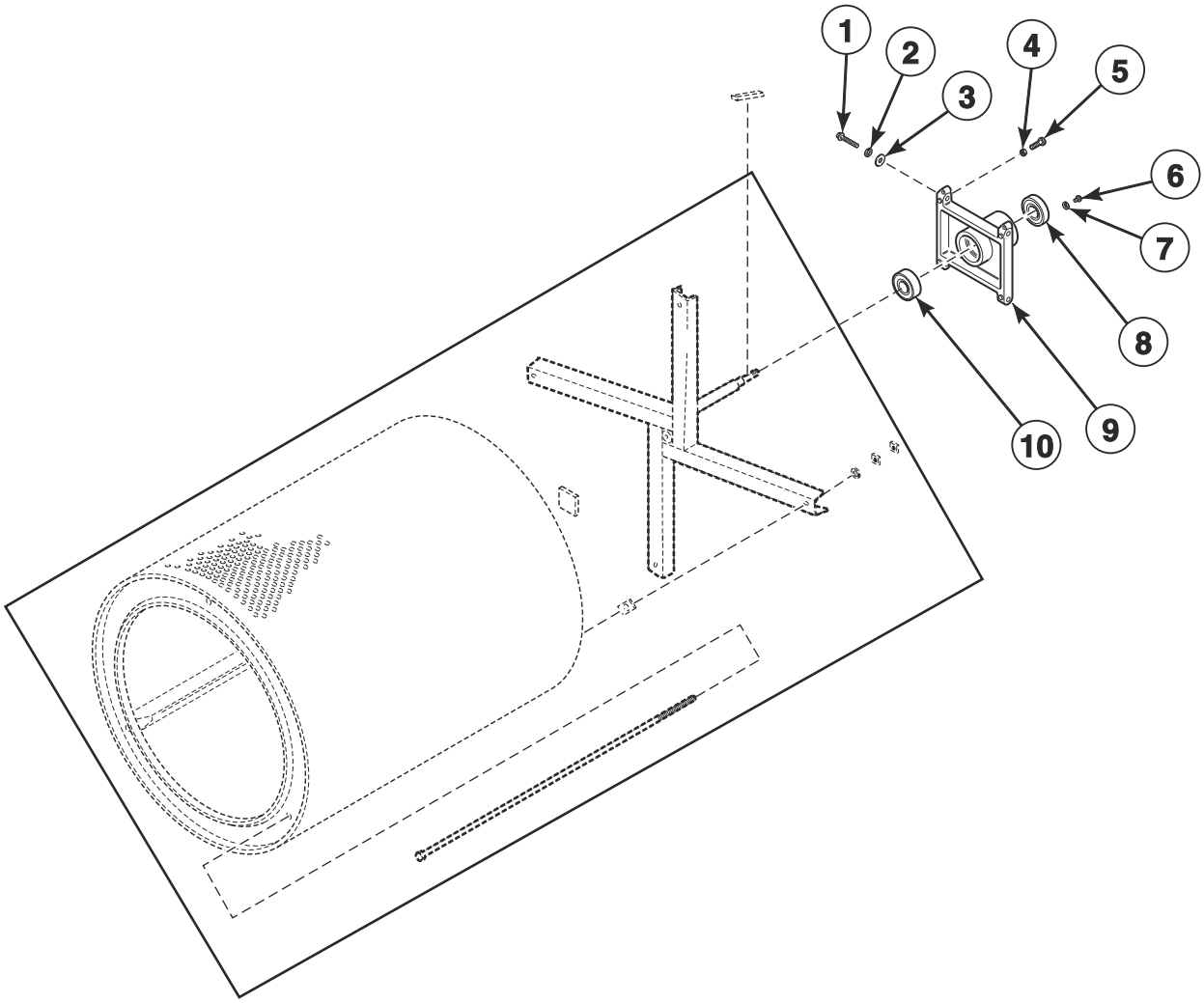

TMB2123PA_70621701

© Copyright, Alliance Laundry Systems LLC – DO NOT COPY or TRANSMIT

Bearing Components

REF	PART NO.	DESCRIPTION	COMMENTS
	M4640P3	Trunnion and Bearing Assembly	Non-moisture sensing
	44336301	Trunnion and Bearing Assembly	Moisture sensing
	M4644P3	Housing and Trunnion Assembly	Includes bearing; Non-moisture sensing
	44336302	Housing and Trunnion Assembly	Moisture sensing
1	M400063	Screw	4 required
2	M400015	Washer	4 required
3	70261401	Washer	4 required
4	M400026	Nut	4 required
5	M400650	Bolt	2 required
6	70187201	Screw	4 required
7	20103	Washer	4 required
8	M413923P	Bearing	
9	44375001P	Trunnion Assembly	
10	44041901P	Ball Bearing	

© Copyright, Alliance Laundry Systems LLC – DO NOT COPY or TRANSMIT

Moisture Sensing Components

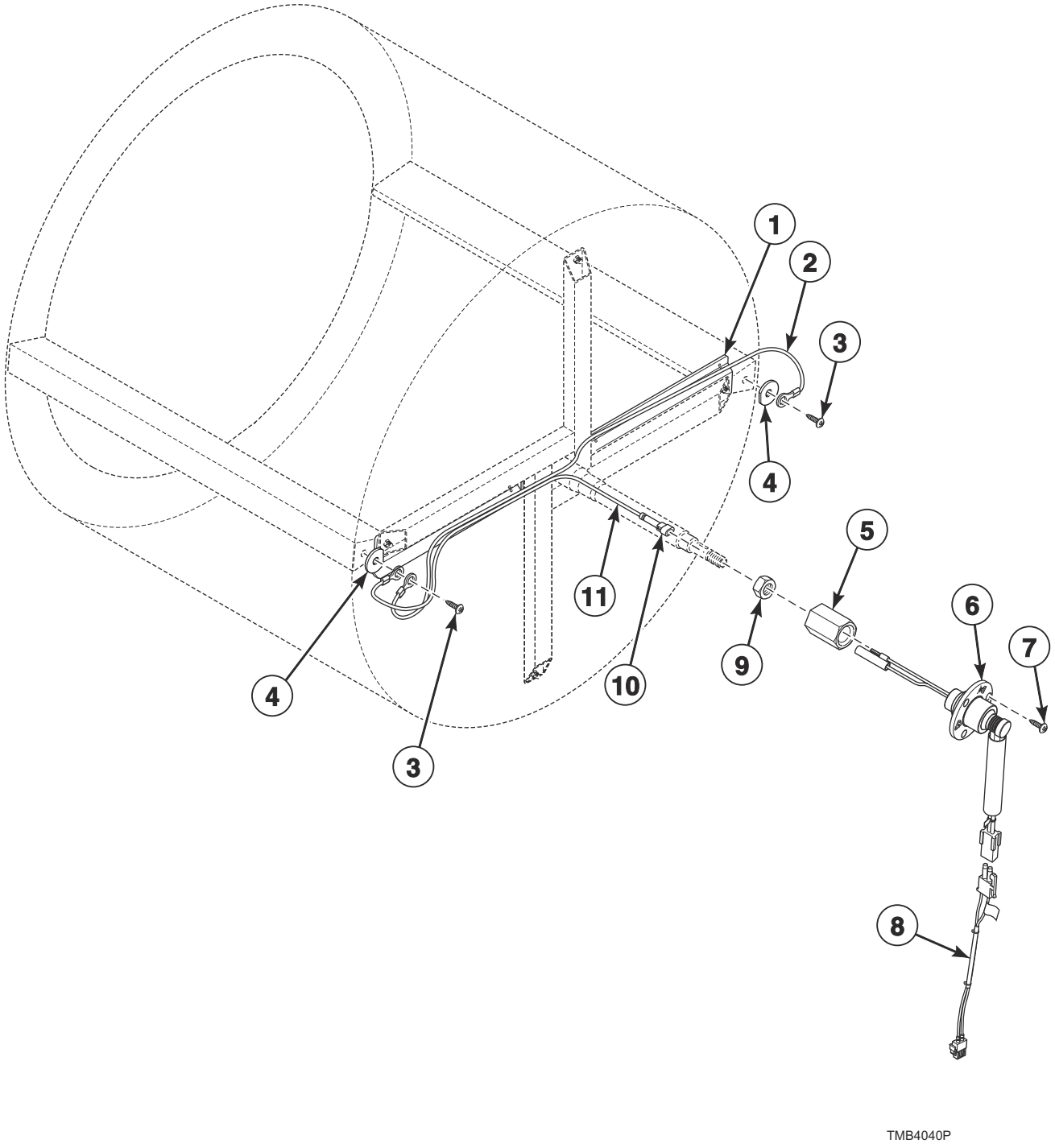

© Copyright, Alliance Laundry Systems LLC – DO NOT COPY or TRANSMIT

Moisture Sensing Components

REF	PART NO.	DESCRIPTION	COMMENTS
	44344702	Moisture Sensing Harness Kit	
	55881	Harness Strap	Use with item 1
1	44239101	Wireway Channel	
2	44208601	Rib Wire	
3	44338901	Screw	
4	44238902	Washer	
5	44224401	Slip Ring Holder	
6	44222702	Slip Ring Assembly	
7	70442101	Screw	
8	44333902	Moisture Sensor Harness	Goes from item 6 to main harness
9	M400033	Nut	
10	44370401	1 Circuit Plug Housing	
11	44208702	Shaft Wire	

© Copyright, Alliance Laundry Systems LLC – DO NOT COPY or TRANSMIT

Drive Motor Components

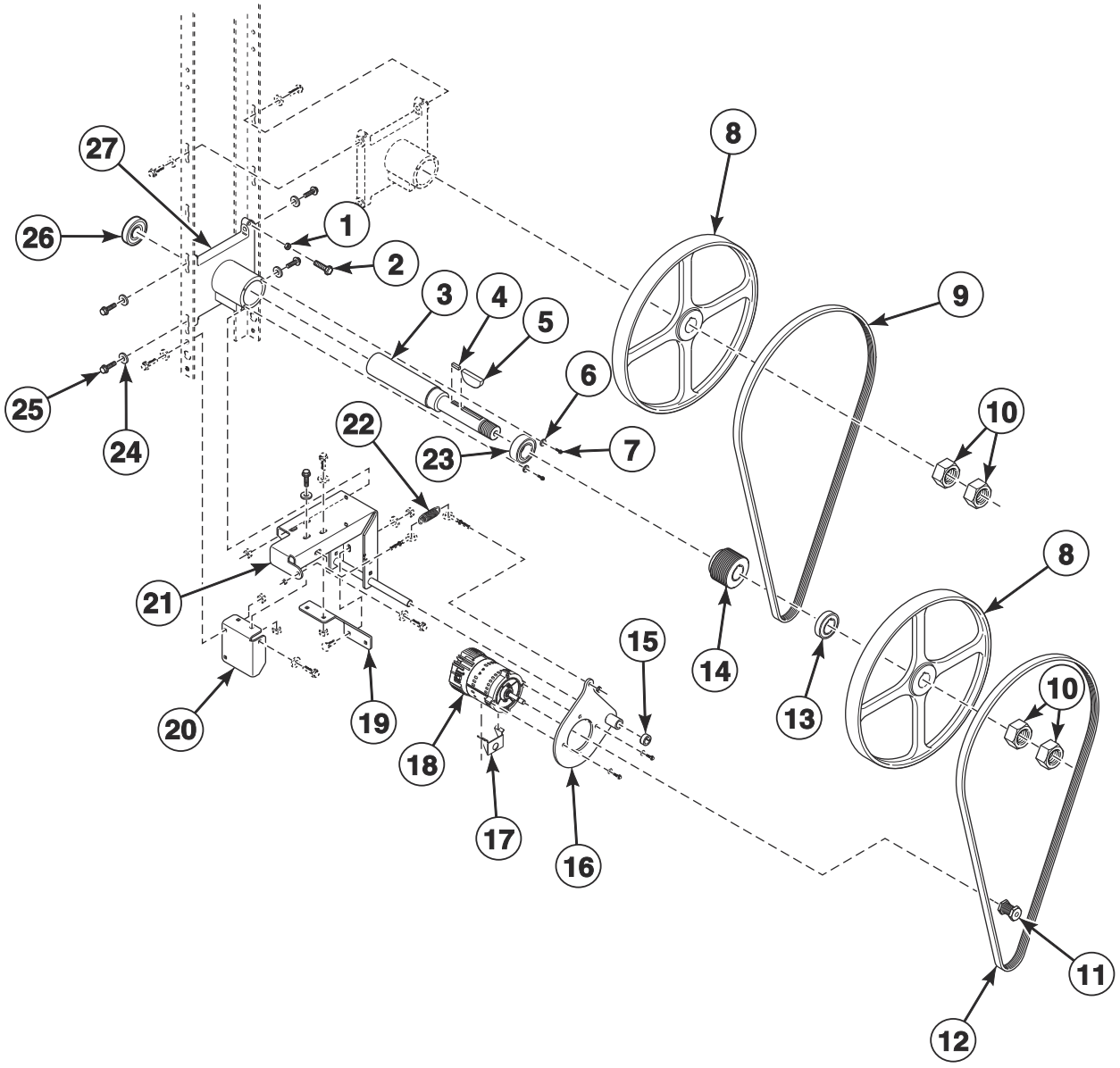

TMB4043P

© Copyright, Alliance Laundry Systems LLC – DO NOT COPY or TRANSMIT

Drive Motor Components

REF	PART NO.	DESCRIPTION	COMMENTS
	44333202	Nut	Use with motor pulley
	44335304	Inverter Motor Harness	Cylinder
1	M400026	Nut	
2	M400650	Bolt	
3	44303102	Idler Shaft	
4	44309301	Key	
5	M400008	Key	
6	20103	Washer	
7	70187201	Screw	
8	44289502	Pulley	
9	44333301	V-Belt	Upper
10	M400033	Nut	
11	70559102	Motor Pulley	
12	44309402	V-Belt	Lower
13	44306801	Idler Spacer	
14	44270201	Micro V Pulley	
15	70467001	Shaft Collar	
16	44311501	Motor Pivot Plate Weldment	
17	44317901	Motor Conduit Bracket	
18	44259501P	Drive Motor	.50 HP; 120, 230 Volt/1 Phase
	44259601P	Drive Motor	.50 HP; 380-460 Volt/3 Phase
19	44325701	Motor Pivot Gusset Bracket	
20	44325801	Motor Pivot Support Bracket	
21	44327001	Motor Pivot Bracket Weldment	
22	F8440701	Extension Spring	
23	M413923P	Bearing	
24	70261401	Washer	4 required
25	805213	Screw	4 required
26	44041901P	Ball Bearing	
27	M413826P	Trunnion Housing	

© Copyright, Alliance Laundry Systems LLC – DO NOT COPY or TRANSMIT

Blower and Exhaust Components

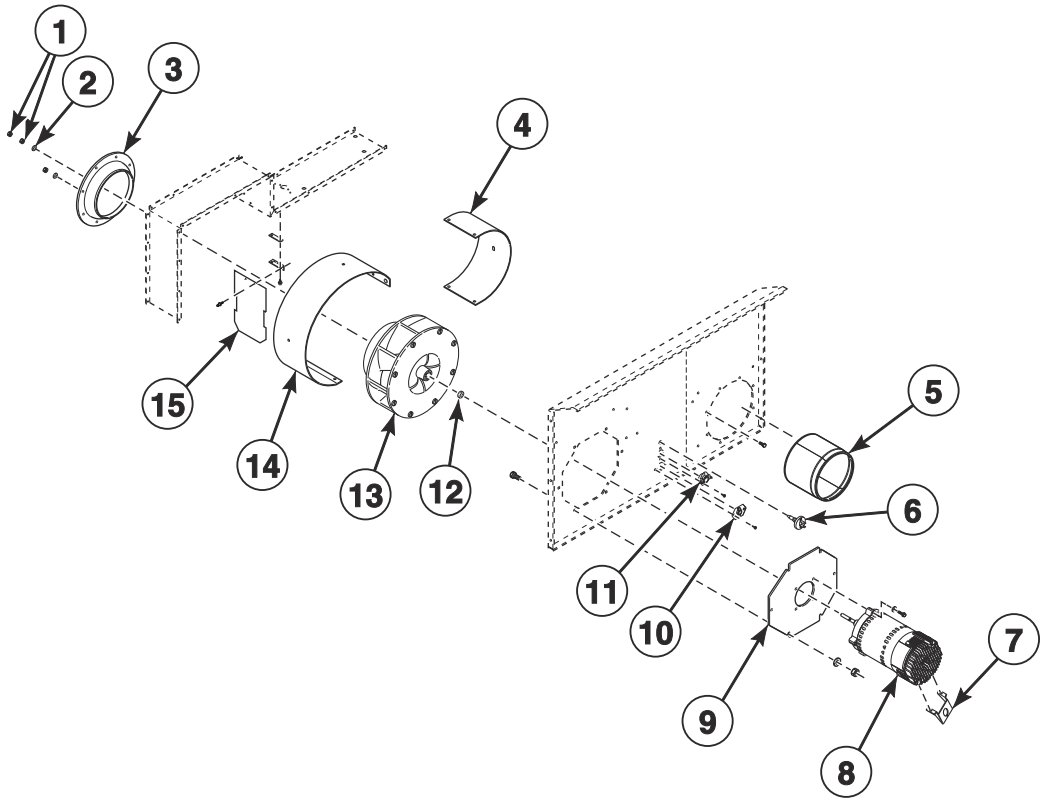

TMB3730P

© Copyright, Alliance Laundry Systems LLC – DO NOT COPY or TRANSMIT

Blower and Exhaust Components

REF	PART NO.	DESCRIPTION	COMMENTS
	44335305	Inverter Motor Harness	Fan
1	M400022	Nut	
2	F431131	Washer	
3	44308401	Air Exhaust Deflector	
4	70303101	Blower Inlet Cone	
5	44327901	Exhaust Pipe Assembly	
6	M414704	Thermistor	
7	44317901	Motor Conduit Bracket	
8	70478701P	Fan Motor	.50 HP; 120, 230 Volt/1 Phase
	70484901P	Fan Motor	.50 HP; 380-460 Volt/3 Phase
9	70380801	Blower Motor Mounting Plate	
10	70530905	Limit Thermostat	
11	44328003	Limit Thermostat	
12	70599301	Fan Spacer	
13	70302201P	Blower Assembly	
14	44303801	Blower Housing Scroll	
15	44280301	Damper Assembly	

© Copyright, Alliance Laundry Systems LLC – DO NOT COPY or TRANSMIT

Airflow Switch Assembly

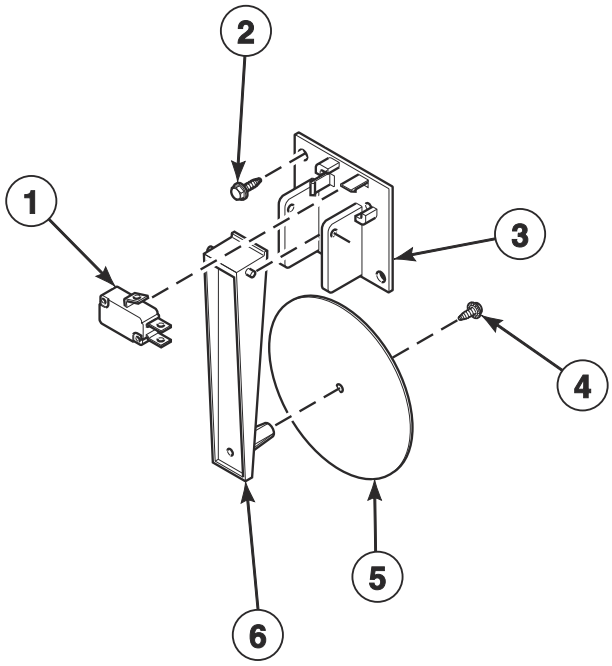

TMB3586P_70591801

© Copyright, Alliance Laundry Systems LLC – DO NOT COPY or TRANSMIT

Airflow Switch Assembly

REF	PART NO.	DESCRIPTION	COMMENTS
	70429602	Airflow Switch Assembly	Includes items 1 and 3-6
1	70411901	Switch	
2	430497	Screw	6 required
3	70319602	Airflow Switch and Arm Bracket	
4	430757	Screw	
5	70319202	Airflow Switch Vane	
6	70319401	Airflow Switch Arm	

© Copyright, Alliance Laundry Systems LLC – DO NOT COPY or TRANSMIT

Gas Heater Components

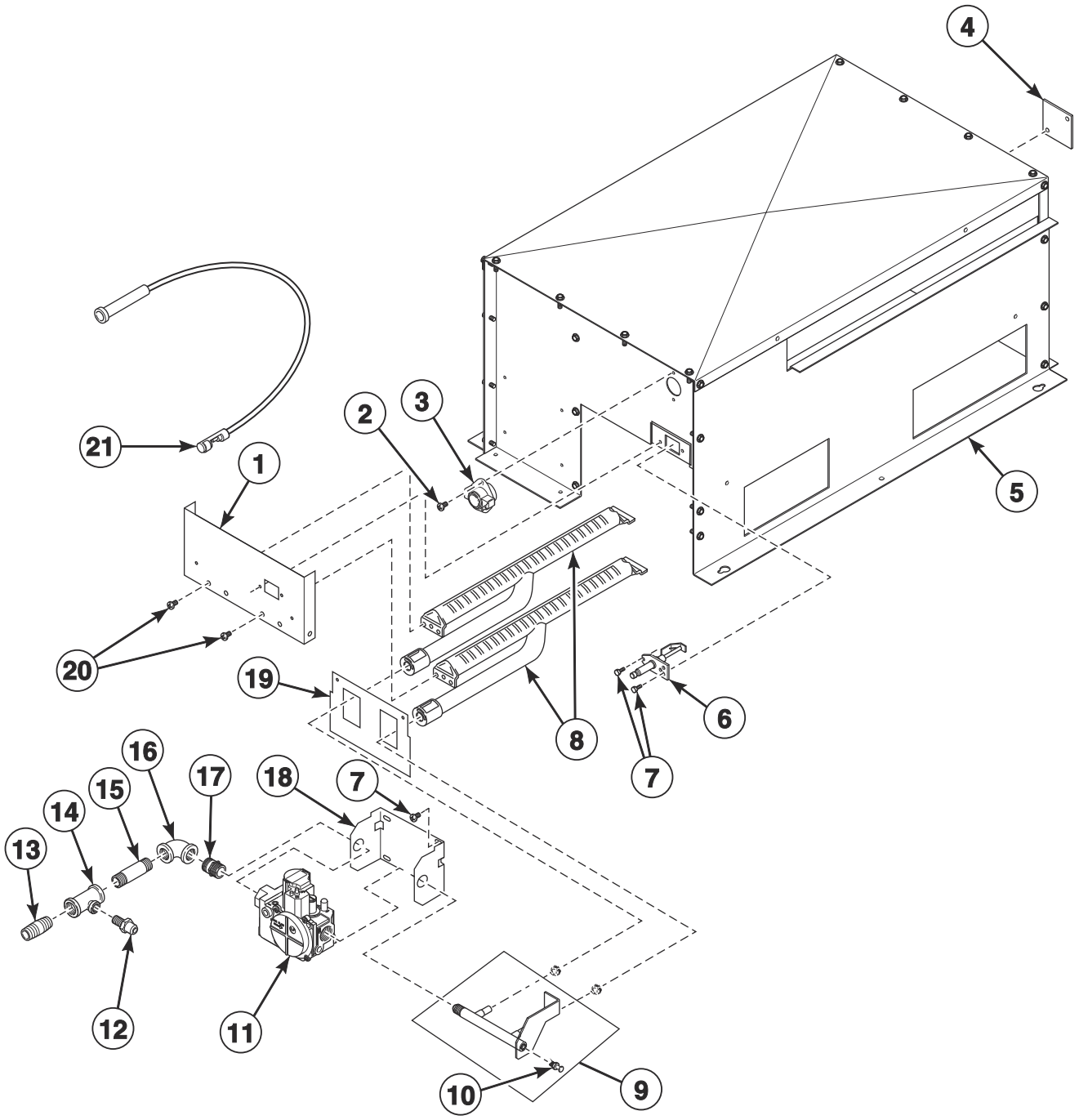

TMB3545P_70591801

© Copyright, Alliance Laundry Systems LLC – DO NOT COPY or TRANSMIT

Gas Heater Components

REF	PART NO.	DESCRIPTION	COMMENTS
	70539501	Notice Label	Australian models; Natural Gas (N.G.)
	70544901	Notice Label	Australian models; Liquid Petroleum Gas (L.P.)
	D503887	Label	Australian models; Gas
	44178801	Adapter	CE and Australian models; Used to convert from standard to metric thread
	44328801	L.P. Conversion Kit	North America and Australia models; 0-2000 feet
	44330301	L.P. Conversion Kit	IEC models; 0-2000 feet
	70564304	Stove Limit Harness	
	44273502	Gas Valve Harness	Double; CE models
	44273501	Gas Valve Harness	Single
	44355101P	Direct Air Kit	
	70500401	Heat Exchanger	
1	44110201	Burner Support	
2	M402797	Screw	2 required
3	44328007	Limit Thermostat	
4	70159601	Igniter Cover	
5	44136004	Gas Stove Assembly	
6	44328701P	Spark Electrode	
7	430497	Screw	2 required
8	M410541P	Burner Assembly	2 required
9	44263101	Spud Holder Weldment	
10	70167601	Plug	
11	44154501P	Gas Valve	North America models; N.G.
	44154502P	Gas Valve	North America models; L.P.
	44298501	Gas Valve	Australian models; N.G.
	44298504	Gas Valve	Australian models; L.P.
	44178301P	Gas Valve	CE models; N.G.
	44178302P	Gas Valve	CE models; L.P.
	44154505	Gas Valve	All other models; N.G.
	44154506	Gas Valve	All other models; L.P.
12	44231601	Pressure Fitting	CE and Australian models
13	70612603	Pipe Nipple	CE and Australian models
14	44231902	Pipe Tee	CE and Australian models
15	70612602	Pipe Nipple	CE and Australian models
	70210201	Pipe Nipple	T market models
	70612601	Pipe Nipple	All other models
16	70079601	Elbow	T market models
	70612501	Street Elbow	All other models
17	431486	Pipe Nipple	T market models
	F421921	Nipple	All other models
18	44175703	Gas Valve Bracket	
19	44136101	Rear Access Plate	
20	70240301	Screw	4 required
21	44239705	High Voltage Suppression Cable	

© Copyright, Alliance Laundry Systems LLC – DO NOT COPY or TRANSMIT

Burner Orifices

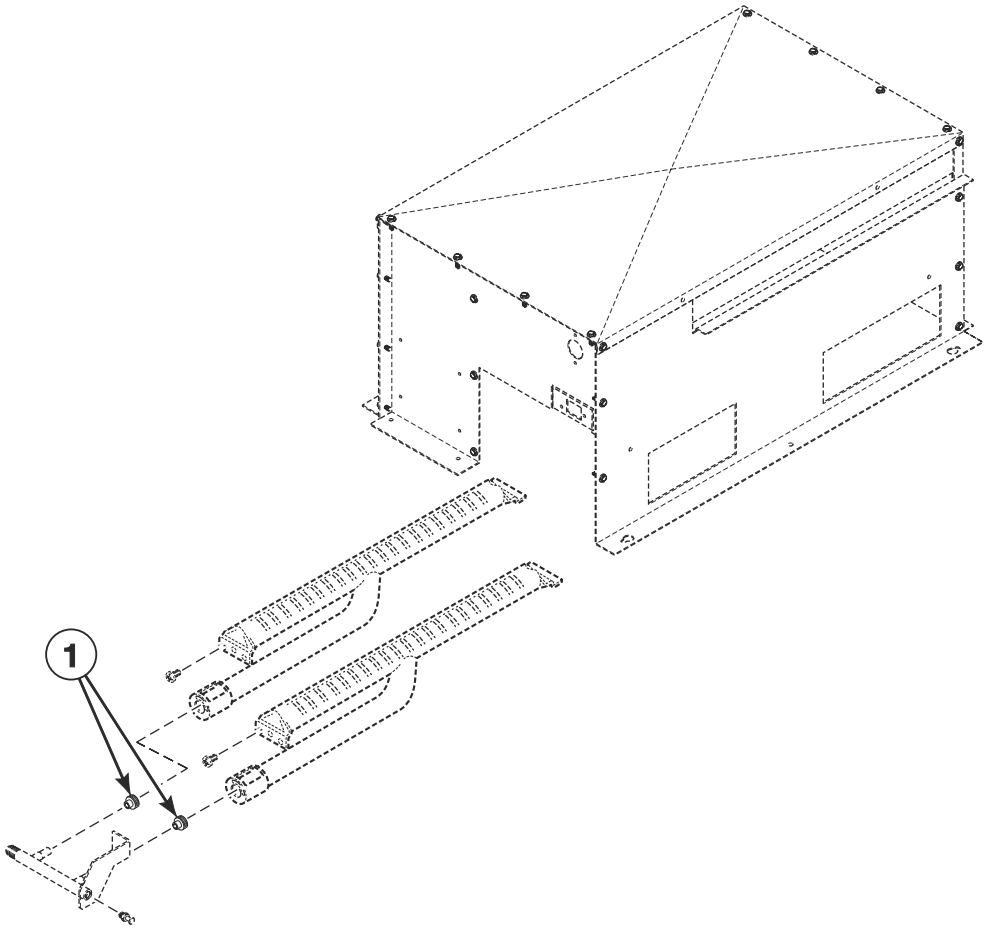

TMB3546P_70591801

© Copyright, Alliance Laundry Systems LLC – DO NOT COPY or TRANSMIT

Burner Orifices

REF	PART NO.	DESCRIPTION	COMMENTS
	44357501	High Altitude Orifice Kit	North America Natural gas (N.G.) models
	44357502	High Altitude Orifice Kit	North America Liquid Petroleum Gas (L.P) models
1	70684138	Burner Orifice	N.G. models; Drill no. 24 (3.86 mm); 0-2,000 feet
	70684134	Burner Orifice	N.G. models; Drill no. 28 (3.66 mm); 2,001-4,000 feet
	70684132	Burner Orifice	N.G. models; Drill no. 29 (3.57 mm); 4,001-6,000 feet
	70684130	Burner Orifice	N.G. models; 3.3 mm; 6,001-10,000 feet
	70684113	Burner Orifice	Models with 2nd digit A, G, H, J, K, L and T; L.P.; 2.30 mm; 0-2,000 feet
	70684110	Burner Orifice	Models with 2nd digit A, G, H, J, K, L and T; L.P.; Drill no. 44 (2.18 mm); 2,001-4,000 feet
	70684109	Burner Orifice	Models with 2nd digit A, G, H, J, K, L and T; L.P.; Drill no. 45 (2.08 mm); 4,001-6,000 feet
	70684108	Burner Orifice	Models with 2nd digit A, G, H, J, K, L and T; L.P.; Drill no. 46 (2.06 mm); 6,001-8,000 feet
	70684106	Burner Orifice	Models with 2nd digit A, G, H, J, K, L and T; L.P.; Drill no. 48 (1.93 mm); 8,001-10,000 feet
	70684106	Burner Orifice	CE models; L.P.; Drill no. 48 (1.93 mm); 0-2,000 feet
	70684105	Burner Orifice	CE models; L.P.; Drill no. 49 (1.85 mm); 2,001-4,000 feet
	70684104	Burner Orifice	CE models; L.P.; Drill no. 50 (1.78 mm); 4,001-6,000 feet
	M401019	Burner Orifice	CE models; L.P.; Drill no. 51 (1.70 mm); 6,001-8,000 feet
	70684103	Burner Orifice	CE models; L.P.; Drill no. 52 (1.61 mm); 8,001-10,000 feet
	70684109	Burner Orifice	J market models; L.P.; Drill no. 45 (2.08 mm); 0-2,000 feet
	70684107	Burner Orifice	J market models; L.P.; Drill no. 47 (1.99 mm); 2,001-4,000 feet
	70684106	Burner Orifice	J market models; L.P.; Drill no. 48 (1.93 mm); 4,001-6,000 feet
	70684105	Burner Orifice	J market models; L.P.; Drill no. 49 (1.85 mm); 6,001-8,000 feet
	70684104	Burner Orifice	J market models; L.P.; Drill no. 50 (1.78 mm); 8,001-10,000 feet

© Copyright, Alliance Laundry Systems LLC – DO NOT COPY or TRANSMIT

Electric Heater Components

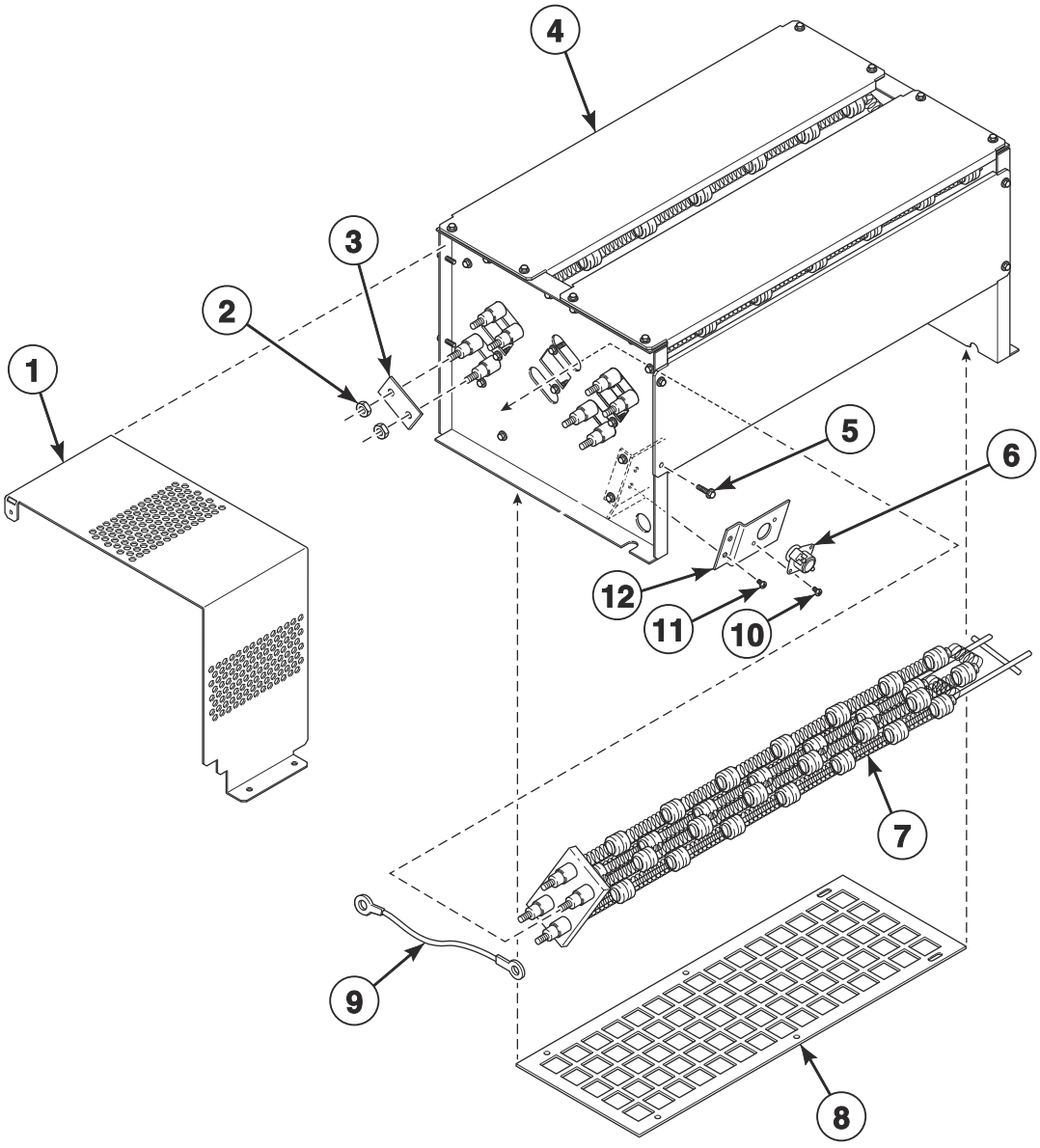

TMB3587P_70591801

© Copyright, Alliance Laundry Systems LLC – DO NOT COPY or TRANSMIT

Electric Heater Components

REF	PART NO.	DESCRIPTION	COMMENTS
	44355101P	Direct Air Kit	
	70500401	Heat Exchanger	
	70564304	Stove Limit Harness	
	44281706	Harness	200-240 Volt; Contactor to element
	44281707	Harness	Contactor element
1	44327302	Electric Wrap	
2	70054	Nut	
3	M400869	Jumper Strip	3 required for high voltage; 6 required for low voltage
4	44252501	Electric Stove Assembly	
5	70240301	Screw	
6	44328006	Limit Thermostat	
7	M410939P	Heater Element	3 required; 10 kW; 240 Volt heater element for 230-240, 400-415 and 480 Volt/3 Phase models
	M410940P	Heater Element	3 required; 10 kW; 208 Volt heater element for 200-208 Volt/3 Phase models
	M410941P	Heater Element	3 required; 10 kW 220 Volt heater element for 380 and 440 Volt/3 Phase models
	M412955P	Heater Element	3 required; 7 kW; 240 Volt heater element for 230-240 Volt/1 Phase models
8	44308801	Heating Element Screen	
9	44281708	Jumper Harness	3 inch
	44281709	Jumper Harness	9 inch
10	33562	Screw	
11	430497	Screw	
12	44226101	Limit Offset Bracket	

© Copyright, Alliance Laundry Systems LLC – DO NOT COPY or TRANSMIT

Steam Heater and Valve

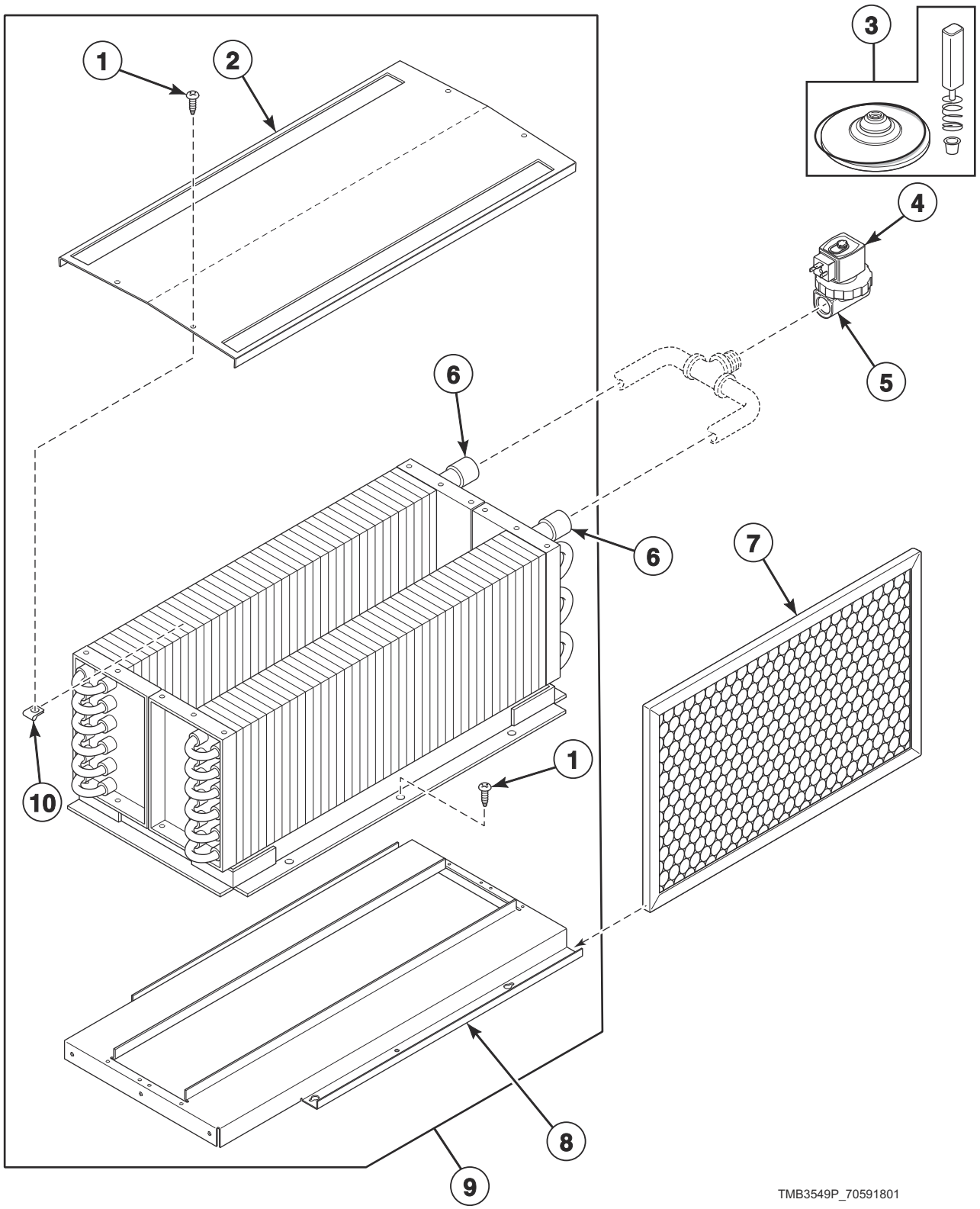

© Copyright, Alliance Laundry Systems LLC – DO NOT COPY or TRANSMIT

Steam Heater and Valve

REF	PART NO.	DESCRIPTION	COMMENTS
	70564302	Stove Limit Bypass Harness	
	F8520703	Steam Valve Harness	
	44314701	Steam Adapter Kit	IEC models
	44304801	Strain Relief	
	F8382301	DIN Valve Adapter Kit	Use with item 5
1	23008	Screw	4 required
2	M400828	Low Pressure Steam Cover	
3	F8379502	Valve Rebuild Kit	
4	F8514701	Coil	120 Volt
	F8514601P	Coil	240 Volt
5	F8322904P	Steam Valve	120 Volt
	F8322906P	Valve	240 Volt
6	M400637P	Steam Coil	2 required
7	44172001	Filter	Aluminum; 2 required; IEC models
	44104201	Air Filter	Fiberglass; 2 required; North America models
8	44007501	Steam Stand Box	
9	44020402	Steam Heater Assembly	CRN models
	44020401P	Steam Heater Assembly	All other models
10	36020	Nut	4 required

© Copyright, Alliance Laundry Systems LLC – DO NOT COPY or TRANSMIT

Control Tray

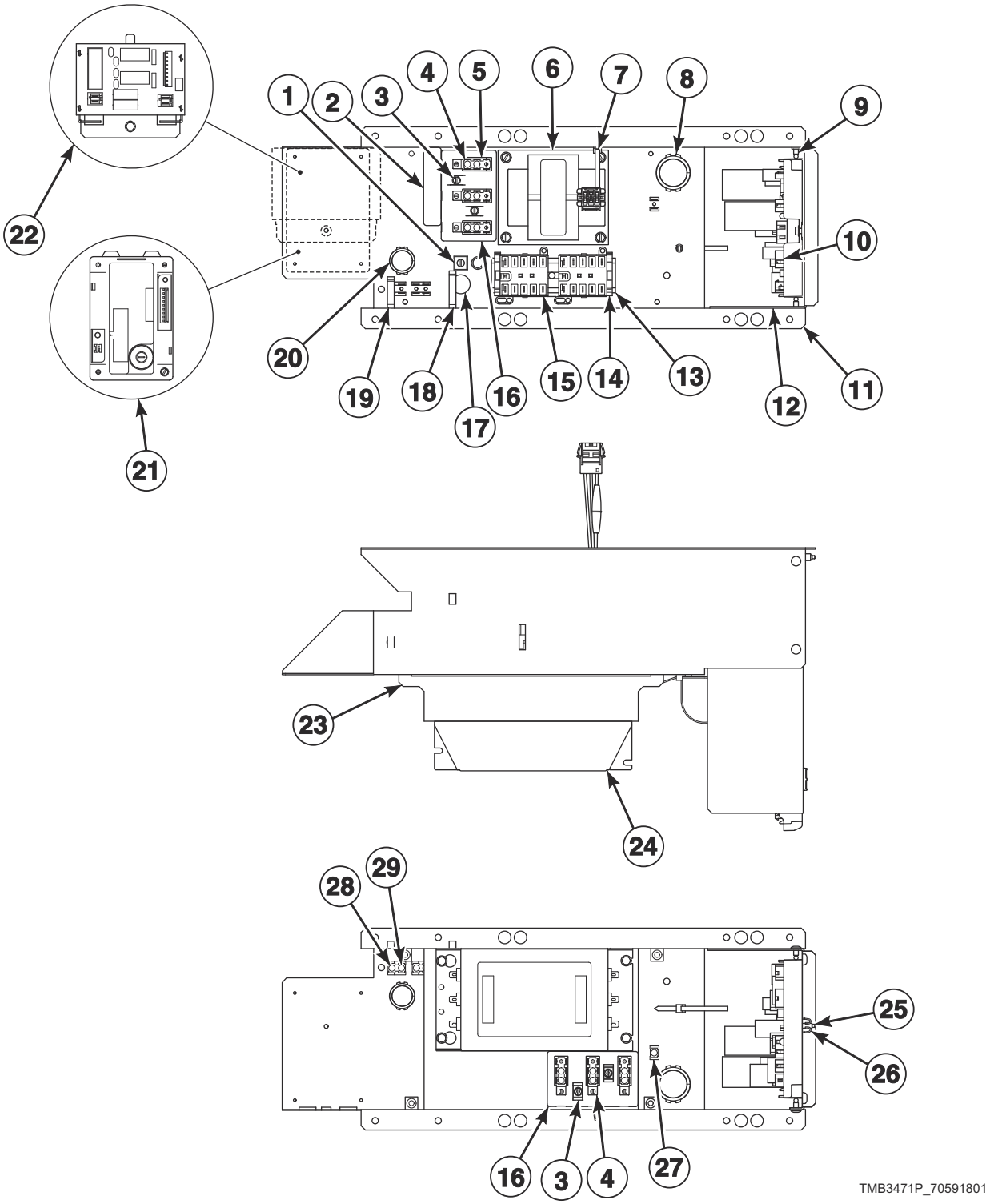

© Copyright, Alliance Laundry Systems LLC – DO NOT COPY or TRANSMIT

Control Tray

REF	PART NO.	DESCRIPTION	COMMENTS
	685837	Screw	Use with item 1
	44088001	Nut	Use with item 1
	70559302	Conversion Kit	X to B voltage
	44357401	EMI Filter Kit	North America models; 100-240 Volt
	44357402	EMI Filter Kit	North America models; 380-480 Volt
1	M411283	Ground Lug Connector	
2	44286803	Label	L1, L2, L3
	44286801	Label	L1, N
	44286802	Wire Label	L1 L2, L1 N
	44286804	Wire Label	L1 L2, L1 N, L1 L2 L3
3	51783	Screw	
4	430642	Terminal Block	
5	70333001	Terminal Block Shield	
6	F8491101	Transformer	380-480 Volt
7	70335601	Cable Tie	
8	70346501	Bushing	
9	70058501	Pop Rivet	
10	70671701	I/O Control Assembly	
11	70492401	Control Tray	
12	70494901	Control Board Control Tray	
13	M412690	DIN Rail	
14	F8449801	End Stop	
15	70482601	Contactor	240 Volt or less: 1 required; 380 Volt or higher: 2 required
16	M413862	Insulator	
17	D516100	Label	
18	F8449501	Wire Clip	
19	F8449502	Wire Clip	
20	70178701	Snap Bushing	
21	70482002P	Ignition Control	IEC gas models
	70482001	Ignition Control	North America gas models
22	70501801	Steam Control Assembly	Steam models
23	70533101	Filter Bracket	
24	F8591601	EMI Filter	IEC models; 100-200 and 200-240 Volt/1 Phase
	F8637501	EMI Filter	IEC models; 380-480 Volt
25	F8206901	Screw	
26	70030501	Expansion Clip	
27	00621SG	Male Tab Terminal	
28	M400003	Pop Rivet	
29	00622SG	Terminal	

© Copyright, Alliance Laundry Systems LLC – DO NOT COPY or TRANSMIT

Accessory Box - Electric 200-240 Volt Models

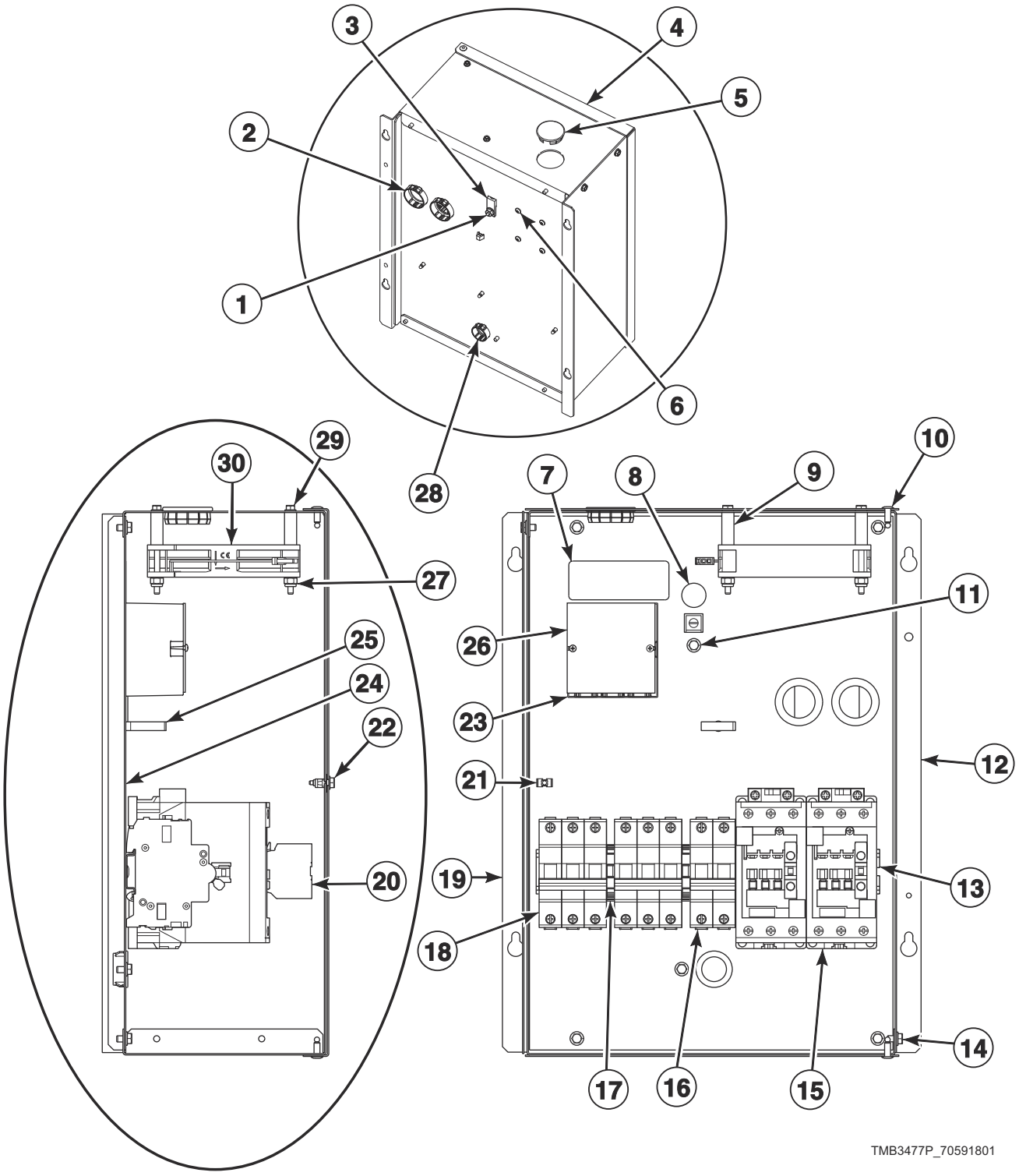

© Copyright, Alliance Laundry Systems LLC – DO NOT COPY or TRANSMIT

Accessory Box - Electric 200-240 Volt Models

REF	PART NO.	DESCRIPTION	COMMENTS
	44309003	Harness	North America models; Power distribution block to control circuit breaker
	44309013	Harness	IEC models; Power distribution block to control circuit breaker
	44281707	Harness	Contactor to element
	44281706	Harness	Contactor to element
	44281703	Harness	Power distribution block to element circuit breaker
	44281701	Harness	Power distribution block to element circuit breaker
1	44088001	Nut	2 required
2	M402542	Snap Bushing	
3	M411283	Ground Lug Connector	
4	44134004	Contactor Box Cover	
5	70180001	Plug	
6	39733	Screw	
7	44286802	Wire Label	1 Phase; L1, L2 L1, N
	44286803	Label	3 Phase; L1, L2, L3
8	D516100	Label	
9	44328601	Sleeve	2 required
10	70058502	Pop Rivet	
11	685837	Screw	
12	44292501	Contactor Box Side	Top
13	44229701	DIN Rail	
	70058501	Pop Rivet	
14	51780	Screw	
15	70482801	Contactor	2 required
16	70488102	Circuit Breaker	25 amp
17	F8449801	End Stop	2 required
18	70488104	Circuit Breaker	2 required; 50 amp
19	44292401	Contactor Box Side	Bottom
20	44313201	Auxiliary Contact Block	
21	70030501	Expansion Clip	
22	F8206901	Screw	
23	M413865	Power Distribution Block	
24	44292601	Contactor Box Base Plate	
25	F8449502	Wire Clip	
26	44014901P	Power Distribution Block Cover	
27	F430232	Nut	
28	F140938	Snap Bushing	
29	70546902	Screw	
30	F8504301	Fan	

© Copyright, Alliance Laundry Systems LLC – DO NOT COPY or TRANSMIT

Accessory Box - Electric 380-480 Volt Models

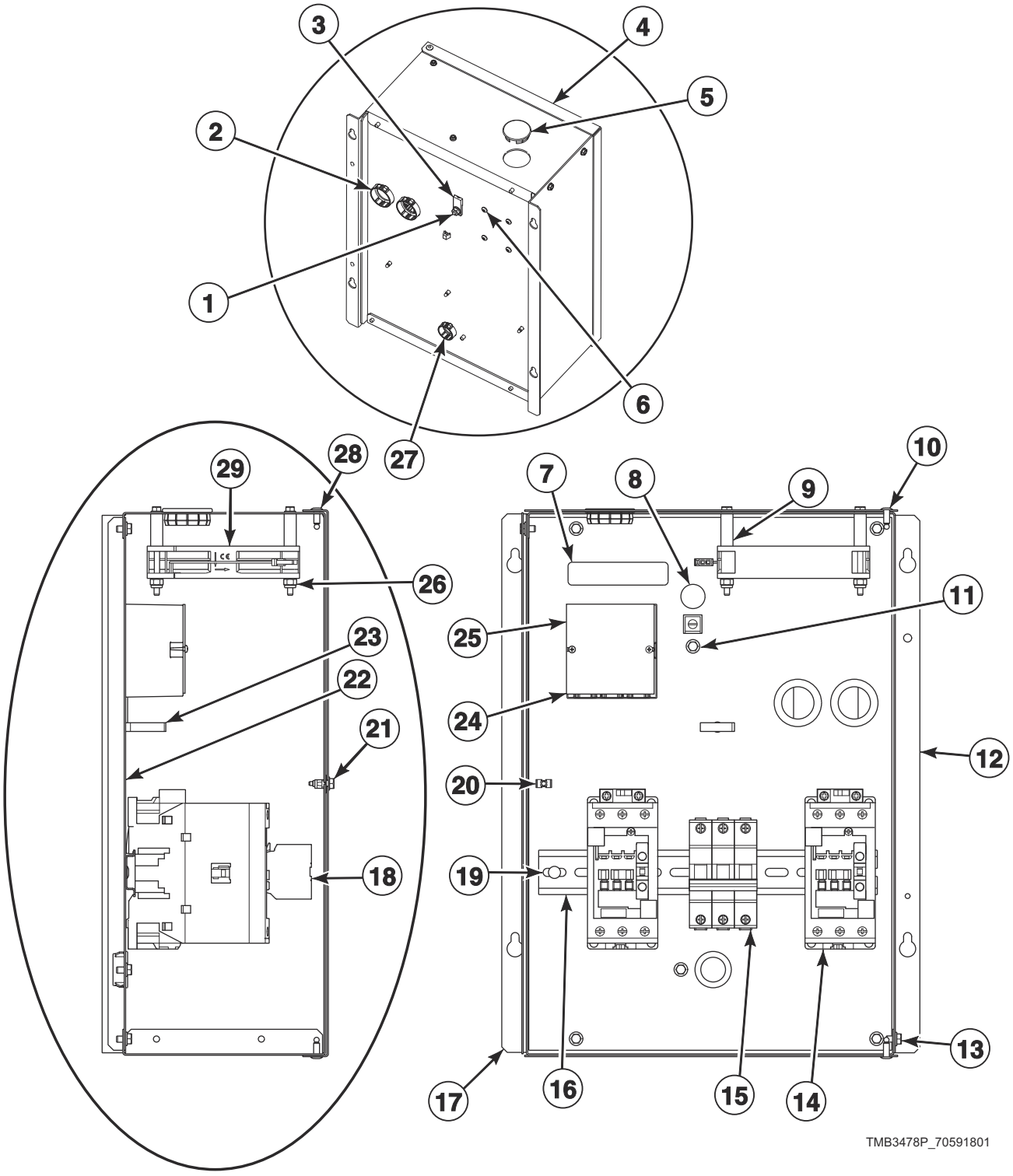

© Copyright, Alliance Laundry Systems LLC – DO NOT COPY or TRANSMIT

Accessory Box - Electric 380-480 Volt Models

REF	PART NO.	DESCRIPTION	COMMENTS
	44309004	Harness	North America models; Power distribution block to control circuit breaker
	44309014	Harness	IEC models; Power distribution block to control circuit breaker
1	44088001	Nut	
2	M402542	Snap Bushing	2 required
3	M411283	Ground Lug Connector	
4	44134004	Contactor Box Cover	
5	70180001	Plug	
6	39733	Screw	
7	44286803	Label	
8	D516100	Label	
9	44328601	Sleeve	2 required
10	70058502	Pop Rivet	
11	685837	Screw	
12	44292501	Contactor Box Side	Top
13	51780	Screw	
14	70482801	Contactor	2 required
15	70488101	Circuit Breaker	
16	44229701	DIN Rail	
17	44292401	Contactor Box Side	Bottom
18	44313201	Auxiliary Contact Block	2 required
19	70058501	Pop Rivet	
20	70030501	Expansion Clip	
21	F8206901	Screw	
22	44292601	Contactor Box Base Plate	
23	F8449502	Wire Clip	
24	M413865	Power Distribution Block	
25	44014901P	Power Distribution Block Cover	
26	F430232	Nut	
27	F140938	Snap Bushing	
28	70546902	Screw	
29	F8504301	Fan	

© Copyright, Alliance Laundry Systems LLC – DO NOT COPY or TRANSMIT

Harnesses

PART NO.	DESCRIPTION	COMMENTS
44316007	Harness	1 Phase
44316008	Harness	3 Phase
44280007	Configuration Harness	120 Volt; Cylinder
44280006	Configuration Harness	120 Volt; Fan
44334308	Contactor Coil Harness	Electric models
44334303	Control Harness	Electric models; 1 Phase
44334304	Control Harness	Electric models; 3 Phase
44356404	Control Tray Harness Assembly	Electric models
44356408	Control Tray Harness Assembly	Steam models
44356403	Control Tray Harness Assembly	Gas models
44334702	Inverter Contactor Coil Harness	Secondary
44281705	Jumper Harness	
44316001	Harness	1 Phase
44316002	Harness	3 Phase
44280010	Motor Contactor Power Harness	1 Phase; EMI
44280012	Motor Contactor Power Harness	3 Phase; EMI
44280001	Motor Contactor Power Harness	1 Phase
44280003	Motor Contactor Power Harness	3 Phase
44280101	Power Harness	
44272101	Power Harness	

© Copyright, Alliance Laundry Systems LLC – DO NOT COPY or TRANSMIT

Labels

PART NO.	DESCRIPTION	COMMENTS
44324201	Caution Label	Australian models; Repeat Ignition Reset
44318601	Caution Label	Vent/install
F8614501	Danger Label	Shock; English/French
F8614301	Hot Surface Warning Label	English/French
F8609001	Hot Surface Warning Label	Icon
F8611601	Warning Label	
44318600	Label Kit	Vent/install
F8614500	Label Kit	Shock
F8611600	Warning Label Kit	
44321501	Notice Label	120/240 Volt
70539601	Notice Label	
70534201	Notice Label	
F8609501	Notice Label	
D516073	Notice Label	Read instructions; Icon
70538401	Pinch Warning Label	English/French
F8615701	Pinch Warning Label	Icon
70536401	Warning Label	Lint; Australian models
44324101	Warning Label	Fire; Australian models
44321601	Warning Label	Risk of fire; Icon
44324001	Warning Label	Shock/pinch

© Copyright, Alliance Laundry Systems LLC – DO NOT COPY or TRANSMIT

Notes

© Copyright, Alliance Laundry Systems LLC – DO NOT COPY or TRANSMIT

Parts Index

A

Access Panel Trim
70399402 45

Adapter
44178801 77

Air Exhaust Deflector
44308401 73

Air Filter
44104201 83

Airflow Switch and Arm Bracket
70319602 75

Airflow Switch Arm
70319401 75

Airflow Switch Assembly
70429602 75

Airflow Switch Vane
70319202 75

App Pay Overlay Kit
44374701 ..... 21, 23

Auxiliary Contact Block
44313201 ..... 87, 89

B

Baffle
44304601 53
44304701 53
44304702 53

Ball Bearing
44041901P 67, 71

Bearing
M413923P 67, 71

Belt Guard
44298401 55
44314301 55
44332201 55

Belt Guard Side Panel
44298301 55
44301101 55

Blower Assembly
70302201P 73

Blower Housing Scroll
44303801 73

Blower Inlet Cone
70303101 73

Blower Motor Mounting Plate
70380801 73

Bolt
M400650 ..... 67, 71

Bottom Pan
44304301 53

Burner Assembly
M410541P 77

Burner Orifice
M401001 79
70684103 79
70684104 79
70684105 79
70684106 79
70684107 79
70684108 79
70684109 79
70684110 79
70684113 79
70684130 79
70684132 79
70684134 79
70684138 79

Burner Support
44110201 77

Bushing
70346501 85

Bypass Harness
44334103 ..... 39, 53

C

Cable Tie
70335601 85

Caution Label
44318601 91
44324201 91

Center Hinge Lug Assembly
70640401 63

Center Pan
44304201 53

Central Pay Board Harness
44355604 35

Central Pay Harness
44342801 21
44355602 35
44355605 35

Central Pay Kit
44359001 35
44359003 35

Circuit Breaker
70488101 89
70488102 87
70488105 87

Circuit Plug Housing, 1
26302 69

Coil
F8514601P 83
F8514701 83

Coin Box
F160673 53

Coin Chute Assembly
70296401 53

Coin Drop
38963P 31
70441601 31
70441603 31

Coin Drop Assembly
201141 31
210195 31
210196 31
38462P 31
38463 31
38467 31

N/A items do not appear in index.

© Copyright, Alliance Laundry Systems LLC – DO NOT COPY or TRANSMIT

38519 31
70281102 31
70283102 31
70441602 31
70447301 31
70471601 31
70482401 31
70506901 31

Coin Drop Kit
CK077 31
CK097 31
CK122 33

Coin Identification Paper
38464P 31
38475 31
38725 31

Coin Meter
F0160737-00 31

Coin Vault and Emergency Stop Mount Assembly
70529502 53

Coin Vault Assembly
70529501 53

Coin Vault Switch Harness
44334101 ..... 39, 53

Cold Weather Kit
44340301 17

Configuration Harness
44280006 90
44280007 90

Contact Base
F8538101 37

Contact Switch
F8069501 37

Contactor
70482601 85
70482801 ..... 87, 89

Contactor Box Base Plate
44292601 ..... 87, 89

Contactor Box Cover
44134004 ..... 87, 89

Contactor Box Side
44292401 ..... 87, 89
44292501 ..... 87, 89

Contactor Coil Harness
44334308 90

Control
70511601 17

Control Assembly
70478803P 21, 23
70478804 27
70478903 23
70478904 27
70479801 19
70479901 19
70523003 23
70523004 27
70523101 19
70543104 29

Control Board Control Tray
70494901 85

Control Box Assembly
44180101 15

Control Box Base
44065301 17

Control Box Cover
44065201 17

Control Box Housing
44306701 17

Control Box Top
44307101 17

Control Door and Studs Assembly
70570201 29

Control Door Latch
431318 53

Control Harness
44334303 90
44334304 90
44334404 17

Control Panel
44000122*P 41
44000125 41
44000130DG 41
44040005* 41
44040008B 41
44040011* 41
44040013 41
44040014 41
44040015LG 41
44367103 43
44367106W 43
44368001 43
44368002 43
44368003W 43
44368004W 43

Control Plate
70497101 ..... 19, 27

Control Plate and Studs Assembly
70496601 ..... 21, 23

Control Plate Assembly
70497201 ..... 21, 23

Control Tray
70492401 85

Control Tray Cover
70507501 55

Control Tray Harness Assembly
44356403 90
44356404 90
44356408 90

Control Trim
44016401 39
70529401 39

Conversion Kit
70559302 85

Cylinder and Trunnion Assembly
44195601 65
44195602 65
44195603 65
44195605P 65
44195606 65
44195607 65

Cylinder Assembly
44130802 65
44196301 65
44196302 65
44196303 65

Cylinder Kit
44057001P 65
44057101P 65

Cylinder Rib
M403002 65

N/A items do not appear in index.

© Copyright, Alliance Laundry Systems LLC – DO NOT COPY or TRANSMIT

44076201 65
Cylinder Rib Assembly
44191201 65

D

Damper Assembly
44280301 73
Danger Label
F8614501 91
DIN Rail
M412690 85
44229701 ..... 87, 89
DIN Valve Adapter Kit
F8382301 83
Direct Air Kit
44355101P 77, 81
Door Assembly
44028906P 57
44028907P 57
44028908 57
44058105P 57
44058106P 57
44058107P 57
44058108 57
44266701P 57
44266702P 57
44292302B 57
44292302LGP 57
44354701 57
44354702 57
44354703 57
44354704 57
44354705 57
44354706 57
44354707 57
44354708 57
70407402P 57
Door Catch Kit
70482901 39
Door Glass
44008401P 59
44008402P 59
44008403 59
44008404 59
44008405 59
Door Glass Installation Tool
M4221P4 59
Door Glass Label
70650401 59
70707701 59
Door Handle
44007901 59
44263801 59
44370601 59
70521102 59
Door Hinge Assembly
44075203* 61
44075208B 61
44075208LG 61
44075211 61
44366602LG 63
44366604 63
44366608 63
Door Hinge Lug Assembly
44035001 61
44035002 61
Door HingecAssembly
44366606W 63
Door Latch
M401223 39
Door Ring and Handle Assembly
44326007B 59
44326007LG 59
Door Ring Assembly
44326001 59
44326002 59
44326003B 59
44326004B 59
44326005 59
44326006 59
Door Ring Gasket
44008201P 59
70296802 59
Door Seal Kit
70211902P 59
Door Switch Actuator Kit
70215001P 61
Door Switch Harness
44335202 39
Drive Motor
44259501P 71
44259601P 71
Drive Rivet
M400713 17

E

Elbow
70079601 77
Electric Stove Assembly
44252501 81
Electric Wrap
44327302 81
Electronic Coin Drop Assembly
70294107 31
70513302 31
70513303 31
70513304 31
70513306 31
70513309 31
70513310 31
70513311 31
70513312 31
70513313 31
70513314 31
70513315 31
70513316 31
70513318 31
Electronic Coin Drop Kit
CK099 33
CK100 33
CK101 33
CK109 33
CK110 33
CK113 33
CK115 33
CK116 33
CK117 33

N/A items do not appear in index.

© Copyright, Alliance Laundry Systems LLC – DO NOT COPY or TRANSMIT

CK118 33
CK119 33
CK120 33
CK121 33
CK125 33
Emergency Stop Button Kit
70580301 37
Emergency Stop Bypass Harness
F8519403 37
Emergency Stop Harness
44272401 37
Emergency Stop Interconnect Harness
44272106 37
Emergency Stop Label
44012901 37
44012903 37
Emergency Stop Mounting Bracket
70550401 37
Emergency Stop Pushbutton
F200233500 37
EMI Filter
F8591601 85
F8637501 85
EMI Filter Kit
44357401 85
44357402 85
End Stop
F8449801 ..... 85, 87
Ethernet Gateway Kit
NK320 35
Exhaust Pipe Assembly
44327901 73
Expansion Clip
70030501 ..... 21, 23, 35, 39, 85, 87, 89
Extension Spring
F8440701 71

F

Fan
F8504301 ..... 87, 89
Fan Motor
70478701P 73
70484901P 73
Fan Spacer
70599301 73
FCC-IC Label
F8613201 35
Felt Pad
M402144 65
Fill Hose
202799 17
202800 17
Filter
44172001 83
Filter Bracket
70533101 85
Filter Mounting Plate
70551701 17
Fob Communication Harness
F8719301 23
Fob Reader Control Assembly
205135 23
Fob Reader Kit
70666806 35
Front Panel
44052517DG 45
44052517LG 45
44052520DG 45
44052520W 45
44052522 45
44052525* 45
44052526DG 45
44052527 45
44052529 45
44052530DG 45
44052530LG 45
44052530W 45
44367401W 47
44367403 47
44367405W 47
44367406 47
44367407W 47
44367408LG 47
44367409 47
Front Panel Assembly
44077905WP 45
44077919 45

G

Gas Stove Assembly
44136004 77
Gas Valve
44154501P 77
44154502P 77
44154505 77
44154506 77
44178301P 77
44178302P 77
44298501 77
44298504 77
Gas Valve Bracket
44175703 77
Gas Valve Harness
44273501 77
44273502 77
Gasket
70289101P 49
Ground Lug Connector
M411283 ..... 85, 87, 89
Guard Panel
44269201 55
44269202 55
44332301 55

H

Handle and Caps Assembly
70154405P 49
70154415 49
Handle Bar
70399501B 59
Handle Bumper
70407202 49
70407210 49

N/A items do not appear in index.

© Copyright, Alliance Laundry Systems LLC – DO NOT COPY or TRANSMIT

Harness
F8617901 29
44281701 87
44281703 87
44281706 ..... 81, 87
44281707 87
44309003 87
44309004 89
44309013 87
44309014 89
44316002 90
44316007 90
44316008 90
Harness Adapter Plate
70523301 17
Harness Mounting Plate
70307007 ..... 15, 35
Harness Strap
55881 69
Heat Exchanger
70500401 ..... 77, 81
Heater Element
M410939P 81
M410940P 81
M410941P 81
M412955P 81
Heating Element Screen
44308801 81
High Altitude Orifice Kit
44357501 79
44357502 79
High Voltage Suppression Cable
44239705 77
Hinge Cam Kit
M4772P3 61
M4773P3 61
Hold-Down Clip
35865 51
Hose
44073304 17
Hose Clamp
36801 17
Hose Fitting
44069101 17
Hot Surface Warning Label
F8609001 91
F8614301 91
Housing and Trunnion Assembly
M4644P3 67
44336302 67

I

Idler Shaft
44303102 71
Idler Spacer
44306801 71
Igniter Cover
70159601 77
Ignition Control
70482001 85
70482002P 85
Insulation
44150102 53
44150103 53
Insulator
M413862 85
Interconnect Harness
44334401 17
Inverter Contactor Coil Harness
44334702 90
Inverter Motor Harness
44335304 71
44335305 73
I/O Control Assembly
70671701 85

J

Jumper Harness
D511476 39
44281705 90
44281708 81
44281709 81
Jumper Strip
M400869 81

K

Key
M400008 ..... 65, 71
44309301 71
70155601 ..... 17, 39
70155602 39
Kickplate
70117607 49
70117619 49

L

Label
D503887 77
D516100 ..... 85, 87, 89
44190901 45
44286801 85
44286803 ..... 85, 87, 89
44318201 17
70414001 59
70537001 ..... 45, 47
70537101 45
Label Kit
F8614500 91
44318200 17
44318600 91
44324500 17
70534400 45
Lanyard Cable
F8521303 43
Latch Mounting Bracket
44003201 53
Light
801432 17
Limit Offset Bracket
44226101 81

N/A items do not appear in index.

© Copyright, Alliance Laundry Systems LLC – DO NOT COPY or TRANSMIT

Limit Thermostat
44328003 73
44328006 81
44328007 77
70530905 73
Lint Bracket
44325301 51
Lint Clip Bracket
44140202 51
Lint Panel
44293602 49
44293603LG 49
44293603W 49
44293604DG 49
44293604W 49
44293605 49
44298102 51
44300901 51
Lint Screen
44063601 51
Lint Screen Clip
H96418413 51
Lint Screen Top Rail
44298901 51
Lock, Key and Nut Kit
44089302P 39
70733701 ..... 17, 39
Low Pressure Steam Cover
M400828 83
Lower Hinge Gusset
70632002 63
Lower Lug Assembly
70639302 63
Lower Rear Panel
44300001 53
Lug Mount Bracket
70634301 47
L.P. Conversion Kit
44328801 77
44330301 77

M

Machine ID Control Assembly
203361P 21, 23, 27, 29
Magnet
70343101 49
Magnet Bracket
44290501 49
Main Harness
44316001 90
44334201 15
Male Tab Terminal
00621SG 85
Max Fill Line Label
70707501 59
Micro V Pulley
44270201 71
Mixing Valve
70519801 17
Mixing Valve Shield Bracket
44306601 17
Moisture Sensing Harness Kit
44344702 69
Moisture Sensor Harness
44333902 69
Motor Conduit Bracket
44317901 ..... 71, 73
Motor Contactor Power Harness
44280001 90
44280003 90
44280010 90
44280012 90
Motor Pivot Bracket Weldment
44327001 71
Motor Pivot Gusset Bracket
44325701 71
Motor Pivot Plate Weldment
44311501 71
Motor Pivot Support Bracket
44325801 71
Motor Pulley
70559102 71
Mount Bracket
44308701 17
Mounting Plate
70208801 ..... 21, 23

N

Nameplate
F8443106 41
F8688001 41
F8688901 ..... 41, 43
44010601 41
567887 41
70541801 41
Nameplate Bezel
70117401 41
Nameplate Overlay
44130301 41
44144401 41
70410201 41
70411401 41
Nipple
F421921 77
Notice Label
D516073 91
F8609501 91
44321501 91
70534201 91
70539501 77
70539601 91
Notice label
70544901 77
Nut
F430232 ..... 87, 89
M400022 73
M400026 ..... 67, 71
M400033 ..... 69, 71
M400977 ..... 39, 41
M404993 65
M414215 59
21899 53
23951 49
36020 83

N/A items do not appear in index.

© Copyright, Alliance Laundry Systems LLC – DO NOT COPY or TRANSMIT

44071201 29
44088001 ..... 59, 61, 63, 85, 87, 89
44333202 71
51236 49
70030401 47
70054 ..... 23, 81

O

Opto Coupler
200674P 31

Overlay
F8205101 ..... 21, 23
F8696101 ..... 21, 23
F8696201 23
F8696301 ..... 21, 23
F8733901 23
F8734201 23
F8736501 23
70295101 23
70512004 25
70512005 25
70512006 25
70512007 25
70512008 25
70516801 19
70516802 19
70517001 25
70517002 25
70517003 25
70517004 25
70517005 25
70517801 19
70517802 19
70518101 23
70518102 23
70518201 25
70518202 25
70518203 25
70519001 19
70519002 19
70539101 19
70539102 19
70541201 25
70541202 25
70541203 25
70544701 21
70544702 21
70544703 21
70545501 19
70545502 19
70547401 21
70547402 21
70547501 19
70547502 19
70547801 27
70547802 27
70548101 21
70548801 27
70548802 27
70556201 23
70556301 23
70556401 23
70556402 23
70556501 ..... 21, 23
70556502 ..... 21, 23
70556601 23
70556701 23
70556801 23
70556901 23
70557001 ..... 21, 23
70557002 ..... 21, 23
70559001 25
70570301 21
70570302 21
70570303 21
70570601 27
70570602 27
70570801 27
70570802 27
70571001 25
70571002 25
70571003 25
70571101 25
70571102 25
70571103 25
70571401 27
70571402 27
70571601 27
70571602 27
70572401 27
70572402 27
70572601 25
70595401 29
70626001 25
70626002 25
70626101 25
70626301 25
70626302 25
70626303 25
70636101 21
70636102 21
70636103 21
70636201 25
70636202 25
70636203 25
70636204 25
70636205 25
70636302 25
70636303 25
70636401 27
70636402 27
70636501 19
70636502 19
70637601 25
70637602 25
70637603 25
70637604 25
70637605 25
70638201 21
70638202 21
70638203 21
70638301 27
70638302 27
70638701 19
70638702 19
70638801 19
70638802 19
70638901 27
70638902 27
70639001 29
70645601 23
70645701 23
70645801 23
70645901 23
70646001 ..... 21, 23

N/A items do not appear in index.

© Copyright, Alliance Laundry Systems LLC – DO NOT COPY or TRANSMIT

70646002 ..... 21, 23
70646101 23
70646102 23

P

Panel Locator
56079 ..... 39, 49
Panel Lock
44089304 39
44089305 39
Pinch Warning Label
F8615701 91
70538401 91
Pipe Bracket
44327601 55
Pipe Nipple
431486 77
70210201 77
70612601 77
70612602 77
70612603 77
Pipe Tee
44231902 77
Plug
70167601 77
70180001 ..... 17, 87, 89
Pop Rivet
M400003 ..... 39, 53, 85
70058501 ..... 47, 49, 53, 61, 63, 85, 87, 89
70058502 ..... 87, 89
70126301 49
70126401 49
70412601 59
Porcelain Touch-Up Paint
122P4P 53
370P4P 53
Power Distribution Block
M413865 ..... 87, 89
Power Distribution Block Cover
44014901P 87, 89
Power Harness
44272101 90
44280101 90
Power Sensor Harness
44334402 17
Pressure Fitting
44231601 77
Pulley
44289502 71
Pushbutton Switch
70413301 ..... 19, 21, 23, 27, 39
Push-to-Start Switch
801434W 17

R

Rear Access Plate
44136101 77
Reed Switch Assembly
F8066804 49
Rib Rod
M401411 65
RIb Wire
44208601 69
Rivet
70743501 49
Roller Bracket Assembly
70404001 49
Roller Catch Arm
70030301 49
Roller Catch Spacer
70030201 49
Roller Catch Wheel
70297601 49

S

Screw
F8206901 ..... 35, 85, 87, 89
M400063 67
M400661 59
M402797 77
M411072 ..... 21, 23, 39
23008 83
33562 ..... 29, 81
39733 ..... 49, 87, 89
430497 ..... 15, 17, 53, 75, 77, 81
430757 ..... 49, 75
431287 53
44338901 69
44349101 ..... 61, 63
51780 ..... 17, 35, 53, 87, 89
51783 85
685837 ..... 85, 87, 89
70033502 ..... 39, 61
70072801 49
70132301 49
70182601 ..... 39, 47
70187201 ..... 67, 71
70240301 ..... 77, 81
70247701 53
70275801 39
70409801 61
70442101 ..... 59, 61, 69
70546902 ..... 87, 89
70640201 63
70640301 63
802822 63
804608 ..... 17, 19, 21, 23, 27, 29
805213 71
Sensor Harness
44334406 17
Shaft Collar
70467001 71
Shaft Wire
44208702 69
Shield
44326801 17
Shock Warning Label
F8614201 17
F8614401 17
Side Panel
44304401DG 53
44304401LG 53
44304401* 53

N/A items do not appear in index.

© Copyright, Alliance Laundry Systems LLC – DO NOT COPY or TRANSMIT

44304501DG 53
44304501LG 53
44304501* 53
44367501LG 53
44367501W 53
44367601LG 53
44367601W 53
Sleeve
44328601 ..... 87, 89
Slip Ring Assembly
44222702 69
Slip Ring Holder
44224401 69
Slot Card Plate Assembly
44089501 ..... 21, 23
Snap Bushing
F140938 ..... 87, 89
M402542 ..... 87, 89
70178701 85
Spacer
M401402 65
Spark Electrode
44328701P 77
Spray Paint
298P4P 53
Spud Holder Weldment
44263101 77
Steam Adapter Kit
44314701 83
Steam Coil
M400637P 83
Steam Control Assembly
70501801 85
Steam Heater Assembly
44020401P 83
44020402 83
Steam Stand Box
44007501 83
Steam Valve
F8322904P 83
Steam Valve Harness
F8520703 83
Stove Grate
44300301 55
44300302 55
44335601 55
Stove Limit Bypass Harness
70564302 83
Stove Limit Harness
70564304 ..... 77, 81
Strain Relief
44304801 83
Street Elbow
70612501 77
Switch
70411901 75
Switch Bracket
44296101 49
Switch Hole Plug
44057801B 39
44057801LG 39
44057801Q 39
44057801W 39

T

Terminal
00622SG 85
Terminal Block
430642 85
Terminal Block Shield
70333001 85
Thermistor
M414704 73
44064701 53
Thermistor Plate
44068101 53
44068102 53
Top Cover
44139301 53
Top Cover Pan
44135001P 53
Top Pan
44304101 53
Top Panel Bracket
44368201 53
Transformer
F8491101 85
202757 ..... 35, 53
202758 ..... 35, 53
Transformer Harness
44272301 ..... 35, 53
44272302 ..... 35, 53
Trunnion and Bearing Assembly
M4640P3 67
44336301 67
Trunnion Assembly
44207901P 65
44208001P 65
44375001P 67
Trunnion Housing
M413826P 71
Tumbler Dolly Kit
M4379P4 39

U

Upper Hinge Gusset
70632001 63
Upper Lug Assembly
70639301 63
Upper Rear Panel
44297001 53
USB Bracket
70547001 29
USB Gateway Kit
NK330 35
USB IR Interface Kit
203346 35
USB-Serial Interface Assembly
203440 29

N/A items do not appear in index.

© Copyright, Alliance Laundry Systems LLC – DO NOT COPY or TRANSMIT

V

Valve
F8322906P 83

Valve Rebuild Kit
F8379502 83

V-Belt
44309402 71
44333301 71

Vend Activation Harness
44334004 ..... 19, 21, 23, 27

W

Warning Label
F8611601 91
44321601 91
44324001 91
44324101 91
44324501 17
44324502 17
70534401 ..... 45, 47
70534402 ..... 45, 47
70534405 ..... 45, 47
70536401 91

Warning Label Kit
F8611600 91

Washer
F431131 73
M400015 ..... 65, 67
20103 ..... 67, 71
44238902 69
70261401 ..... 67, 71
70409301 59

Water Valve Harness
44334405 17

Wire Clip
F8449501 85
F8449502 ..... 85, 87, 89

Wire Guard
201595P 31

Wire Label
44286802 ..... 85, 87
44286804 85

Wireless Control Label
204692 35

Wireless Network Board Harness
F8536002 35

Wireless Network Control Assembly
203532 35
807211 35

Wireless Network Harness
F8674006 35

Wireless Network Kit
70596301 35
70609701 35

Wireway Channel
44239101 69

N/A items do not appear in index.

© Copyright, Alliance Laundry Systems LLC – DO NOT COPY or TRANSMIT