Tumble Dryers

75 Pound Capacity

18 Digit Model Numbers with 3 and 5 in 13th Position

Refer to Page 5 for Model Numbers

Parts

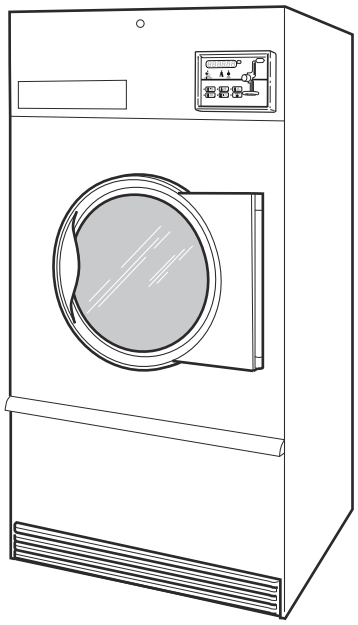

TMB1284C_70591901

Alliance™ Laundry Systems

www.alliancelaundry.com

Part No. 70591901R12
September 2025

Table of Contents

Title	Page
Parts Ordering Information	3
Serial Plate Location	3
Machine Identification	5
Product Overview - Heat Source and Voltage	6
Product Overview - FN Control Suffix	8
Product Overview - DN and NN Control Suffixes	10
Product Overview - B, N and W Control Suffixes	12
Control Box	14
Fire Suppression System Control Box	16
Dual Digital Control	18
Electronic Display Control - Vend Models with B in the 7th Position	20
Electronic Display Control - Vend Models with N or W in the 7th Position	22
Electronic Display Control Overlays- Vend Models with N or W in the 7th Position	24
Electronic Display Control - OPL Models with N in the 7th Position	26
3.5 Inch Graphical Control	28
Coin Drops	30
Coin Drop Kits	32
Network Board, Central Pay and Card Reader Components	34
Emergency Stop Button - OPL Models	36
Cabinet Front Components	38
Cabinet Panels and Nameplates	40
Cabinet Panels and Nameplates - Design 5 S Models	42
Front Panel Assemblies - Design 3 Models	44
Front Panel Assemblies - Design 5 Models	46
Lower Cabinet Front Components	48
Lint Panel Components	50
Cabinet Components	52
Rear Panel and Belt Guard Components	54
Door Assemblies	56
Door Components	58
Hinge Components - Design 3 Models	60
Hinge Components - Design 5 Models	62
Cylinder and Trunnion Components	64
Bearing Components	66
Moisture Sensing Components	68
Drive Motor Components	70
Blower and Exhaust Components	72
Airflow Switch Assembly	74
Gas Heater Components	76
Burner Orifices	78
Electric Heater Components	80

© Copyright 2025, Alliance Laundry Systems LLC

All rights reserved. No part of the contents of this book may be reproduced or transmitted in any form or by any means without the expressed written consent of the publisher.

Steam Heater and Valve 82
Control Tray 84
Accessory Box - Electric 200-240 Volt Models 86
Accessory Box - Electric 380-480 Volt Models 88
Harnesses 90
Labels 91
Parts Index 93

© Copyright, Alliance Laundry Systems LLC – DO NOT COPY or TRANSMIT

Parts Ordering Information

If literature or replacement parts are required, contact the source from whom the machine was purchased or contact Alliance Laundry Systems at (920) 748-3950 for the name and address of the nearest authorized parts distributor.

For technical assistance, call the number listed below:

(920) 748-3121 Ripon, Wisconsin

Serial Plate Location

When calling or writing about your product, be sure to mention model and serial numbers. Model and serial numbers are located on serial plate(s) as shown.

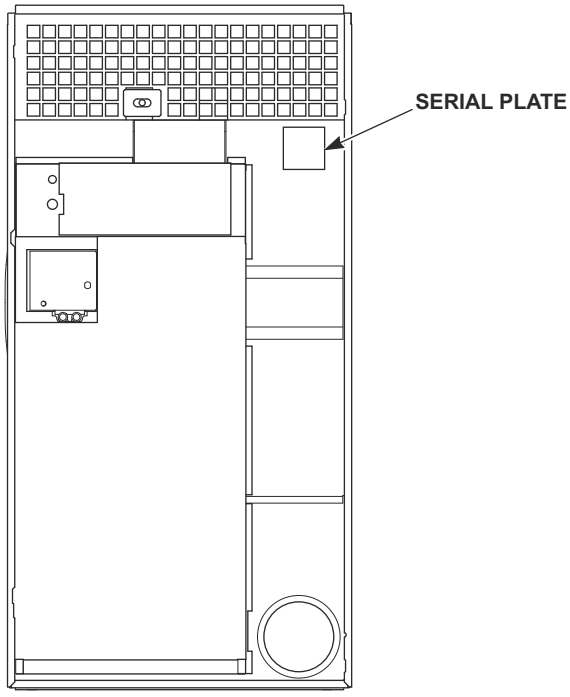

TMB2622N_70591901

© Copyright, Alliance Laundry Systems LLC – DO NOT COPY or TRANSMIT

Notes

© Copyright, Alliance Laundry Systems LLC – DO NOT COPY or TRANSMIT

Machine Identification

Information in this manual is applicable to these machines:

BA075E	HA075N	PA075E	SG075N	UG075E
BA075F	HA075R	PA075L	SG075R	UG075F
BA075L	HA075S	PA075M	SG075S	UG075L
BA075M	HG075D	PA075N	SH075E	UG075M
BA075N	HG075E	PA075S	SH075F	UG075N
BA075R	HG075F	PG075E	SH075L	UG075R
BA075S	HG075L	PG075L	SH075M	UG075S
BG075D	HG075M	PG075M	SH075N	UGF75L
BG075E	HG075N	PG075N	SH075R	UGF75N
BG075F	HG075R	PG075S	SH075S	UH075E
BG075L	HG075S	PH075E	SJ075D	UH075F
BG075M	HH075E	PH075L	SJ075E	UH075L
BG075N	HH075F	PH075M	SJ075F	UH075M
BG075R	HH075L	PH075N	SJ075L	UH075N
BG075S	HH075M	PH075S	SJ075M	UH075R
BH075E	HH075N	PJ075E	SJ075N	UH075S
BH075F	HH075R	PJ075L	SJ075R	UJ075D
BH075L	HH075S	PJ075M	SJ075S	UJ075E
BH075M	HJ075D	PJ075N	SK075E	UJ075F
BH075N	HJ075E	PJ075S	SK075F	UJ075L
BH075R	HJ075F	PK075E	SK075L	UJ075M
BH075S	HJ075L	PK075L	SK075N	UJ075N
BJ075D	HJ075M	PK075N	SK075R	UJ075R
BJ075E	HJ075N	PR075E	SR075E	UJ075S
BJ075F	HJ075R	PR075S	SR075S	UK075E
BJ075L	HJ075S	PT075C	ST075C	UK075F
BJ075M	HK075E	PT075E	ST075E	UK075L
BJ075N	HK075F	PT075L	ST075F	UK075N
BJ075R	HK075L	PT075M	ST075L	UK075R
BJ075S	HK075N	PT075N	ST075M	UR075E
BK075E	HK075R	PT075S	ST075N	UR075S
BK075F	HR075E	PU075E	ST075R	UT075C
BK075L	HR075S	PU075L	ST075S	UT075E
BK075N	HT075C	PU075M	SU075E	UT075F
BK075R	HT075E	PU075N	SU075F	UT075L
BR075E	HT075F	PU075S	SU075L	UT075M
BR075S	HT075L	SA075E	SU075M	UT075N
BU075E	HT075M	SA075F	SU075N	UT075R
BU075F	HT075N	SA075L	SU075R	UT075S
BU075L	HT075R	SA075M	SU075S	UTF75L
BU075M	HT075S	SA075N	UA075E	UTF75N
BU075N	HU075E	SA075R	UA075F	UU075E
BU075R	HU075F	SA075S	UA075L	UU075F
BU075S	HU075L	SG075D	UA075M	UU075L
HA075E	HU075M	SG075E	UA075N	UU075M
HA075F	HU075N	SG075F	UA075R	UU075N
HA075L	HU075R	SG075L	UA075S	UU075R
HA075M	HU075S	SG075M	UG075D	UU075S

© Copyright, Alliance Laundry Systems LLC – DO NOT COPY or TRANSMIT

Product Overview - Heat Source and Voltage

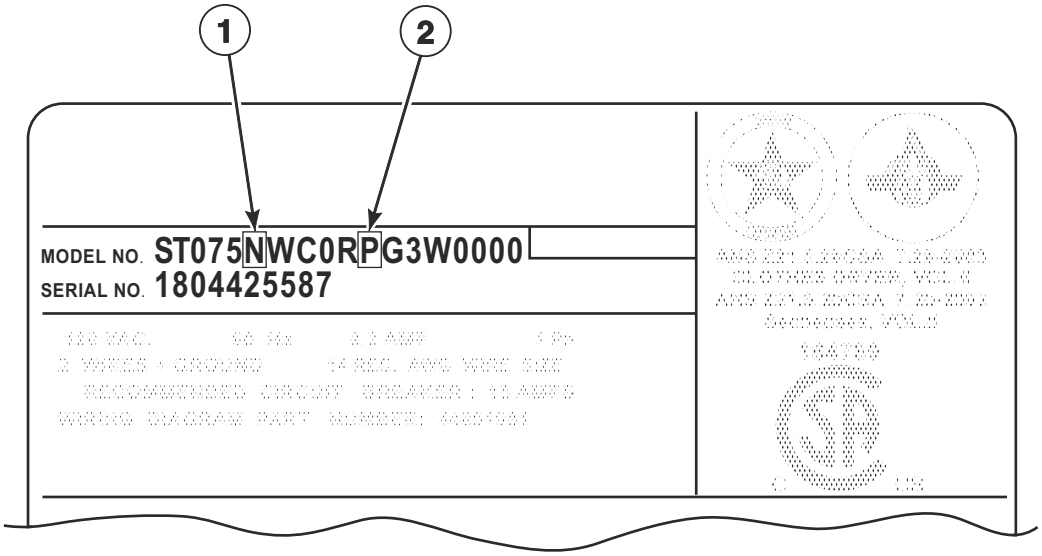

TMB3595P_70591901

© Copyright, Alliance Laundry Systems LLC – DO NOT COPY or TRANSMIT

Product Overview - Heat Source and Voltage

REF	PART NO.	DESCRIPTION	COMMENTS
1	-	Heat Source	C: Steam (CRN) D: Liquid Petroleum Gas (L.P.) E: Electric F: Reduced Electric (Eco Line) L: Liquid Petroleum Gas (L.P.) M: Medium Electric N: Natural Gas (N.G.) R: Reduced Gas, Natural Gas (Eco Line) S: Steam
2	-	Voltage	B:100-120 Volt/50-60 Hertz/1 Phase; Gas and steam models F: 200-208 Volt/50-60 Hertz/3 Phase; Electric models G: 230-240 Volt/50-60 Hertz/3 Phase; Electric models H: 380 Volt/50-60 Hertz/3 Phase; Electric models J: 400-415 Volt/50-60 Hertz/3 Phase; Electric models K: 440 Volt/50-60 Hertz/3 Phase; Electric models L: 460-480 Volt/50-60 Hertz/3 Phase; Electric models N: 440-480 Volt/50-60 Hertz/3 Phase; Gas and steam models P: 380-415 Volt/50-60 Hertz/3 Phase; Gas and steam models Q: 200-240 Volt/50-60 Hertz/3Phase; Gas and steam models X: 200-240 Volt/50-60 Hertz/1-3 Phase; Gas and steam models

© Copyright, Alliance Laundry Systems LLC – DO NOT COPY or TRANSMIT

Product Overview - FN Control Suffix

OPL

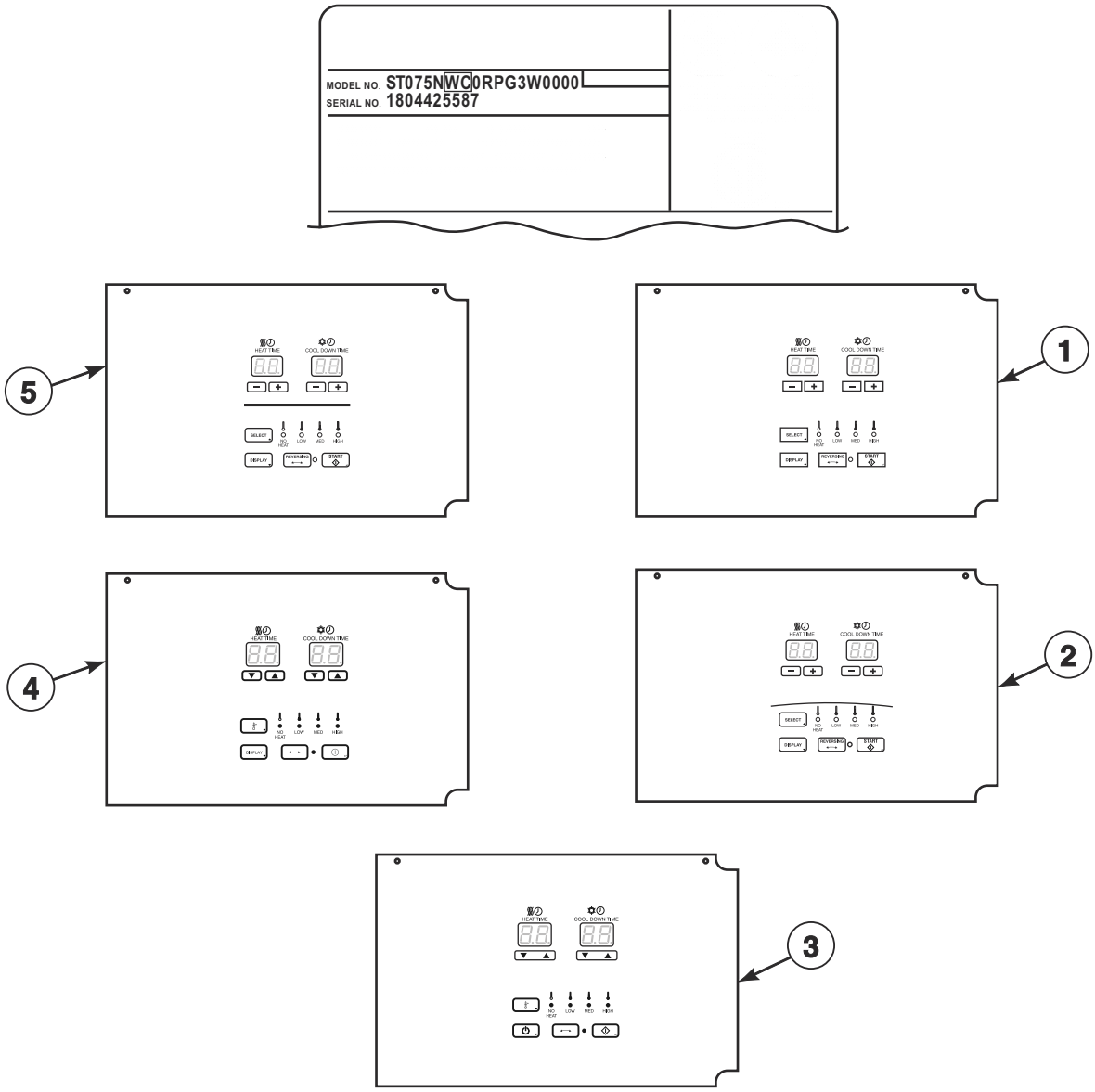

TMB3596P_70591901

© Copyright, Alliance Laundry Systems LLC – DO NOT COPY or TRANSMIT

Product Overview - FN Control Suffix

REF	PART NO.	DESCRIPTION	COMMENTS
1	-	Dual Digital Control	H models
2	-	Dual Digital Control	U models
3	-	Dual Digital Control	B models
4	-	Dual Digital Control	P models
5	-	Dual Digital Control	S models

© Copyright, Alliance Laundry Systems LLC – DO NOT COPY or TRANSMIT

Product Overview - DN and NN Control Suffixes

OPL

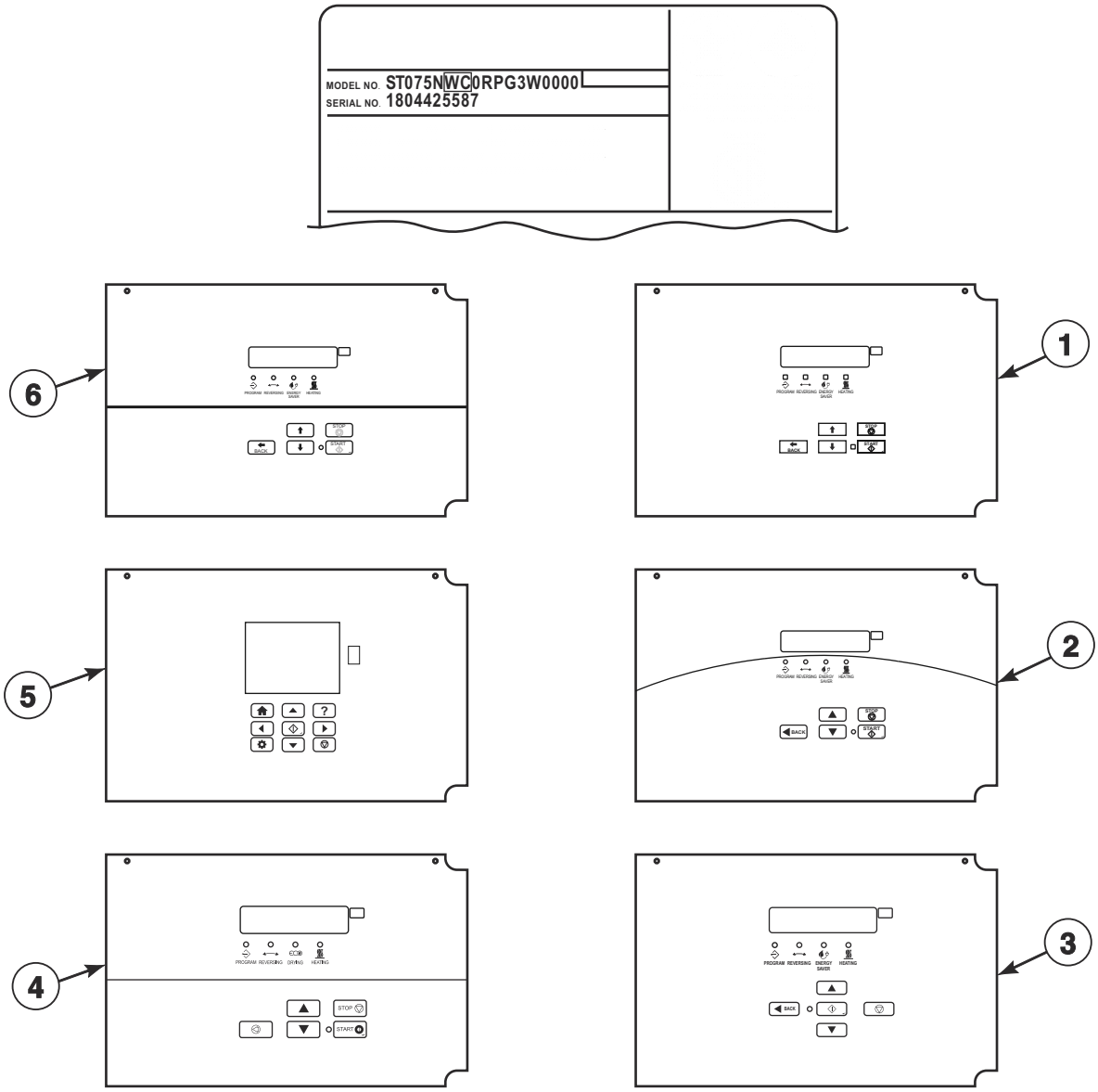

TMB3597P_70591901

© Copyright, Alliance Laundry Systems LLC – DO NOT COPY or TRANSMIT

Product Overview - DN and NN Control Suffixes

REF	PART NO.	DESCRIPTION	COMMENTS
1	-	Galaxy Control	H models
2	-	M-Series Control	U models
3	-	OPTimum Control	B models
4	-	OPL Micro Control	P models
5	-	UniLinc Control	U models
6	-	Quantum Gold Control	S models

© Copyright, Alliance Laundry Systems LLC – DO NOT COPY or TRANSMIT

Product Overview - B, N and W Control Suffixes

7th Position of the Model Number; Vend

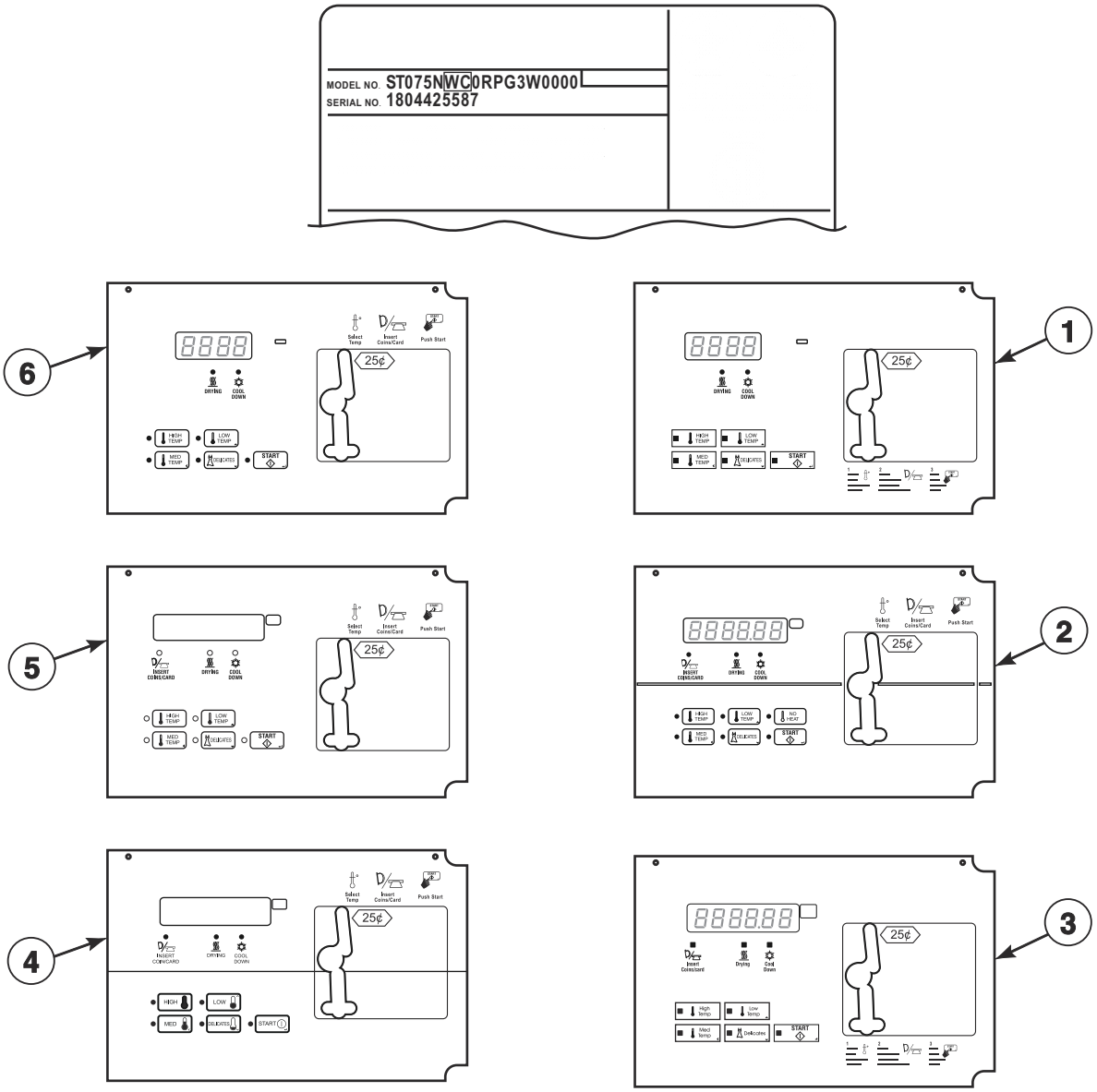

TMB3598P_70591901

© Copyright, Alliance Laundry Systems LLC – DO NOT COPY or TRANSMIT

Product Overview - B, N and W Control Suffixes

REF	PART NO.	DESCRIPTION	COMMENTS
1	-	Basic Electronic Control	H models
2	-	Quantum Gold Control	S models
3	-	Galaxy 600	H models
4	-	XQ Control	P models
5	-	EVO7S Control	B models
6	-	MDC II Control	S models

© Copyright, Alliance Laundry Systems LLC – DO NOT COPY or TRANSMIT

Control Box

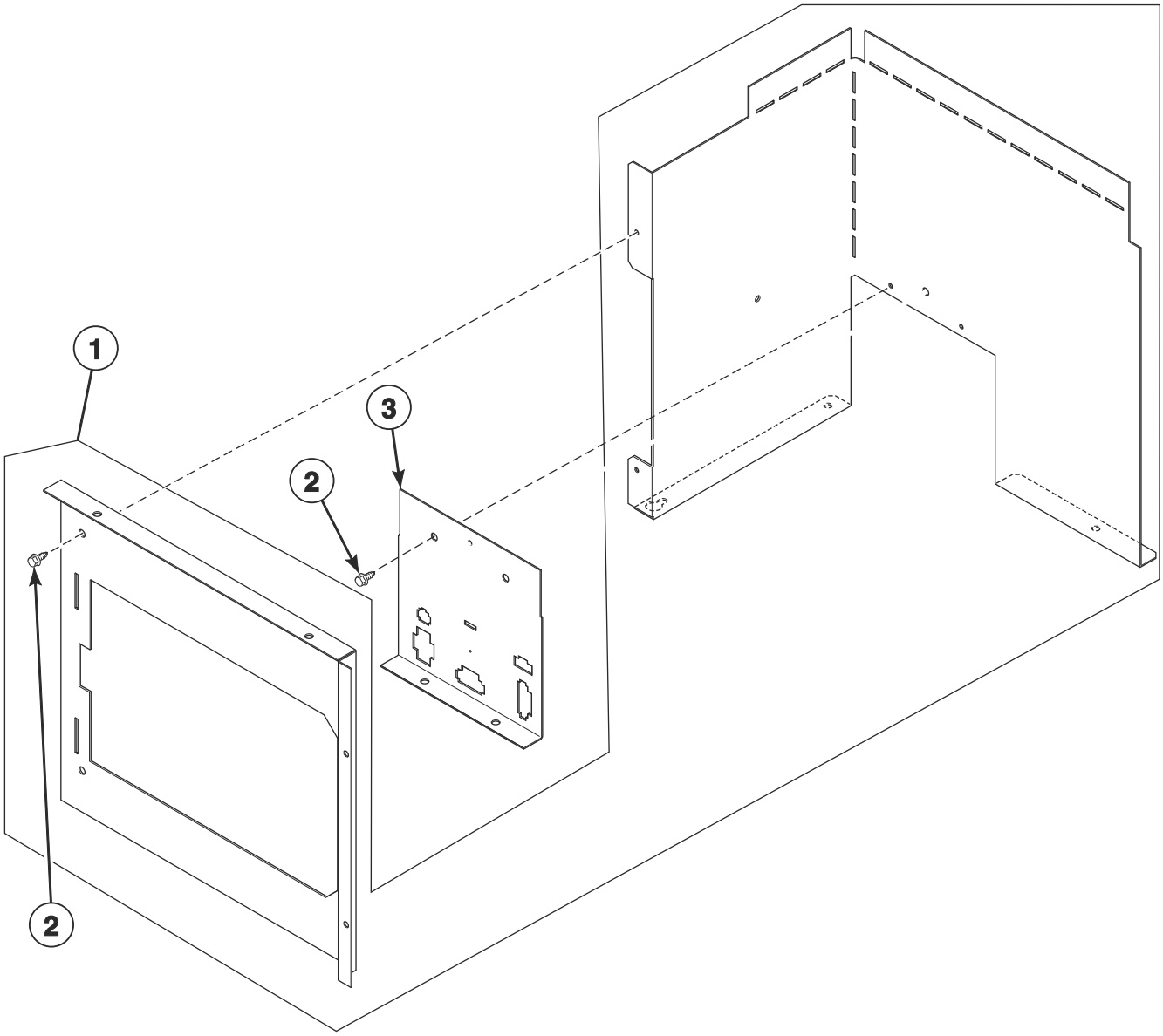

TMB3524P_70591901

© Copyright, Alliance Laundry Systems LLC – DO NOT COPY or TRANSMIT

Control Box

REF	PART NO.	DESCRIPTION	COMMENTS
	44334201	Main Harness	
1	44180101	Control Box Assembly	
2	430497	Screw	
3	70307007	Harness Mounting Plate	

© Copyright, Alliance Laundry Systems LLC – DO NOT COPY or TRANSMIT

Fire Suppression System Control Box

Gas and Steam Models

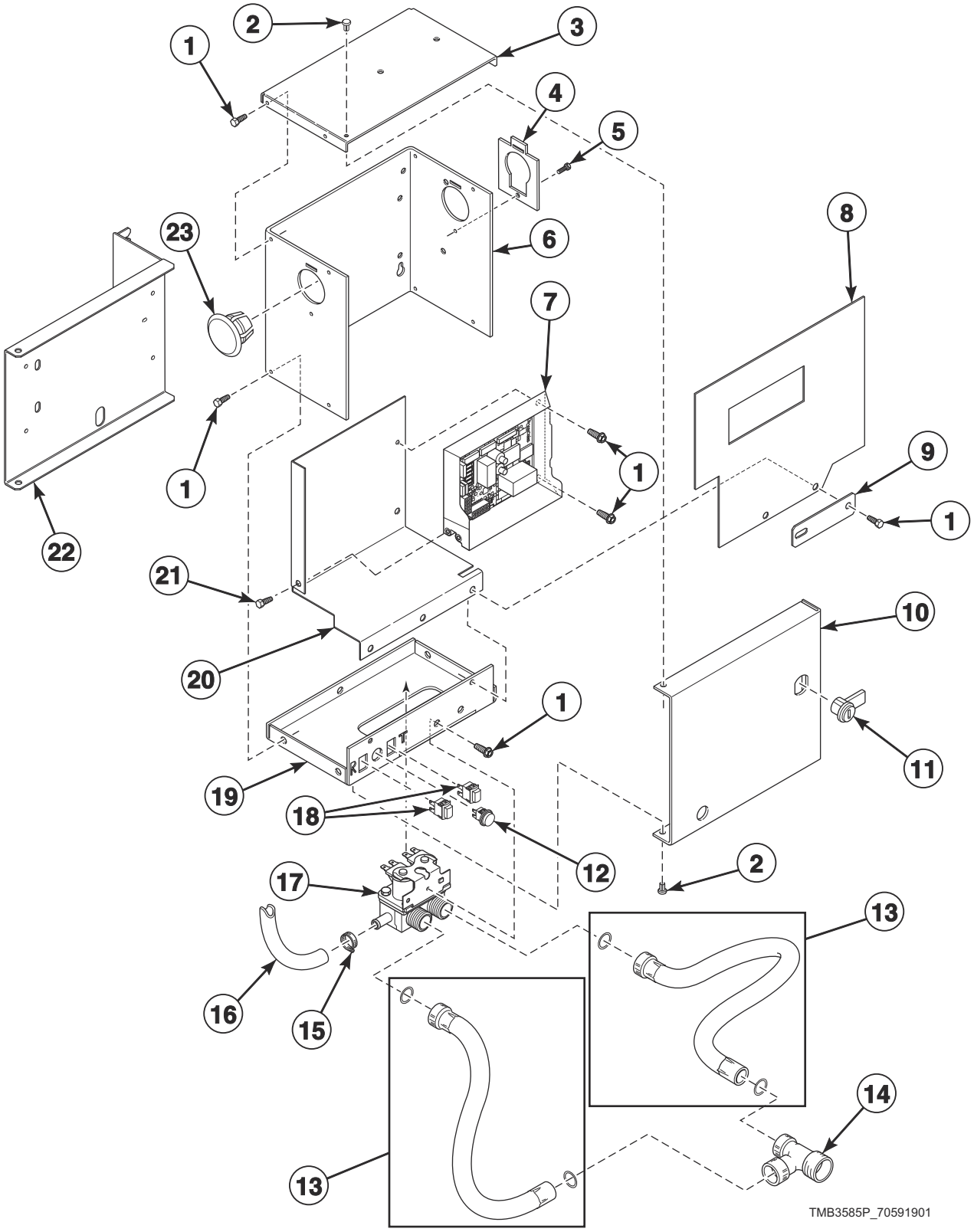

© Copyright, Alliance Laundry Systems LLC – DO NOT COPY or TRANSMIT

Fire Suppression System Control Box

REF	PART NO.	DESCRIPTION	COMMENTS
	44340301	Cold Weather Kit	
	70155601	Key	RL001; Use with item 11
	44334404	Control Harness	
	44334405	Water Valve Harness	
	44334402	Power Sensor Harness	
	44334406	Sensor Harness	
	44334401	Interconnect Harness	
	44324501	Warning Label	F.S.S.; CSA models
	44324500	Label Kit	F.S.S.; IEC models
	F8614401	Shock Warning Label	CSA models
	F8614201	Shock Warning Label	IEC models
	44318200	Label Kit	IEC models
	44324502	Warning Label	
	44318201	Label	CSA models
1	430497	Screw	
2	M400713	Drive Rivet	
3	44307101	Control Box Top	
4	70523301	Harness Adapter Plate	
5	51780	Screw	
6	44306701	Control Box Housing	
7	70511601	Control	
8	44326801	Shield	
9	70551701	Filter Mounting Plate	
10	44065201	Control Box Cover	
11	70733701	Lock, Key and Nut Kit	RL001 key code; Optional if same key is to be used for control lock
12	801432	Light	
13	202799	Fill Hose	2 required; GHT
	202800	Fill Hose	2 required; BSPP
14	44069101	Hose Fitting	CSA models
15	36801	Hose Clamp	
16	44073304	Hose	14 inches; Outlet hose
17	70519801	Mixing Valve	
18	801434W	Push-to-Start Switch	2 required
19	44065301	Control Box Base	
20	44306601	Mixing Valve Shield Bracket	
21	804608	Screw	
22	44308701	Mount Bracket	
23	70180001	Plug	

© Copyright, Alliance Laundry Systems LLC – DO NOT COPY or TRANSMIT

Dual Digital Control

Models with F in the 7th Position

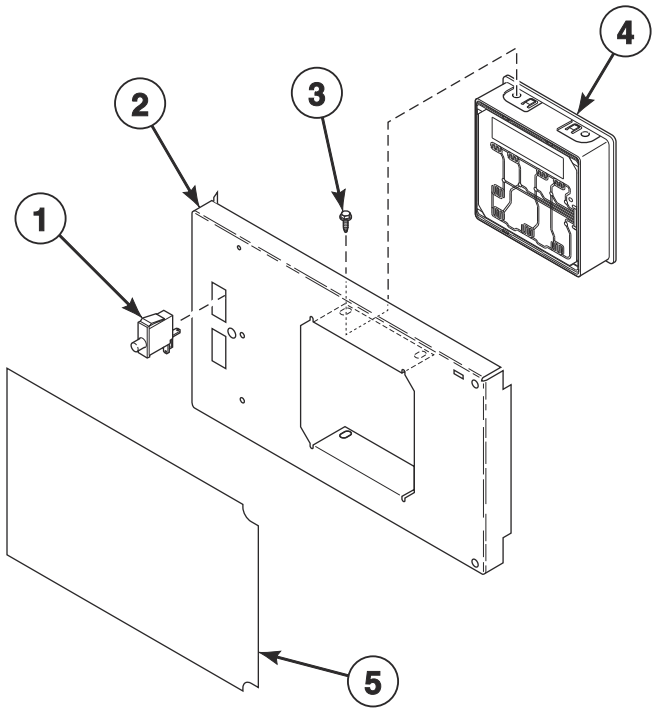

TMB3505P_70591901

© Copyright, Alliance Laundry Systems LLC – DO NOT COPY or TRANSMIT

Dual Digital Control

REF	PART NO.	DESCRIPTION	COMMENTS
	44334004	Vend Activation Harness	
1	70413301	Pushbutton Switch	
2	70497101	Control Plate	Design 3 and 5 H and U models; Design 3 S models; All other models
3	804608	Screw	4 required
4	70523101	Control Assembly	P models; Blue
	70479801	Control Assembly	H, S and U models; Green
	70479901	Control Assembly	B models; Red
5	70539102	Overlay	B models; Nonreversing
	70539101	Overlay	B models; Reversing
	70517802	Overlay	H models; Nonreversing; Design 3
	70517801	Overlay	H models; Reversing; Design 3
	70636502	Overlay	H models; Nonreversing; Design 5
	70636501	Overlay	H models; Reversing; Design 5
	70545502	Overlay	P models; Nonreversing
	70545501	Overlay	P models; Reversing
	70516802	Overlay	S models; Nonreversing; Design 3
	70516801	Overlay	S models; Reversing; Design 3
	70638702	Overlay	S models; Nonreversing; Design 5
	70638701	Overlay	S models; Reversing; Design 5
	70519002	Overlay	U models; Nonreversing; Design 3
	70519001	Overlay	U models; Reversing; Design 3
	70638802	Overlay	U models; Nonreversing; Design 5
	70638801	Overlay	U models; Reversing; Design 5

© Copyright, Alliance Laundry Systems LLC – DO NOT COPY or TRANSMIT

Electronic Display Control - Vend Models with B in the 7th Position

H and S Models

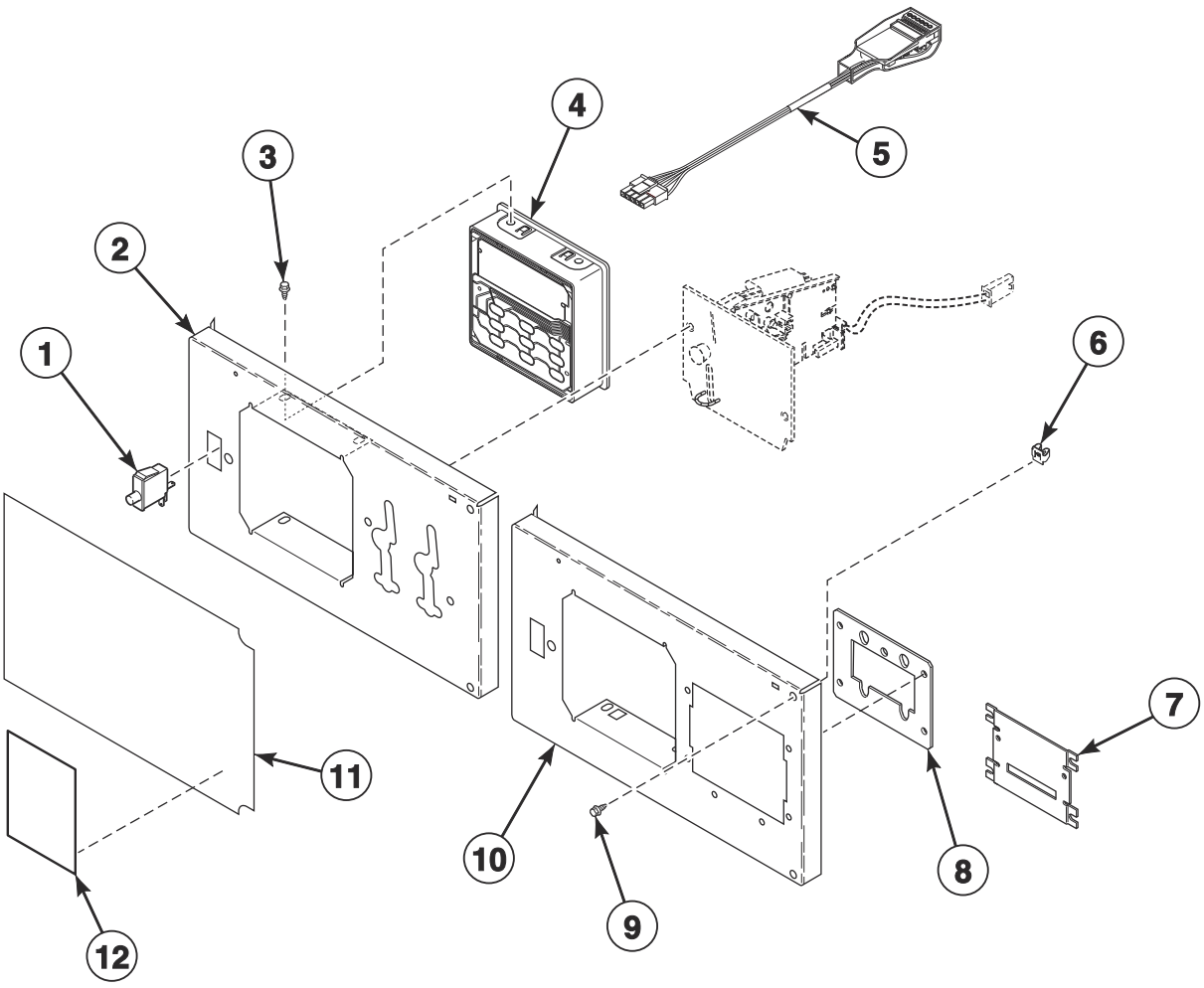

TMB3678P_70591901

© Copyright, Alliance Laundry Systems LLC – DO NOT COPY or TRANSMIT

Electronic Display Control - Vend Models with B in the 7th Position

REF	PART NO.	DESCRIPTION	COMMENTS
	44334004	Vend Activation Harness	
	44342801	Central Pay Harness	Models through November 2018
	44374701	App Pay Overlay Kit	
1	70413301	Pushbutton Switch	
2	70496601	Control Plate and Studs Assembly	Coin and central pay; Design 3 and 5 H models; Design 3 S models
3	804608	Screw	4 required
4	70478803P	Control Assembly	
5	203361P	Machine ID Control Assembly	Model or serial number is required when ordering
6	70030501	Expansion Clip	2 required
7	44089501	Slot Card Plate Assembly	Included in literature packet
8	70208801	Mounting Plate	
9	M411072	Screw	2 required
10	70497201	Control Plate Assembly	Card and card ready; Design 3 and 5 H models; Design 3 S models
11	70544701	Overlay	S models; Single drop; Design 3
	70544702	Overlay	S models; Dual drop; Design 3
	70544703	Overlay	S models; Card ready; Design 3
	70638201	Overlay	S models; Single drop; Design 5
	70638202	Overlay	S models; Dual drop; Design 5
	70638203	Overlay	S models; Card ready; Design 5
	70570301	Overlay	H models; Single drop; Design 3
	70570302	Overlay	H models; Dual drop; Design 3
	70570303	Overlay	H models; Card ready; Design 3
	70636101	Overlay	H models; Single drop; Design 5
	70636102	Overlay	H models; Dual drop; Design 5
	70636103	Overlay	H models; Card ready; Design 5
12	F8205101	Overlay	Black; Single drop; Left; Design 3
	F8696101	Overlay	Black; Single drop; Left; Design 5
	70557001	Overlay	S models; Prep for card; Design 3
	70557002	Overlay	S models; Central pay; Design 3
	F8696301	Overlay	S models; Prep for card; Design 5
	70556501	Overlay	H models; Prep for card; Design 3
	70556502	Overlay	H models; Central pay; Design 3
	70646001	Overlay	H models; Prep for card; Design 5
	70646002	Overlay	H models; Central pay; Design 5

© Copyright, Alliance Laundry Systems LLC – DO NOT COPY or TRANSMIT

Electronic Display Control - Vend Models with N or W in the 7th Position

B, H, P and S Models

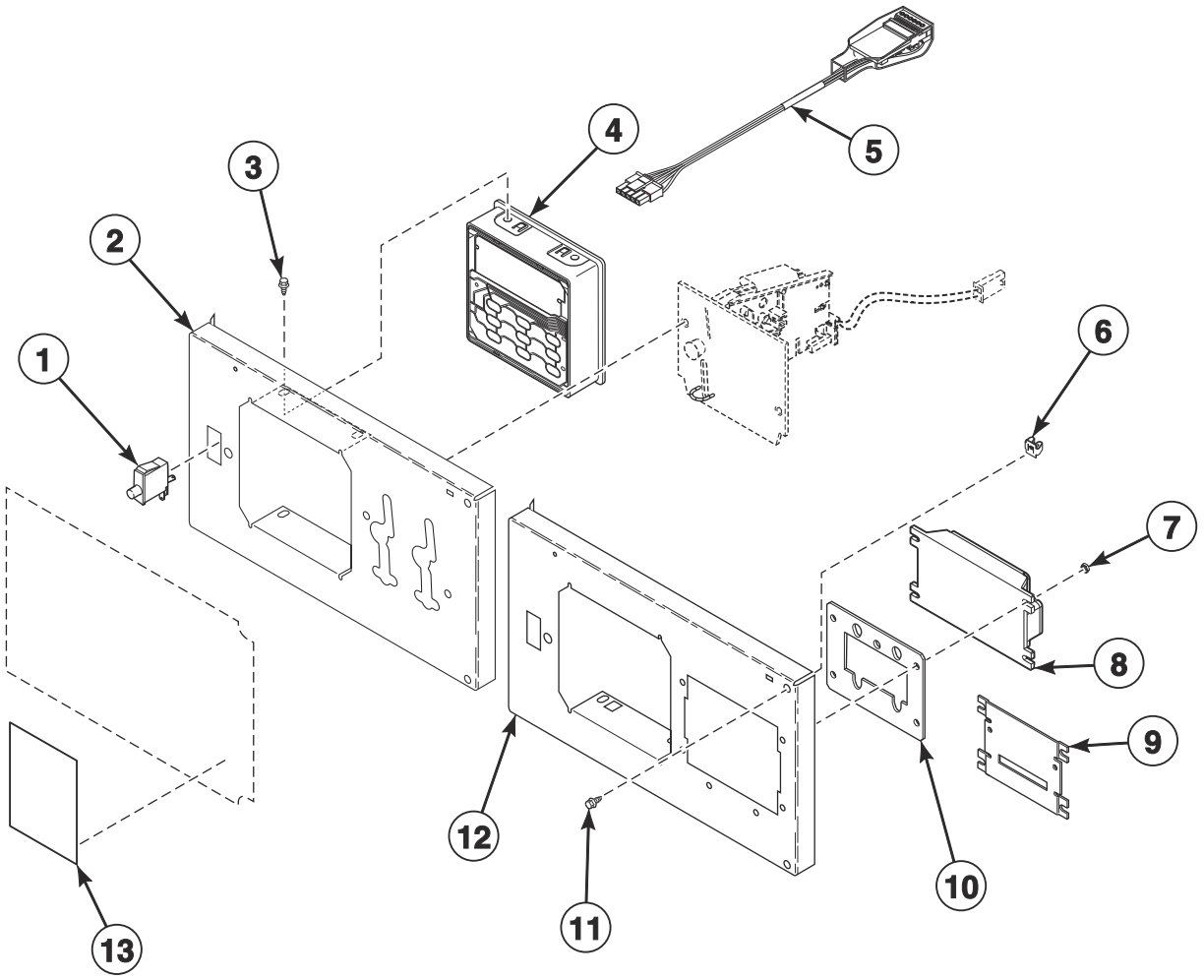

TMB3832P

© Copyright, Alliance Laundry Systems LLC – DO NOT COPY or TRANSMIT

Electronic Display Control - Vend Models with N or W in the 7th Position

REF	PART NO.	DESCRIPTION	COMMENTS
	44334004	Vend Activation Harness	
	F8719301	Fob Communication Harness	
	44374701	App Pay Overlay Kit	H and S models
1	70413301	Pushbutton Switch	
2	70496601	Control Plate and Studs Assembly	Coin and central pay; Design 3 and 5 H models; Design 3 S models; All other models
3	804608	Screw	4 required
4	70523003	Control Assembly	P models; Blue
	70478803P	Control Assembly	H and S models; Green
	70478903	Control Assembly	B models; Red
5	203361P	Machine ID Control Assembly	Model or serial number is required when ordering
6	70030501	Expansion Clip	
7	70054	Nut	
8	205135	Fob Reader Control Assembly	
9	44089501	Slot Card Plate Assembly	
10	70208801	Mounting Plate	
11	M411072	Screw	
12	70497201	Control Plate Assembly	Card, card ready and FOB; Design 3 and 5 H models; Design 3 S models; All other models
13	F8205101	Overlay	S models; Single drop; Left; Design 3
	70557001	Overlay	B models; Design 3 S models; Prep for card
	70557002	Overlay	B models; Design 3 S models; Central pay
	70295101	Overlay	S models; World drop; Design 3
	F8696101	Overlay	S models; Single drop; Left; Design 5
	F8696301	Overlay	S models; Prep for card; Design 5
	F8696201	Overlay	S models; World drop; Design 5
	70556801	Overlay	H models; World drop; Design 3
	70556501	Overlay	H models; Prep for card; Design 3
	70556502	Overlay	H models; Central pay; Design 3
	70556601	Overlay	H models; Single drop; Left; Design 3
	70556901	Overlay	H models; Citron; World drop; Design 3
	70518101	Overlay	H models; Citron; Prep for card; Design 3
	70518102	Overlay	H models; Citron; Central pay; Design 3
	70556701	Overlay	H models; Citron; Left; Design 3
	70645901	Overlay	H models; World drop; Design 5
	70646001	Overlay	H models; Prep for card; Design 5
	70646002	Overlay	H models; Central pay; Design 5
	70645601	Overlay	H models; Single drop; Left; Design 5
	70645801	Overlay	H models; Citron; World drop; Design 5
	70646101	Overlay	H models; Citron; Prep for card; Design 5
	70645701	Overlay	H models; Citron; Single drop; Left; Design 5
	70646102	Overlay	H models; Citron; Central pay; Design 5
	70556201	Overlay	P models; Single drop; Right
	70556401	Overlay	P models; Prep for card
	70556402	Overlay	P models; Central pay
	70556301	Overlay	P models; Single drop; Left
	F8733901	Overlay	S models; FOB
	F8734201	Overlay	H models; FOB
	F8736501	Overlay	H models; Citron; FOB

© Copyright, Alliance Laundry Systems LLC – DO NOT COPY or TRANSMIT

Electronic Display Control Overlays- Vend Models with N or W in the 7th Position

B, H, P and S Models

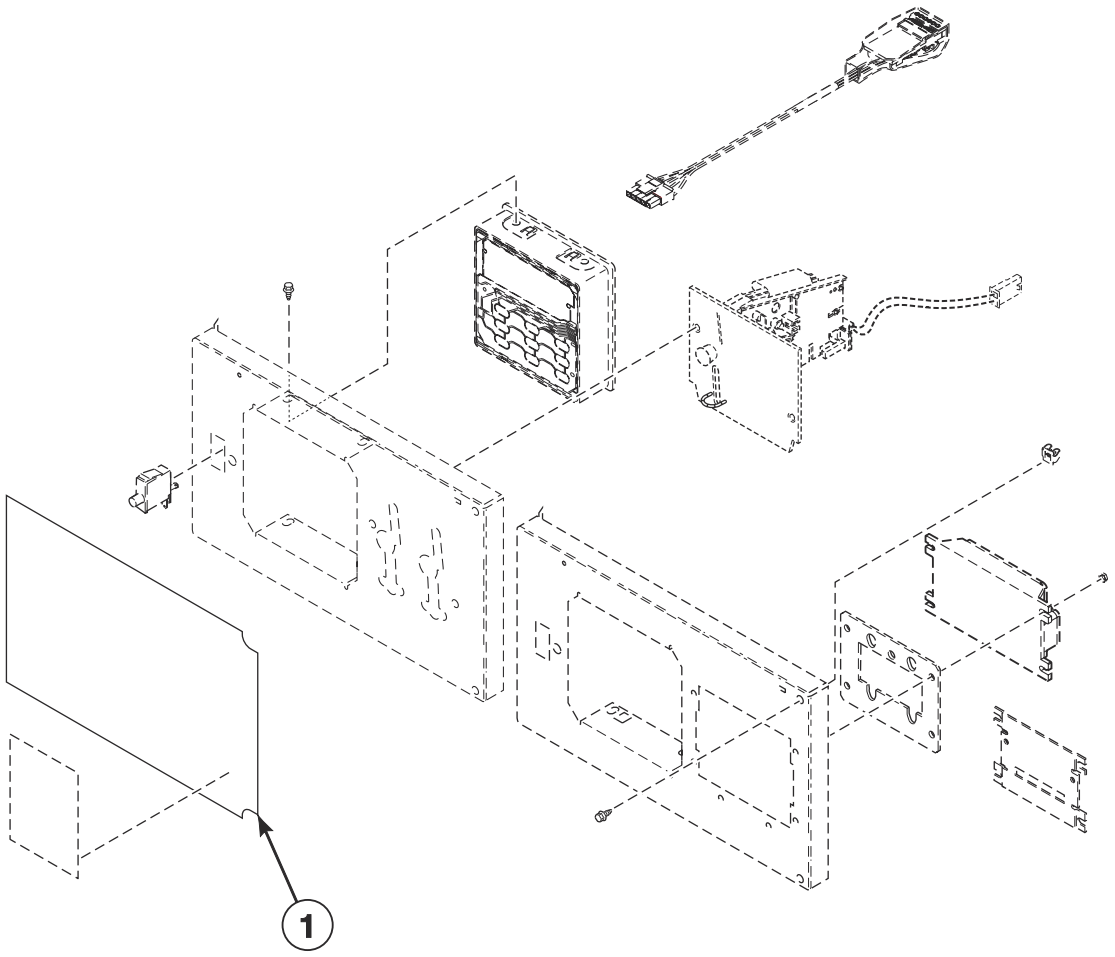

TMB3832PA

© Copyright, Alliance Laundry Systems LLC – DO NOT COPY or TRANSMIT

Electronic Display Control Overlays- Vend Models with N or W in the 7th Position

REF	PART NO.	DESCRIPTION	COMMENTS
1	70512004	Overlay	S models; Single drop; Design 3
	70512005	Overlay	S models; Dual drop; Design 3
	70512006	Overlay	S models; Card ready; Design 3
	70512007	Overlay	S models; Central pay; Design 3
	70512008	Overlay	S models; World drop; Design 3
	70637601	Overlay	S models; Single drop; Design 5
	70637602	Overlay	S models; Dual drop; Design 5
	70637603	Overlay	S models; Card ready; Design 5
	70637604	Overlay	S models; Central pay; Design 5
	70637605	Overlay	S models; World drop; Design 5
	70626301	Overlay	S models; Single drop; English/Spanish; Design 3
	70626302	Overlay	S models; Dual drop; English/Spanish; Design 3
	70626303	Overlay	S models; Card ready; English/Spanish; Design 3
	70559001	Overlay	Models SG075D and SJ075D
	70517001	Overlay	H models; Single drop; Design 3
	70517002	Overlay	H models; Dual drop; Design 3
	70517003	Overlay	H models; Card ready; Design 3
	70517004	Overlay	H models; Central pay; Design 3
	70517005	Overlay	H models; World drop; Design 3
	70636201	Overlay	H models; Single drop; Design 5
	70636202	Overlay	H models; Dual drop; Design 5
	70636203	Overlay	H models; Card ready; Design 5
	70636204	Overlay	H models; Central pay; Design 5
	70636205	Overlay	H models; World drop; Design 5
	70571001	Overlay	H models; Single drop; Cityscape
	70571002	Overlay	H models; Dual drop; Cityscape
	70571003	Overlay	H models; Card ready; Cityscape
	70518201	Overlay	H models; Single drop; Citron; Design 3
	70518202	Overlay	H models; Dual drop; Citron; Design 3
	70518203	Overlay	H models; Card ready; Citron; Design 3
	70636301	Overlay	H models; Single drop; Citron; Design 5
	70636302	Overlay	H models; Dual drop; Citron; Design 5
	70636303	Overlay	H models; Card ready; Citron; Design 5
	70571101	Overlay	B models; Single drop
	70571102	Overlay	B models; Dual drop
	70571103	Overlay	B models; Card ready
	70541201	Overlay	P models; Single drop
	70541202	Overlay	P models; Dual drop
	70541203	Overlay	P models; Card ready

© Copyright, Alliance Laundry Systems LLC – DO NOT COPY or TRANSMIT

Electronic Display Control - OPL Models with N in the 7th Position

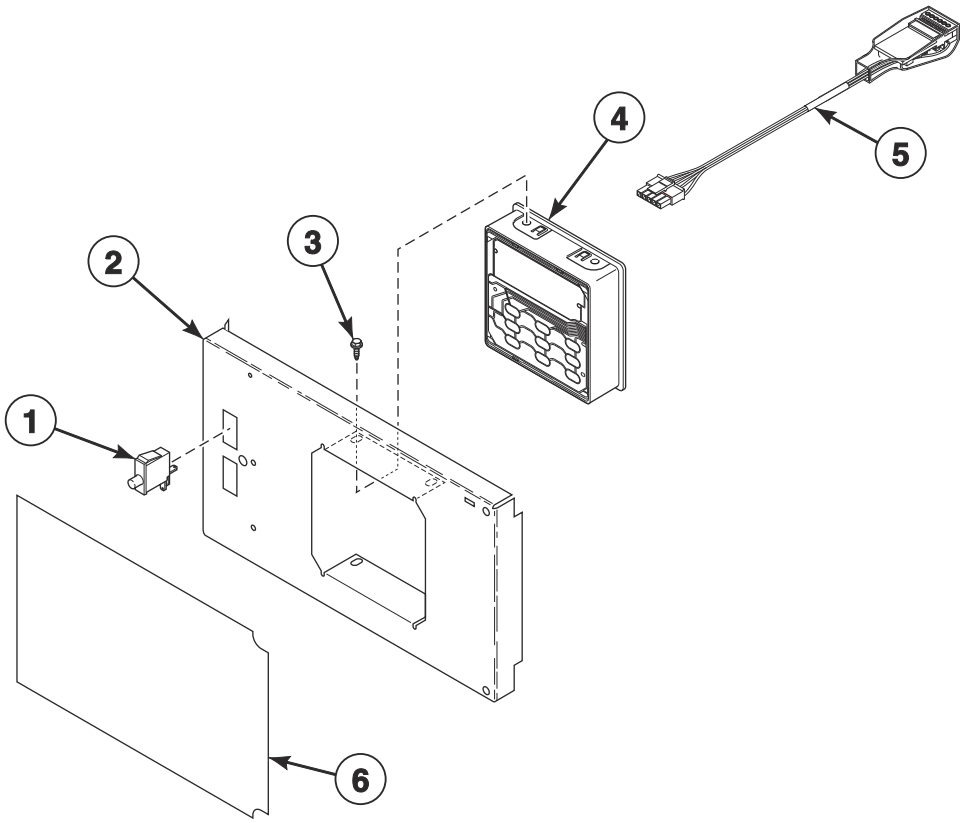

TMB3680P_70591901

© Copyright, Alliance Laundry Systems LLC – DO NOT COPY or TRANSMIT

Electronic Display Control - OPL Models with N in the 7th Position

REF	PART NO.	DESCRIPTION	COMMENTS
	44334004	Vend Activation Harness	
1	70413301	Pushbutton Switch	
2	70497101	Control Plate	Design 3 and 5 H and U models; Design 3 S models; All other models
3	804608	Screw	4 required
4	70523004P	Control Assembly	P models
	70478804	Control Assembly	H, S and U models
	70478904	Control Assembly	B models
5	203361P	Machine ID Control Assembly	Model or serial number is required when ordering
6	70570601	Overlay	S models; Reversing; Design 3
	70570602	Overlay	S models; Nonreversing; Design 3
	70638301	Overlay	S models; Reversing; Design 5
	70638302	Overlay	S models; Nonreversing; Design 5
	70571401	Overlay	U models; Reversing; Design 3
	70571402	Overlay	U models; Nonreversing; Design 3
	70638901	Overlay	U models; Reversing; Design 5
	70638902	Overlay	U models; Nonreversing; Design 5
	70570801	Overlay	H models; Reversing; Design 3
	70570802	Overlay	H models; Nonreversing; Design 3
	70636401	Overlay	H models; Reversing; Design 5
	70636402	Overlay	H models; Nonreversing; Design 5
	70548801	Overlay	B models; Reversing
	70548802	Overlay	B models; Nonreversing
	70571601	Overlay	P models; Reversing
	70571602	Overlay	P models; Nonreversing

© Copyright, Alliance Laundry Systems LLC – DO NOT COPY or TRANSMIT

3.5 Inch Graphical Control

U models with D in the 7th Position

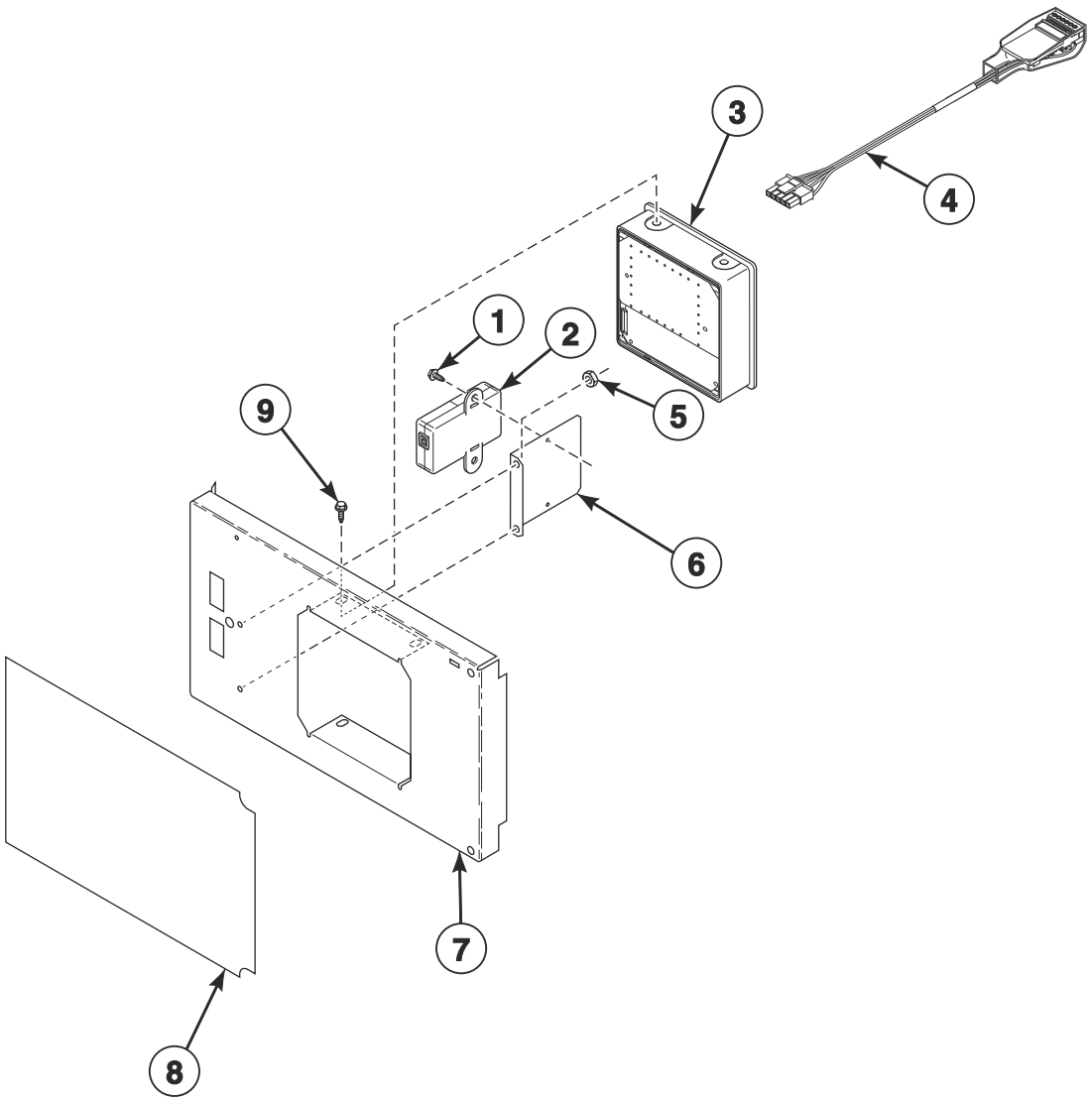

TMB3681P_70591901

© Copyright, Alliance Laundry Systems LLC – DO NOT COPY or TRANSMIT

3.5 Inch Graphical Control

REF	PART NO.	DESCRIPTION	COMMENTS
	F8617901	Harness	USB
1	33562	Screw	2 required
2	203440	USB-Serial Interface Assembly	
3	70543104	Control Assembly	
4	203361P	Machine ID Control Assembly	Model or serial number is required when ordering
5	44071201	Nut	2 required
6	70547001	USB Bracket	
7	70570201	Control Door and Studs Assembly	
8	70595401	Overlay	Design 3 models
	70639001	Overlay	Design 5 models
9	804608	Screw	4 required

© Copyright, Alliance Laundry Systems LLC – DO NOT COPY or TRANSMIT

Coin Drops

All Models Except U Models

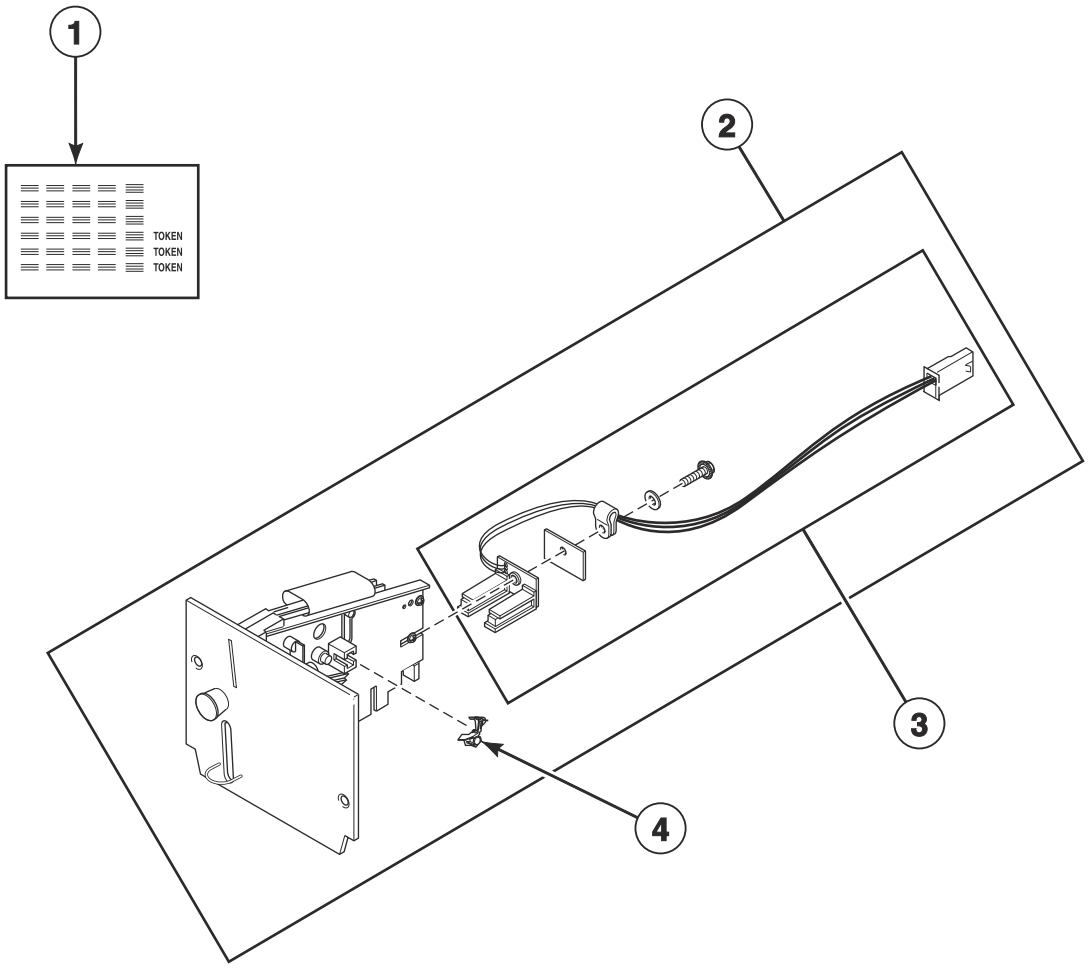

TMB3510P_70591901

© Copyright, Alliance Laundry Systems LLC – DO NOT COPY or TRANSMIT

Coin Drops

REF	PART NO.	DESCRIPTION	COMMENTS
1	38725	Coin Identification Paper	
2	70441601P	Coin Drop	Single; U.S.A.; $.25
	38475	Coin Drop Assembly	Single; Japan; 100 yen
	38464P	Coin Drop Assembly	Single; Canada; .25
	CK077	Coin Drop Kit	Single; Taiwan; 10 NT
	70506901	Coin Drop Assembly	Single; Singapore; $1.00 NEW
	70441603	Coin Drop	Dual; U.S.A.; $.25 and $1.00
	38519	Coin Drop Assembly	Dual; Japan; 100 yen and 500 yen
	70441602	Coin Drop Assembly	Dual; Canada; .25 and 1.00
	38467	Coin Drop Assembly	Dual; Australia; $0.20 and $1.00
	70447301	Coin Drop Assembly	Dual; Australia; $1.00 and $2.00
	70283102	Coin Drop Assembly	Dual; 0.20 and 0.50 Euro
	210195	Coin Drop Assembly	Dual; 0.20 and 1.00 Euro
	210196	Coin Drop Assembly	Dual; 0.50 and 1.00 Euro
	F0160737-00	Coin Meter	Dual; 0.50 and 2.00 Euro
	70281102	Coin Drop Assembly	Dual; Taiwan; 10 and 50 NT
	70482401	Coin Drop Assembly	Dual; New Zealand ; $1.00 and $2.00
	38462P	Coin Drop Assembly	Single; Token; STD 118-1
	38463	Coin Drop Assembly	Single; Token; STD 118-5
	38963P	Coin Drop	Single; Token STD 118-16
	CK097	Coin Drop Kit	Single; Jeton 08MS
	201141	Coin Drop Assembly	Single; Token; Jeton wh121
	70471601	Coin Drop Assembly	Single; Token; 7K
	70513302	Electronic Coin Drop Assembly	Euro and Great Britain coins
	70513310	Electronic Coin Drop Assembly	Japan and Thailand coins
	70513304	Electronic Coin Drop Assembly	Australia, New Zealand, Hong Kong and South Korea coins
	70513303	Electronic Coin Drop Assembly	Denmark, Norway and Euro coins
	70513306	Electronic Coin Drop Assembly	Mexico, Ecuador and U.S.A. coins
	70294107	Electronic Coin Drop Assembly	Lithuania, Latvia and Euro coins
	70513311	Electronic Coin Drop Assembly	China and Malaysia coins
	70513318	Electronic Coin Drop Assembly	South African 1, 2 and 5 rand coins
	70513309	Electronic Coin Drop Assembly	Euro coins
	70513312	Electronic Coin Drop Assembly	Russia coins
	70513313	Electronic Coin Drop Assembly	Phillipines coins
	70513314	Electronic Coin Drop Assembly	Thailand coins
	70513315	Electronic Coin Drop Assembly	Chile coins
	70513316	Electronic Coin Drop Assembly	Singapore coins
3	200674P	Opto Coupler	
4	201595P	Wire Guard	

© Copyright, Alliance Laundry Systems LLC – DO NOT COPY or TRANSMIT

Coin Drop Kits

All Models Except U Models

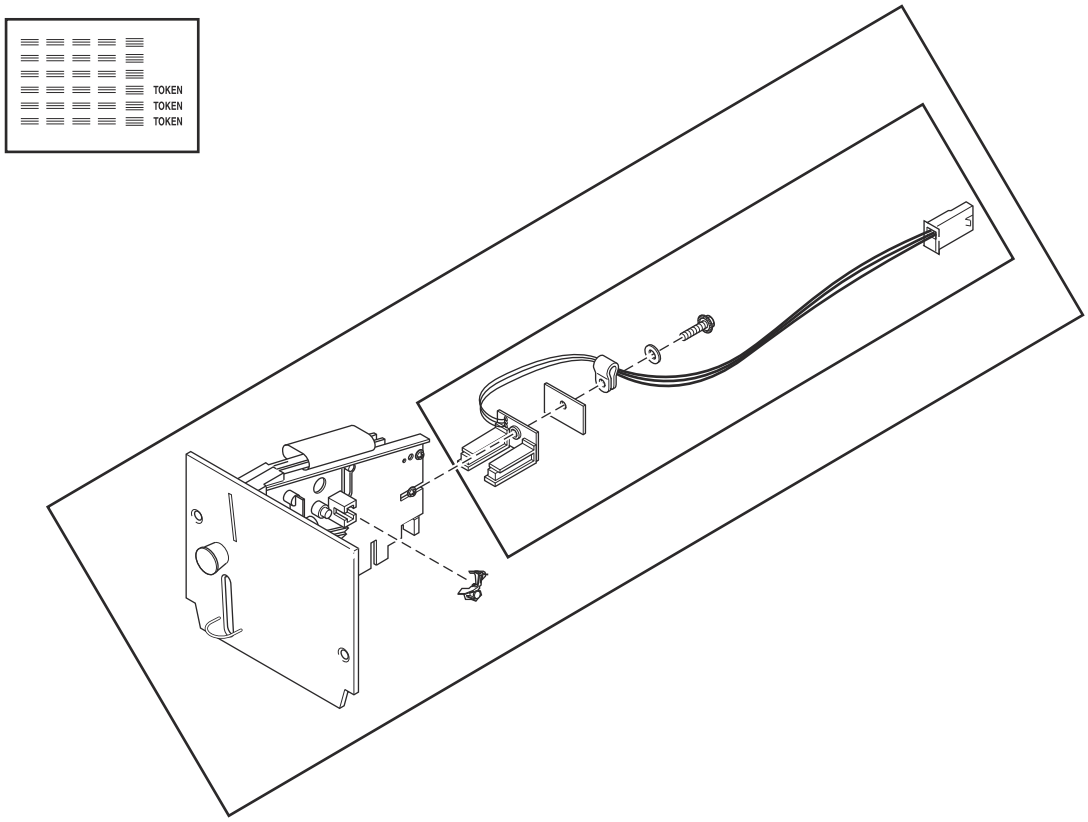

TMB3510PA_70591901

© Copyright, Alliance Laundry Systems LLC – DO NOT COPY or TRANSMIT

Coin Drop Kits

REF	PART NO.	DESCRIPTION	COMMENTS
	CK115	Electronic Coin Drop Kit	United States and Canada
	CK099	Electronic Coin Drop Kit	Australia (default), New Zealand, Hong Kong, South Korea and Malaysia
	CK100	Electronic Coin Drop Kit	United Kingdom (default) and Europe
	CK101	Electronic Coin Drop Kit	Europe (default), Denmark and Norway
	CK125	Electronic Coin Drop Kit	South Africa
	CK109	Electronic Coin Drop Kit	Euro
	CK110	Electronic Coin Drop Kit	Mexico (default), Ecuador and United States
	CK113	Electronic Coin Drop Kit	Japan and Taiwan
	CK116	Electronic Coin Drop Kit	Malaysia (default) and China
	CK117	Electronic Coin Drop Kit	Russia
	CK118	Electronic Coin Drop Kit	Philippine
	CK119	Electronic Coin Drop Kit	Thailand
	CK120	Electronic Coin Drop Kit	Chile
	CK121	Electronic Coin Drop Kit	Singapore
	CK122	Coin Drop Kit	New Zealand; 1.00 and 2.00

© Copyright, Alliance Laundry Systems LLC – DO NOT COPY or TRANSMIT

Network Board, Central Pay and Card Reader Components

Central Pay Starting December 2018

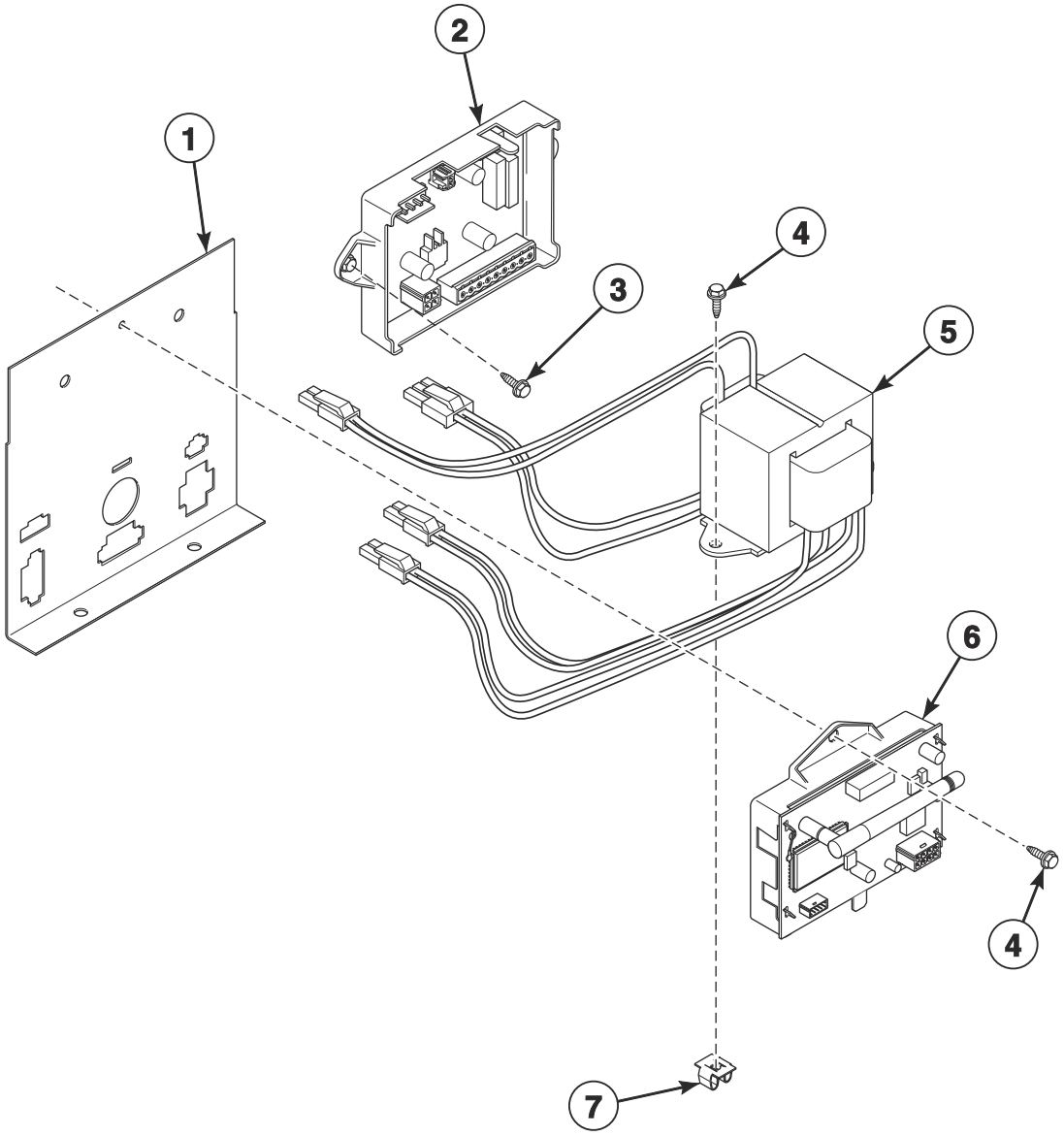

TMB3689P_70591901

© Copyright, Alliance Laundry Systems LLC – DO NOT COPY or TRANSMIT

Network Board, Central Pay and Card Reader Components

REF	PART NO.	DESCRIPTION	COMMENTS
	70596301	Wireless Network Kit	H and U models through 1/31/19; S models through 5/12/19
	70609701	Wireless Network Kit	H models starting 2/1/19; S models starting 5/13/19
	F8536002	Wireless Network Board Harness	H and U models through 1/31/19; S models through 5/12/19
	F8613201	FCC-IC Label	HT and U models through 1/31/19; ST models through 5/12/19
	F8674006	Wireless Network Harness	H models starting 2/1/19; S models starting 5/13/19
	204692	Wireless Control Label	H models starting 2/1/19; S models starting 5/13/19
	NK320	Ethernet Gateway Kit	S models through 5/12/19
	NK330	USB Gateway Kit	S models through 5/12/19
	203346	USB IR Interface Kit	
	70666806	Fob Reader Kit	
	44355602	Central Pay Harness	Routes from central pay board to contol tray
	44272301	Transformer Harness	100-120 Volt; Routes from transformer to I/O Control Assembly; Card and central pay
	44272302	Transformer Harness	200-480 Volt; Routes from transformer to I/O Control Assembly; Card and central pay
	44355604	Central Pay Board Harness	Routes from central pay board to transformer
	44355605	Central Pay Harness	Routes from central pay board to front end control
1	70307007	Harness Mounting Plate	
2	44359001	Central Pay Kit	100-120 Volt
	44359003	Central Pay Kit	200-480 Volt
3	51780	Screw	2 required
4	F8206901	Screw	
5	202757	Transformer	100-120 Volt; Card and central pay
	202758	Transformer	200-480 Volt; Card and central pay
6	203532	Wireless Network Control Assembly	H and U models through 1/31/19; S models through 5/12/19
	807211	Wireless Network Control Assembly	H models starting 2/1/19; S models starting 5/13/19
7	70030501	Expansion Clip	2 required

© Copyright, Alliance Laundry Systems LLC – DO NOT COPY or TRANSMIT

Emergency Stop Button - OPL Models

A, H, J, K, R and U in the 2nd Position
G and T in the 2nd Position Through 12/31/18

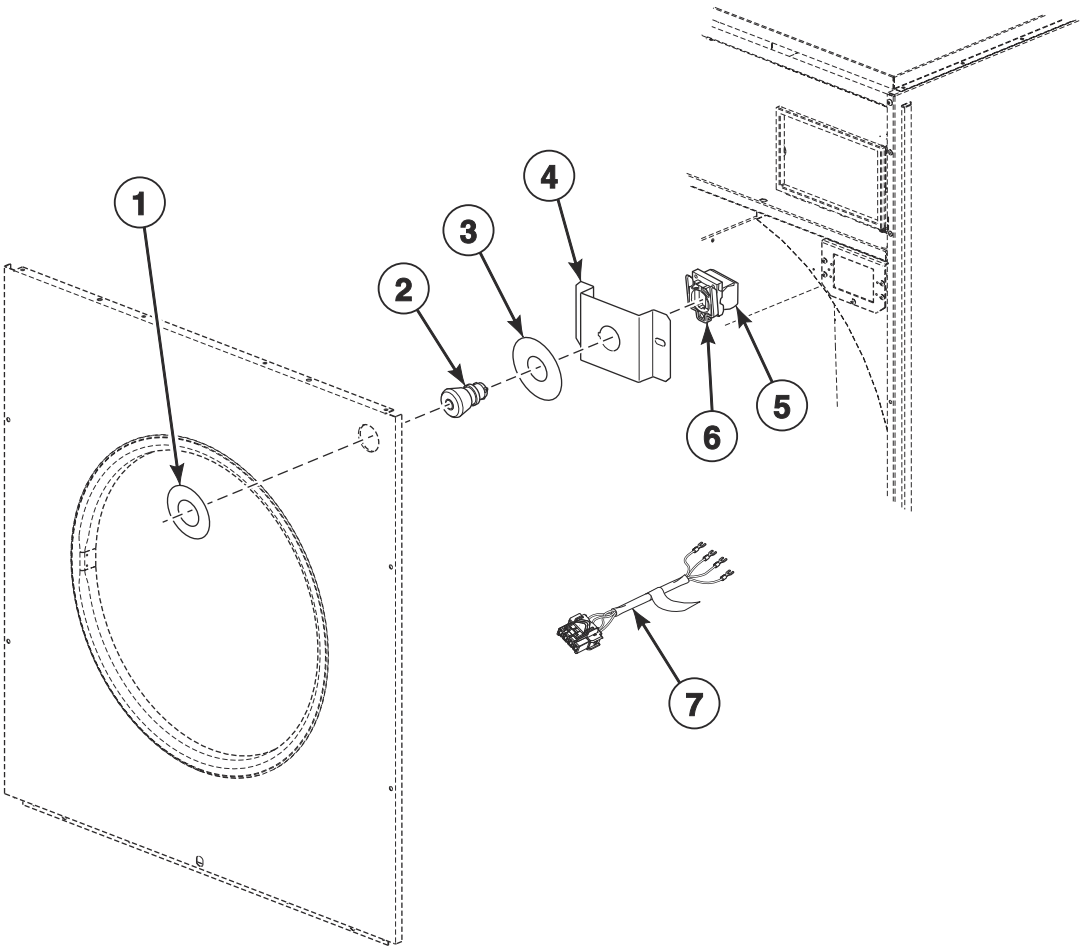

TMB3513P_70591901

© Copyright, Alliance Laundry Systems LLC – DO NOT COPY or TRANSMIT

Emergency Stop Button - OPL Models

REF	PART NO.	DESCRIPTION	COMMENTS
	70580301	Emergency Stop Button Kit	Includes items 2-4
	F8519403	Emergency Stop Bypass Harness	Coin, card and central pay
	44272106	Emergency Stop Interconnect Harness	
1	44012903	Emergency Stop Label	
2	F200233500	Emergency Stop Pushbutton	
3	44012901	Emergency Stop Label	
4	70550401	Emergency Stop Mounting Bracket	
5	F8069501	Contact Switch	2 required
6	F8538101	Contact Base	
7	44272401	Emergency Stop Harness	

© Copyright, Alliance Laundry Systems LLC – DO NOT COPY or TRANSMIT

Cabinet Front Components

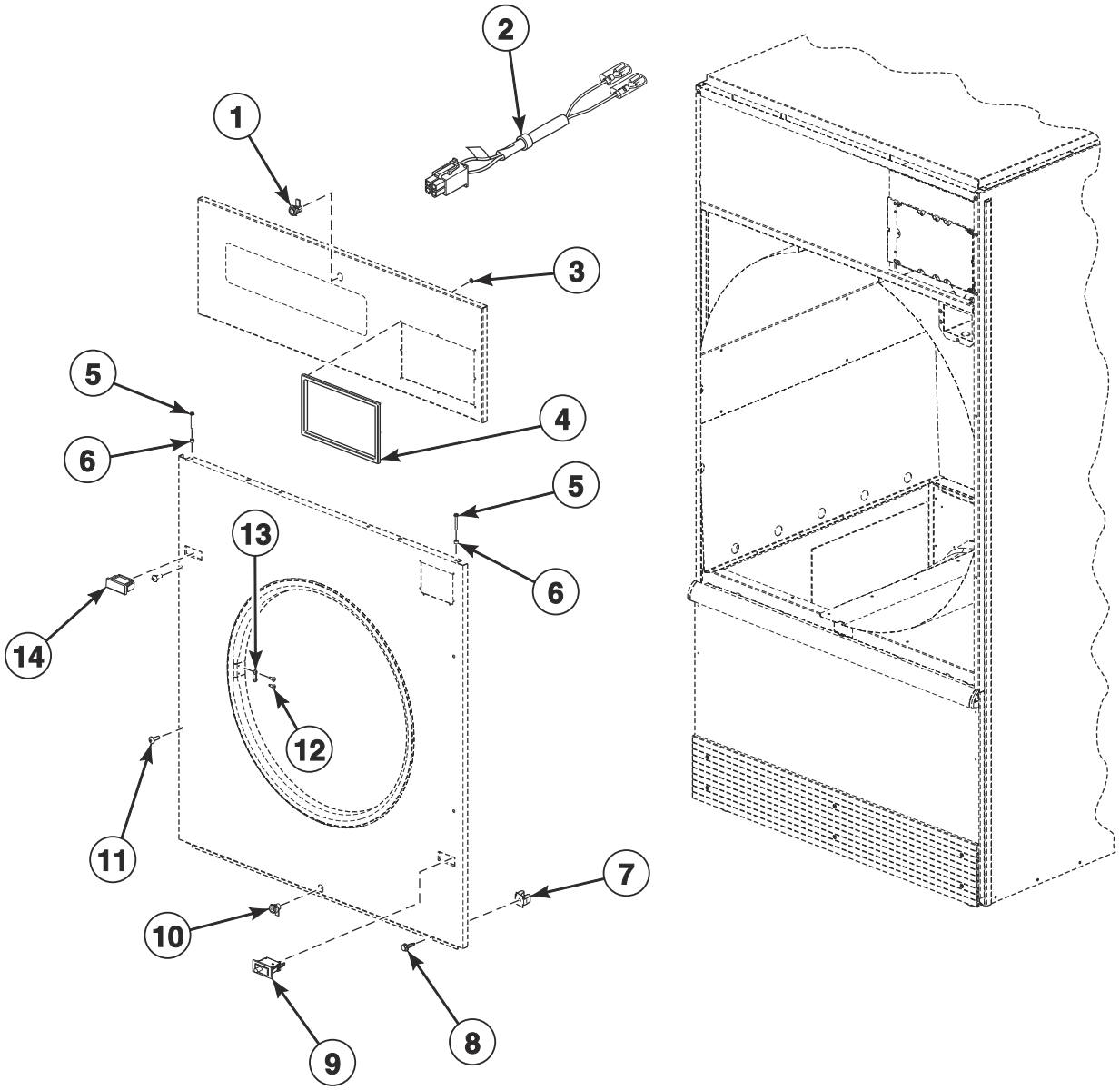

TMB3538P_70591901

© Copyright, Alliance Laundry Systems LLC – DO NOT COPY or TRANSMIT

Cabinet Front Components

REF	PART NO.	DESCRIPTION	COMMENTS
	M4379P4	Tumbler Dolly Kit	
	44335202	Door Switch Harness	
	44334103	Bypass Harness	Card and central pay
	70482901	Door Catch Kit	
1	70733701	Lock, Key and Nut Kit	RL001 key code; Black; Control panel; Optional if same key is to be used for control lock
	70155601	Key	RL001
	44089304	Panel Lock	RL001; Chrome
2	44334101	Coin Vault Switch Harness	
3	M400977	Nut	8 required per control trim
4	70529401	Control Trim	H models
	44016401	Control Trim	P models; Design 3 S models; Black
5	70275801	Screw	4 required
6	56079	Panel Locator	2 required
7	70030501	Expansion Clip	
8	M411072	Screw	4 required; Front panel; Bottom
9	70413301	Pushbutton Switch	Door switch
10	70733701	Lock, Key and Nut Kit	RL001 key code; Black; Lint panel; Optional if same key is to be used for control lock
	70155601	Key	RL001
	70722301	Lock, Key and Nut Kit	RL002 key code; Lint panel; Standard coin and card models
	70155602	Key	RL002
	44089305	Panel Lock	RL002; Chrome
11	70033502	Screw	2 required for stainless steel panels in addition to 2 of 70182601 Screw
	70182601	Screw	2 required for stainless steel panels in addition to 2 of 70033502 Screw; 4 required for painted panels
12	M400003	Pop Rivet	2 per door latch
13	M401223	Door Latch	2 required
14	44057801W	Switch Hole Plug	White; Design 3 models
	44057801Q	Switch Hole Plug	Bisque; Design 3 models
	44057801B	Switch Hole Plug	Black; For stainless steel; Design 3 models
	44057801LG	Switch Hole Plug	Light gray; Design 3 models

© Copyright, Alliance Laundry Systems LLC – DO NOT COPY or TRANSMIT

Cabinet Panels and Nameplates

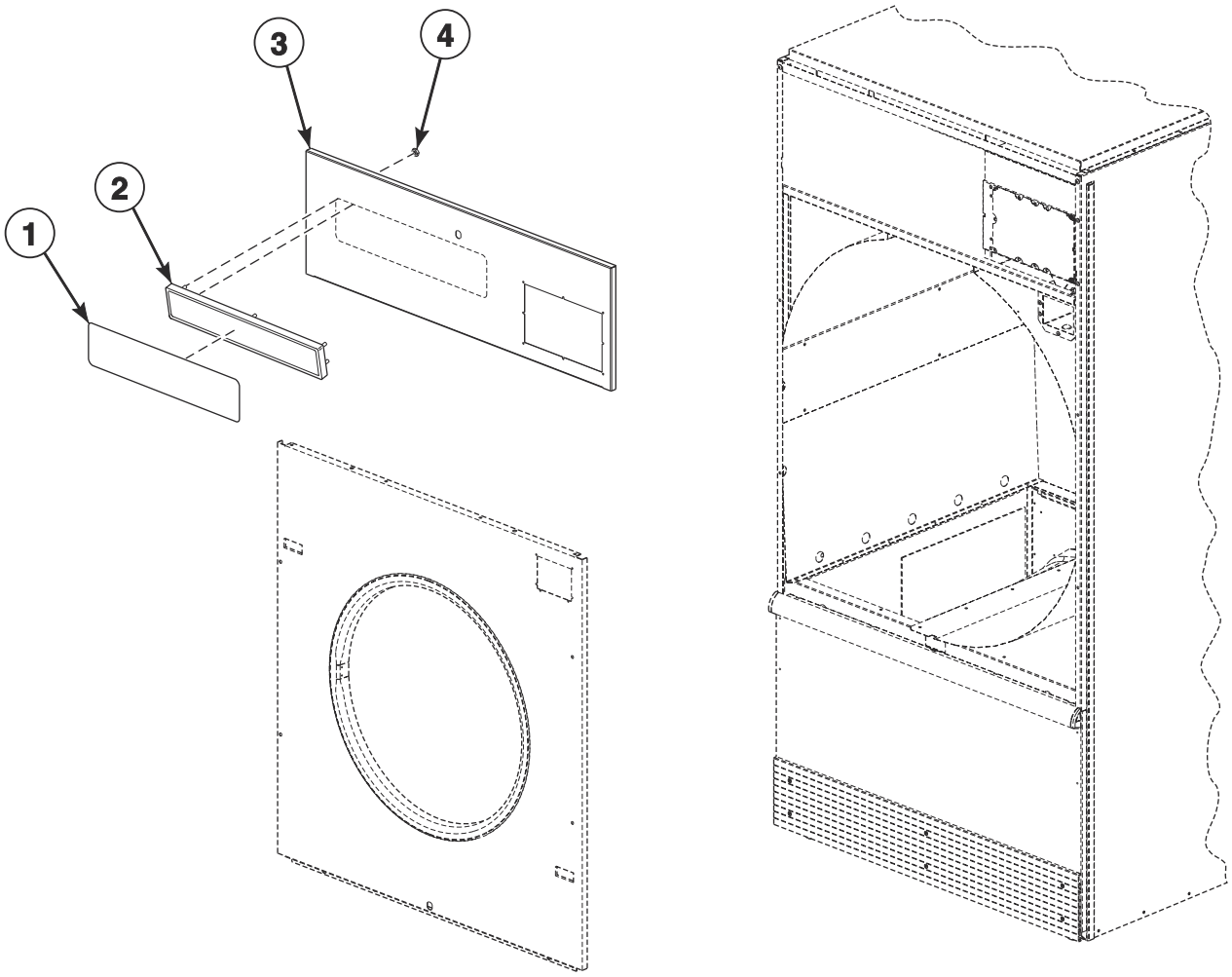

TMB3539P_70591901

© Copyright, Alliance Laundry Systems LLC – DO NOT COPY or TRANSMIT

Cabinet Panels and Nameplates

REF	PART NO.	DESCRIPTION	COMMENTS
	44150105	Insulation	Use behind item 3
1	44010601	Nameplate	S models; Design 3
	F8688901	Nameplate	S models; Design 5
	F8688001	Nameplate	H models; Design 5
	F8443106	Nameplate	U models
	70541801	Nameplate	B models
	567887	Nameplate	P models
2	70117401	Nameplate Bezel	S models; Design 3
3	44040008B	Control Panel	B models
	44040005*	Control Panel	U models; Only white available for Design 5
	44040013	Control Panel	Design 5 U models; Stainless steel
	44000122*	Control Panel	H and S models; P models with white front panel; Only white available for Design 5
	44000125	Control Panel	H models; P models with white front panel; Design 3 S models; Stainless steel
	44040015LG	Control Panel	U models; Light gray
	44040014	Control Panel	U models; Stainless steel; Design 3
	44040011*	Control Panel	U models
	44000130DG	Control Panel	P models; Dark gray
4	M400977	Nut	S models; 6 required; Design 3

*** Add Letter To Designate Color. Q - Bisque W - White**

© Copyright, Alliance Laundry Systems LLC – DO NOT COPY or TRANSMIT

Cabinet Panels and Nameplates - Design 5 S Models

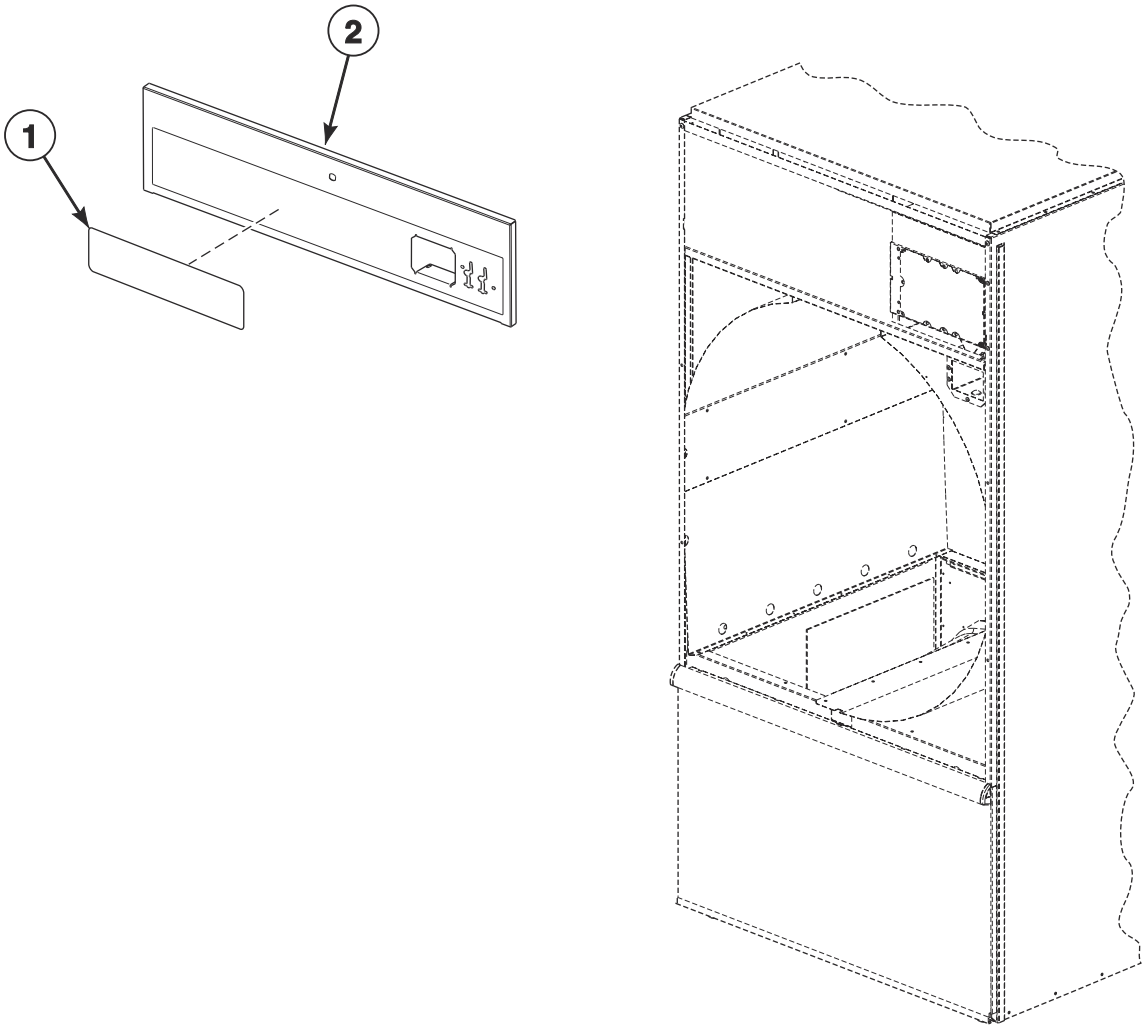

TMB3814P_70591901

© Copyright, Alliance Laundry Systems LLC – DO NOT COPY or TRANSMIT

Cabinet Panels and Nameplates - Design 5 S Models

REF	PART NO.	DESCRIPTION	COMMENTS
	F8521303	Lanyard Cable	
1	F8688901	Nameplate	
2	44368001	Control Panel	Stainless steel; Coin
	44368002	Control Panel	Stainless steel; Card
	44367103	Control Panel	Stainless steel; OPL
	44368003W	Control Panel	Coin
	44368004W	Control Panel	Card
	44367106W	Control Panel	OPL

© Copyright, Alliance Laundry Systems LLC – DO NOT COPY or TRANSMIT

Front Panel Assemblies - Design 3 Models

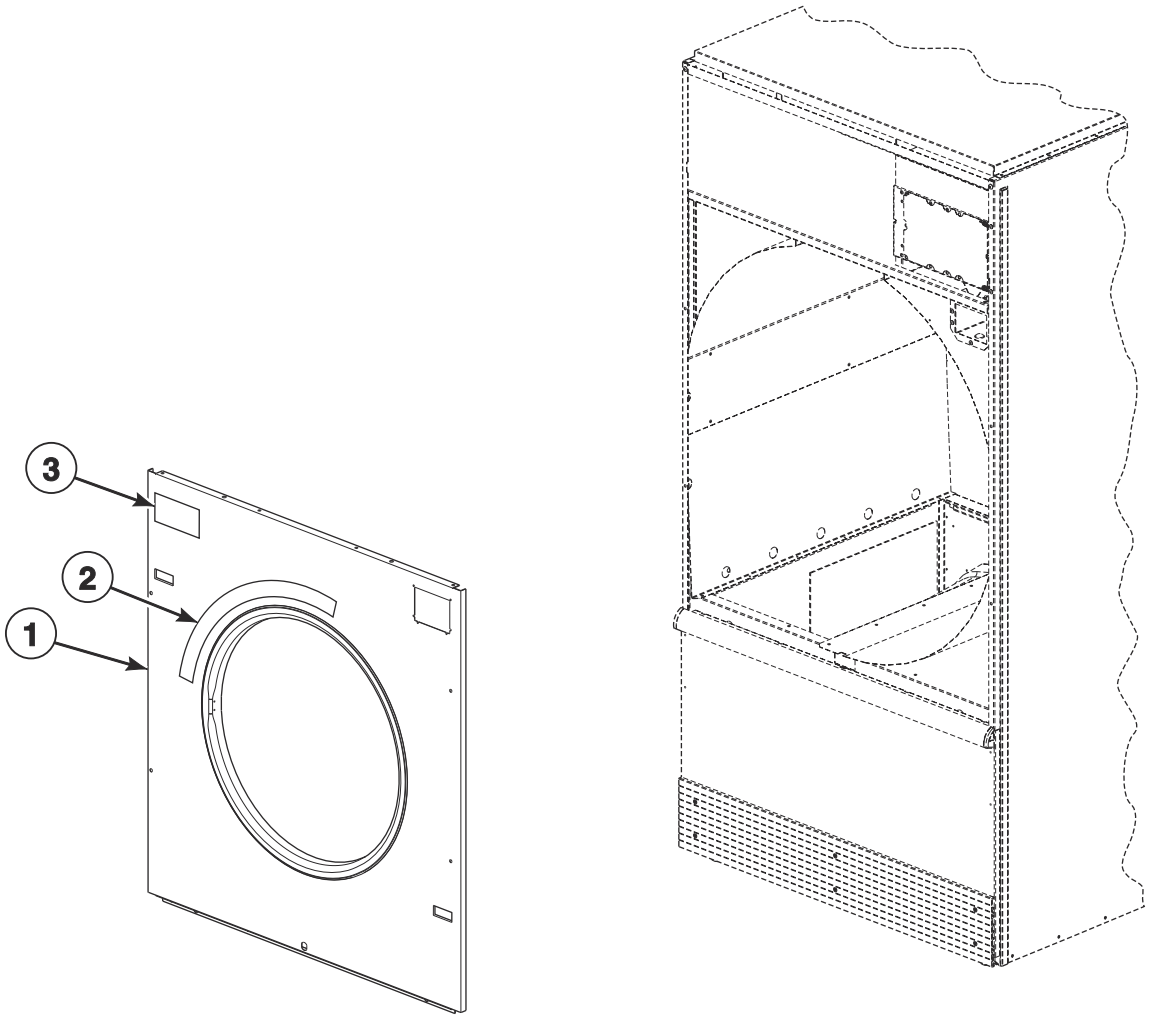

TMB3608P_70591901

© Copyright, Alliance Laundry Systems LLC – DO NOT COPY or TRANSMIT

Front Panel Assemblies - Design 3 Models

REF	PART NO.	DESCRIPTION	COMMENTS
1	44052525*	Front Panel	All models except U models; Coin
	44052527	Front Panel	All models except U models; Coin; Stainless steel
	44052526DG	Front Panel	P models; Coin; Dark gray
	44052520W	Front Panel	All models except U models; Card and central pay
	44052522	Front Panel	All models except U models; Card and central pay; Stainless steel
	44052520DG	Front Panel	P models; Card; Dark gray
	44052530W	Front Panel	OPL; With e-stop
	44052529	Front Panel	OPL; Stainless steel; With e-stop
	44052530LG	Front Panel	U models; OPL; Light gray; With e-stop
	44052530DG	Front Panel	P models; OPL; Dark gray; With e-stop
	44077905WP	Front Panel Assembly	OPL; Without e-stop
	44077919	Front Panel Assembly	OPL; Stainless steel; Without e-stop
	44052517LG	Front Panel	U models; OPL; Light gray; Without e-stop
	44052517DG	Front Panel	P models; OPL; Dark gray; Withou e-stop
2	70534401	Warning Label	English
	70534402	Warning Label	French
	70534405	Warning Label	Colombian Spanish
	70534400	Label Kit	Warning; IEC models
3	44190901	Label	P models; Safe Tech
	70537001	Label	B, H, S and U models; C.A.R.E.

*** Add Letter To Designate Color. Q - Bisque W - White**

© Copyright, Alliance Laundry Systems LLC – DO NOT COPY or TRANSMIT

Front Panel Assemblies - Design 5 Models

H, S and U Models

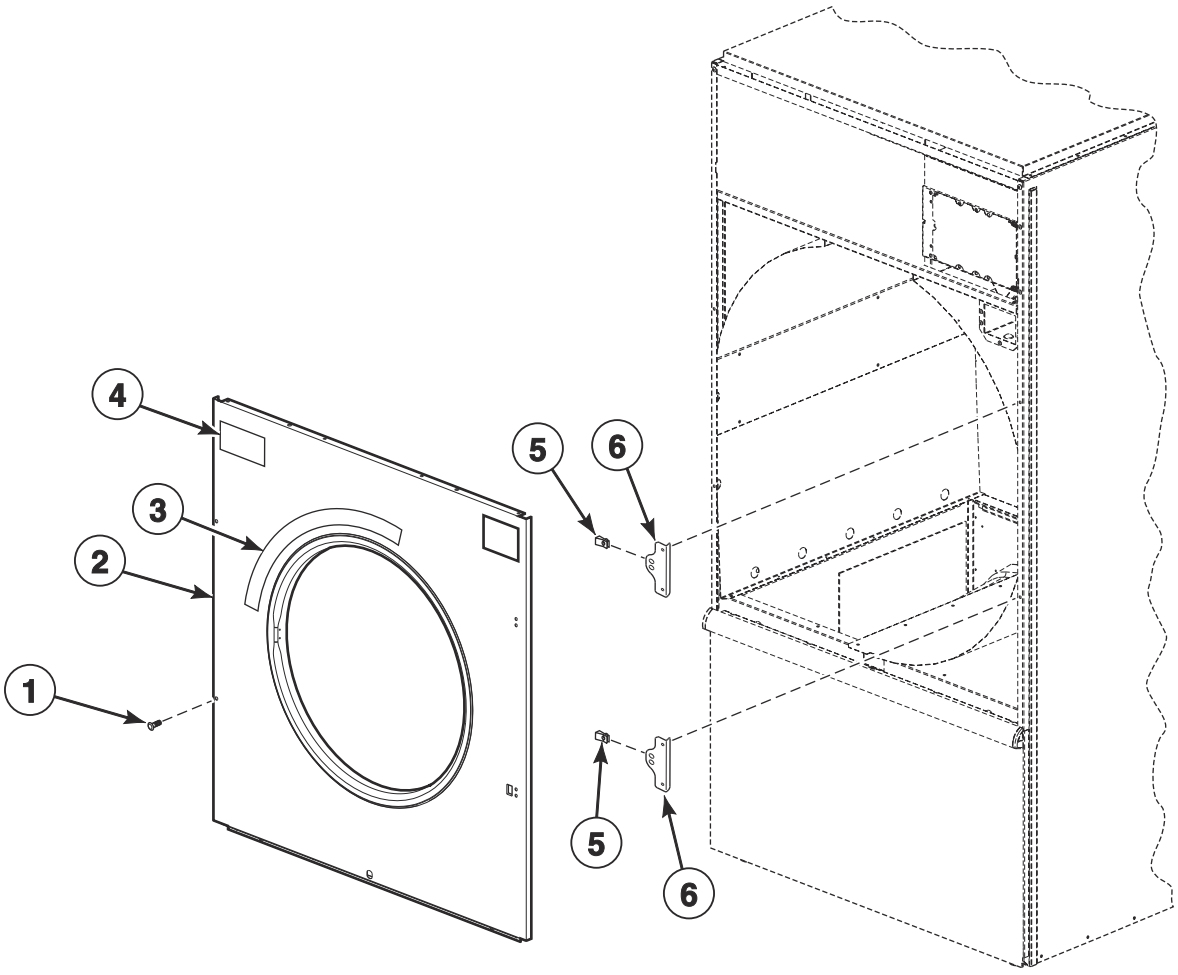

TMB3815P_70591901

© Copyright, Alliance Laundry Systems LLC – DO NOT COPY or TRANSMIT

Front Panel Assemblies - Design 5 Models

REF	PART NO.	DESCRIPTION	COMMENTS
	70058501	Pop Rivet	Use to attach item 6
1	70182601	Screw	
2	44367403	Front Panel	Stainless steel; Coin
	44367406	Front Panel	Stainless steel; Card and central pay
	44367409	Front Panel	Stainless steel; OPL
	44367408LG	Front Panel	U models; Light gray; OPL
	44367401W	Front Panel	Coin
	44367405W	Front Panel	Card and central pay
	44367407W	Front Panel	OPL
3	70534401	Warning Label	English
	70534402	Warning Label	French
	70534405	Warning Label	Colombian Spanish
4	70537001	Label	C.A.R.E.
5	70030401	Nut	
6	70634301	Lug Mount Bracket	

© Copyright, Alliance Laundry Systems LLC – DO NOT COPY or TRANSMIT

Lower Cabinet Front Components

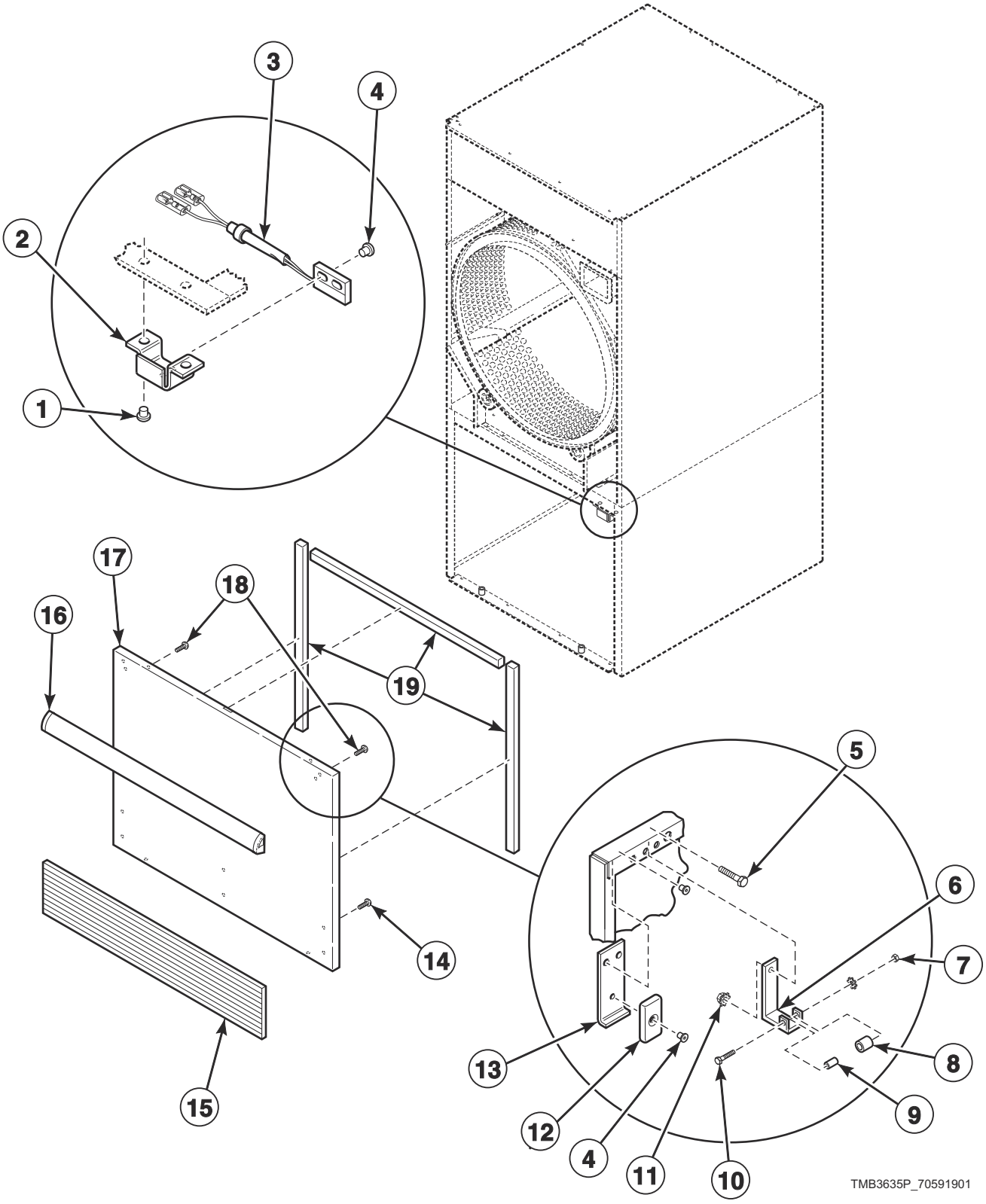

© Copyright, Alliance Laundry Systems LLC – DO NOT COPY or TRANSMIT

Lower Cabinet Front Components

REF	PART NO.	DESCRIPTION	COMMENTS
	70404001	Roller Bracket Assembly	Includes items 6-10
1	70058501	Pop Rivet	
2	44296101	Switch Bracket	
3	F8066804	Reed Switch Assembly	
4	70743501	Rivet	
5	70132301	Screw	Attaching roller catch
6	70030301	Roller Catch Arm	
7	23951	Nut	
8	70297601	Roller Catch Wheel	
9	70030201	Roller Catch Spacer	
10	70072801	Screw	
11	51236	Nut	Attaching roller catch
12	70343101	Magnet	
13	44290501	Magnet Bracket	
14	70126301	Pop Rivet	For attaching kickplate; Black; 6 required
	70126401	Pop Rivet	For attaching kickplate; Gray; 6 required
15	70117619	Kickplate	H and U models; Gray; Design 3
	70117607	Kickplate	All models except H models; Black; Design 3
16	70154405P	Handle and Caps Assembly	B, S and U models; P models with white and stainless steel front panel; Black; Includes endcaps
	70407210	Handle Bumper	P models
	70154415	Handle and Caps Assembly	H and U models; Gray; Includes endcaps
17	44293603W	Lint Panel	Design 3 Models
	44293604DG	Lint Panel	P models; Dark gray; No kickplate
	44293603LG	Lint Panel	Design 3 U models; Light gray
	44293602	Lint Panel	B, H, S and U models; Design 3; Stainless steel
	44293605	Lint Panel	P models; Design 5 H, S and U models; Stainless steel; No kickplate
	44293604LG	Lint Panel	Design 5 U models; Light gray; No kickplate
	44293604W	Lint Panel	Design 5 H, S and U models; No kickplate
18	430757	Screw	
19	70289101P	Gasket	Sold per foot

*** Add Letter To Designate Color. Q - Bisque W - White**

© Copyright, Alliance Laundry Systems LLC – DO NOT COPY or TRANSMIT

Lint Panel Components

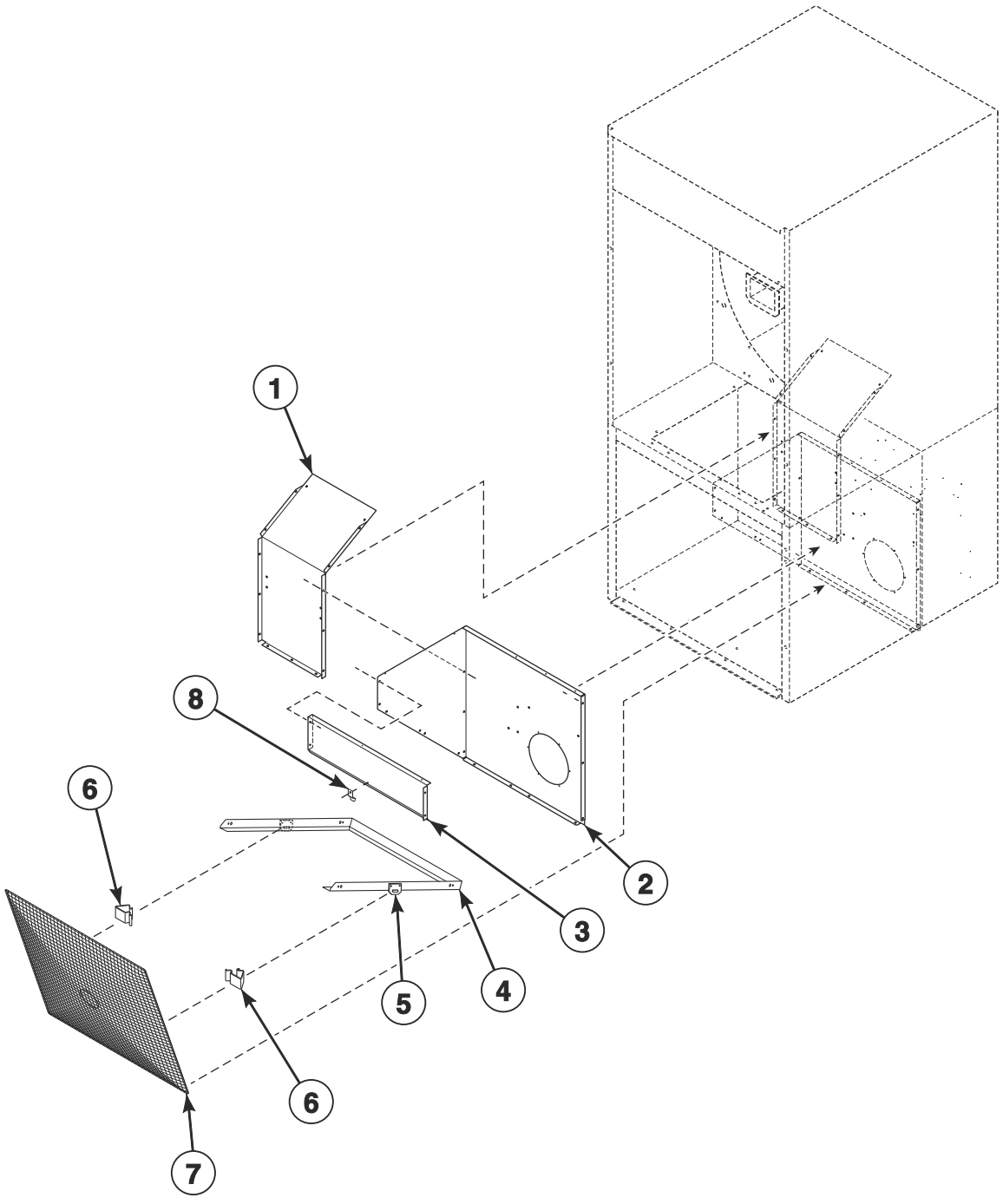

TMB3637P_70591901

© Copyright, Alliance Laundry Systems LLC – DO NOT COPY or TRANSMIT

Lint Panel Components

REF	PART NO.	DESCRIPTION	COMMENTS
1	44298101	Lint Panel	F75 models; Left
	44298102	Lint Panel	All other models; Left
2	44298201	Lint Panel	F75 models; Right
	44300901	Lint Panel	All other models; Right
3	44298901	Lint Screen Top Rail	
4	44325301	Lint Bracket	
5	44140202	Lint Clip Bracket	2 required
6	35865	Hold-Down Clip	2 required
7	44063601	Lint Screen	
8	H96418413	Lint Screen Clip	

© Copyright, Alliance Laundry Systems LLC – DO NOT COPY or TRANSMIT

Cabinet Components

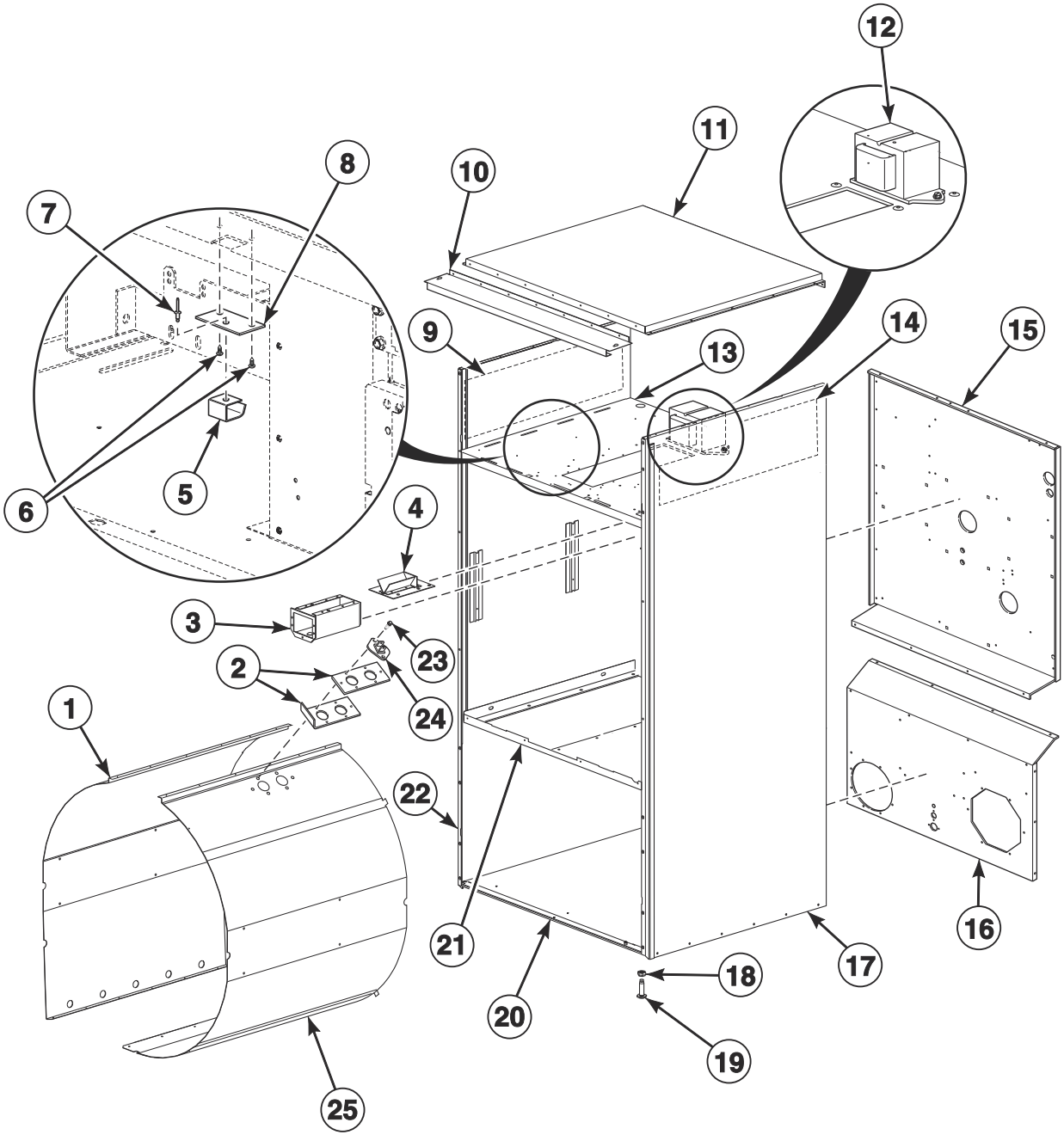

TMB3638P_70591901

© Copyright, Alliance Laundry Systems LLC – DO NOT COPY or TRANSMIT

Cabinet Components

REF	PART NO.	DESCRIPTION	COMMENTS
	298P4P	Spray Paint	White
	122P4P	Porcelain Touch-Up Paint	White
	370P4P	Porcelain Touch-Up Paint	Bisque
	70058501	Pop Rivet	Use with items 17 and 22
	430497	Screw	Use with items 17 and 22
	44334103	Bypass Harness	Coin vault switch
	44334101	Coin Vault Switch Harness	
	44272301	Transformer Harness	120 Volt; Use with item 12
	44272302	Transformer Harness	240 Volt; Use with item 12
1	44299001P	Baffle	Left
2	44068101	Thermistor Plate	
	44068102	Thermistor Plate	Use as a shim
3	70529501	Coin Vault Assembly	
	70529502	Coin Vault and Emergency Stop Mount Assembly	Models with emergency stop
	F160673P	Coin Box	Optional equipment; Includes lock and key
4	70296401	Coin Chute Assembly	Wide
5	431318	Control Door Latch	
6	431287	Screw	
7	M400003	Pop Rivet	
8	44003201	Latch Mounting Bracket	
9	44150102	Insulation	
10	44368201	Top Panel Bracket	Gas and electric models
11	44129301P	Top Cover Pan	Gas and electric models
	44139301	Top Cover	Steam models
12	202757	Transformer	100-120 Volt; Card reader models
	202758	Transformer	All other voltages; Card reader models
13	44300101	Top Pan	
14	44150105	Insulation	
15	44297001	Upper Rear Panel	
16	44297101	Lower Rear Panel	F75 models
	44300001	Lower Rear Panel	All other models
17	44299501DG	Side Panel	P models; Right; Dark gray
	44299501*P	Side Panel	All models except P models; Design 3; Right
	44367802LG	Side Panel	Design 3 U models; Right; Light gray
	44367801LG	Side Panel	Design 5 U models; Right; Light gray
	44367801W	Side Panel	Design 5 H, S and U models; Right
18	21899	Nut	Right
19	70247701	Screw	Leveling leg
20	44298701	Bottom Pan	
21	44298601	Center Pan	
22	44367702DG	Side Panel	P models; Left; Dark gray
	44299401*	Side Panel	All models except P models; Design 3; Left
	44367702LG	Side Panel	Design 3 U models; Left; Light gray
	44367701LG	Side Panel	Design 5 U models; Left; Light gray
	44367702W	Side Panel	Design 5 H, S and U models; Left
23	51780	Screw	
24	44064701	Thermistor	
25	44299802P	Baffle	Right
	44299801	Baffle	Right with fire suppression system

*** Add Letter To Designate Color. Q - Bisque W - White**

© Copyright, Alliance Laundry Systems LLC – DO NOT COPY or TRANSMIT

Rear Panel and Belt Guard Components

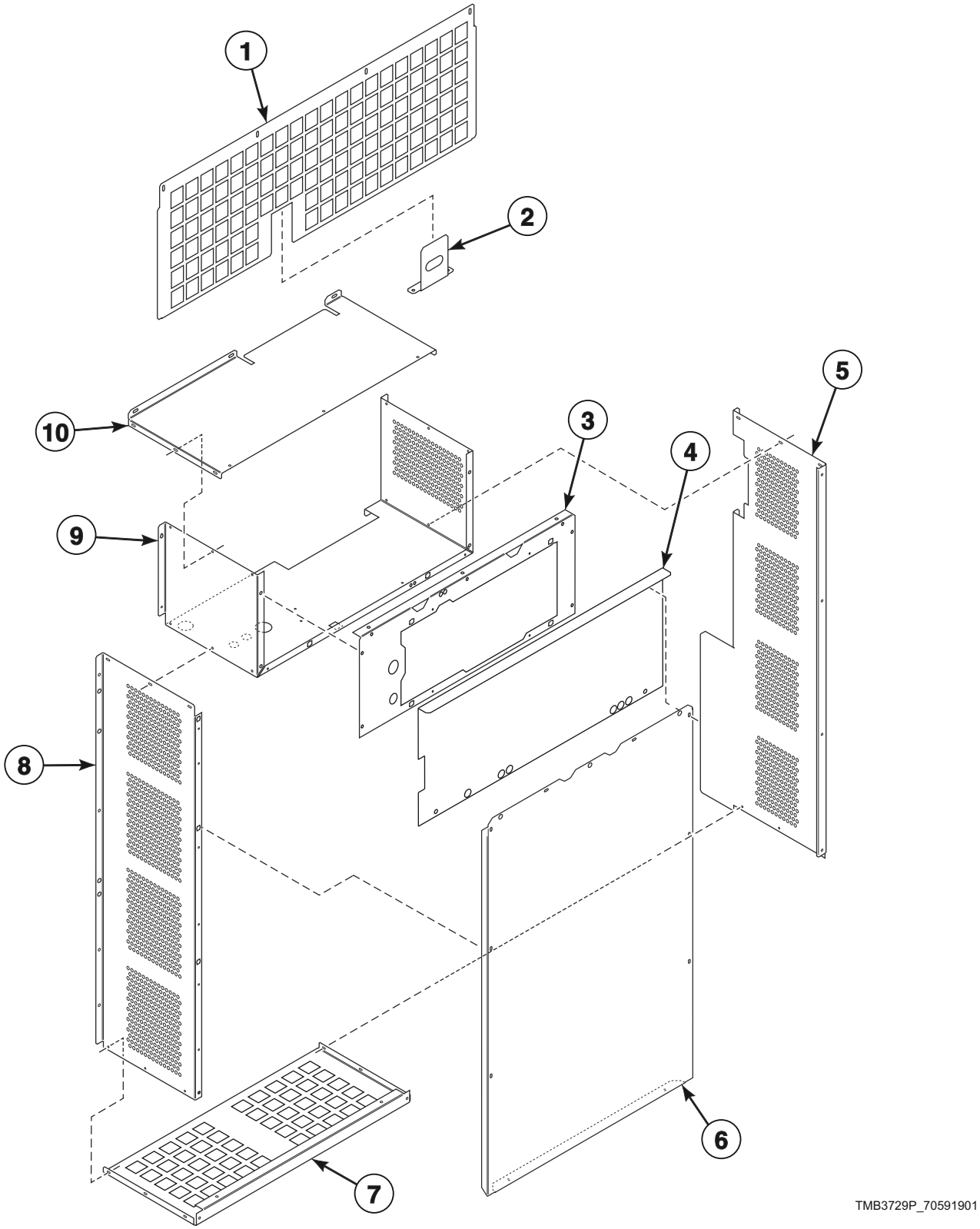

© Copyright, Alliance Laundry Systems LLC – DO NOT COPY or TRANSMIT

Rear Panel and Belt Guard Components

REF	PART NO.	DESCRIPTION	COMMENTS
1	44300301	Stove Grate	Gas models
	44300302	Stove Grate	Steam models
	44305601	Stove Grate	Electric models
2	44327601	Pipe Bracket	Gas models
3	44332201	Belt Guard	Middle
4	70507501	Control Tray Cover	
5	44298301	Belt Guard Side Panel	Left
6	44269201	Guard Panel	Rear
	44269202	Guard Panel	Rear with fire suppression system
7	44298401	Belt Guard	Bottom
8	44301101	Belt Guard Side Panel	Right
9	44332301	Guard Panel	Middle
10	44314301	Belt Guard	Top

© Copyright, Alliance Laundry Systems LLC – DO NOT COPY or TRANSMIT

Door Assemblies

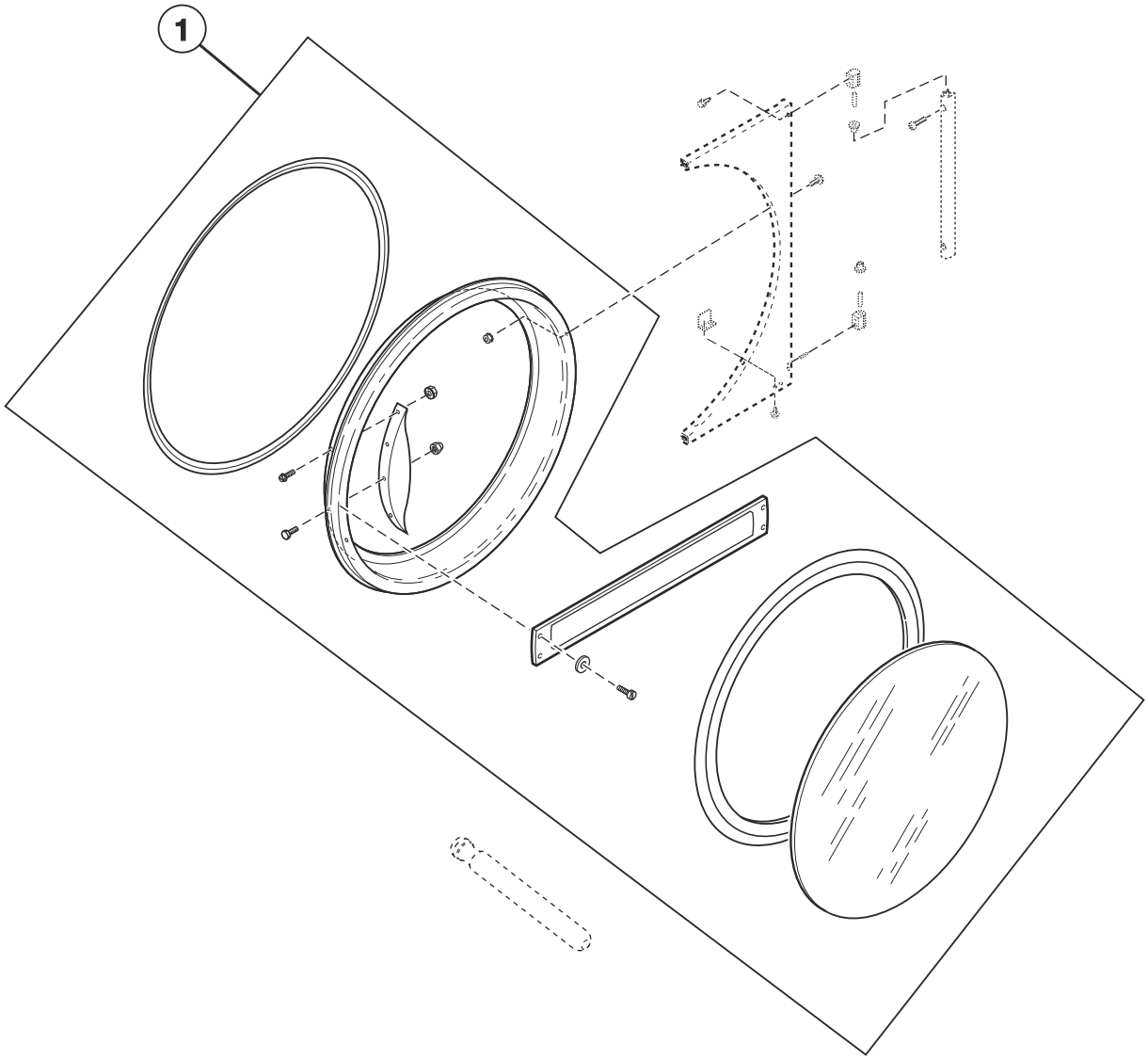

TMB3152P_70591901

© Copyright, Alliance Laundry Systems LLC – DO NOT COPY or TRANSMIT

Door Assemblies

REF	PART NO.	DESCRIPTION	COMMENTS
1	44028906P	Door Assembly	Design 3 S models; Stainless steel
	44354701	Door Assembly	S models; Stainless steel; Design 5
	44028908	Door Assembly	Design 3 S models; Chrome
	44354702P	Door Assembly	S models; Chrome; Design 5
	44266701P	Door Assembly	U models; Stainless steel; Design 3
	44354703	Door Assembly	U models; Stainless steel; Design 5
	44266702P	Door Assembly	U models; Chrome; Design 3
	44354704	Door Assembly	U models; Chrome; Design 5
	44058105P	Door Assembly	H models; Stainless steel; Design 3
	44354705	Door Assembly	H models; Stainless steel; Design 5
	44058107P	Door Assembly	H models; Stainless steel with green trim; Design 3
	44354707	Door Assembly	H models; Stainless steel with green trim; Design 5
	44058106P	Door Assembly	H models; Chrome; Design 3
	44354706	Door Assembly	H models; Chrome; Design 5
	44058108	Door Assembly	H models; Chrome with green trim; Design 3
	44354708	Door Assembly	H models; Chrome with green trim; Design 5
	44028907P	Door Assembly	B models
	44292302LGP	Door Assembly	P models; Light gray
	44292302B	Door Assembly	P models; Use with stainless steel front panel

© Copyright, Alliance Laundry Systems LLC – DO NOT COPY or TRANSMIT

Door Components

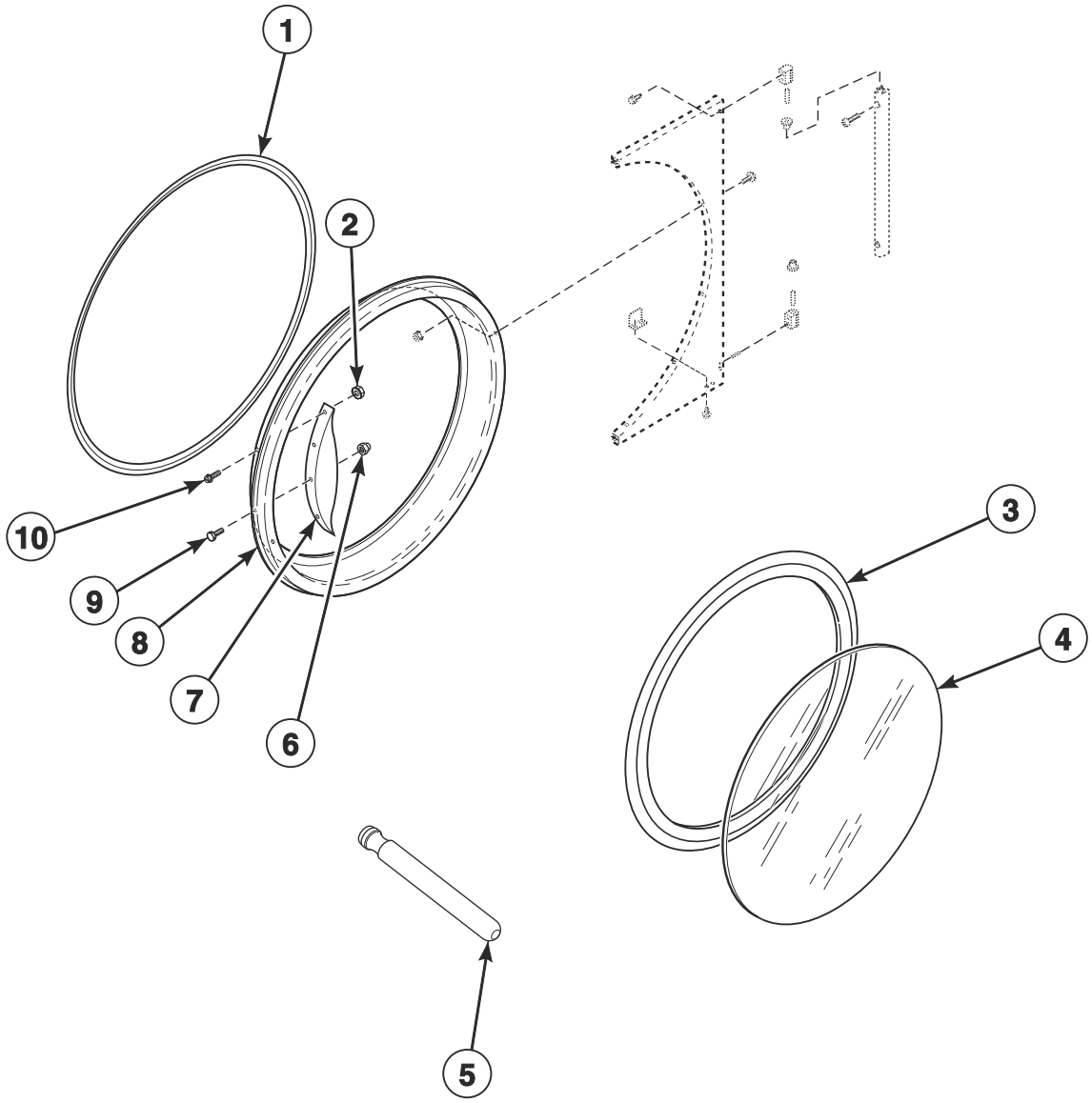

TMB3609P_70591901

© Copyright, Alliance Laundry Systems LLC – DO NOT COPY or TRANSMIT

Door Components

REF	PART NO.	DESCRIPTION	COMMENTS
	70650401	Door Glass Label	H models; Design 5
	70707701	Door Glass Label	S models
	70707501	Max Fill Line Label	
1	70296802	Door Ring Gasket	H models with chrome handle
	44008201P	Door Ring Gasket	All other models
2	44088001	Nut	B, H and S models; 4 required
3	70211902P	Door Seal Kit	Use Loctite 414 for seal
4	44008402P	Door Glass	H models; Design 3
	44008403	Door Glass	H models; Green trim; Design 3
	44008405	Door Glass	H models; Green trim; Design 5
	44008404	Door Glass	B models; Orange trim
	44008401P	Door Glass	All other models; Design 5 H models
5	M4221P4	Door Glass Installation Tool	
6	M414215	Nut	
7	70521102	Door Handle	H models; Design 3
	44370601	Door Handle	H models; Design 5
	44007901	Door Handle	B and S models
	44263801	Door Handle	U models; Use 901620 Screw, 800465 Washer, 803871 Screw and 44088001 Nut to attach; 90-degree chrome pull handle
8	44326001	Door Ring Assembly	H and S models; Stainless steel; Design 3
	44326005	Door Ring Assembly	H and S models; Chrome; Design 3
	44326002	Door Ring Assembly	U models; Design 3
	44326006	Door Ring Assembly	U models; Chrome; Design 3
	44326004B	Door Ring Assembly	B models
	44326007LG	Door Ring and Handle Assembly	P models; Light gray
	44326007B	Door Ring and Handle Assembly	P models; Use with stainless steel and white front panel; Black
9	M400661	Screw	Door strike
10	70442101	Screw	B, H and S models; 4 required

© Copyright, Alliance Laundry Systems LLC – DO NOT COPY or TRANSMIT

Hinge Components - Design 3 Models

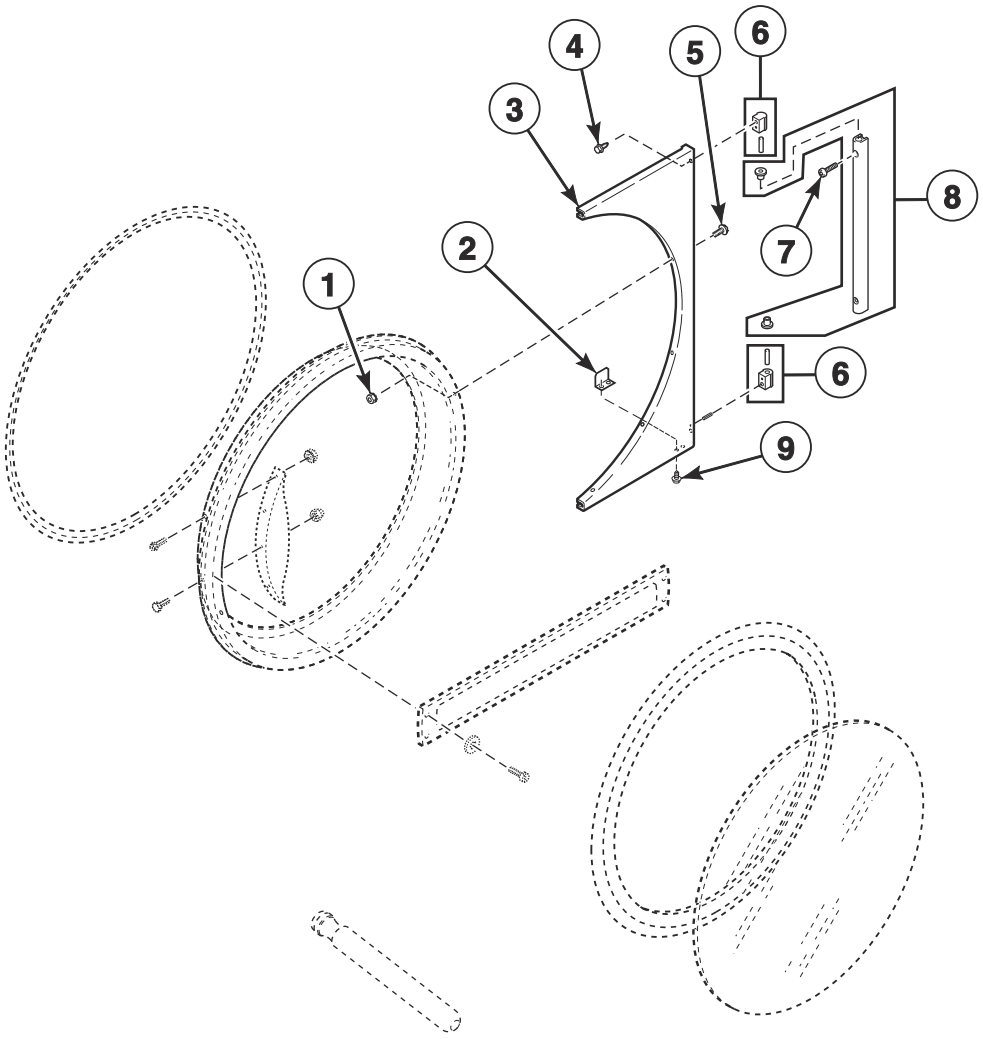

TMB3091PA_70591901

© Copyright, Alliance Laundry Systems LLC – DO NOT COPY or TRANSMIT

Hinge Components - Design 3 Models

REF	PART NO.	DESCRIPTION	COMMENTS
1	44088001	Nut	6 required
2	70215001P	Door Switch Actuator Kit	
3	44075208B	Door Hinge Assembly	Black; B models; P models with white and stainless steel front panels
	44075203*	Door Hinge Assembly	H, S and U models
	44075211	Door Hinge Assembly	H, S and U models; Stainless steel
	44075208LG	Door Hinge Assembly	P and U models; Light gray
4	70442101	Screw	3 required
5	44349101	Screw	6 required
6	M4773P3	Hinge Cam Kit	Black; B models; P models with white and stainless steel front panels
	M4772P3	Hinge Cam Kit	H, P, S and U models
7	70409801	Screw	Black; B models; P models with white and stainless steel front panels; 2 required
	70033502	Screw	H, P, S and U models; 2 required
8	44035002	Door Hinge Lug Assembly	Black; B models; P models with white and stainless steel front panels
	44035001	Door Hinge Lug Assembly	H, P, S and U models
9	70058501	Pop Rivet	2 required

*** Add Letter To Designate Color. Q - Bisque W - White**

© Copyright, Alliance Laundry Systems LLC – DO NOT COPY or TRANSMIT

Hinge Components - Design 5 Models

H, S and U Models

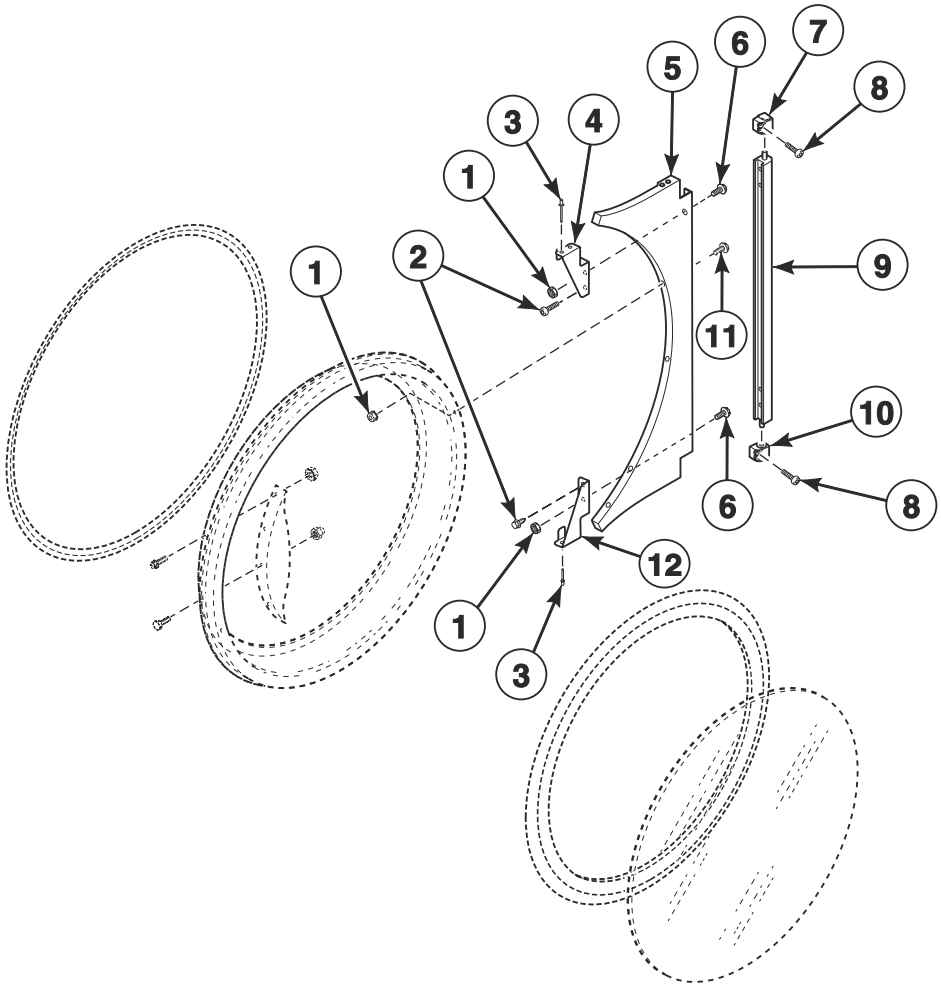

TMB3805P_70591901

© Copyright, Alliance Laundry Systems LLC – DO NOT COPY or TRANSMIT

Hinge Components - Design 5 Models

REF	PART NO.	DESCRIPTION	COMMENTS
1	44088001	Nut	
2	802822	Screw	
3	70058501	Pop Rivet	
4	70632001	Upper Hinge Gusset	
5	44366606W	Door Hinge Assembly	White
	44366604	Door Hinge Assembly	Stainless steel
	44366602LG	Door Hinge Assembly	Light gray; U models
	44366608	Door Hinge Assembly	Chrome
6	70640201	Screw	
7	70639301	Upper Lug Assembly	Use with 2 of item 8
8	70640301	Screw	
9	70640401	Center Hinge Lug Assembly	
10	70639302	Lower Lug Assembly	Use with 2 of item 8
11	44349101	Screw	
12	70632002	Lower Hinge Gusset	

© Copyright, Alliance Laundry Systems LLC – DO NOT COPY or TRANSMIT

Cylinder and Trunnion Components

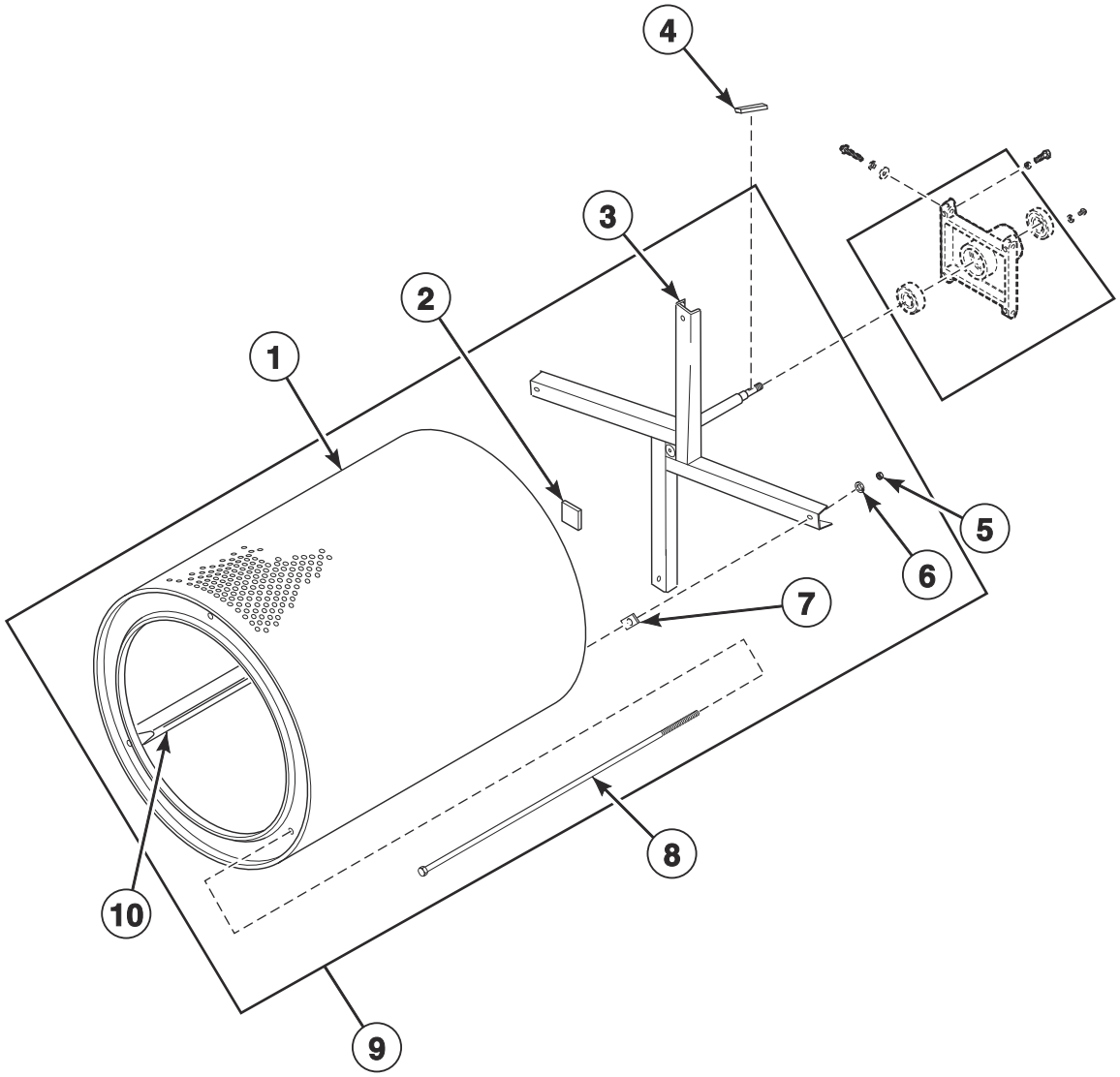

TMB3796P_70591901

© Copyright, Alliance Laundry Systems LLC – DO NOT COPY or TRANSMIT

Cylinder and Trunnion Components

REF	PART NO.	DESCRIPTION	COMMENTS
1	44057201P	Cylinder Kit	Galvanized; Non-moisture sensing
	44057301P	Cylinder Kit	Stainless steel; Non-moisture sensing
	44198301P	Cylinder Assembly	Galvanized; Moisture sensing
	44198302	Cylinder Assembly	Stainless steel; Moisture sensing
2	M402144	Felt Pad	
3	44208001	Trunnion Assembly	Spider; Non-moisture sensing
	44207901P	Trunnion Assembly	Moisture sensing
4	M400008	Key	Half moon
5	M404993	Nut	
6	M400015	Washer	4 required
7	M401402	Spacer	Adjustment between cylinder and trunnion
8	M404992	Rib Rod	
9	44195701P	Cylinder and Trunnion Assembly	Galvanized; Non-moisture sensing
	44195702P	Cylinder and Trunnion Assembly	Stainless steel; Non-moisture sensing
	44195705P	Cylinder and Trunnion Assembly	Galvanized; Moisture sensing
	44195706	Cylinder and Trunnion Assembly	Stainless steel; Moisture sensing
10	44191202	Cylinder Rib Assembly	Moisture sensing
	M403003	Cylinder Rib	Non-moisture sensing; Galvanized
	44076301	Cylinder Rib	Non-moisture sensing; Stainles steel

© Copyright, Alliance Laundry Systems LLC – DO NOT COPY or TRANSMIT

Bearing Components

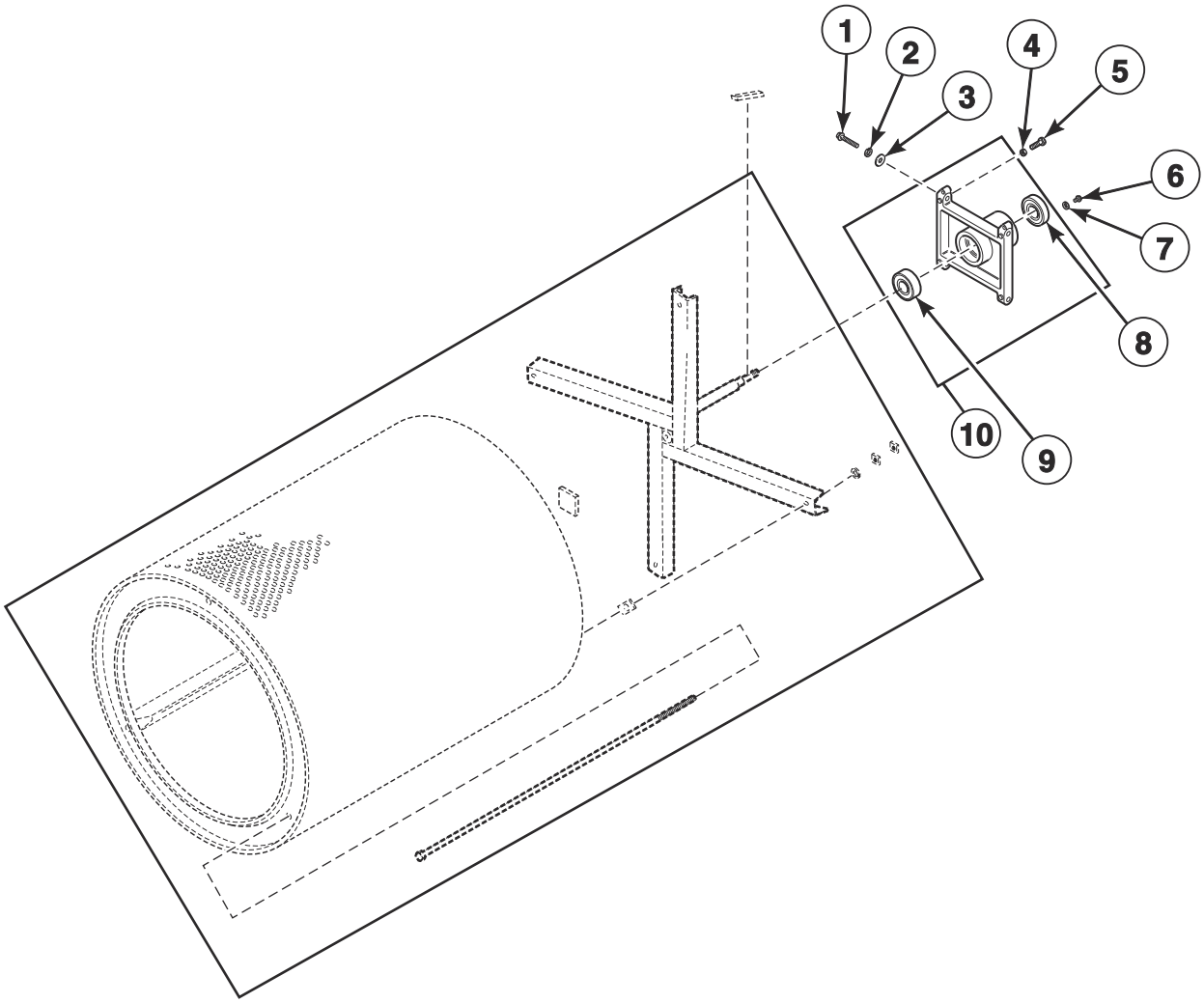

TMB2123PA

© Copyright, Alliance Laundry Systems LLC – DO NOT COPY or TRANSMIT

Bearing Components

REF	PART NO.	DESCRIPTION	COMMENTS
	M4640P3	Trunnion and Bearing Assembly	Non-moisture sensing
	44336301	Trunnion and Bearing Assembly	Moisture sensing
	M4644P3	Housing and Trunnion Assembly	Includes bearing; Non-moisture sensing
	44336302	Housing and Trunnion Assembly	Moisture sensing
1	M400063	Screw	4 required
2	M400015	Washer	4 required
3	70261401	Washer	4 required
4	M400026	Nut	4 required
5	M400650	Bolt	2 required
6	70187201	Screw	4 required
7	20103	Washer	4 required
8	F100136P	Bearing	
9	44041901P	Ball Bearing	
10	44375001P	Trunnion Assembly	Includes bearing

© Copyright, Alliance Laundry Systems LLC – DO NOT COPY or TRANSMIT

Moisture Sensing Components

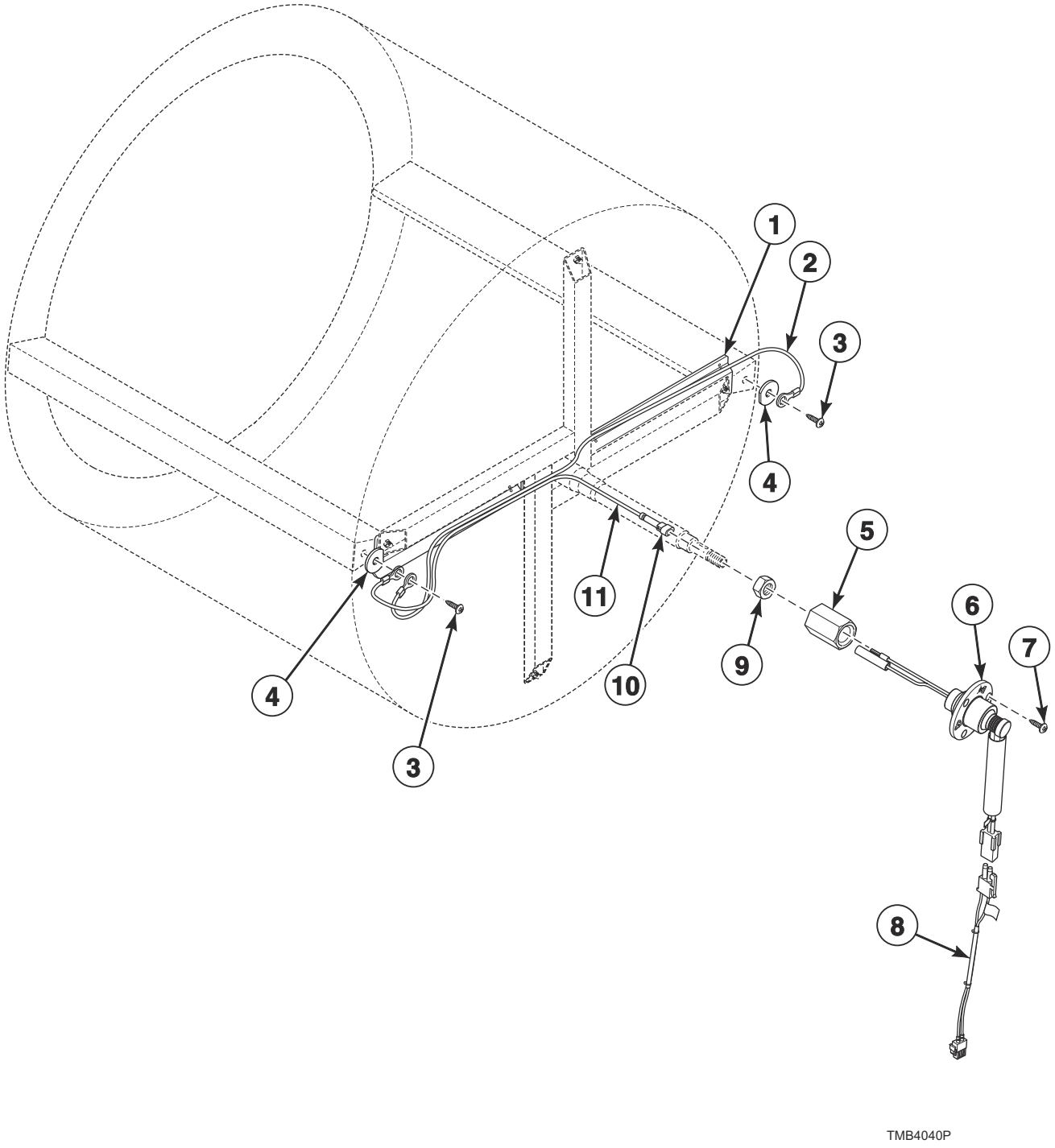

© Copyright, Alliance Laundry Systems LLC – DO NOT COPY or TRANSMIT

Moisture Sensing Components

REF	PART NO.	DESCRIPTION	COMMENTS
	44344702	Moisture Sensing Harness Kit	
	55881	Harness Strap	Use with item 1
1	44239101	Wireway Channel	
2	44208601	Rib Wire	
3	44338901	Screw	
4	44238902	Washer	
5	44224401	Slip Ring Holder	
6	44222702	Slip Ring Assembly	
7	70442101	Screw	
8	44333902	Moisture Sensor Harness	Goes from item 6 to main harness
9	M400033	Nut	
10	44370401	1 Circuit Plug Housing	
11	44208702	Shaft Wire	

© Copyright, Alliance Laundry Systems LLC – DO NOT COPY or TRANSMIT

Drive Motor Components

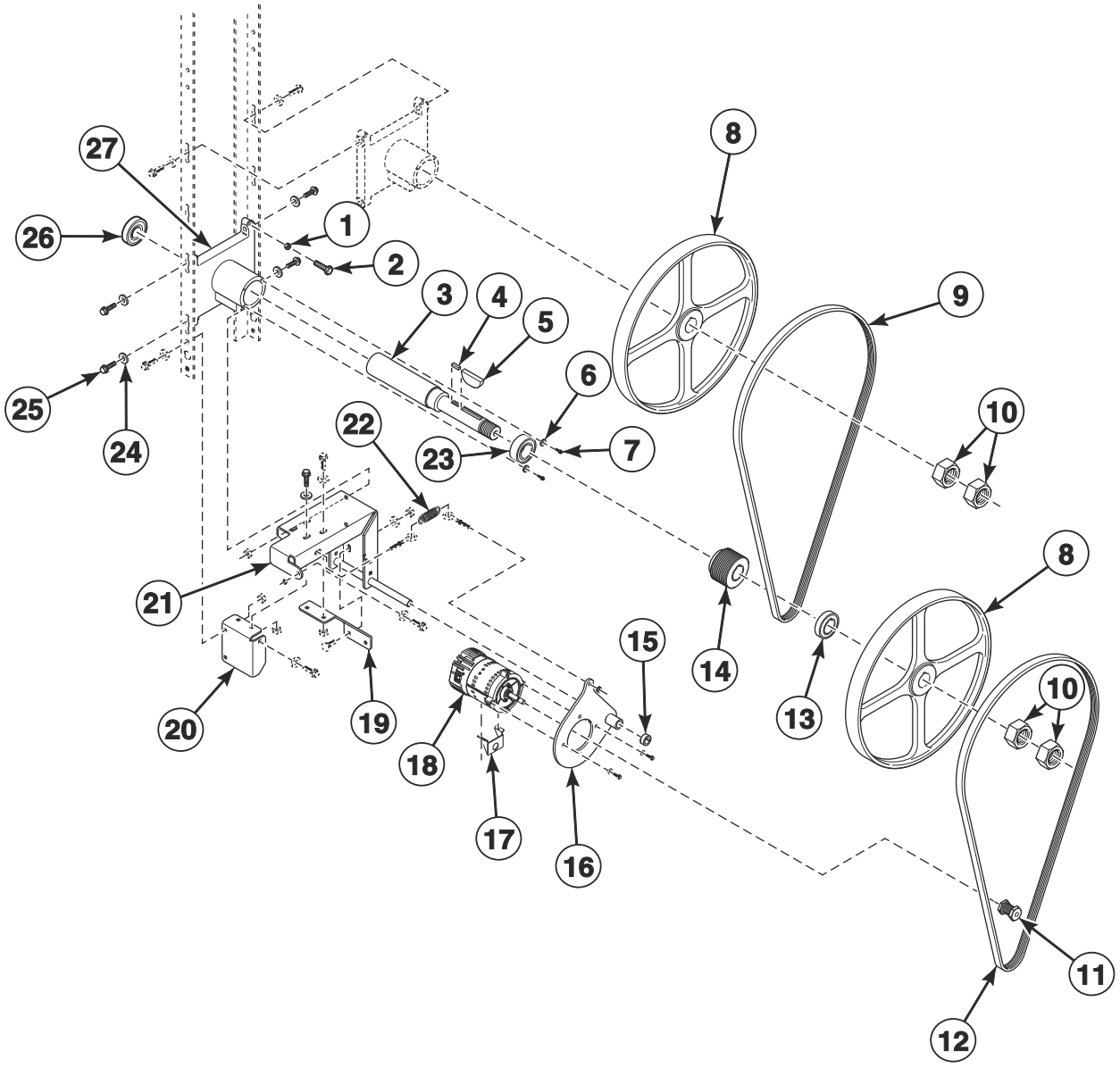

TMB4043P

© Copyright, Alliance Laundry Systems LLC – DO NOT COPY or TRANSMIT

Drive Motor Components

REF	PART NO.	DESCRIPTION	COMMENTS
	44333202	Nut	Use with motor pulley
	44335304	Inverter Motor Harness	Cylinder
	44375001P	Trunnion Assembly	Includes items 6, 7, 23, 26 and 27
1	M400026	Nut	
2	M400650	Bolt	
3	44303102	Idler Shaft	
4	44309301	Key	
5	M400008	Key	
6	20103	Washer	
7	70187201	Screw	
8	44289502	Pulley	
9	44333301	V-Belt	Upper
10	M400033	Nut	
11	44267601	Motor Pulley	F75 models
	70559102	Motor Pulley	All other models
12	44309402	V-Belt	Lower
13	44306801	Idler Spacer	
14	44270201	Micro V Pulley	
15	70467001	Shaft Collar	
16	44311501	Motor Pivot Plate Weldment	
17	44317901	Motor Conduit Bracket	
18	44259701P	Drive Motor	F75 models; 1.5 HP; 230 Volt/3 Phase
	44259801P	Drive Motor	F75 models; 1.5 HP; 380-460 Volt/3 Phase
	44259501P	Drive Motor	All other models; .50 HP; 120, 230 Volt/1 Phase
	44259601P	Drive Motor	All other models; .50 HP; 380-460 Volt/3 Phase
19	44325701	Motor Pivot Gusset Bracket	
20	44325801	Motor Pivot Support Bracket	
21	44327001	Motor Pivot Bracket Weldment	
22	F8440701	Extension Spring	
23	M413923P	Bearing	
24	70261401	Washer	4 required
25	805213	Screw	4 required
26	44041901P	Ball Bearing	
27	M413826P	Trunnion Housing	

© Copyright, Alliance Laundry Systems LLC – DO NOT COPY or TRANSMIT

Blower and Exhaust Components

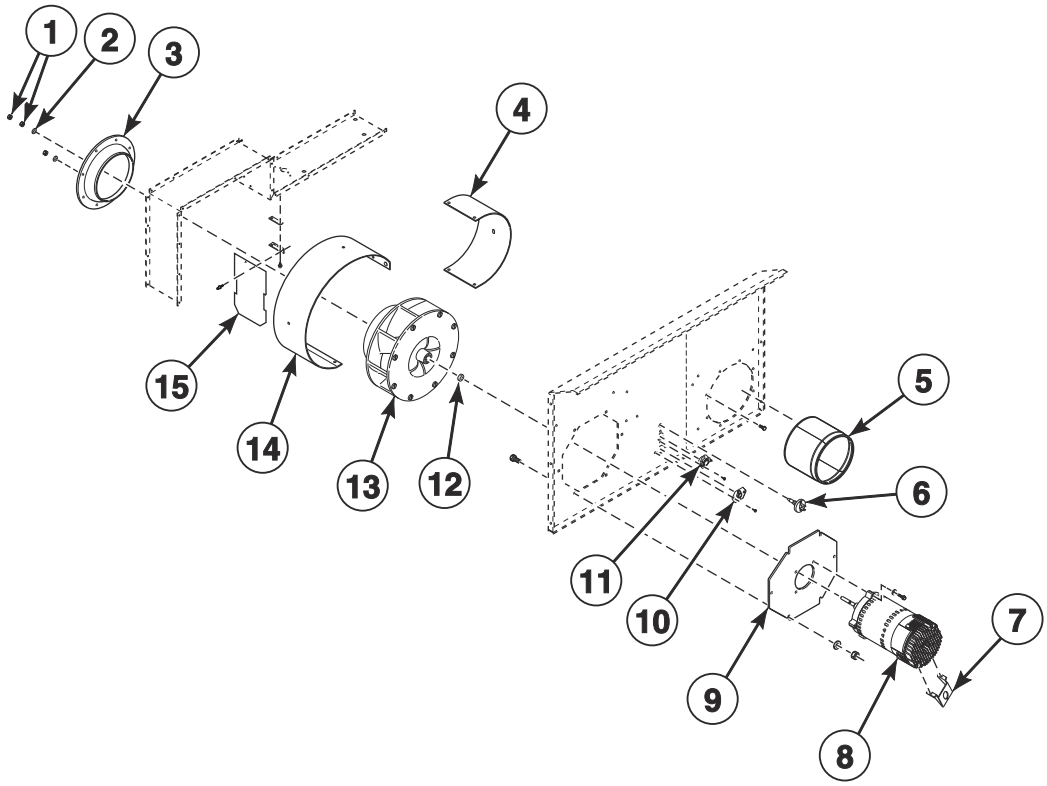

TMB3730P

© Copyright, Alliance Laundry Systems LLC – DO NOT COPY or TRANSMIT

Blower and Exhaust Components

REF	PART NO.	DESCRIPTION	COMMENTS
	44335305	Inverter Motor Harness	Fan
1	M400022	Nut	
2	F431131	Washer	
3	44305201	Blower Inlet Cone	F75 models
	70303101	Blower Inlet Cone	All other models
4	44308402	Air Exhaust Deflector	F75 models
	44308401	Air Exhaust Deflector	All other models
5	44305002	Thimble Assembly	F75 models
	44327901	Exhaust Pipe Assembly	All other models
6	M414704	Thermistor	
7	44317901	Motor Conduit Bracket	
8	44259301P	Fan Motor	F75 models; 1.5 HP; 230 Volt/3 Phase
	44259401P	Fan Motor	F75 models; 1.5 HP; 380-460 Volt/3 Phase
	70478701P	Fan Motor	All other models; .50 HP; 120, 230 Volt/1 Phase
	70484901P	Fan Motor	All other models; .50 HP; 380-460 Volt/3 Phase
9	44311301	Blower Motor Mounting Plate	F75 models
	70380801	Blower Motor Mounting Plate	All other models
10	70530905	Limit Thermostat	
11	44328003	Limit Thermostat	
12	70599301	Fan Spacer	
13	44267201	Blower Assembly	F75 models
	70302201P	Blower Assembly	All other models
14	44303901	Blower Housing Scroll	F75 models
	44303801	Blower Housing Scroll	All other models
15	44280302	Damper Assembly	F75 models
	44280301	Damper Assembly	All other models

© Copyright, Alliance Laundry Systems LLC – DO NOT COPY or TRANSMIT

Airflow Switch Assembly

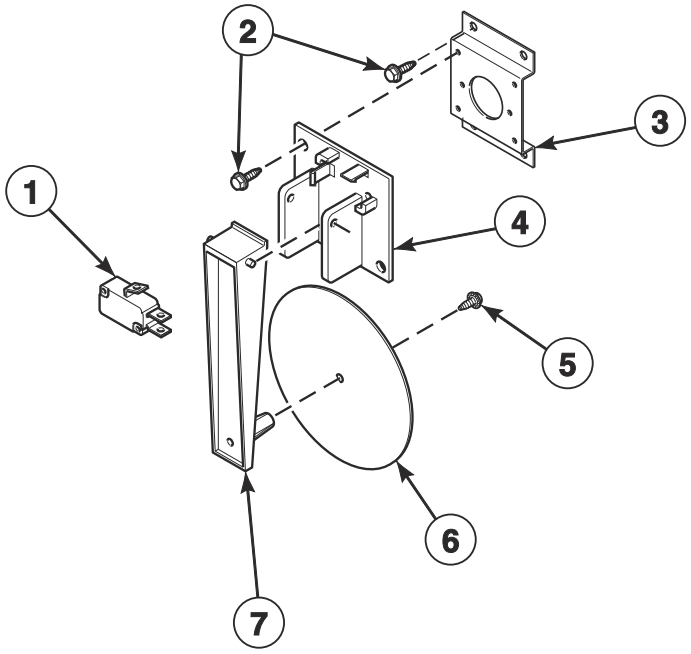

TMB3636P_70591901

© Copyright, Alliance Laundry Systems LLC – DO NOT COPY or TRANSMIT

Airflow Switch Assembly

REF	PART NO.	DESCRIPTION	COMMENTS
	70429602	Airflow Switch Assembly	Includes items 1 and 4-7
1	70411901	Switch	
2	430497	Screw	6 required
3	70356301	Switch Bracket	
4	70319602	Airflow Switch and Arm Bracket	
5	430757	Screw	
6	70319202	Airflow Switch Vane	
7	70319401	Airflow Switch Arm	

© Copyright, Alliance Laundry Systems LLC – DO NOT COPY or TRANSMIT

Gas Heater Components

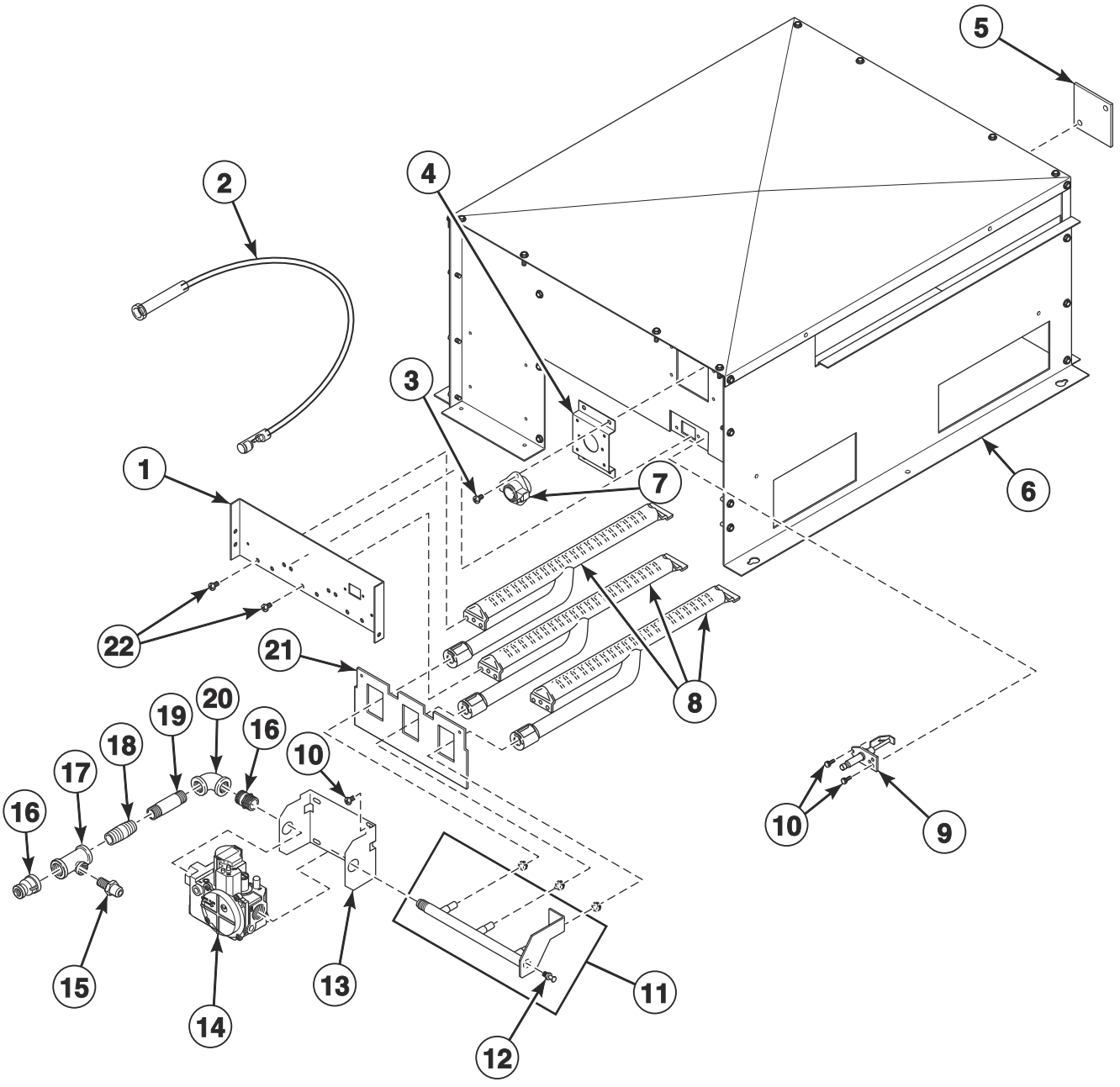

TMB3599P_70591901

© Copyright, Alliance Laundry Systems LLC – DO NOT COPY or TRANSMIT

Gas Heater Components

REF	PART NO.	DESCRIPTION	COMMENTS
	70539501	Notice Label	Australian models; Natural Gas (N.G.)
	70544901	Notice Label	Australian models; Liquid Petroleum Gas (L.P.)
	D503887	Label	Australian models; Gas
	44178801	Adapter	CE and Australian models; Used to convert from standard to metric thread
	44328802	L.P. Conversion Kit	CSA and AGA 75 pound models; 0-2000 feet
	44330302	L.P. Conversion Kit	IEC 75 pound models; 0-2000 feet
	44328803	L.P. Conversion Kit	F75 models
	70346802	Pipe Plug	F75 models
	70564304	Stove Limit Harness	
	44273502	Gas Valve Harness	Double; CE models
	44273501	Gas Valve Harness	Single
	44355101P	Direct Air Kit	
	70500401	Heat Exchanger	
1	44110301	Burner Support	
2	44239705	High Voltage Suppression Cable	
3	M402797	Screw	2 required
4	70356301	Switch Bracket	
5	70159601	Igniter Cover	
6	44135605	Gas Stove Assembly	Includes item 8
7	44328008	Limit Thermostat	
8	M410541P	Burner Assembly	3 required
9	44328701P	Spark Electrode	
10	51782	Screw	2 required
11	44263102	Spud Holder Weldment	
12	70167601	Plug	
13	44175703	Gas Valve Bracket	
14	44154501P	Gas Valve	F75 and CSA models; N.G.
	44154502P	Gas Valve	F75 and CSA models; L.P.
	44298501	Gas Valve	Australian models; N.G.
	44298504	Gas Valve	Australian models; L.P.
	44178301P	Gas Valve	CE models; N.G.
	44178302P	Gas Valve	CE models; L.P.
	44154505	Gas Valve	All other models; N.G.
	44154506	Gas Valve	All other models; L.P.
15	44231601	Pressure Fitting	CE and Australian models
16	M413453	Reducer	F75 models
	70612603	Pipe Nipple	CE and Australian models
17	44231902	Pipe Tee	CE and Australian models
18	431486	Pipe Nipple	T market models
	F421921	Nipple	All other models
19	70612602	Pipe Nipple	CE and Australian models
	70210201	Pipe Nipple	T market models
	70612601	Pipe Nipple	All other models
20	70079601	Elbow	T market models
	70612501	Street Elbow	All other models
21	44135201	Rear Access Plate	
22	70240301	Screw	6 required

© Copyright, Alliance Laundry Systems LLC – DO NOT COPY or TRANSMIT

Burner Orifices

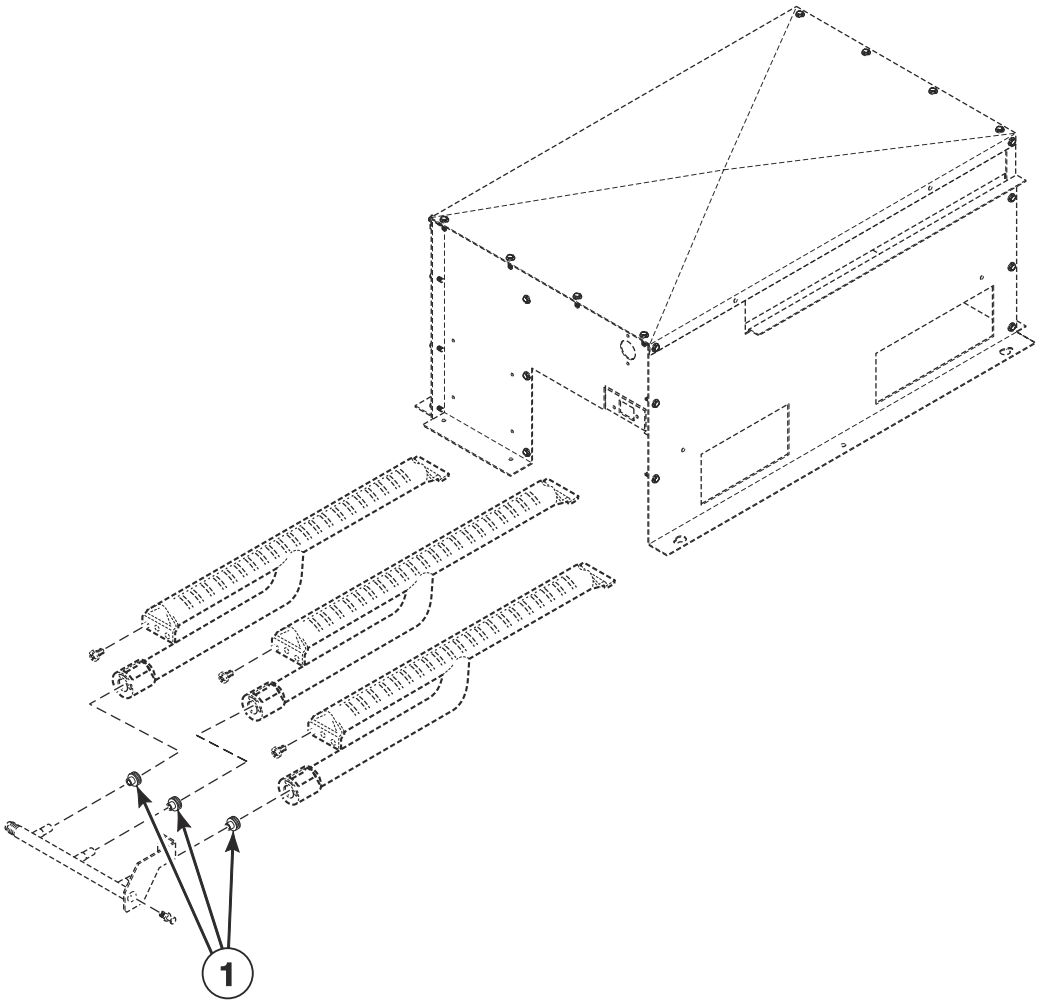

TMB3600P_70591901

© Copyright, Alliance Laundry Systems LLC – DO NOT COPY or TRANSMIT

Burner Orifices

REF	PART NO.	DESCRIPTION	COMMENTS
	44357503	High Altitude Orifice Kit	CSA 75 pound Natural Gas (N.G.) models
	44357504	High Altitude Orifice Kit	CSA 75 pound Liquid Petroleum Gas (L.P.) models
	44357505	High Altitude Orifice Kit	Model UTF75N
	44357506	High Altitude Orifice Kit	Model UTF75L
1	70684134	Burner Orifice	Classic 75 pound models; N.G.; Drill no. 28 (3.57 mm); 0-2,000 feet
	70684131	Burner Orifice	Classic 75 pound models; N.G.; 3.40 mm; 2,001-4,000 feet
	70684130	Burner Orifice	Classic 75 pound models; N.G.; 3.30 mm; 4,001-6,000 feet
	70684128	Burner Orifice	Classic 75 pound models; N.G.; Drill no. 1/8 (3.18 mm); 6,001-8,000 feet
	70684126	Burner Orifice	Classic 75 pound models; N.G.; Drill no. 31 (3.05 mm); 8,001-10,000 feet
	70684110	Burner Orifice	Classic 75 pound models with 2nd digit A, G, H, J, K, L and T; L.P.; Drill no. 44 (2.18 mm); 0-2,000 feet
	70684109	Burner Orifice	Classic 75 pound models with 2nd digit A, G, H, J, K, L and T; L.P.; Drill no. 45 (2.08 mm); 2,001-4,000 feet
	70684107	Burner Orifice	Classic 75 pound models with 2nd digit A, G, H, J, K, L and T; L.P.; Drill no. 47 (1.99 mm); 4,001-6,000 feet
	70684106	Burner Orifice	Classic 75 pound models with 2nd digit A, G, H, J, K, L and T; L.P.; Drill no. 48 (1.93 mm); 6,001-8,000 feet
	70684105	Burner Orifice	Classic 75 pound models with 2nd digit A, G, H, J, K, L and T; L.P.; Drill no. 49 (1.85 mm); 8,001-10,000 feet
	70684104	Burner Orifice	CE classic 75 pound models; L.P.; Drill no. 50 (1.78 mm); 0-2,000 feet
	70684158	Burner Orifice	CE classic 75 pound models; L.P.; Drill no. 51 (1.70 mm); 2,001-4,000 feet
	70684103	Burner Orifice	CE classic 75 pound models; L.P.; Drill no. 52 (1.61 mm); 4,001-6,000 feet
	70684102	Burner Orifice	CE classic 75 pound models; L.P.; Drill no. 1/16 (1.59 mm); 6,001-8,000 feet
	70684101	Burner Orifice	CE classic 75 pound models; L.P.; Drill no. 53 (1.51); 8,001-10,000 feet
	70684108	Burner Orifice	Classic 75 pound J market models; L.P.; Drill no. 46 (2.06 mm); 0-2,000 feet
	70684138	Burner Orifice	Eco models; N.G.; Drill no. 24 (3.86 mm); 0-2,000 feet
	70684135	Burner Orifice	Eco models; N.G.; Drill no. 27 (3.66 mm); 2,001-4,000 feet
	70684134	Burner Orifice	Eco models; N.G.; Drill no. 28 (3.57 mm); 4,001-6,000 feet
	70684132	Burner Orifice	Eco models; N.G.; Drill no. 29 (3.45 mm); 6,001-8,000 feet
	70684130	Burner Orifice	Eco models; N.G.; 3.30 mm; 8,001-10,000 feet
	70684142	Burner Orifice	F75 models; N.G.; Drill no. 20 (4.09 mm); 0-2,000 feet
	70684139	Burner Orifice	F75 models; N.G.; Drill no. 23 (3.91 mm); 2,001-4,000 feet
	70684137	Burner Orifice	F75 models; N.G.; Drill no. 25 (3.80 mm); 4,001-6,000 feet
	70684135	Burner Orifice	F75 models; N.G.; Drill no. 27 (3.66 mm); 6,001-8,000 feet
	70684133	Burner Orifice	F75 models; N.G.; 3.50 mm; 8,001-10,000 feet
	70684114	Burner Orifice	F75 models; L.P.; Drill no. 42 (2.37 mm); 0-2,000 feet
	70684112	Burner Orifice	F75 models; L.P.; Drill no. 43 (2.26 mm); 2,001-4,000 feet
	70684110	Burner Orifice	F75 models; L.P.; Drill no. 44 (2.18 mm); 4,001-6,000 feet
	70684109	Burner Orifice	F75 models; L.P.; Drill no. 45 (2.08 mm); 6,001-8,000 feet
	70684107	Burner Orifice	F75 models; L.P.; Drill no. 47 (1.99 mm); 8,001-10,000 feet

© Copyright, Alliance Laundry Systems LLC – DO NOT COPY or TRANSMIT

Electric Heater Components

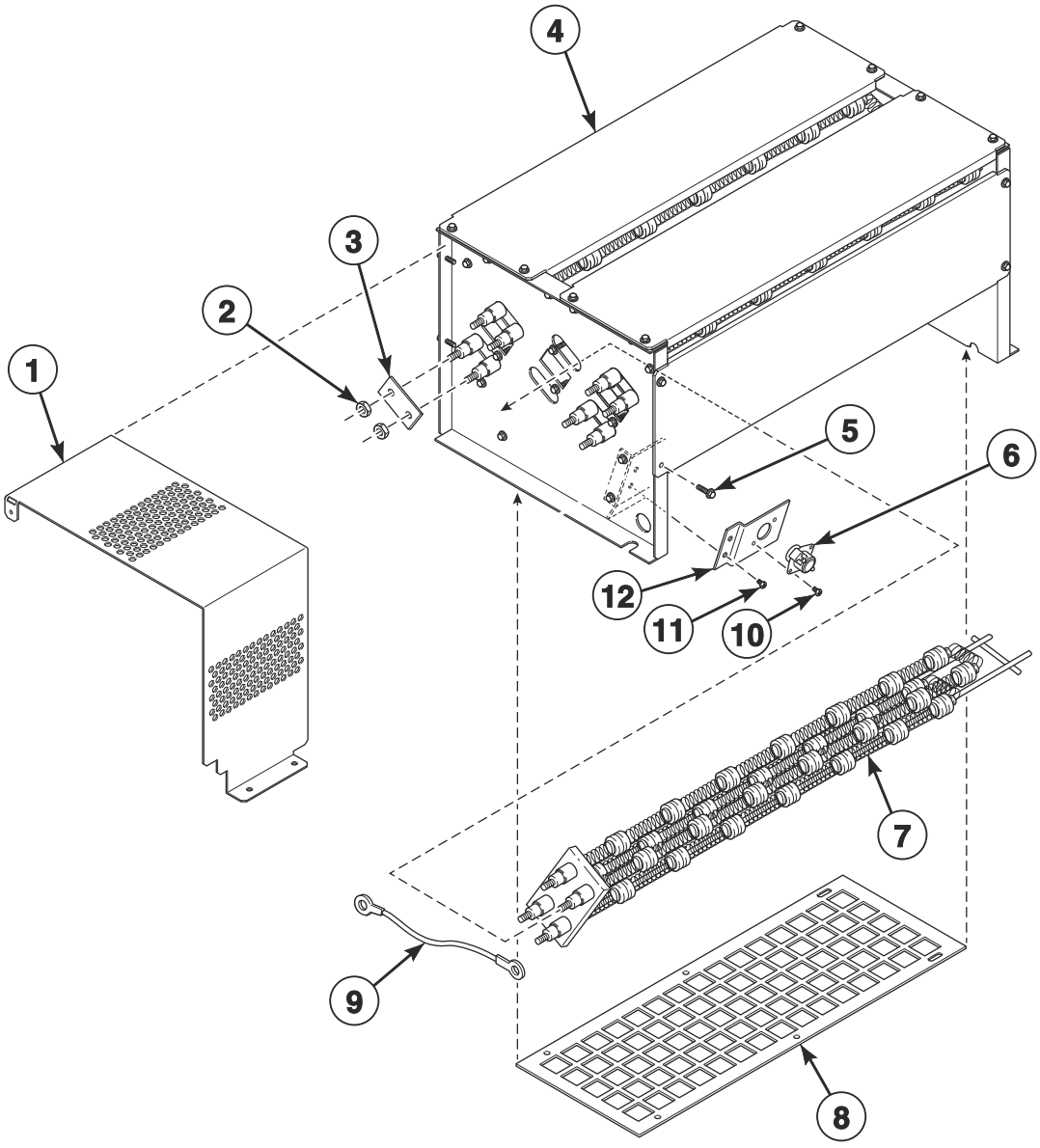

TMB3587P_70591901

© Copyright, Alliance Laundry Systems LLC – DO NOT COPY or TRANSMIT

Electric Heater Components

REF	PART NO.	DESCRIPTION	COMMENTS
	44355101P	Direct Air Kit	
	70500401	Heat Exchanger	
	70564304	Stove Limit Harness	
	44281706	Harness	200-240 Volt; Contactor to element
	44281707	Harness	Contactor element
1	44327302	Electric Wrap	Classic models
	44327301	Electric Wrap	Eco and medium electric models
2	70054	Nut	
3	M400869	Jumper Strip	380-480 Volt 3 required; 200-240 Volt 6 required
4	44242101	Electric Stove Assembly	Classic models
	44252501	Electric Stove Assembly	Eco and medium electric models
5	70240301	Screw	
6	44328006	Limit Thermostat	
7	44232801	Heater Element	Classic models; 3 required; 12 kW; 208 Volt heater element for 200-208 Volt
	44232802	Heater Element	Classic models; 3 required; 12 kW; 220 Volt heater element for 380 and 440 Volt
	44232803	Heater Element	Classic models; 3 required; 12 kW; 240 Volt heater element for 230-240 Volt and 400-415 and 460-480 Volt
	44258701	Heater Element	Eco models; 3 required; 7 kW; 220 Volt heater element for 380 and 440 Volt
	M412955P	Heater Element	Eco models; 3 required; 7 kW; 240 Volt heater element for 230-240, 400-415 or 460-480 Volt
	44263201P	Heater Element	Eco models; 3 required; 7 kW; 208 Volt heater element for 200-208 Volt
	M410939P	Heater Element	Medium electric models; 3 required; 10 kW; 240 Volt heater element for 230-240 Volt, 400-415 and 460-480 Volt
	M410940P	Heater Element	Medium electric models; 3 required; 10 kW; 208 Volt heater element for 200-208 Volt
	M410941P	Heater Element	Medium electric models; 3 required; 10 kW; 220 Volt heater element for 380 and 440 Volt
8	44308802	Heating Element Screen	
9	44281708	Jumper Harness	3 inch; 380-415 Volt 4 required; 440-480 Volt 1 required
	44281709	Jumper Harness	9 inch; 440-480 Volt 1 required
10	33562	Screw	
11	430497	Screw	
12	44226101	Limit Offset Bracket	

© Copyright, Alliance Laundry Systems LLC – DO NOT COPY or TRANSMIT

Steam Heater and Valve

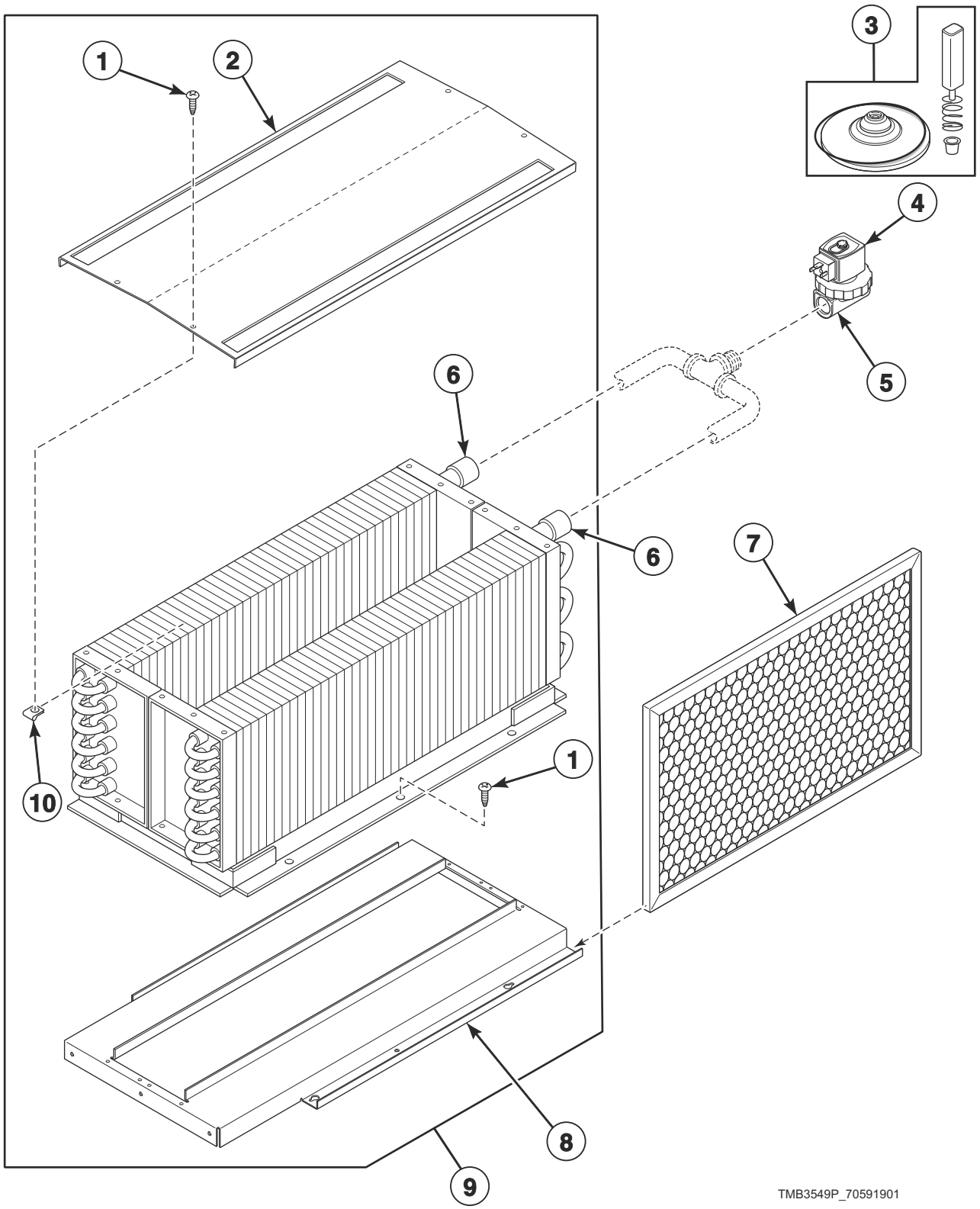

© Copyright, Alliance Laundry Systems LLC – DO NOT COPY or TRANSMIT

Steam Heater and Valve

REF	PART NO.	DESCRIPTION	COMMENTS
	70564302	Stove Limit Bypass Harness	
	F8520703	Steam Valve Harness	
	44314701	Steam Adapter Kit	IEC models
	44304801	Strain Relief	
	F8382301	DIN Valve Adapter Kit	Use with item 5
1	23008	Screw	4 required
2	M400828	Low Pressure Steam Cover	
3	F8379502	Valve Rebuild Kit	
4	F8514701	Coil	120 Volt
	F8514601P	Coil	240 Volt
5	F8322904P	Steam Valve	120 Volt
	F8322906P	Valve	240 Volt
6	M400637P	Steam Coil	2 required
7	44172001	Filter	Aluminum; 2 required; IEC models
	44104201	Air Filter	Fiberglass; 2 required; CSA models
8	44007501	Steam Stand Box	
9	44020402	Steam Heater Assembly	CRN models
	44020401P	Steam Heater Assembly	All other models
10	36020	Nut	4 required

© Copyright, Alliance Laundry Systems LLC – DO NOT COPY or TRANSMIT

Control Tray

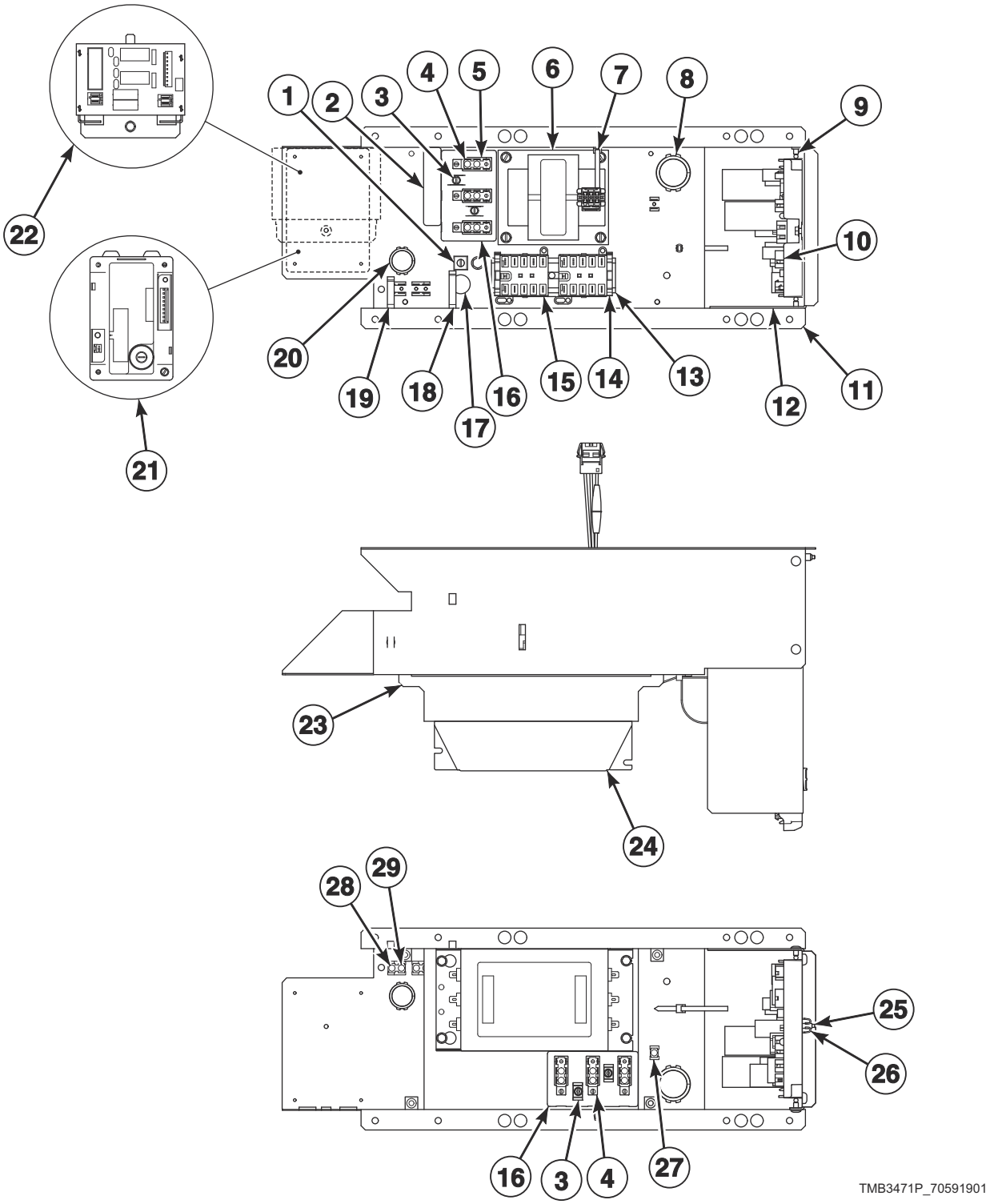

© Copyright, Alliance Laundry Systems LLC – DO NOT COPY or TRANSMIT

Control Tray

REF	PART NO.	DESCRIPTION	COMMENTS
	685837	Screw	Use with item 1
	44088001	Nut	Use with item 1
	70559303	Conversion Kit	X to B voltage
	44357401	EMI Filter Kit	CSA 75 pound models; 100-240 Volt
	44357402	EMI Filter Kit	CSA 75 pound models; 380-480 Volt
	44357403	EMI Filter Kit	F75 models; 200-240 Volt
1	M411283	Ground Lug Connector	
2	44286803	Label	L1, L2, L3
	44286801	Label	L1, N
	44286802	Wire Label	L1 L2, L1 N
	44286804	Wire Label	L1 L2, L1 N, L1 L2 L3
3	51783	Screw	
4	430642	Terminal Block	
5	70333001	Terminal Block Shield	
6	F8491101	Transformer	380-480 Volt
7	70335601	Cable Tie	
8	70346501	Bushing	
9	70058501	Pop Rivet	
10	70671701	I/O Control Assembly	
11	70492401	Control Tray	
12	70494901	Control Board Control Tray	
13	M412690	DIN Rail	
14	F8449801	End Stop	
15	70482601	Contactor	240 Volt or less: 1 required; 380 Volt or higher: 2 required
16	M413862	Insulator	
17	D516100	Label	
18	F8449501	Wire Clip	
19	F8449502	Wire Clip	
20	70178701	Snap Bushing	
21	70482002P	Ignition Control	IEC gas models
	70482001	Ignition Control	CSA gas models
22	70501801	Steam Control Assembly	Steam models
23	70533101	Filter Bracket	
24	F8591601	EMI Filter	IEC models; 100-200 and 200-240 Volt/1 Phase
	F8637501	EMI Filter	IEC models; 380-480 Volt
	F8591801	EMI Filter	F75 models; 200-240 Volt/3 Phase
25	F8206901	Screw	
26	70030501	Expansion Clip	
27	00621SG	Male Tab Terminal	
28	M400003	Pop Rivet	
29	00622SG	Terminal	

© Copyright, Alliance Laundry Systems LLC – DO NOT COPY or TRANSMIT

Accessory Box - Electric 200-240 Volt Models

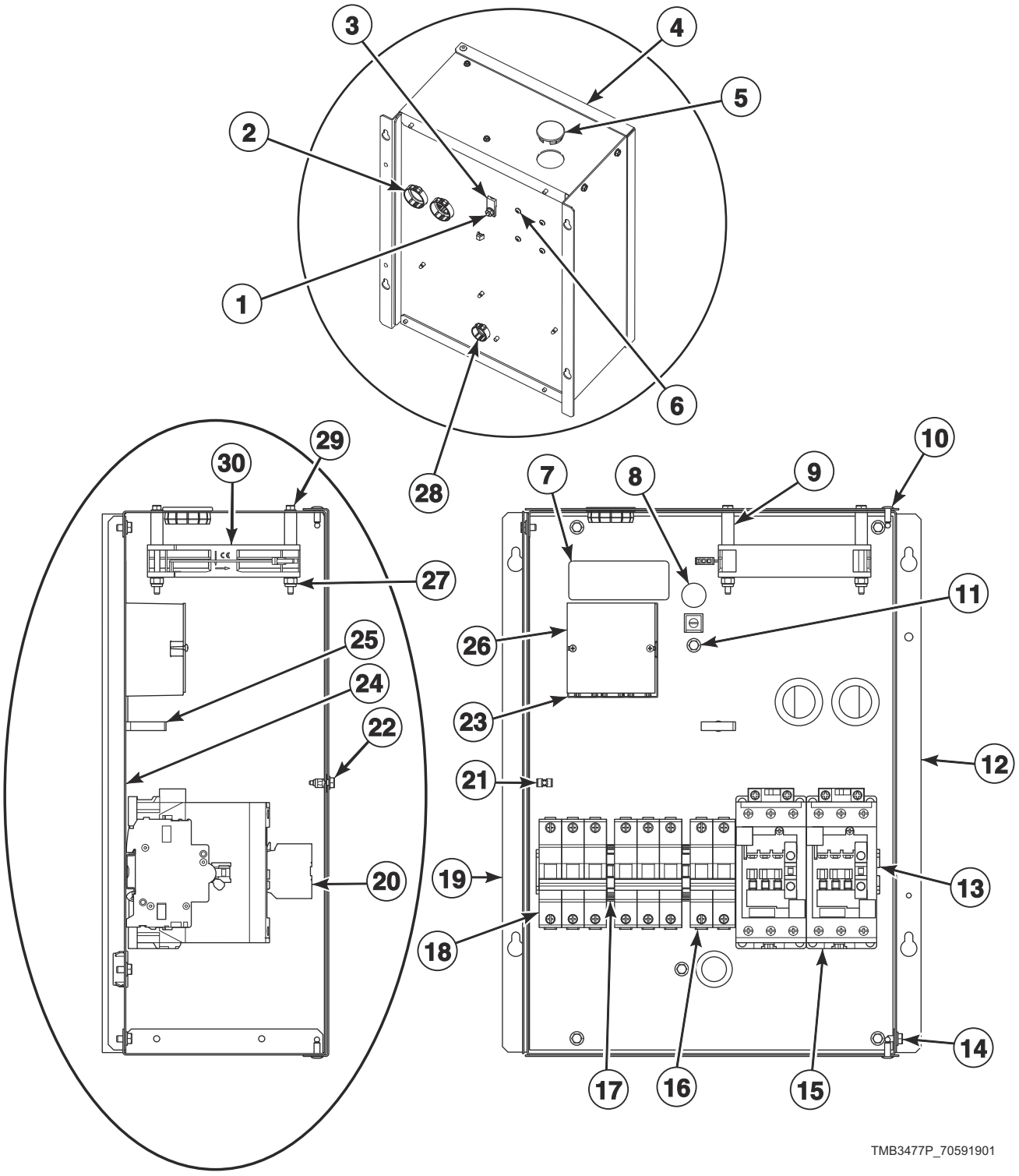

© Copyright, Alliance Laundry Systems LLC – DO NOT COPY or TRANSMIT

Accessory Box - Electric 200-240 Volt Models

REF	PART NO.	DESCRIPTION	COMMENTS
	44309003	Harness	CSA models; Power distribution block to control circuit breaker
	44309013	Harness	IEC models; Power distribution block to control circuit breaker
	44281707	Harness	Contactor to element
	44281706	Harness	Contactor to element
	44281703	Harness	Power distribution block to element circuit breaker
	44281701	Harness	Power distribution block to element circuit breaker
1	44088001	Nut	2 required
2	M402542	Snap Bushing	
3	M411283	Ground Lug Connector	
4	44134004	Contactor Box Cover	
5	70180001	Plug	
6	39733	Screw	
7	44286803	Label	3 Phase; L1, L2, L3
8	D516100	Label	
9	44328601	Sleeve	2 required
10	70058502	Pop Rivet	
11	685837	Screw	
12	44292501	Contactor Box Side	Top
13	44229701	DIN Rail	
	70058501	Pop Rivet	
14	51780	Screw	
15	70482801	Contactor	2 required
16	70488102	Circuit Breaker	25 amp
17	F8449801	End Stop	2 required
18	70488104	Circuit Breaker	2 required; 50 amp
19	44292401	Contactor Box Side	Bottom
20	44313201	Auxiliary Contact Block	
21	70030501	Expansion Clip	
22	F8206901	Screw	
23	M413865	Power Distribution Block	
24	44292601	Contactor Box Base Plate	
25	F8449502	Wire Clip	
26	44014901P	Power Distribution Block Cover	
27	F430232	Nut	
28	F140938	Snap Bushing	
29	70546902	Screw	
30	F8504301	Fan	

© Copyright, Alliance Laundry Systems LLC – DO NOT COPY or TRANSMIT

Accessory Box - Electric 380-480 Volt Models

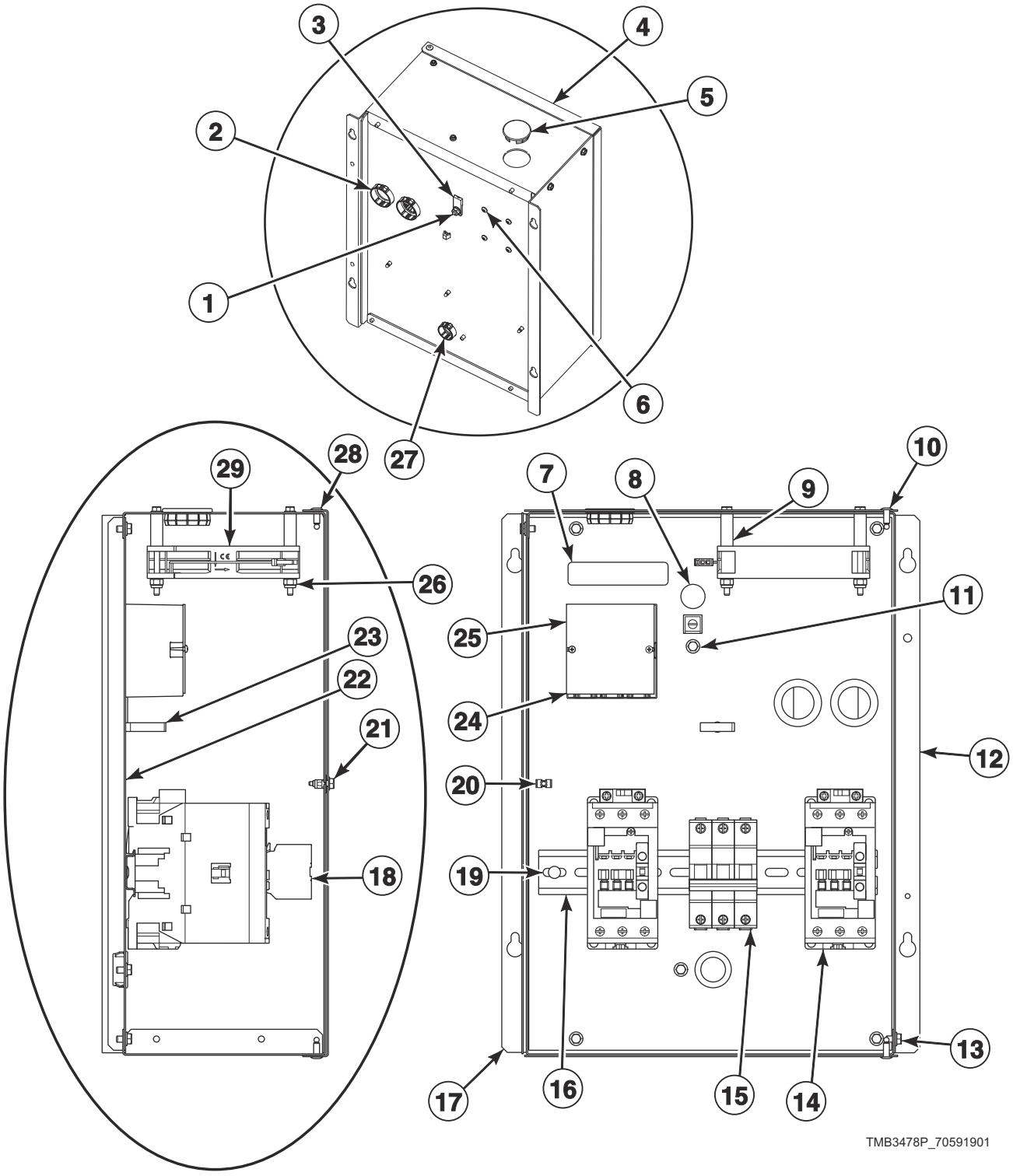

© Copyright, Alliance Laundry Systems LLC – DO NOT COPY or TRANSMIT

Accessory Box - Electric 380-480 Volt Models

REF	PART NO.	DESCRIPTION	COMMENTS
	44309004	Harness	CSA models; Power distribution block to control circuit breaker
	44309014	Harness	IEC models; Power distribution block to control circuit breaker
1	44088001	Nut	
2	M402542	Snap Bushing	2 required
3	M411283	Ground Lug Connector	
4	44134004	Contactor Box Cover	
5	70180001	Plug	
6	39733	Screw	
7	44286803	Label	
8	D516100	Label	
9	44328601	Sleeve	2 required
10	70058502	Pop Rivet	
11	685837	Screw	
12	44292501	Contactor Box Side	Top
13	51780	Screw	
14	70482801	Contactor	2 required
15	70488101	Circuit Breaker	
16	44229701	DIN Rail	
17	44292401	Contactor Box Side	Bottom
18	44313201	Auxiliary Contact Block	2 required
19	70058501	Pop Rivet	
20	70030501	Expansion Clip	
21	F8206901	Screw	
22	44292601	Contactor Box Base Plate	
23	F8449502	Wire Clip	
24	M413865	Power Distribution Block	
25	44014901P	Power Distribution Block Cover	
26	F430232	Nut	
27	F140938	Snap Bushing	
28	70546902	Screw	
29	F8504301	Fan	

© Copyright, Alliance Laundry Systems LLC – DO NOT COPY or TRANSMIT

Harnesses

PART NO.	DESCRIPTION	COMMENTS
44316007	Harness	1 Phase
44316008	Harness	3 Phase
44280007	Configuration Harness	120 Volt; Cylinder
44280006	Configuration Harness	120 Volt; Fan
44334308	Contactor Coil Harness	Electric models
44334303	Control Harness	Electric models; 1 Phase
44334304	Control Harness	Electric models; 3 Phase
44356404	Control Tray Harness Assembly	Electric models
44356408	Control Tray Harness Assembly	Steam models
44356403	Control Tray Harness Assembly	Gas models
44334702	Inverter Contactor Coil Harness	Secondary
44281705	Jumper Harness	
44316001	Harness	1 Phase
44316002	Harness	3 Phase
44280010	Motor Contactor Power Harness	1 Phase; EMI
44280012	Motor Contactor Power Harness	3 Phase; EMI
44280001	Motor Contactor Power Harness	1 Phase
44280003	Motor Contactor Power Harness	3 Phase
44280101	Power Harness	
44272101	Power Harness	

© Copyright, Alliance Laundry Systems LLC – DO NOT COPY or TRANSMIT

Labels

PART NO.	DESCRIPTION	COMMENTS
44324201	Caution Label	Australian models; Repeat Ignition Reset
44318601	Caution Label	Vent/install
F8614501	Danger Label	Shock; English/French
F8614301	Hot Surface Warning Label	English/French
F8609001	Hot Surface Warning Label	Icon
F8611601	Warning Label	
44318600	Label Kit	Vent/install
F8614500	Label Kit	Shock
F8611600	Warning Label Kit	
44321501	Notice Label	120/240 Volt
70539601	Notice Label	
70534201	Notice Label	
F8609501	Notice Label	
D516073	Notice Label	Read instructions; Icon
70538401	Pinch Warning Label	English/French
F8615701	Pinch Warning Label	Icon
70536401	Warning Label	Lint; Australian models
44324101	Warning Label	Fire; Australian models
44321601	Warning Label	Risk of fire; Icon
44324001	Warning Label	Shock/pinch

© Copyright, Alliance Laundry Systems LLC – DO NOT COPY or TRANSMIT

Notes

© Copyright, Alliance Laundry Systems LLC – DO NOT COPY or TRANSMIT

Parts Index

A

Adapter
44178801 77
Air Exhaust Deflector
44308401 73
44308402 73
Air Filter
44104201 83
Airflow Switch and Arm Bracket
70319602 75
Airflow Switch Arm
70319401 75
Airflow Switch Assembly
70429602 75
Airflow Switch Vane
70319202 75
App Pay Overlay Kit
44374701 ..... 21, 23
Auxiliary Contact Block
44313201 ..... 87, 89

B

Baffle
44299001P 53
44299801 53
44299802P 53
Ball Bearing
44041901P 67, 71
Bearing
F100136P 67
M413923P 71
Belt Guard
44298401 55
44314301 55
44332201 55
Belt Guard Side Panel
44298301 55
44301101 55
Blower Assembly
44267201 73
70302201P 73
Blower Housing Scroll
44303801 73
44303901 73
Blower Inlet Cone
44305201 73
70303101 73
Blower Motor Mounting Plate
44311301 73
70380801 73
Bolt
M400650 ..... 67, 71
Bottom Pan
44298701 53
Burner Assembly
M410541P 77
Burner Orifice
70684101 79
70684102 79
70684103 79
70684104 79
70684105 79
70684106 79
70684107 79
70684108 79
70684109 79
70684110 79
70684112 79
70684114 79
70684126 79
70684128 79
70684130 79
70684131 79
70684132 79
70684133 79
70684134 79
70684135 79
70684137 79
70684138 79
70684139 79
70684142 79
70684158 79
Burner Support
44110301 77
Bushing
70346501 85
Bypass Harness
44334103 ..... 39, 53

C

Cable Tie
70335601 85
Caution Label
44318601 91
44324201 91
Center Hinge Lug Assembly
70640401 63
Center Pan
44298601 53
Central Pay Board Harness
44355604 35
Central Pay Harness
44342801 21
44355602 35
44355605 35
Central Pay Kit
44359001 35
44359003 35
Circuit Breaker
70488101 89
70488102 87
70488105 87
Circuit Plug Housing, 1
44370401 69
Coil
F8514601P 83
F8514701 83

N/A items do not appear in index.

© Copyright, Alliance Laundry Systems LLC – DO NOT COPY or TRANSMIT

Coin Box
F160673P 53
Coin Chute Assembly
70296401 53
Coin Drop
38963P 31
70441601 31
70441603 31
Coin Drop Assembly
201141 31
210195 31
210196 31
38462P 31
38463 31
38467 31
38519 31
70281102 31
70283102 31
70441602 31
70447301 31
70471601 31
70482401 31
70506901 31
Coin Drop Kit
CK077 31
CK097 31
CK122 33
Coin Identification Paper
38464P 31
38475 31
38725 31
Coin Meter
F0160737-00 31
Coin Vault and Emergency Stop Mount Assembly
70529502 53
Coin Vault Assembly
70529501 53
Coin Vault Switch Harness
44334101 ..... 39, 53
Cold Weather Kit
44340301 17
Configuration Harness
44280006 90
44280007 90
Contact Base
F8538101 37
Contact Switch
F8069501 37
Contactor
70482601 85
70482801 ..... 87, 89
Contactor Box Base Plate
44292601 ..... 87, 89
Contactor Box Cover
44134004 ..... 87, 89
Contactor Box Side
44292401 ..... 87, 89
44292501 ..... 87, 89
Contactor Coil Harness
44334308 90
Control
70511601 17
Control Assembly
70478803P 21, 23
70478804 27
70478903 23
70478904 27
70479801 19
70479901 19
70523003 23
70523004P 27
70523101 19
70543104 29
Control Board Control Tray
70494901 85
Control Box Assembly
44180101 15
Control Box Base
44065301 17
Control Box Cover
44065201 17
Control Box Housing
44306701 17
Control Box Top
44307101 17
Control Door and Studs Assembly
70570201 29
Control Door Latch
431318 53
Control Harness
44334303 90
44334304 90
44334404 17
Control Panel
44000122* 41
44000125 41
44000130DG 41
44040005* 41
44040008B 41
44040011* 41
44040013 41
44040014 41
44040015LG 41
44367103 43
44367106W 43
44368001 43
44368002 43
44368003W 43
44368004W 43
Control Plate
70497101 ..... 19, 27
Control Plate and Studs Assembly
70496601 ..... 21, 23
Control Plate Assembly
70497201 ..... 21, 23
Control Tray
70492401 85
Control Tray Cover
70507501 55
Control Tray Harness Assembly
44356403 90
44356404 90
44356408 90
Control Trim
44016401 39
70529401 39
Conversion Kit
70559303 85
Cylinder and Trunnion Assembly
44195701P 65

N/A items do not appear in index.

© Copyright, Alliance Laundry Systems LLC – DO NOT COPY or TRANSMIT

44195702P 65
44195705P 65
44195706 65
Cylinder Assembly
44198301P 65
44198302 65
Cylinder Kit
44057201P 65
44057301P 65
Cylinder Rib
M403003 65
44076301 65
Cylinder Rib Assembly
44191202 65

D

Damper Assembly
44280301 73
44280302 73
Danger Label
F8614501 91
DIN Rail
M412690 85
44229701 ..... 87, 89
DIN Valve Adapter Kit
F8382301 83
Direct Air Kit
44355101P 77, 81
Door Assembly
44028906P 57
44028907P 57
44028908 57
44058105P 57
44058106P 57
44058107P 57
44058108 57
44266701P 57
44266702P 57
44292302B 57
44292302LGP 57
44354701 57
44354702P 57
44354703 57
44354704 57
44354705 57
44354706 57
44354707 57
44354708 57
Door Catch Kit
70482901 39
Door Glass
44008401P 59
44008402P 59
44008403 59
44008404 59
44008405 59
Door Glass Installation Tool
M4221P4 59
Door Glass Label
70650401 59
70707701 59
Door Handle
44007901 59
44263801 59
44370601 59
70521102 59
Door Hinge Assembly
44075203* 61
44075208B 61
44075208LG 61
44075211 61
44366602LG 63
44366604 63
44366608 63
Door Hinge Lug Assembly
44035001 61
44035002 61
Door HingecAssembly
44366606W 63
Door Latch
M401223 39
Door Ring and Handle Assembly
44326007B 59
44326007LG 59
Door Ring Assembly
44326001 59
44326002 59
44326004B 59
44326005 59
44326006 59
Door Ring Gasket
44008201P 59
70296802 59
Door Seal Kit
70211902P 59
Door Switch Actuator Kit
70215001P 61
Door Switch Harness
44335202 39
Drive Motor
44259501P 71
44259601P 71
44259701P 71
44259801P 71
Drive Rivet
M400713 17

E

Elbow
70079601 77
Electric Stove Assembly
44242101 81
44252501 81
Electric Wrap
44327301 81
44327302 81
Electronic Coin Drop Assembly
70294107 31
70513302 31
70513303 31
70513304 31
70513306 31
70513309 31
70513310 31
70513311 31
70513312 31
70513313 31

N/A items do not appear in index.

© Copyright, Alliance Laundry Systems LLC – DO NOT COPY or TRANSMIT

70513314 31
70513315 31
70513316 31
70513318 31
Electronic Coin Drop Kit
CK099 33
CK100 33
CK101 33
CK109 33
CK110 33
CK113 33
CK115 33
CK116 33
CK117 33
CK118 33
CK119 33
CK120 33
CK121 33
CK125 33
Emergency Stop Button Kit
70580301 37
Emergency Stop Bypass Harness
F8519403 37
Emergency Stop Harness
44272401 37
Emergency Stop Interconnect Harness
44272106 37
Emergency Stop Label
44012901 37
44012903 37
Emergency Stop Mounting Bracket
70550401 37
Emergency Stop Pushbutton
F200233500 37
EMI Filter
F8591601 85
F8591801 85
F8637501 85
EMI Filter Kit
44357401 85
44357402 85
44357403 85
End Stop
F8449801 ..... 85, 87
Ethernet Gateway Kit
NK320 35
Exhaust Pipe Assembly
44327901 73
Expansion Clip
70030501 ..... 21, 23, 35, 39, 85, 87, 89
Extension Spring
F8440701 71

F

Fan
F8504301 ..... 87, 89
Fan Motor
44259301P 73
44259401P 73
70478701P 73
70484901P 73
Fan Spacer
70599301 73
FCC-IC Label
F8613201 35
Felt Pad
M402144 65
Fill Hose
202799 17
202800 17
Filter
44172001 83
Filter Bracket
70533101 85
Filter Mounting Plate
70551701 17
Fob Communication Harness
F8719301 23
Fob Reader Control Assembly
205135 23
Fob Reader Kit
70666806 35
Front Panel
44052517LG 45
44052520DG 45
44052520W 45
44052522 45
44052525* 45
44052526DG 45
44052527 45
44052529 45
44052530DG 45
44052530LG 45
44052530W 45
44367401W 47
44367403 47
44367405W 47
44367406 47
44367407W 47
44367408LG 47
44367409 47
Front Panel Assembly
44077905WP 45
44077919 45
F43113173

G

Gas Stove Assembly
44135605 77
Gas Valve
44154501P 77
44154502P 77
44154505 77
44154506 77
44178301P 77
44178302P 77
44298501 77
44298504 77
Gas Valve Bracket
44175703 77
Gas Valve Harness
44273501 77
44273502 77
Gasket
70289101P 49

N/A items do not appear in index.

© Copyright, Alliance Laundry Systems LLC – DO NOT COPY or TRANSMIT

Ground Lug Connector
M411283 ..... 85, 87, 89
Guard Panel
44269201 55
44269202 55
44332301 55

H

Handle and Caps Assembly
70154405P 49
70154415 49
Handle Bumper
70407210 49
Harness
F8617901 29
44281701 87
44281703 87
44281706 ..... 81, 87
44281707 87
44309003 87
44309004 89
44309013 87
44309014 89
44316002 90
44316007 90
44316008 90
Harness Adapter Plate
70523301 17
Harness Mounting Plate
70307007 ..... 15, 35
Harness Strap
55881 69
Heat Exchanger
70500401 ..... 77, 81
Heater Element
M410939P 81
M410940P 81
M410941P 81
M412955P 81
44232801 81
44232802 81
44232803 81
44258701 81
44263201P 81
Heating Element Screen
44308802 81
High Altitude Orifice Kit
44357503 79
44357504 79
44357505 79
44357506 79
High Voltage Suppression Cable
44239705 77
Hinge Cam Kit
M4772P3 61
M4773P3 61
Hold-Down Clip
35865 51
Hose
44073304 17
Hose Clamp
36801 17
Hose Fitting
44069101 17
Hot Surface Warning Label
F8609001 91
F8614301 91
Housing and Trunnion Assembly
M4644P3 67
44336302 67

I

Idler Shaft
44303102 71
Idler Spacer
44306801 71
Igniter Cover
70159601 77
Ignition Control
70482001 85
70482002P 85
Insulation
44150102 53
44150105 ..... 41, 53
Insulator
M413862 85
Interconnect Harness
44334401 17
Inverter Contactor Coil Harness
44334702 90
Inverter Motor Harness
44335304 71
44335305 73
I/O Control Assembly
70671701 85

J

Jumper Harness
44281705 90
44281708 81
44281709 81
Jumper Strip
M400869 81

K

Key
M400008 ..... 65, 71
44309301 71
70155601 ..... 17, 39
70155602 39
Kickplate
70117607 49
70117619 49

L

Label
D503887 77
D516100 ..... 85, 87, 89

N/A items do not appear in index.

© Copyright, Alliance Laundry Systems LLC – DO NOT COPY or TRANSMIT

44190901 45
44286801 85
44286803 ..... 85, 87, 89
44318201 17
70537001 ..... 45, 47

Label Kit
F8614500 91
44318200 17
44318600 91
44324500 17
70534400 45

Lanyard Cable
F8521303 43

Latch Mounting Bracket
44003201 53

Light
801432 17

Limit Offset Bracket
44226101 81

Limit Thermostat
44328003 73
44328006 81
44328008 77
70530905 73

Lint Bracket
44325301 51

Lint Clip Bracket
44140202 51

Lint Panel
44293602 49
44293603LG 49
44293603W 49
44293604DG 49
44293604W 49
44293605 49
44298101 51
44298102 51
44298201 51
44300901 51

Lint Screen
44063601 51

Lint Screen Clip
H96418413 51

Lint Screen Top Rail
44298901 51

Lock, Key and Nut Kit
70722301 39
70733701 ..... 17, 39

Low Pressure Steam Cover
M400828 83

Lower Hinge Gusset
70632002 63

Lower Lug Assembly
70639302 63

Lower Rear Panel
44297101 53
44300001 53

Lug Mount Bracket
70634301 47

L.P. Conversion Kit
44328802 77
44328803 77
44330302 77

M

Machine ID Control Assembly
203361P 21, 23, 27, 29

Magnet
70343101 49

Magnet Bracket
44290501 49

Main Harness
44316001 90
44334201 15

Male Tab Terminal
00621SG 85

Max Fill Line Label
70707501 59

Micro V Pulley
44270201 71

Mixing Valve
70519801 17

Mixing Valve Shield Bracket
44306601 17

Moisture Sensing Harness Kit
44344702 69

Moisture Sensor Harness
44333902 69

Motor Conduit Bracket
44317901 ..... 71, 73

Motor Contactor Power Harness
44280001 90
44280003 90
44280010 90
44280012 90

Motor Pivot Bracket Weldment
44327001 71

Motor Pivot Gusset Bracket
44325701 71

Motor Pivot Plate Weldment
44311501 71

Motor Pivot Support Bracket
44325801 71

Motor Pulley
44267601 71
70559102 71

Mount Bracket
44308701 17

Mounting Plate
70208801 ..... 21, 23

N

Nameplate
F8443106 41
F8688001 41
F8688901 ..... 41, 43
44010601 41
567887 41
70541801 41

Nameplate Bezel
70117401 41

Nipple
F421921 77

N/A items do not appear in index.

© Copyright, Alliance Laundry Systems LLC – DO NOT COPY or TRANSMIT

Notice Label
D516073 91
F8609501 91
44321501 91
70534201 91
70539501 77
70539601 91
Notice label
70544901 77
Nut
F430232 ..... 87, 89
M400022 73
M400026 ..... 67, 71
M400033 ..... 69, 71
M400977 ..... 39, 41
M404993 65
M414215 59
21899 53
23951 49
36020 83
44071201 29
44088001 ..... 59, 61, 63, 85, 87, 89
44333202 71
51236 49
70030401 47
70054 ..... 23, 81

O

Opto Coupler
200674P 31
Overlay
F8205101 ..... 21, 23
F8696101 ..... 21, 23
F8696201 23
F8696301 ..... 21, 23
F8733901 23
F8734201 23
F8736501 23
70295101 23
70512004 25
70512005 25
70512006 25
70512007 25
70512008 25
70516801 19
70516802 19
70517001 25
70517002 25
70517003 25
70517004 25
70517005 25
70517801 19
70517802 19
70518101 23
70518102 23
70518201 25
70518202 25
70518203 25
70519001 19
70519002 19
70539101 19
70539102 19
70541201 25
70541202 25
70541203 25
70544701 21
70544702 21
70544703 21
70545501 19
70545502 19
70548801 27
70548802 27
70556201 23
70556301 23
70556401 23
70556402 23
70556501 ..... 21, 23
70556502 ..... 21, 23
70556601 23
70556701 23
70556801 23
70556901 23
70557001 ..... 21, 23
70557002 ..... 21, 23
70559001 25
70570301 21
70570302 21
70570303 21
70570601 27
70570602 27
70570801 27
70570802 27
70571001 25
70571002 25
70571003 25
70571101 25
70571102 25
70571103 25
70571401 27
70571402 27
70571601 27
70571602 27
70595401 29
70626301 25
70626302 25
70626303 25
70636101 21
70636102 21
70636103 21
70636201 25
70636202 25
70636203 25
70636204 25
70636205 25
70636302 25
70636303 25
70636401 27
70636402 27
70636501 19
70636502 19
70637601 25
70637602 25
70637603 25
70637604 25
70637605 25
70638201 21
70638202 21
70638203 21
70638301 27
70638302 27
70638701 19
70638702 19
70638801 19
70638802 19
70638901 27

N/A items do not appear in index.

© Copyright, Alliance Laundry Systems LLC – DO NOT COPY or TRANSMIT

70638902 27
70639001 29
70645601 23
70645701 23
70645801 23
70645901 23
70646001 ..... 21, 23
70646002 ..... 21, 23
70646101 23
70646102 23

P

Panel Locator
56079 39
Panel Lock
44089304 39
44089305 39
Pinch Warning Label
F8615701 91
70538401 91
Pipe Bracket
44327601 55
Pipe Nipple
431486 77
70210201 77
70612601 77
70612602 77
70612603 77
Pipe Plug
70346802 77
Pipe Tee
44231902 77
Plug
70167601 77
70180001 ..... 17, 87, 89
Pop Rivet
M400003 ..... 39, 53, 85
70058501 ..... 47, 49, 53, 61, 63, 85, 87, 89
70058502 ..... 87, 89
70126301 49
70126401 49
Porcelain Touch-Up Paint
122P4P 53
370P4P 53
Power Distribution Block
M413865 ..... 87, 89
Power Distribution Block Cover
44014901P 87, 89
Power Harness
44272101 90
44280101 90
Power Sensor Harness
44334402 17
Pressure Fitting
44231601 77
Pulley
44289502 71
Pushbutton Switch
70413301 ..... 19, 21, 23, 27, 39
Push-to-Start Switch
801434W 17

R

Rear Access Plate
44135201 77
Reducer
M413453 77
Reed Switch Assembly
F8066804 49
Rib Rod
M404992 65
RIb Wire
44208601 69
Rivet
70743501 49
Roller Bracket Assembly
70404001 49
Roller Catch Arm
70030301 49
Roller Catch Spacer
70030201 49
Roller Catch Wheel
70297601 49

S

Screw
F8206901 ..... 35, 85, 87, 89
M400063 67
M400661 59
M402797 77
M411072 ..... 21, 23, 39
23008 83
33562 ..... 29, 81
39733 ..... 87, 89
430497 ..... 15, 17, 53, 75, 81
430757 ..... 49, 75
431287 53
44338901 69
44349101 ..... 61, 63
51780 ..... 17, 35, 53, 87, 89
51782 77
51783 85
685837 ..... 85, 87, 89
70033502 ..... 39, 61
70072801 49
70132301 49
70182601 ..... 39, 47
70187201 ..... 67, 71
70240301 ..... 77, 81
70247701 53
70275801 39
70409801 61
70442101 ..... 59, 61, 69
70546902 ..... 87, 89
70640201 63
70640301 63
802822 63
804608 ..... 17, 19, 21, 23, 27, 29
805213 71
Sensor Harness
44334406 17
Shaft Collar
70467001 71

N/A items do not appear in index.

© Copyright, Alliance Laundry Systems LLC – DO NOT COPY or TRANSMIT

Shaft Wire
44208702 ... 69
Shield
44326801 ... 17
Shock Warning Label
F8614201 ... 17
F8614401 ... 17
Side Panel
44299401* ... 53
44299501DG ... 53
44299501*P ... 53
44367701LG ... 53
44367702DG ... 53
44367702LG ... 53
44367702W ... 53
44367801LG ... 53
44367801W ... 53
44367802LG ... 53
Sleeve
44328601 ... 87, 89
Slip Ring Assembly
44222702 ... 69
Slip Ring Holder
44224401 ... 69
Slot Card Plate Assembly
44089501 ... 21, 23
Snap Bushing
F140938 ... 87, 89
M402542 ... 87, 89
70178701 ... 85
Spacer
M401402 ... 65
Spark Electrode
44328701P ... 77
Spray Paint
298P4P ... 53
Spud Holder Weldment
44263102 ... 77
Steam Adapter Kit
44314701 ... 83
Steam Coil
M400637P ... 83
Steam Control Assembly
70501801 ... 85
Steam Heater Assembly
44020401P ... 83
44020402 ... 83
Steam Stand Box
44007501 ... 83
Steam Valve
F8322904P ... 83
Steam Valve Harness
F8520703 ... 83
Stove Grate
44300301 ... 55
44300302 ... 55
44335601 ... 55
Stove Limit Bypass Harness
70564302 ... 83
Stove Limit Harness
70564304 ... 77, 81
Strain Relief
44304801 ... 83
Street Elbow
70612501 ... 77
Switch
70411901 ... 75
Switch Bracket
44296101 ... 49
70356301 ... 75, 77
Switch Hole Plug
44057801B ... 39
44057801LG ... 39
44057801Q ... 39
44057801W ... 39

T

Terminal
00622SG ... 85
Terminal Block
430642 ... 85
Terminal Block Shield
70333001 ... 85
Thermistor
M414704 ... 73
44064701 ... 53
Thermistor Plate
44068101 ... 53
44068102 ... 53
Thimble Assembly
44305002 ... 73
Top Cover
44139301 ... 53
Top Cover Pan
44129301P ... 53
Top Pan
44300101 ... 53
Top Panel Bracket
44368201 ... 53
Transformer
F8491101 ... 85
202757 ... 35, 53
202758 ... 35, 53
Transformer Harness
44272301 ... 35, 53
44272302 ... 35, 53
Trunnion and Bearing Assembly
M4640P3 ... 67
44336301 ... 67
Trunnion Assembly
44207901P ... 65
44208001 ... 65
44375001P ... 67, 71
Trunnion Housing
M413826P ... 71
Tumbler Dolly Kit
M4379P4 ... 39

U

Upper Hinge Gusset
70632001 ... 63
Upper Lug Assembly
70639301 ... 63

N/A items do not appear in index.

© Copyright, Alliance Laundry Systems LLC – DO NOT COPY or TRANSMIT

Upper Rear Panel
44297001 53
USB Bracket
70547001 29
USB Gateway Kit
NK330 35
USB IR Interface Kit
203346 35
USB-Serial Interface Assembly
203440 29

V

Valve
F8322906P 83
Valve Rebuild Kit
F8379502 83
V-Belt
44309402 71
44333301 71
Vend Activation Harness
44334004 ..... 19, 21, 23, 27

W

Warning Label
F8611601 91
44321601 91
44324001 91
44324101 91
44324501 17
44324502 17
70534401 ..... 45, 47
70534402 ..... 45, 47
70534405 ..... 45, 47
70536401 91
Warning Label Kit
F8611600 91
Washer73
F431131 73
M400015 ..... 65, 67
20103 ..... 67, 71
44238902 69
70261401 ..... 67, 71
Water Valve Harness
44334405 17
Wire Clip
F8449501 85
F8449502 ..... 85, 87, 89
Wire Guard
201595P 31
Wire Label
44286802 85
44286804 85
Wireless Control Label
204692 35
Wireless Network Board Harness
F8536002 35
Wireless Network Control Assembly
203532 35
807211 35
Wireless Network Harness
F8674006 35
Wireless Network Kit
70596301 35
70609701 35
Wireway Channel
44239101 69

N/A items do not appear in index.

© Copyright, Alliance Laundry Systems LLC – DO NOT COPY or TRANSMIT