Tumble Dryer

120 Pound Capacity

18 Digit Model Numbers with 3 and 5 in 13th Position

Refer to Page 3 for Model Numbers

Parts

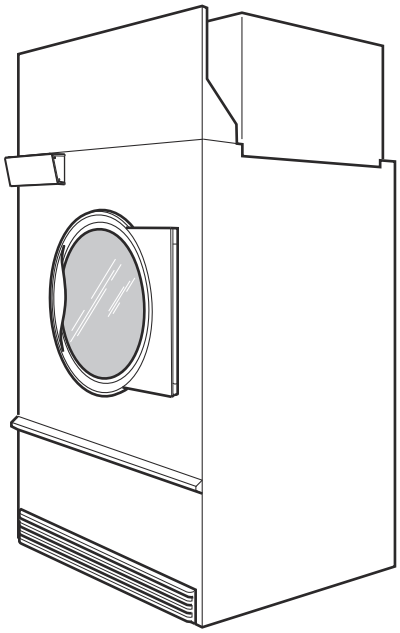

TMB1282C_70592001

Alliance™ Laundry Systems

www.alliancelaundry.com

Part No. 70592001R13
September 2025

Table of Contents

Title	Page
Parts Ordering Information	2
Serial Plate Location	2
Machine Identification	3
Product Overview - Heat Source and Voltage	4
Product Overview - FN Control Suffix	6
Product Overview - DN and NN Control Suffixes	8
Interior Control Box	10
Dual Digital Control - F in the 7th Position (Drawing 1 of 2)	12
Dual Digital Control - F in the 7th Position (Drawing 2 of 2)	14
Electronic Display Control - N in the 7th Position (Drawing 1 of 2)	16
Electronic Display Control - N in the 7th Position (Drawing 2 of 2)	18
3.5 Inch Graphical Control - D in the 7th Position	20
Fire Suppression System Control Box	22
Front Panel Components	24
Access Panel and Nameplates	26
Door Components	28
Hinge Components - Design 3 Models	30
Hinge Components - Design 5 Models	32
Lint Panel Components	34
Cabinet and Frame Assembly	36
Rear Panel Components	38
Cylinder and Trunnion Assembly	40
Trunnion Bearings	42
Moisture Sensing Components	44
Cylinder Motor Components	46
Blower and Exhaust Components	48
Airflow Switch	50
Gas Heater Components	52
Burner Orifices	54
Steam Heater Components	56
Steam Valve	58
Electric Heater Components	60
Control Tray	62
Accessory Box - Electric 200-240 Volt Models	64
Accessory Box - Electric 380-480 Volt Models	66
Labels	68
Harnesses	69
Parts Index	71

© Copyright 2025, Alliance Laundry Systems LLC

All rights reserved. No part of the contents of this book may be reproduced or transmitted in any form or by any means without the expressed written consent of the publisher.

Parts Ordering Information

If literature or replacement parts are required, contact the source from whom the machine was purchased or contact Alliance Laundry Systems at (920) 748-3950 for the name and address of the nearest authorized parts distributor.

For technical assistance, call the number listed below:

(920) 748-3121 Ripon, Wisconsin

Serial Plate Location

When calling or writing about your product, be sure to mention model and serial numbers. Model and serial numbers are located on serial plate(s) as shown.

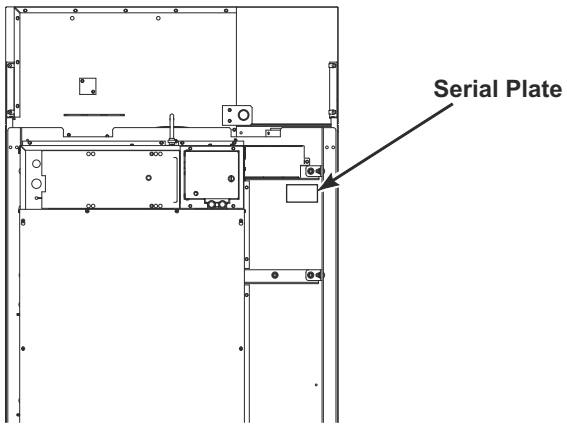

TMB3615P_70592001

© Copyright, Alliance Laundry Systems LLC – DO NOT COPY or TRANSMIT

Machine Identification

Information in this manual is applicable to these machines:

BA120E
BA120L
BA120N
BA120S
BG120E
BG120L
BG120N
BG120S
BH120E
BH120L
BH120N
BH120S
BJ120E
BJ120L
BJ120N
BJ120S
BK120E
BK120L
BK120N
BR120E
BR120S
BU120E
BU120L
BU120N
BU120S
GA120E
GA120L
GA120N
GA120S
GG120E
GG120L
GG120N
GG120S
GH120E
GH120L
GH120N
GH120S
GJ120E
GJ120L
GJ120N
GJ120S
GK120E
GK120L
GK120N
GU120E
GU120L
GU120N
GU120S

HA120E
HA120L
HA120N
HA120S
HG120E
HG120L
HG120N
HG120S
HH120E
HH120L
HH120N
HH120S
HJ120E
HJ120L
HJ120N
HJ120S
HK120E
HK120L
HK120N
HR120E
HR120S
HT120C
HT120E
HT120L
HT120N
HT120S
HU120E
HU120L
HU120N
HU120S
KT120E
KT120L
KT120N
KT120S

NA120E
NA120L
NA120N
NA120S
NG120E
NG120L
NG120N
NG120S
NH120E
NH120L
NH120N
NH120S
NJ120E
NJ120L
NJ120N
NJ120S
NK120E
NK120L
NK120N
NR120E
NR120S
NT120E
NT120L
NT120N
NT120S
NU120E
NU120L
NU120N
NU120S

PA120E
PA120L
PA120N
PA120S
PG120E
PG120L
PG120N
PG120S
PH120E
PH120L
PH120N
PH120S
PJ120E
PJ120L
PJ120N
PJ120S
PK120E
PK120L
PK120N
PR120E
PR120S
PT120C
PT120E
PT120L
PT120N
PT120S
PU120E
PU120L
PU120N
PU120S

SA120E
SA120L
SA120N
SA120S
SG120E
SG120L
SG120N
SG120S
SH120E
SH120L
SH120N
SH120S
SJ120E
SJ120L
SJ120N
SJ120S
SK120E
SK120L
SK120N
SR120E
SR120S
ST120C
ST120E
ST120L
ST120N
ST120S
SU120E
SU120L
SU120N
SU120S

UA120E
UA120L
UA120N
UA120S
UG120E
UG120L
UG120N
UG120S
UH120E
UH120L
UH120N
UH120S
UJ120E
UJ120L
UJ120N
UJ120S
UK120E
UK120L
UK120N
UR120E
UR120S
UT120C
UT120E
UT120L
UT120N
UT120S
UU120E
UU120L
UU120N
UU120S

© Copyright, Alliance Laundry Systems LLC – DO NOT COPY or TRANSMIT

Product Overview - Heat Source and Voltage

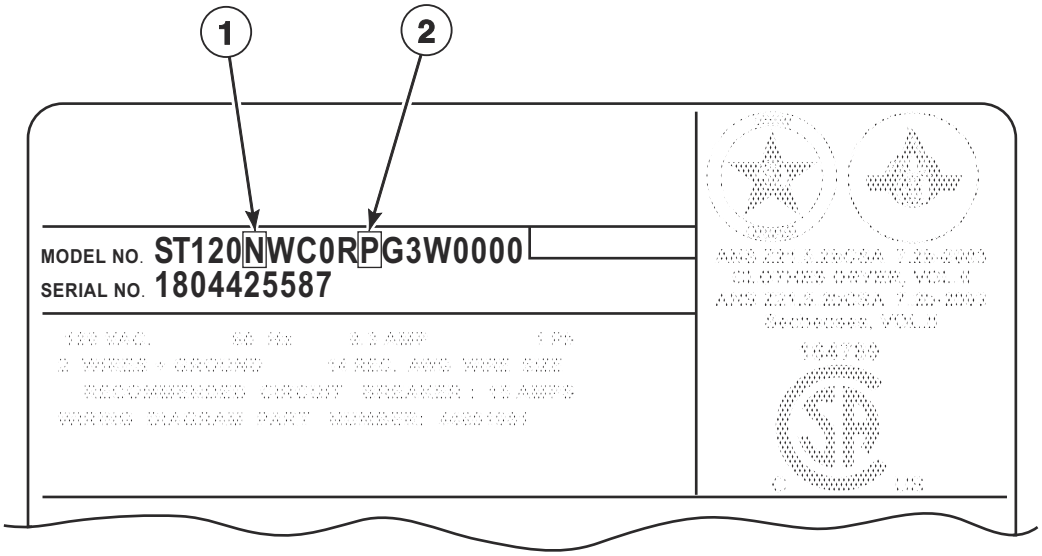

TMB3616P_70592001

© Copyright, Alliance Laundry Systems LLC – DO NOT COPY or TRANSMIT

Product Overview - Heat Source and Voltage

REF	PART NO.	DESCRIPTION	COMMENTS
1	-	Heat Source	C: Steam (CRN) E: Electric L: Liquid Petroleum Gas (L.P.) N: Natural Gas (N.G.) S: Steam
2	-	Voltage	G: 230-240 Volt/50-60 Hertz/3 Phase; Electric models H: 380 Volt/50-60 Hertz/3 Phase; Electric models J: 400-415 Volt/50-60 Hertz/3 Phase; Electric models L: 460-480 Volt/50-60 Hertz/3 Phase; Electric models N: 440-480 Volt/50-60 Hertz/3 Phase; Gas and steam models P: 380-415 Volt/50-60 Hertz/3 Phase; Gas and steam models Q: 200-240 Volt/50-60 Hertz/3Phase; Gas and steam models

© Copyright, Alliance Laundry Systems LLC – DO NOT COPY or TRANSMIT

Product Overview - FN Control Suffix

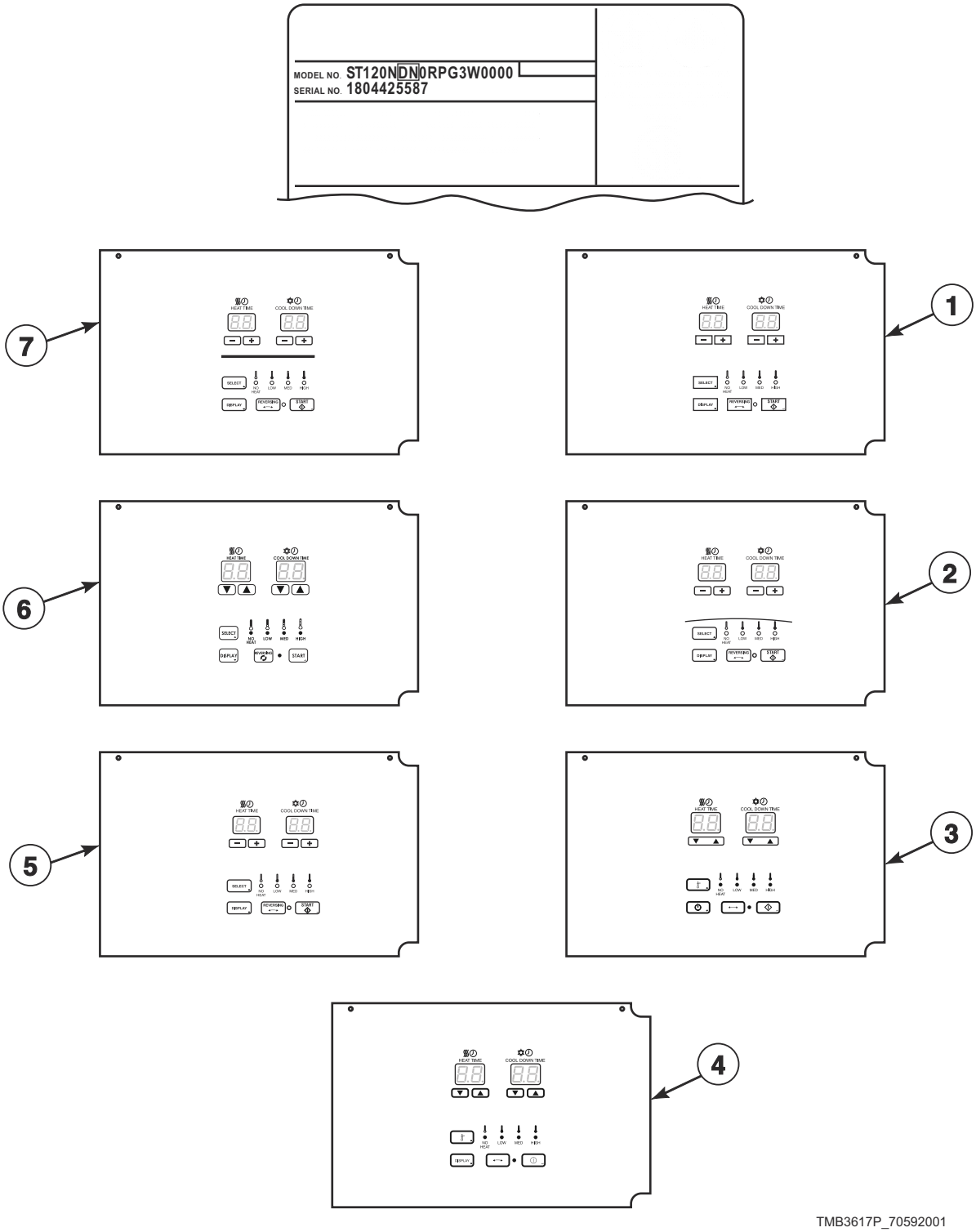

TMB3617P_70592001

© Copyright, Alliance Laundry Systems LLC – DO NOT COPY or TRANSMIT

Product Overview - FN Control Suffix

REF	PART NO.	DESCRIPTION	COMMENTS
1	-	Dual Digital Control	H models
2	-	Dual Digital Control	U models
3	-	Dual Digital Control	B models
4	-	Dual Digital Control	P models
5	-	Dual Digital Control	N models
6	-	Dual Digital Control	G and K models
7	-	Dual Digital Control	S models

© Copyright, Alliance Laundry Systems LLC – DO NOT COPY or TRANSMIT

Product Overview - DN and NN Control Suffixes

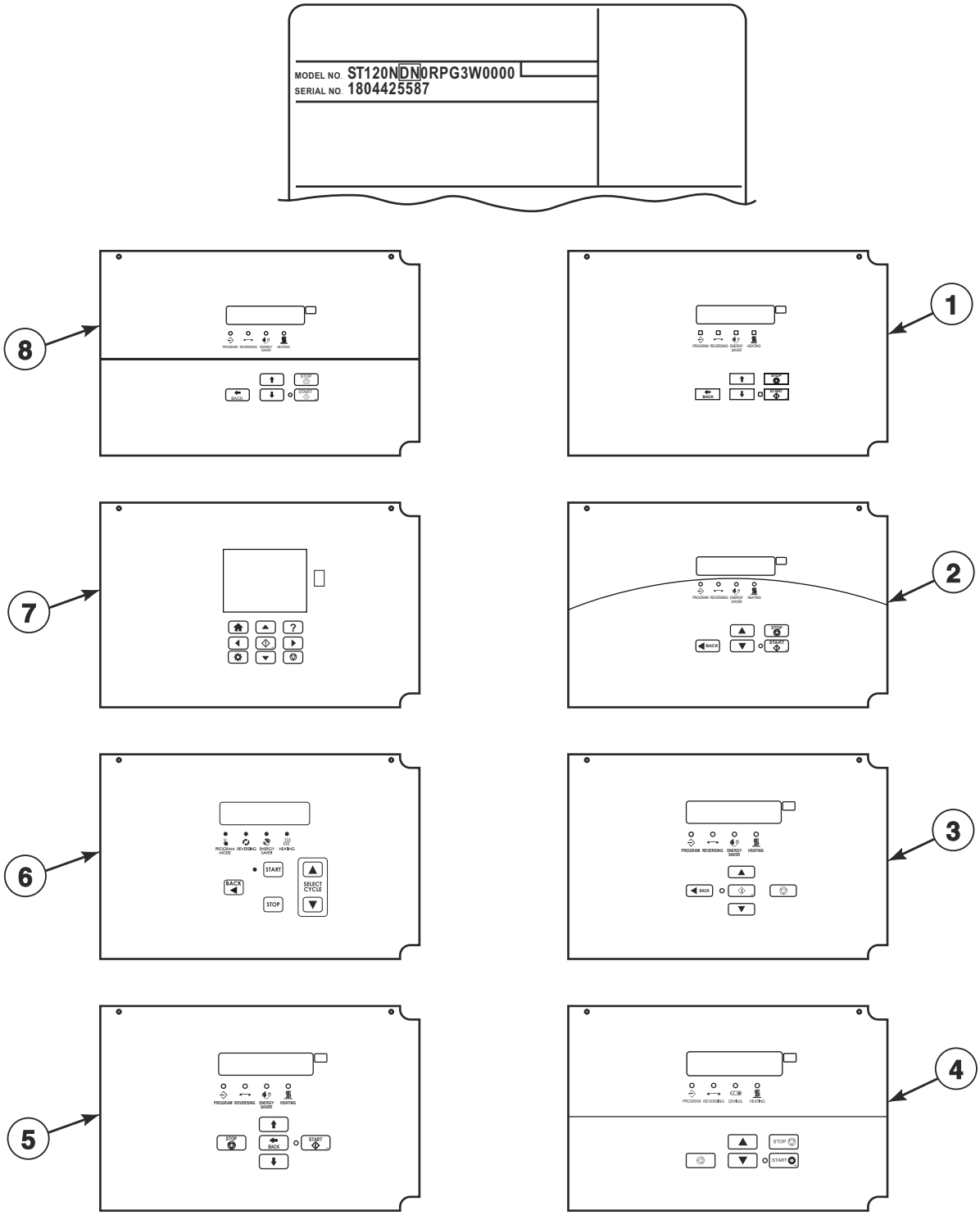

TMB3618P_70592001

© Copyright, Alliance Laundry Systems LLC – DO NOT COPY or TRANSMIT

Product Overview - DN and NN Control Suffixes

REF	PART NO.	DESCRIPTION	COMMENTS
1	-	Galaxy Control	H models
2	-	M-Series Control	U models
3	-	OPTimum Control	B models
4	-	OPL Micro Control	P models
5	-	OPL Micro Control	N models
6	-	OPL Micro Control	G and K models
7	-	UniLinc Control	U models
8	-	Quantum Gold Control	S models

© Copyright, Alliance Laundry Systems LLC – DO NOT COPY or TRANSMIT

Interior Control Box

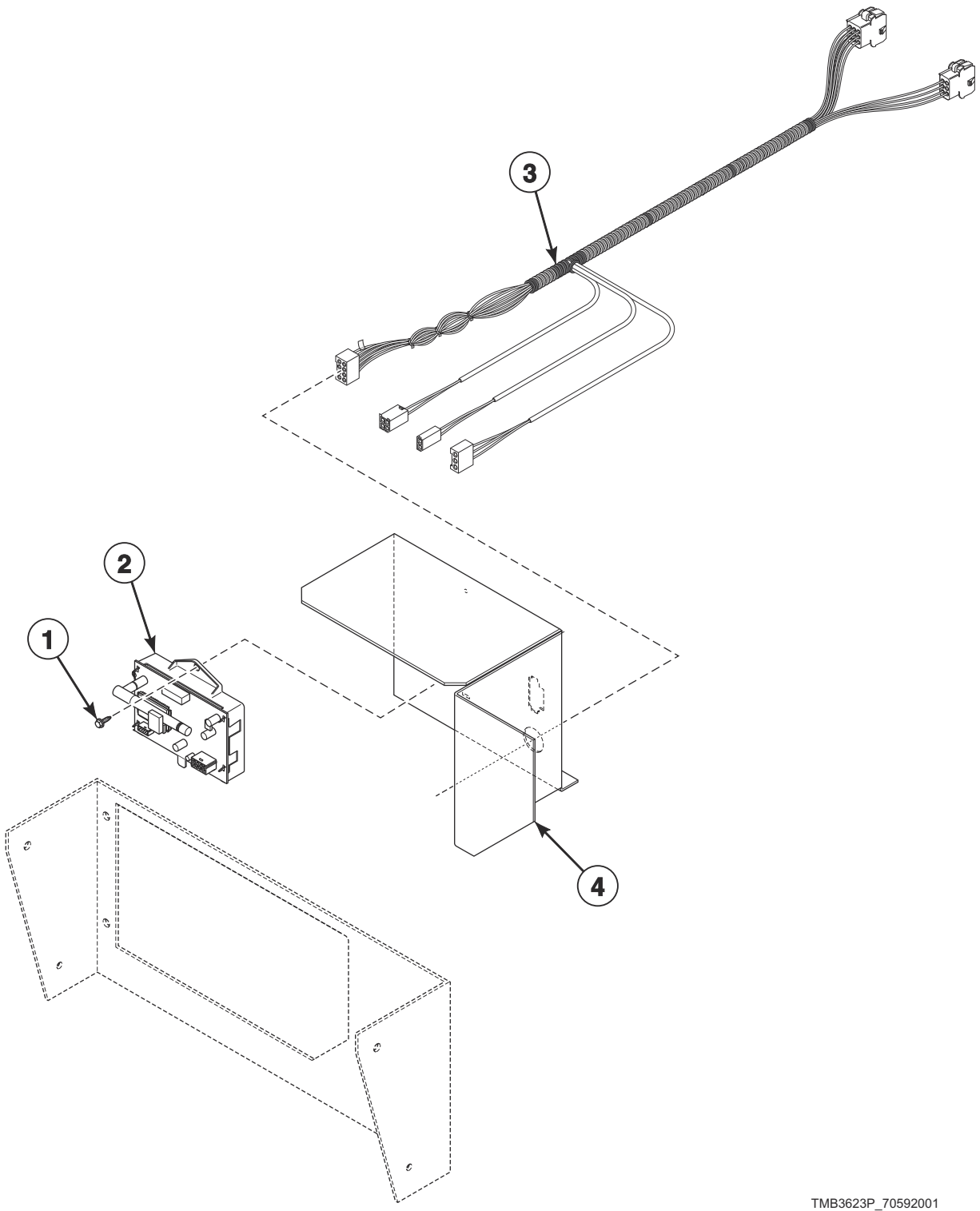

TMB3623P_70592001

© Copyright, Alliance Laundry Systems LLC – DO NOT COPY or TRANSMIT

Interior Control Box

REF	PART NO.	DESCRIPTION	COMMENTS
	70596301	Wireless Network Kit	D in the 7th position of the model number
1	430497	Screw	
2	203532	Wireless Network Control Assembly	
3	44334202	Main Harness	
4	44311101	Front Control Box	

© Copyright, Alliance Laundry Systems LLC – DO NOT COPY or TRANSMIT

Dual Digital Control - F in the 7th Position (Drawing 1 of 2)

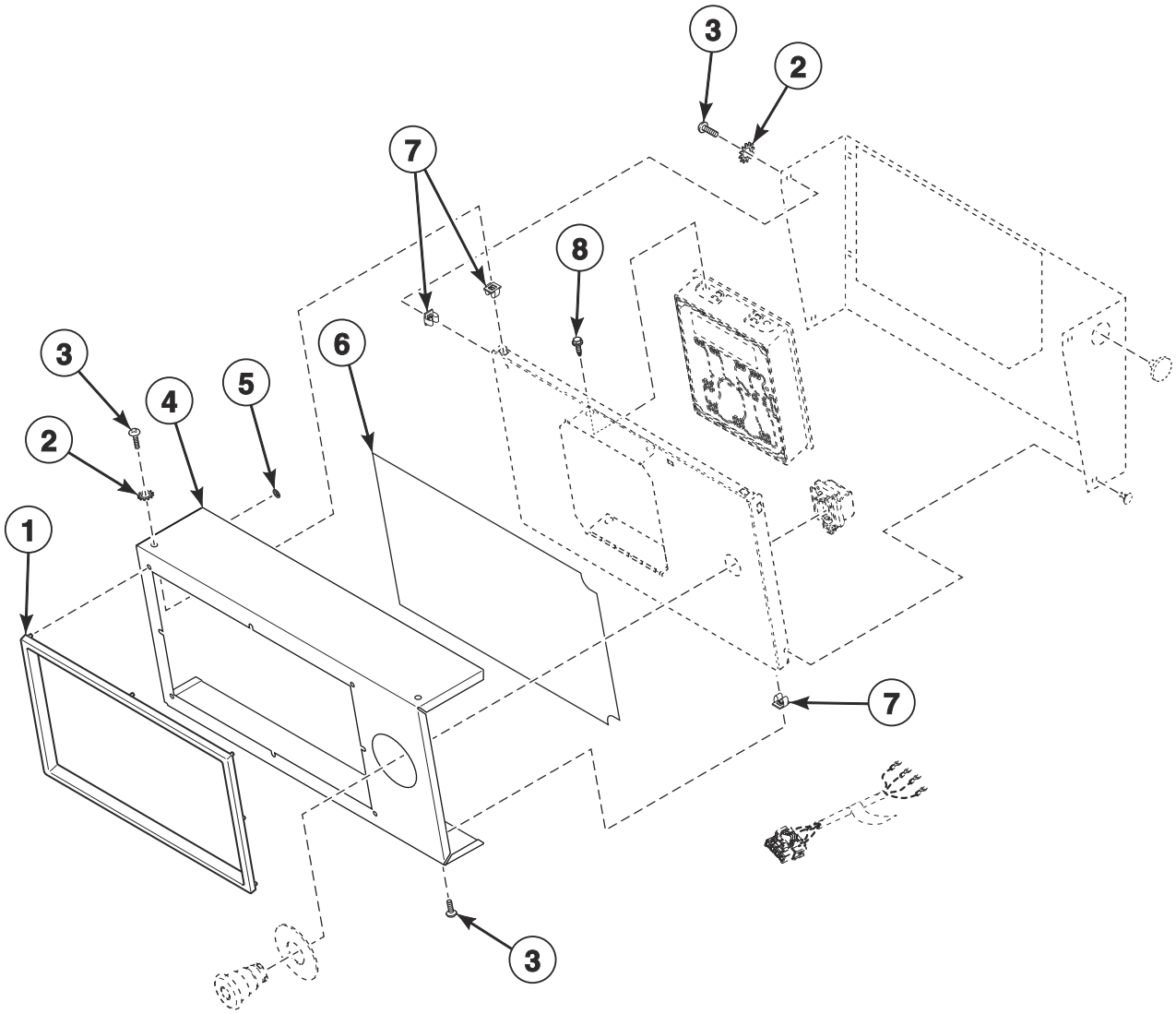

TMB3619P_70592001

© Copyright, Alliance Laundry Systems LLC – DO NOT COPY or TRANSMIT

Dual Digital Control - F in the 7th Position (Drawing 1 of 2)

REF	PART NO.	DESCRIPTION	COMMENTS
1	44016403	Control Trim	H models; Gray
	44016401	Control Trim	P and S models; Black
2	03815	Washer	
3	800930	Screw	
4	44330802	Control Cover	IEC B, P and U models; CSA B, P and U models through 12/31/18; Stainless steel; No trim
	44330805	Control Cover	IEC H, P and S models; CSA H, P and S models through 12/31/18; Stainless steel
	44330801*	Control Cover	IEC B and U models; CSA B and U models through 12/31/18
	44330806DG	Control Cover	IEC P models; CSA P models through 12/31/18; Dark gray
	44330804*	Control Cover	IEC H, N, P and S models; CSA H, N, P and S models through 12/31/18
	44330801B	Control Cover	IEC G and K models; CSA G and K models through 12/31/18; Black
	44330803LG	Control Cover	IEC U models; CSA U models through 12/31/18; Light gray
	44330811	Control Cover	CSA B, P and U models starting 1/1/19; Stainless steel; No trim; Design 3
	44330814	Control Cover	CSA H, P and S models starting 1/1/19; Stainless steel
	44330810*	Control Cover	CSA B and U models starting 1/1/19
	44330815DG	Control Cover	CSA P models starting 1/1/19; Dark gray
	44330813*	Control Cover	CSA H, N, P and S models starting 1/1/19
	44330810B	Control Cover	CSA G and K models starting 1/1/19; Black
	44330812LG	Control Cover	CSA U models starting 1/1/19; Light gray
5	M400977	Nut	8 required
6	70539101	Overlay	B models; Reversing
	70547501	Overlay	G and K models; Reversing
	70517801	Overlay	H models; Reversing; Design 3
	70636501	Overlay	H models; Reversing; Design 5
	70545501	Overlay	P models; Reversing
	70516801	Overlay	N models; Design 3 S models; Reversing
	70636801	Overlay	S models; Reversing; Design 5
	70519001	Overlay	U models; Reversing; Design 3
	70638801	Overlay	U models; Reversing; Design 5
7	70030501	Expansion Clip	
8	804608	Screw	4 required

*** Add Letter To Designate Color. Q - Bisque W - White**

© Copyright, Alliance Laundry Systems LLC – DO NOT COPY or TRANSMIT

Dual Digital Control - F in the 7th Position (Drawing 2 of 2)

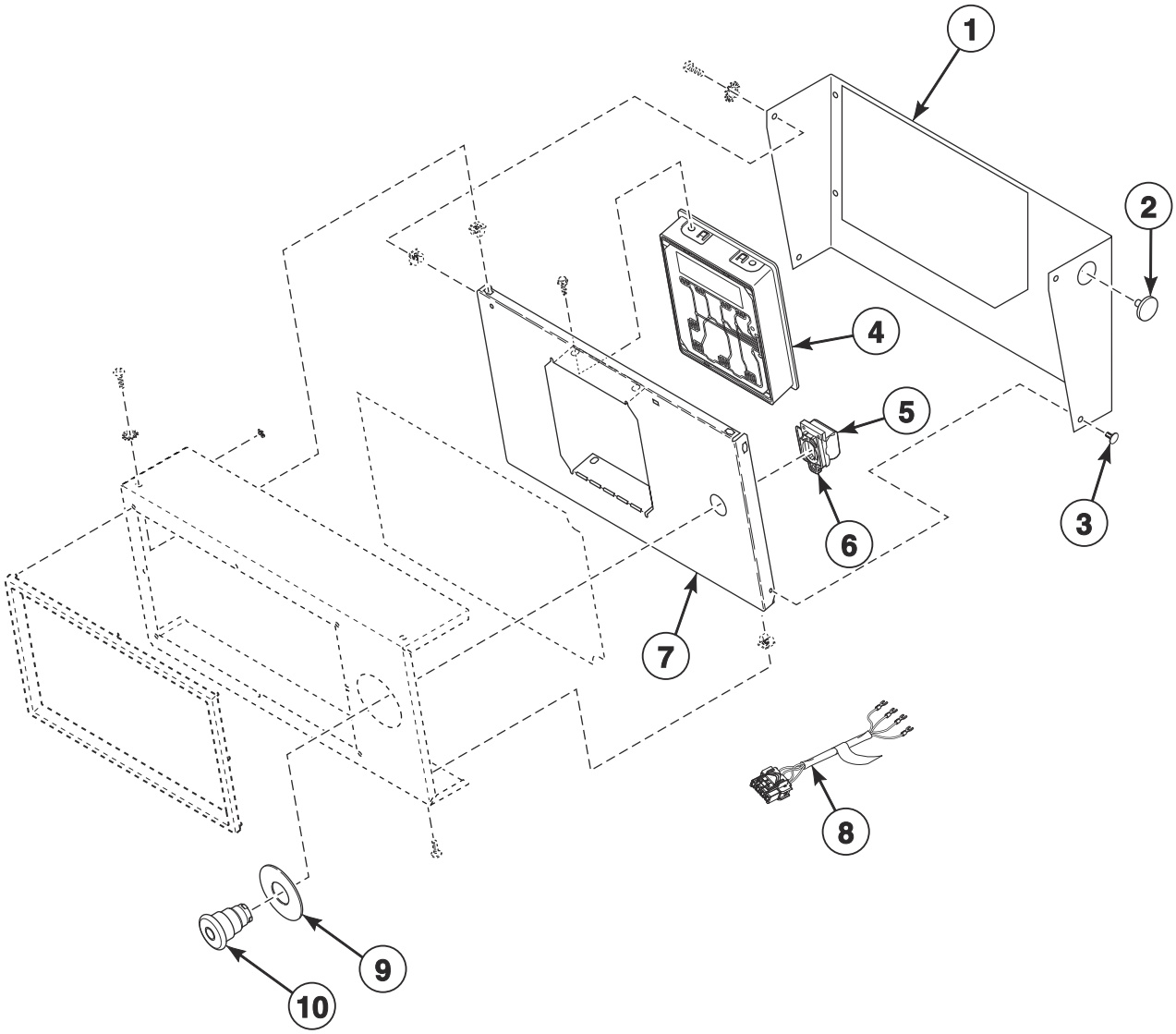

TMB3619PA_70592001

© Copyright, Alliance Laundry Systems LLC – DO NOT COPY or TRANSMIT

Dual Digital Control - F in the 7th Position (Drawing 2 of 2)

REF	PART NO.	DESCRIPTION	COMMENTS
1	44331005	Control Bracket	B, H, P and S models; Stainless steel
	44331006DG	Control Bracket	P models; Dark gray
	44331006W	Control Bracket	B, H, N, P, S and U models
	44331006B	Control Bracket	G and K models; Black
	44331006LG	Control Bracket	U models; Light gray
2	M400985	Plug	
3	430725	Pop Rivet	
4	70523101	Control Assembly	P models; Blue
	70479801	Control Assembly	G, H, K, N, S and U models; Green
	70479901	Control Assembly	B models; Red
5	F8069501	Contact Switch	2 required
6	F8538101	Contact Base	
7	44330901	Mounting Plate	
8	44272401	Emergency Stop Harness	
9	44012901	Emergency Stop Label	
10	F200233500	Emergency Stop Pushbutton	

*** Add Letter To Designate Color. Q - Bisque W - White**

© Copyright, Alliance Laundry Systems LLC – DO NOT COPY or TRANSMIT

Electronic Display Control - N in the 7th Position (Drawing 1 of 2)

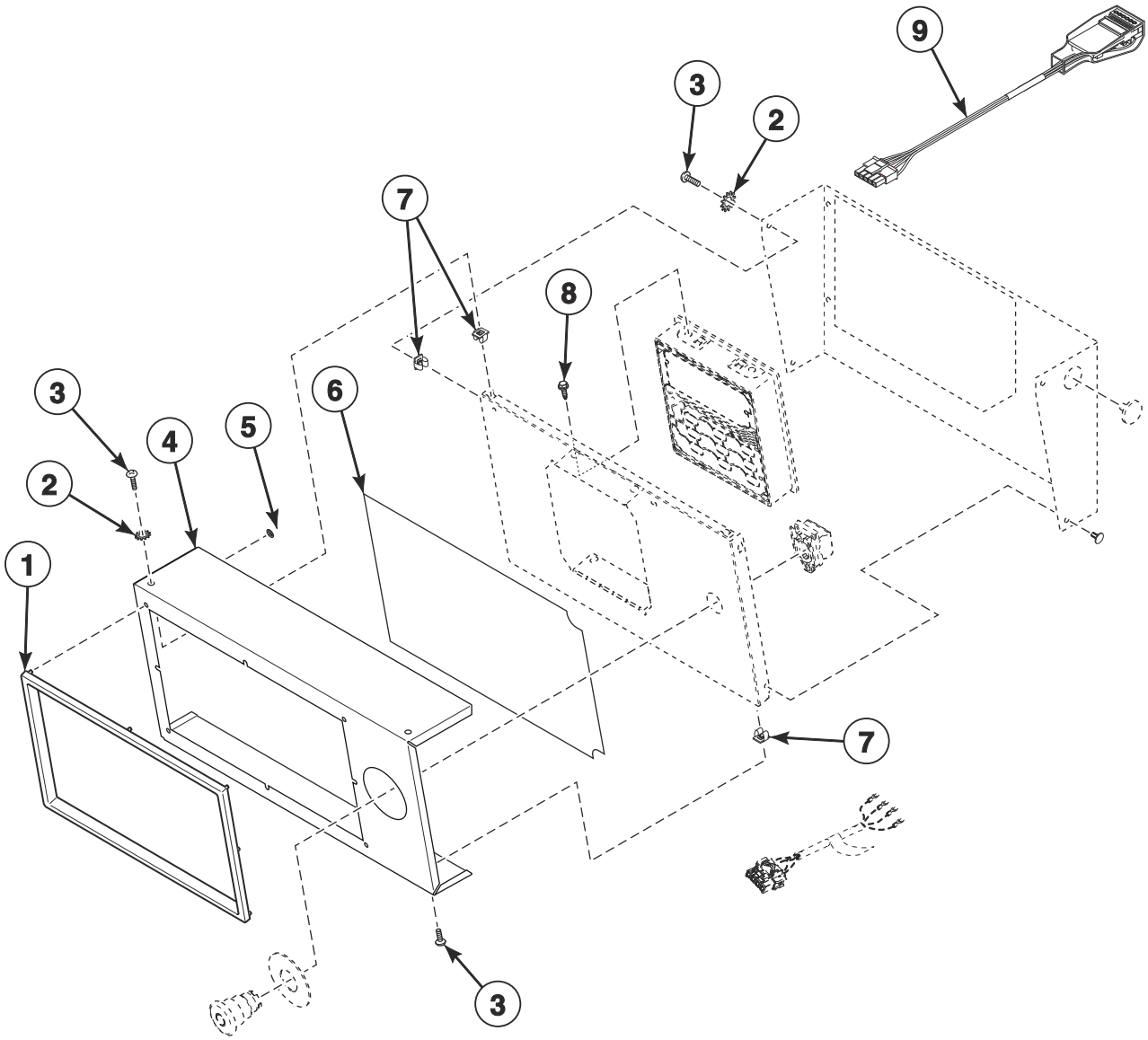

TMB3620P_70592001

© Copyright, Alliance Laundry Systems LLC – DO NOT COPY or TRANSMIT

Electronic Display Control - N in the 7th Position (Drawing 1 of 2)

REF	PART NO.	DESCRIPTION	COMMENTS
1	44016403	Control Trim	H models; Gray
	44016401	Control Trim	P and S models; Black
2	03815	Washer	
3	800930	Screw	
4	44330802	Control Cover	IEC B, P and U models; CSA B, P and U models through 12/31/18; Stainless steel; No trim
	44330805	Control Cover	IEC H, P and S models; CSA H, P and S models through 12/31/18; Stainless steel
	44330801*	Control Cover	IEC B and U models; CSA B and U models through 12/31/18
	44330806DG	Control Cover	IEC P models; CSA P models through 12/31/18; Dark gray
	44330804*	Control Cover	IEC H, N, P and S models; CSA H, N, P and S models through 12/31/18
	44330801B	Control Cover	IEC G and K models; CSA G and K models through 12/31/18; Black
	44330803LG	Control Cover	IEC U models; CSA U models through 12/31/18; Light gray
	44330811	Control Cover	CSA B, P and U models starting 1/1/19; Stainless steel; No trim; Design 3
	44330814	Control Cover	CSA H, P and S models starting 1/1/19; Stainless steel
	44330810*	Control Cover	CSA B and U models starting 1/1/19
	44330815DG	Control Cover	CSA P models starting 1/1/19; Dark gray
	44330813*	Control Cover	CSA H, N, P and S models starting 1/1/19
	44330810B	Control Cover	CSA G and K models starting 1/1/19; Black
	44330812LG	Control Cover	CSA U models starting 1/1/19; Light gray
5	M400977	Nut	8 required
6	70570601	Overlay	S models; Reversing; Design 3
	70638301	Overlay	S models; Reversing; Design 5
	70571401	Overlay	U models; Reversing; Design 3
	70638901	Overlay	U models; Reversing; Design 5
	70570801	Overlay	H models; Reversing; Design 3
	70636401	Overlay	H models; Reversing; Design 5
	70548801	Overlay	B models; Reversing
	70547801	Overlay	G and K models; Reversing
	70571601	Overlay	P models; Reversing
	70572401	Overlay	NT models through 10/9/19; All other N models; Reversing
	70570601	Overlay	NT models starting 10/10/19; Reversing
7	70030501	Expansion Clip	
8	804608	Screw	4 required
9	203361P	Machine ID Control Assembly	Model or serial number is required when ordering

*** Add Letter To Designate Color. Q - Bisque W - White**

© Copyright, Alliance Laundry Systems LLC – DO NOT COPY or TRANSMIT

Electronic Display Control - N in the 7th Position (Drawing 2 of 2)

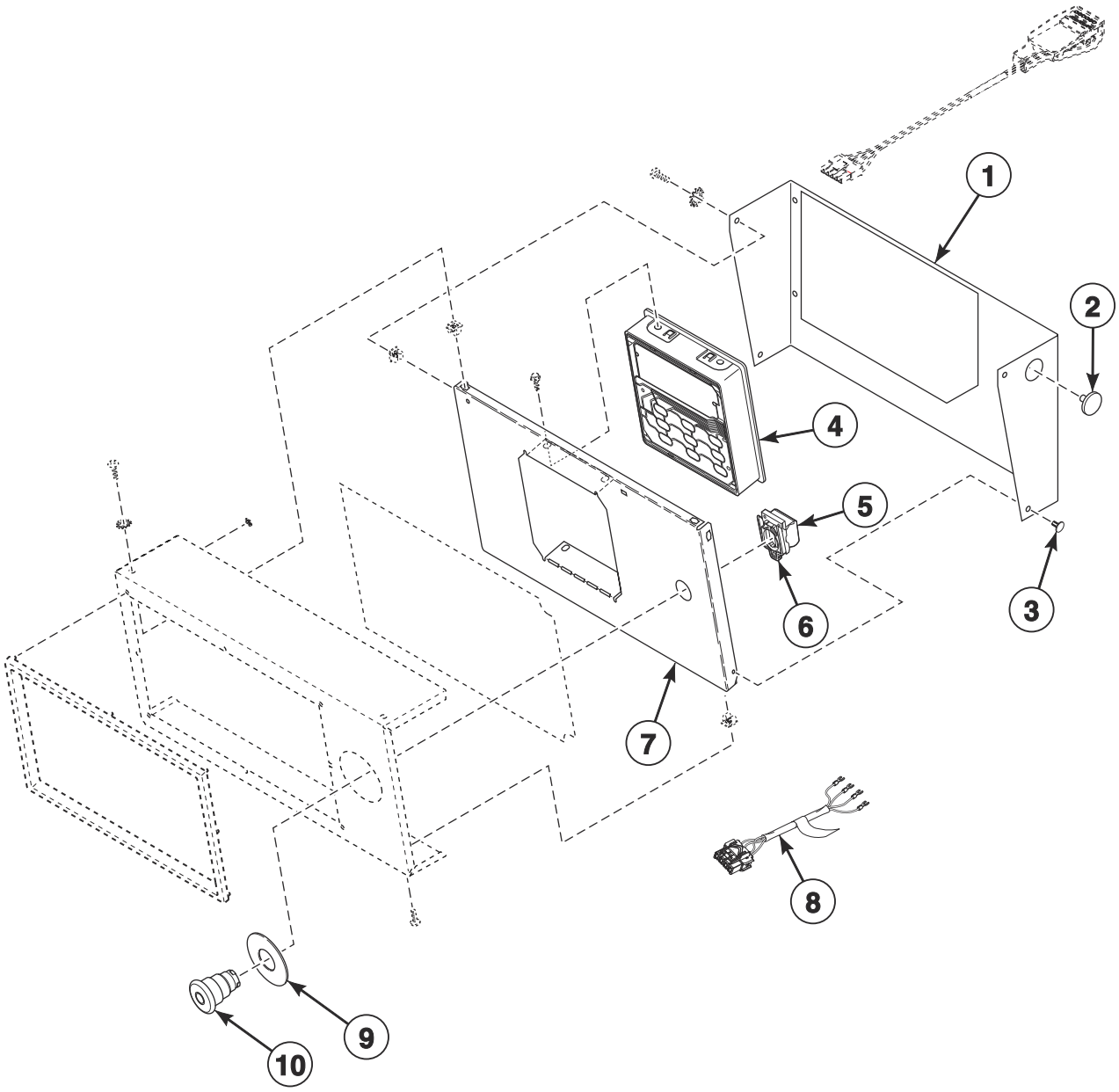

TMB3620PA_70592001

© Copyright, Alliance Laundry Systems LLC – DO NOT COPY or TRANSMIT

Electronic Display Control - N in the 7th Position (Drawing 2 of 2)

REF	PART NO.	DESCRIPTION	COMMENTS
1	44331005	Control Bracket	B, H, P and S models; Stainless steel
	44331006DG	Control Bracket	P models; Dark gray
	44331006W	Control Bracket	B, H, N, P, S and U models
	44331006B	Control Bracket	G and K models; Black
	44331006LG	Control Bracket	U models; Light gray
2	M400985	Plug	
3	430725	Pop Rivet	
4	70523004P	Control Assembly	P models; Blue
	70478804P	Control Assembly	G, H, K, N, S and U models; Green
	70478904P	Control Assembly	B models; Red
5	F8069501	Contact Switch	2 required
6	F8538101	Contact Base	
7	44330901	Mounting Plate	
8	44272401	Emergency Stop Harness	
9	44012901	Emergency Stop Label	
10	F200233500	Emergency Stop Pushbutton	

*** Add Letter To Designate Color. Q - Bisque W - White**

© Copyright, Alliance Laundry Systems LLC – DO NOT COPY or TRANSMIT

3.5 Inch Graphical Control - D in the 7th Position

U Models

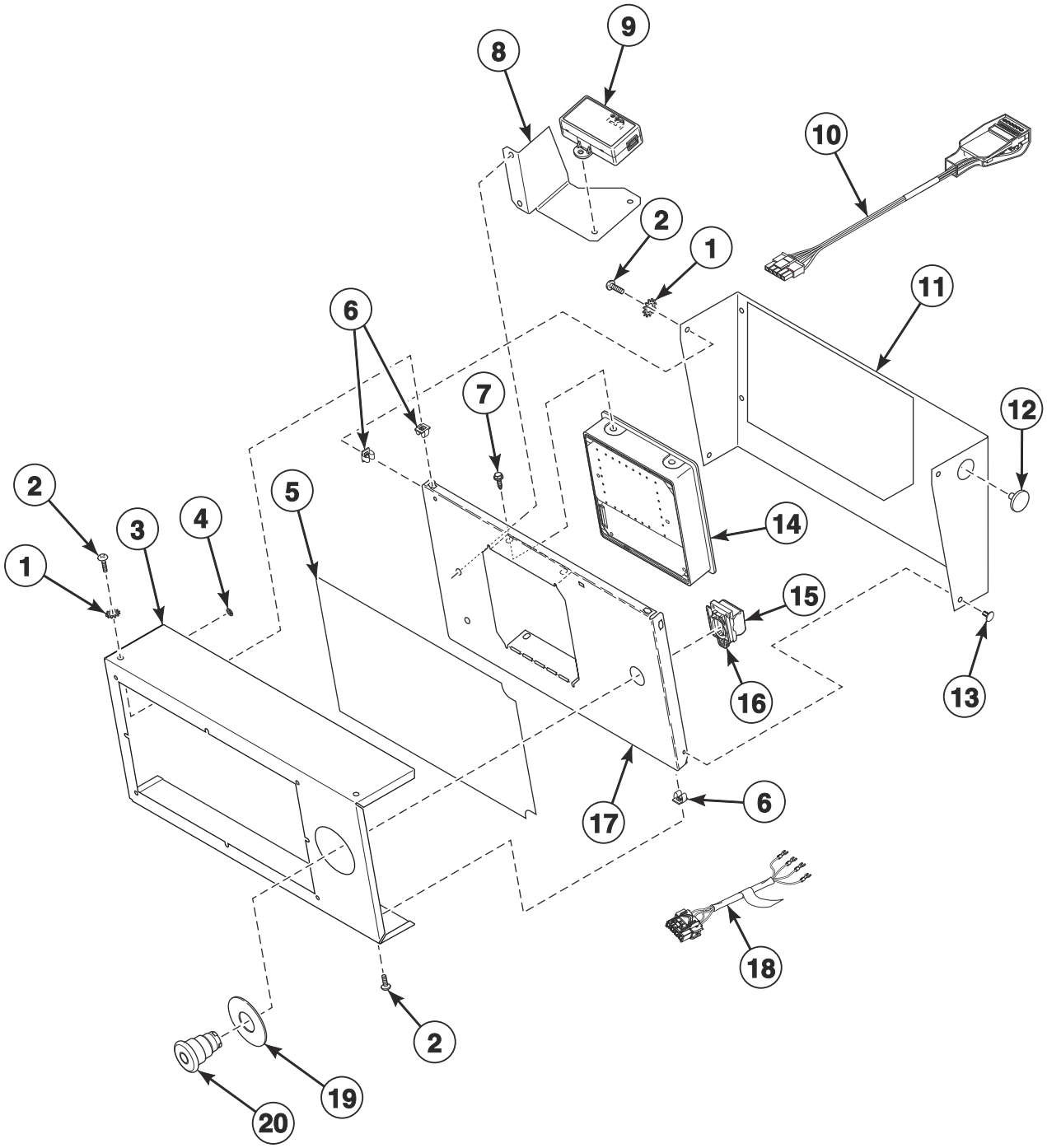

TMB3621P_70592001

© Copyright, Alliance Laundry Systems LLC – DO NOT COPY or TRANSMIT

3.5 Inch Graphical Control - D in the 7th Position

REF	PART NO.	DESCRIPTION	COMMENTS
	70596301	Wireless Network Kit	
	F8536002	Wireless Network Board Harness	
	203346	USB IR Interface Kit	
	F8617901	Harness	USB
	F8613201	FCC-IC Label	UT models
	03815	Washer	2 required; Use to attach item 9
	430497	Screw	2 required; Use to attach item 9
1	03815	Washer	
2	800930	Screw	
3	44330802	Control Cover	IEC models; CSA models through 12/31/18; Stainless steel; No trim
	44330801*	Control Cover	IEC models; CSA models through 12/31/18
	44330803LG	Control Cover	IEC models; CSA models through 12/31/18; Light gray
	44330811	Control Cover	CSA models starting 1/1/19; Stainless steel; No trim; Design 3
	44330810*	Control Cover	CSA models starting 1/1/19
	44330812LG	Control Cover	CSA models starting 1/1/19; Light gray
4	M400977	Nut	8 required
5	70595401	Overlay	Design 3 models
	70639001	Overlay	Design 5 models
6	70030501	Expansion Clip	
7	804608	Screw	
8	44331101	Mounting Bracket	
9	203440	USB-Serial Interface Assembly	
10	203361P	Machine ID Control Assembly	Model or serial number is required when ordering
11	44331006W	Control Bracket	
	44331006LG	Control Bracket	Light gray
12	M400985	Plug	
13	430725	Pop Rivet	
14	70543104	Control Assembly	
15	F8069501	Contact Switch	2 required
16	F8538101	Contact Base	
17	44330901	Mounting Plate	
18	44272401	Emergency Stop Harness	
19	44012901	Emergency Stop Label	
20	F200233500	Emergency Stop Pushbutton	

*** Add Letter To Designate Color. Q - Bisque W - White**

© Copyright, Alliance Laundry Systems LLC – DO NOT COPY or TRANSMIT

Fire Suppression System Control Box

B, G, H, K, NT, P, S and U Gas and Steam Models

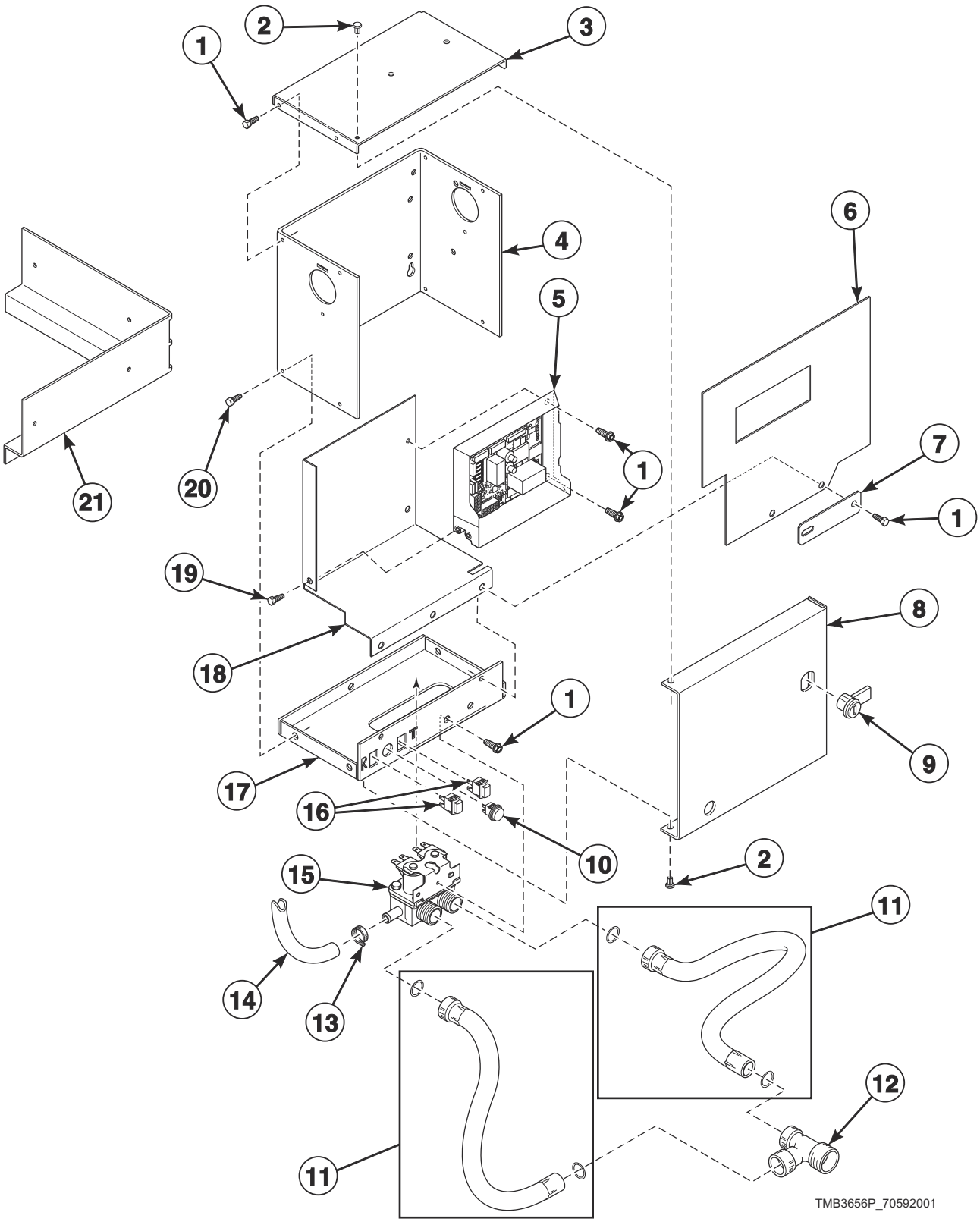

© Copyright, Alliance Laundry Systems LLC – DO NOT COPY or TRANSMIT

Fire Suppression System Control Box

REF	PART NO.	DESCRIPTION	COMMENTS
	44340301	Cold Weather Kit	
	70155601	Key	RL001; Use with item 9
	44079601	Manifold	Gas models
	44079602	Manifold	Steam models
	44334404	Control Harness	
	44334405	Water Valve Harness	
	44334408	Power Sensor Harness	
	44334407	Sensor Harness	
	44334401	Interconnect Harness	
	44324501	Warning Label	F.S.S.; CSA models
	44324500	Label Kit	F.S.S.; IEC models
	F8614401	Shock Warning Label	CSA models
	F8614201	Shock Warning Label	IEC models
	44318200	Label Kit	IEC models
	44324502	Warning Label	
	44318201	Label	CSA models
1	430497	Screw	
2	M400713	Drive Rivet	
3	44307101	Control Box Top	
4	44306701	Control Box Housing	
5	70511601	Control	
6	44326801	Shield	
7	70551701	Filter Mounting Plate	
8	44065201	Control Box Cover	
9	70733701	Lock, Key and Nut Kit	RL001 key code; Optional if same key is to be used for control lock
10	801432	Light	
11	202799	Fill Hose	2 required; GHT
	202800	Fill Hose	2 required; BSPP
12	44069101	Hose Fitting	CSA models
13	36801	Hose Clamp	
14	44073305	Hose	24.5 inches; Outlet hose
15	70519801	Mixing Valve	
16	801434W	Push-to-Start Switch	2 required
17	44065301	Control Box Base	
18	44306601	Mixing Valve Shield Bracket	
19	804608	Screw	
20	51780	Screw	
21	44310901	Support Bracket	

© Copyright, Alliance Laundry Systems LLC – DO NOT COPY or TRANSMIT

Front Panel Components

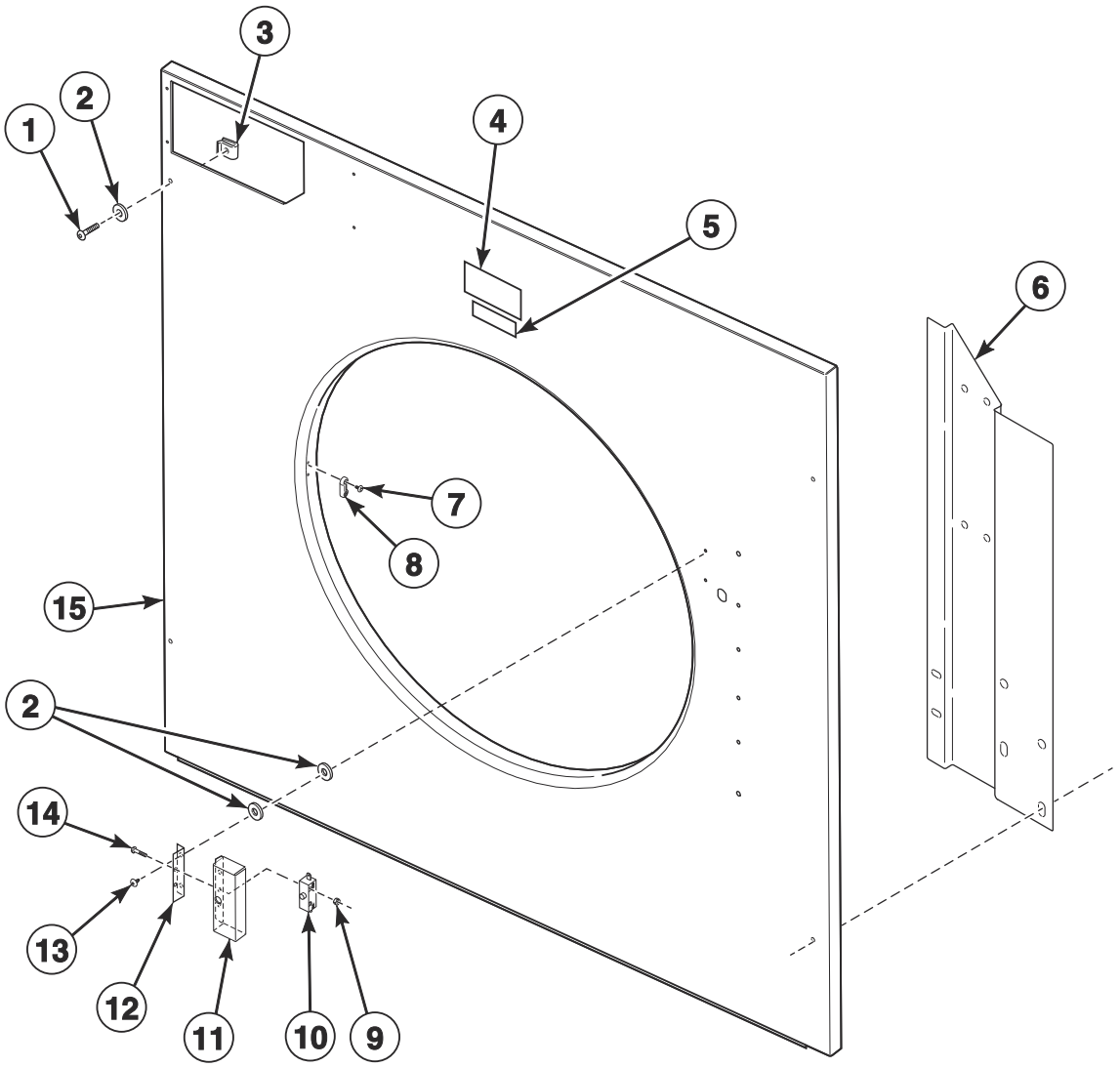

TMB3823P_70592001

© Copyright, Alliance Laundry Systems LLC – DO NOT COPY or TRANSMIT

Front Panel Components

REF	PART NO.	DESCRIPTION	COMMENTS
	298P4P	Spray Paint	White
	122P4P	Porcelain Touch-Up Paint	White
	370P4P	Porcelain Touch-Up Paint	Bisque
	44335203	Door Switch Harness	
	70482901	Door Catch Kit	
1	70182601	Screw	4 required per panel
2	800465	Washer	4 required per panel
3	70030401	Nut	Access and front panel attachment
4	70537001	Label	B, H, N, S and U models; C.A.R.E.
	70537101	Label	G and K models; F.S.S.
	44190901	Label	P models; Safe Tech
5	70472801	Label	U models
6	44286001	Door Switch Wire Channel	Design 3 models
	44368701	Upper Hinge/Wire Cover Bracket	Design 5 models
7	44166601	Pop Rivet	2 required
8	M401223	Door Latch	
9	29787	Nut	2 required
10	44312401	Switch	
11	44316301	Door Switch Cover	
12	44316601	Door Switch Shield	
13	431287	Screw	2 required
14	M402574	Screw	2 required
15	44292003DG	Front Panel	P models; Dark gray
	44292003LG	Front Panel	U models; Design 3; Light gray
	44292003W	Front Panel	Design 3 models.
	44292002	Front Panel	B, H, P, S and U models; Design 3; Stainless steel
	44368403	Front Panel	Design 5 H, S and U models; Stainless steel
	44368401W	Front Panel	Design 5 H, S and U models

*** Add Letter To Designate Color. Q - Bisque W - White**

© Copyright, Alliance Laundry Systems LLC – DO NOT COPY or TRANSMIT

Access Panel and Nameplates

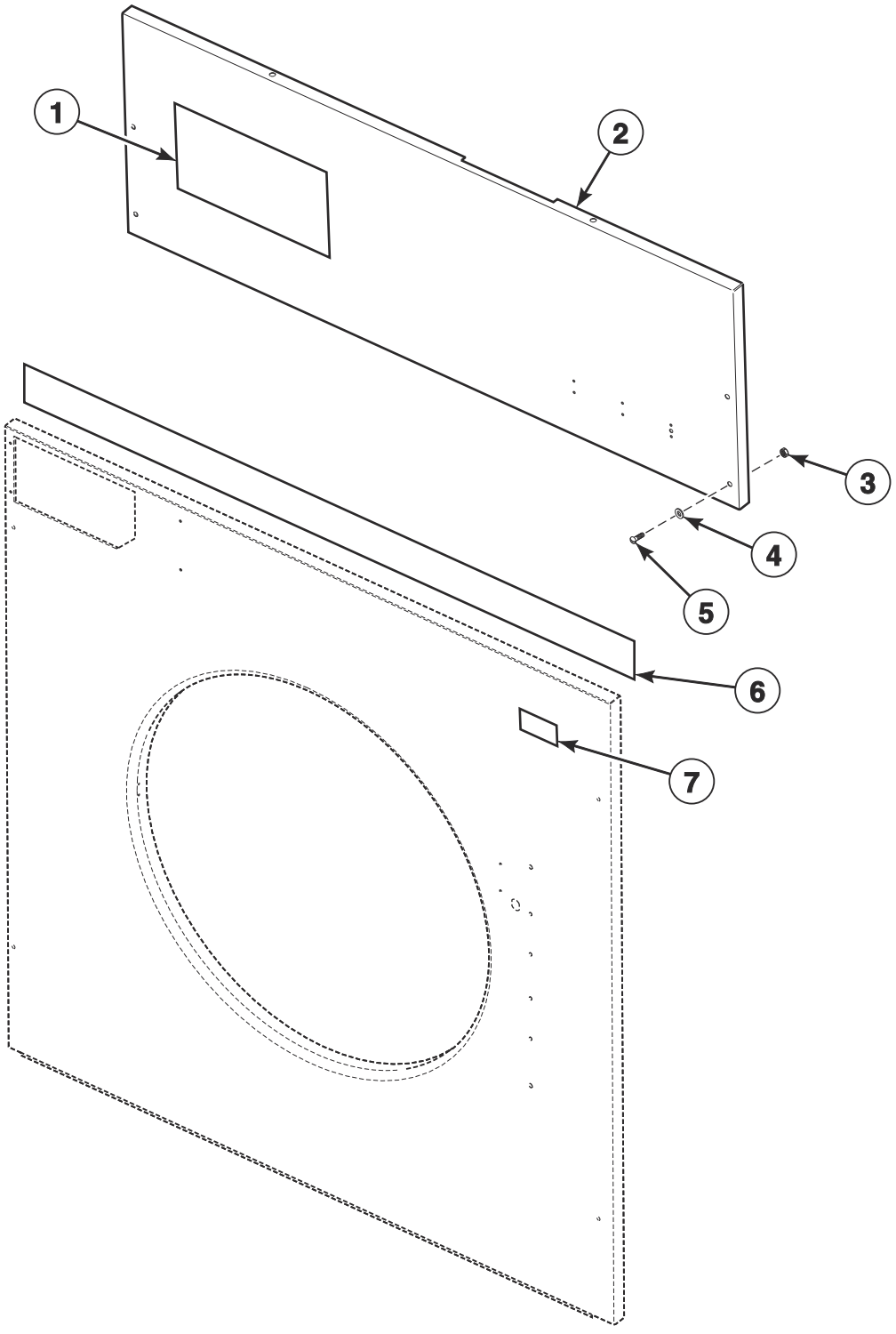

TMB3625P_70592001

© Copyright, Alliance Laundry Systems LLC – DO NOT COPY or TRANSMIT

Access Panel and Nameplates

REF	PART NO.	DESCRIPTION	COMMENTS
1	70410201	Nameplate Overlay	G models
	44130401	Nameplate Overlay	K models
	70472001	Nameplate	B models
	44010601	Nameplate	S models; Design 3
	F8688901	Nameplate	S models; Design 5
	F8688001	Nameplate	H models; Design 5
	F8443107	Nameplate	U models
2	44012609DG	Front Access Panel	P models; Dark gray
	44012609W	Front Access Panel	All models except B models; Design 3
	44012609B	Front Access Panel	B models
	44012609LG	Front Access Panel	U models; Light gray; Design 3
	44012612	Front Access Panel	H, P, S and U models; Stainless steel; Design 3
	44367201	Front Access Panel	Stainless steel; Design 5 models
	44367202W	Front Access Panel	Design 5 models
3	70030401	Nut	4 required
4	800465	Washer	4 required
5	70182601	Screw	4 required
6	70399403	Access Panel Trim	G and K models; Mounts over front panel assembly and control panel
7	567887	Nameplate	P models

*** Add Letter To Designate Color. Q - Bisque W - White**

© Copyright, Alliance Laundry Systems LLC – DO NOT COPY or TRANSMIT

Door Components

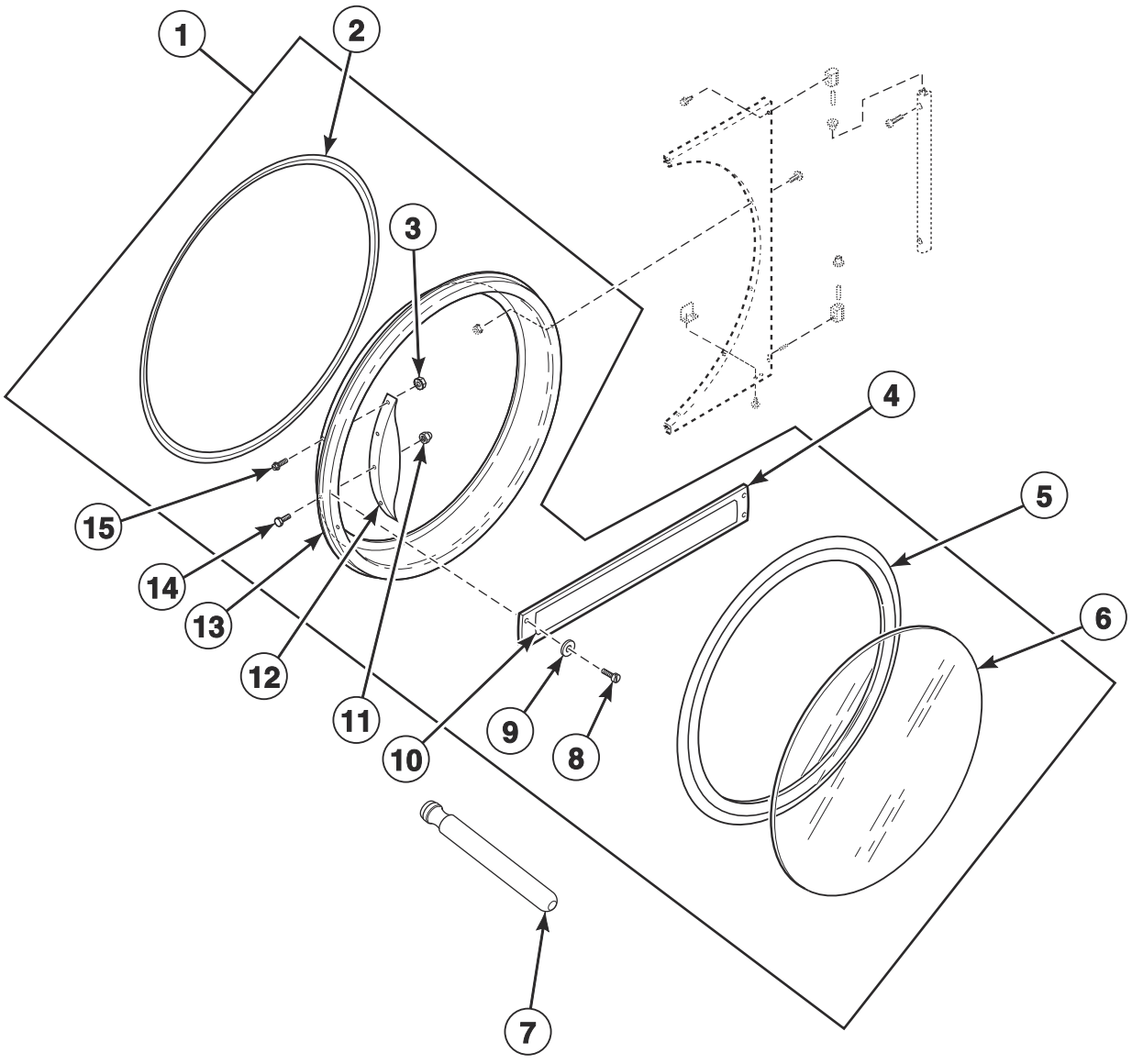

© Copyright, Alliance Laundry Systems LLC – DO NOT COPY or TRANSMIT

Door Components

REF	PART NO.	DESCRIPTION	COMMENTS
	70650401	Door Glass Label	H models; Design 5
	70707701	Door Glass Label	S models
	70707501	Max Fill Line Label	
1	44058105P	Door Assembly	H models; Stainless steel; Design 3
	44028906P	Door Assembly	S models; Stainless steel; Design 3
	44266701P	Door Assembly	U models; Stainless steel; Design 3
	44354705	Door Assembly	H models; Stainless steel; Design 5
	44354701	Door Assembly	S models; Stainless steel; Design 5
	44354703	Door Assembly	U models; Stainless steel; Design 5
	44028907P	Door Assembly	B and N models
	44292302LGP	Door Assembly	P models; Light gray
	44292302B	Door Assembly	P models; Use with stainless steel front panel; Black
	70407402P	Door Assembly	G and K models
2	70296802	Door Ring Gasket	H models with chrome handle
	44008201P	Door Ring Gasket	All other models
3	44088001	Nut	B, H, N and S models; 4 required
4	70399501B	Handle Bar	G and K models
5	70211902P	Door Seal Kit	Use Loctite 414 for seal
6	44008402P	Door Glass	H models; Design 3
	44008401P	Door Glass	All other models; Design 5 H models
7	M4221P4	Door Glass Installation Tool	
8	70412601	Pop Rivet	G and K models; 4 required
9	70409301	Washer	G and K models; 2 required
10	70414001	Label	K models; Coin
11	M414215	Nut	
12	70521102	Door Handle	H models; Design 3
	44370601	Door Handle	H models; Design 5
	44007901	Door Handle	B, N and S models
	44263801	Door Handle	U models; Use 901620 Screw, 800465 Washer, 803871 Screw and 44088001 Nut to attach; 90-degree chrome pull handle
13	44326001	Door Ring Assembly	H and S models; Stainless steel; Design 3
	44326002	Door Ring Assembly	U models; Design 3
	44326007LG	Door Ring and Handle Assembly	P models; Light gray
	44326007B	Door Ring and Handle Assembly	P models; Use with stainless steel and white front panel; Black
	44326004B	Door Ring Assembly	B and N models
	44326003B	Door Ring Assembly	G and K models
14	M400661	Screw	Door strike
15	70442101	Screw	B, H, N and S models; 4 required

© Copyright, Alliance Laundry Systems LLC – DO NOT COPY or TRANSMIT

Hinge Components - Design 3 Models

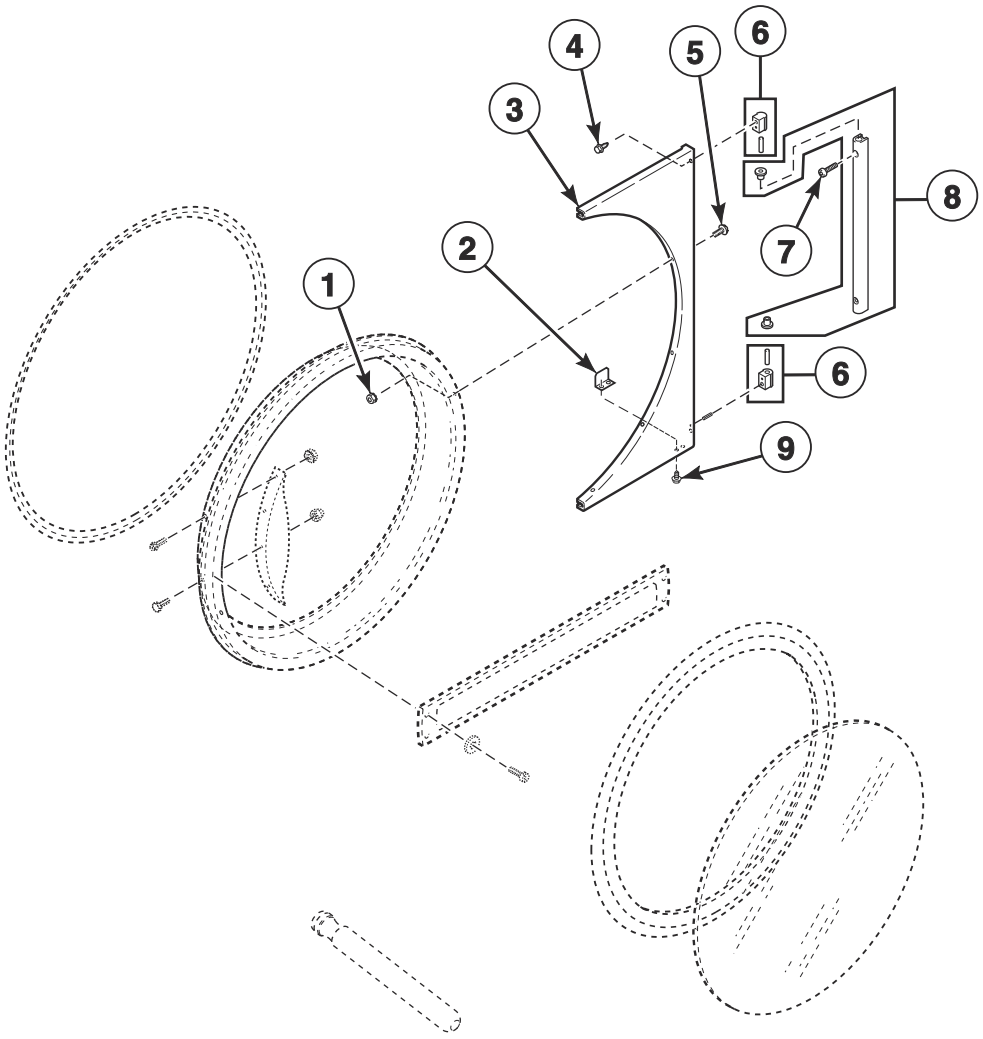

TMB3091PA_70592001

© Copyright, Alliance Laundry Systems LLC – DO NOT COPY or TRANSMIT

Hinge Components - Design 3 Models

REF	PART NO.	DESCRIPTION	COMMENTS
1	44088001	Nut	6 required
2	70215001P	Door Switch Actuator Kit	
3	44075207B	Door Hinge	Black; B, G, K and N models; P models with white and stainless steel front panels
	44075201*	Door Hinge Assembly	H, N, S and U models
	44075210	Door Hinge Assembly	H, S and U models; Stainless steel
	44075207LG	Door Hinge Assembly	P and U models; Light gray
4	70442101	Screw	3 required
5	44349101	Screw	6 required
6	M4773P3	Hinge Cam Kit	Black; B, G, K and N models; P models with white and stainless steel front panels
	M4772P3	Hinge Cam Kit	H, P, S and U models
7	70409801	Screw	Black; B, G, K and N models; P models with white and stainless steel front panels; 2 required
	70033502	Screw	H, P, S and U models; 2 required
8	44035002	Door Hinge Lug Assembly	Black; B, G, K and N models; P models with white and stainless steel front panels
	44035001	Door Hinge Lug Assembly	H, P, S and U models
9	70058501	Pop Rivet	2 required

*** Add Letter To Designate Color. Q - Bisque W - White**

© Copyright, Alliance Laundry Systems LLC – DO NOT COPY or TRANSMIT

Hinge Components - Design 5 Models

H, S and U Models

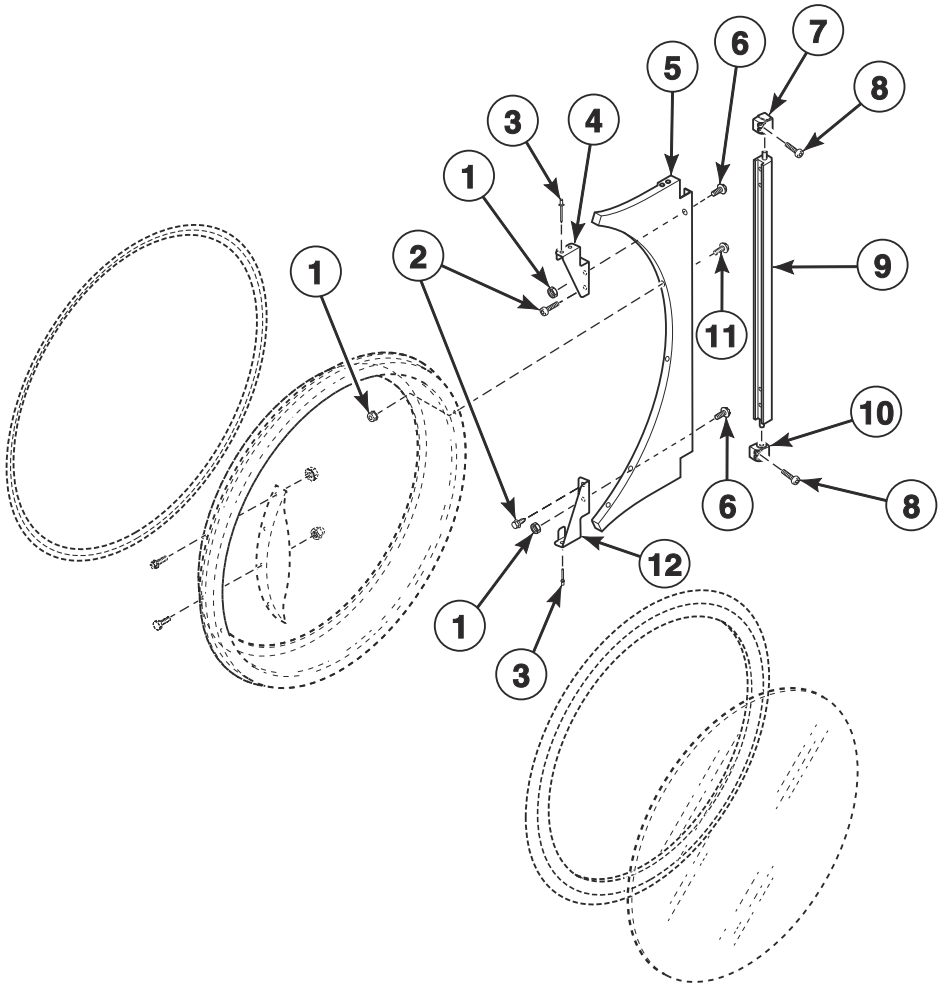

TMB3805P_70592001

© Copyright, Alliance Laundry Systems LLC – DO NOT COPY or TRANSMIT

Hinge Components - Design 5 Models

REF	PART NO.	DESCRIPTION	COMMENTS
1	44088001	Nut	
2	802822	Screw	
3	70058501	Pop Rivet	
4	44376501	Upper Hinge Gusset	
5	44366606W	Door Hinge Assembly	White
	44366604	Door Hinge Assembly	Stainless steel
	44366602LG	Door Hinge Assembly	Light gray; U models
	44366608	Door Hinge Assembly	Chrome
6	70640201	Screw	
7	70639301	Upper Lug Assembly	
8	70640301	Screw	
9	70640401	Center Hinge Lug Assembly	
10	70639302	Lower Lug Assembly	
11	44349101	Screw	
12	70632002	Lower Hinge Gusset	

© Copyright, Alliance Laundry Systems LLC – DO NOT COPY or TRANSMIT

Lint Panel Components

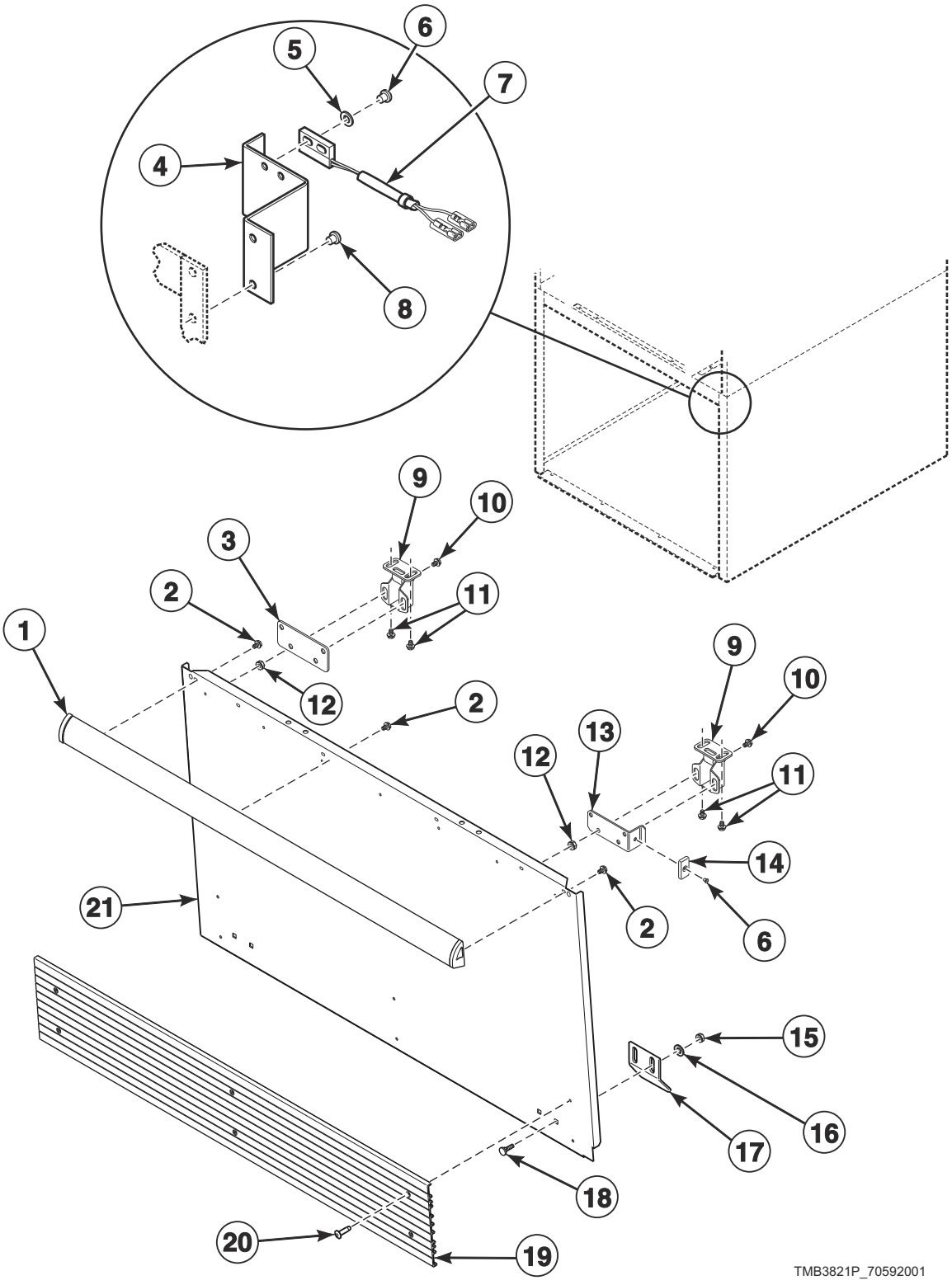

© Copyright, Alliance Laundry Systems LLC – DO NOT COPY or TRANSMIT

Lint Panel Components

REF	PART NO.	DESCRIPTION	COMMENTS
1	44049901	Handle and Caps Assembly	B, N, S and U models; P models with white and stainless steel front panels; Black; Includes endcaps
	70407211	Handle Bumper	P models
	70154416	Handle and Caps Assembly	H and U models; Gray; Includes endcaps
	70407203	Handle Bumper	G and K models; Black and blue; Does not have endcaps
2	430757	Screw	6 required
3	44014001	Roller Catch Mounting Bracket	2 required
4	44296301	Switch Bracket	
5	F431125	Washer	2 required
6	70743501	Rivet	2 required
7	F8066804	Reed Switch Assembly	
8	430725	Pop Rivet	2 required
9	H87020202	Roller Catch	2 required; Includes strike
10	70442101	Screw	8 required
11	D501086	Screw	4 required
12	44088001	Nut	8 required
13	44288401	Mounting Plate	
14	70343101	Magnet	
15	44087101	Nut	4 required
16	M400080	Washer	Design 5 models
17	44017801	Lint Panel Clip	2 required
18	44017901	Bolt	Design 3 models
	203798	Bolt	Design 5 models
19	70117609	Kickplate	All models except H models; Black; Design 3
	70117620	Kickplate	H and U models; Gray; Design 3
20	70126301	Pop Rivet	Black; 6 required
	70126401	Pop Rivet	Gray; 6 required
21	44012204DG	Lint Panel	P models; Dark gray
	44012207	Lint Panel	P models; Stainless steel; Design 5 H, S and U models
	44012203WP	Lint Panel	Design 3 models
	44012208W	Lint Panel	Design 5 H, S and U models
	44012206	Lint Panel	All models except P models; Stainless steel; Design 3
	44012203LG	Lint Panel	U models; Light gray; Design 3
	44012204LG	Lint Panel	U models; Light gray; Design 5

*** Add Letter To Designate Color. Q - Bisque W - White**

© Copyright, Alliance Laundry Systems LLC – DO NOT COPY or TRANSMIT

Cabinet and Frame Assembly

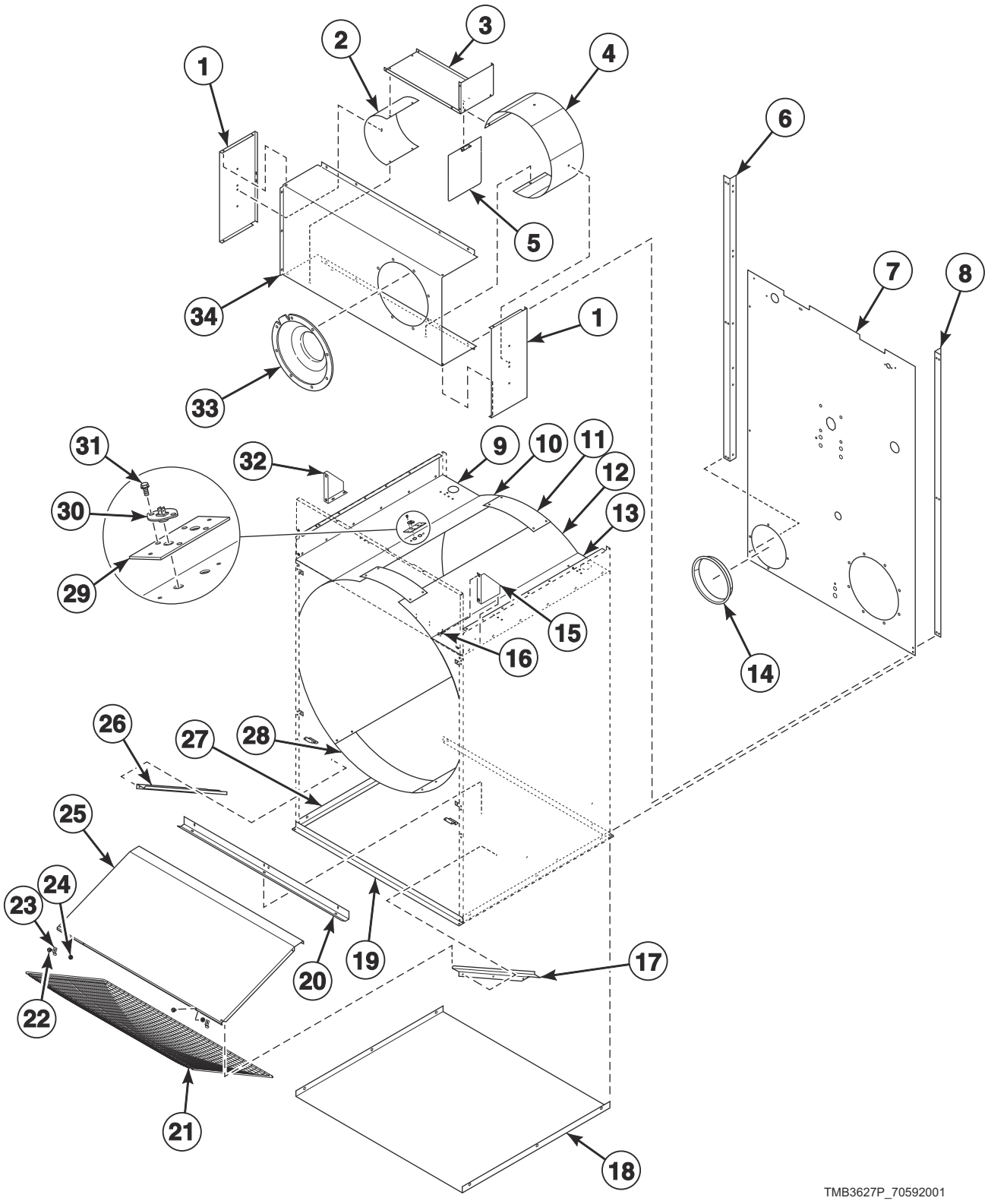

© Copyright, Alliance Laundry Systems LLC – DO NOT COPY or TRANSMIT

Cabinet and Frame Assembly

REF	PART NO.	DESCRIPTION	COMMENTS
	M402144	Felt Pad	6 required; Behind front panel
1	44327701	Blower Housing Side Panel	2 required
2	44307401	Exhaust Deflector	
3	44285601	Top Deflector	
4	44307301	Blower Housing Scroll	
5	44280303	Damper Assembly	
6	44285402	Rear Panel Support	Left outer
7	44276601	Rear Panel	
8	44285401	Rear Panel Support	Right outer
9	44312602	Support Shelf	Left
10	44286601	Cylinder Shroud	Left
11	44286401	Cylinder Shroud	Top front and rear
12	44286701	Cylinder Shroud	Right
13	44312601	Support Shelf	Right
14	H96372164	Vent Collar	
15	44028201DG	Top Access Panel	Dark gray; P models; Right
	44028201LG	Top Access Panel Gusset	Light gray; U models; Right
	44028201*	Top Access Panel Gusset	Right
16	431287	Screw	4 required
17	44286201	Lint Screen Support	Right
18	M409911	Base Pan	
19	44319501	Base Support	Front and back
20	44307501	Lint Screen Support	Back
21	44063602	Lint Screen	
22	70442101	Screw	
23	H96418413	Lint Screen Clip	
24	44088001	Nut	
25	44286101	Lint Hood	
26	44286202	Lint Screen Support	Left
27	44319401	Base Support	Left and right
28	44286501	Cylinder Shroud	Bottom rear
29	44068101	Thermistor Plate	Without fire Suppression system
	44068102	Thermistor Plate	With fire Suppression system
30	44064701	Thermistor	2 required; For fire suppression system
31	51780	Screw	
32	44028202DG	Top Access Panel Gusset	Dark gray; P models; Left
	44028202LG	Top Access Panel Gusset	Light gray; U models; Left
	44028202*	Top Access Panel Gusset	Left
33	44266902	Blower Inlet Cone	
34	44285501	Rear Lint Panel	

*** Add Letter To Designate Color. Q - Bisque W - White**

© Copyright, Alliance Laundry Systems LLC – DO NOT COPY or TRANSMIT

Rear Panel Components

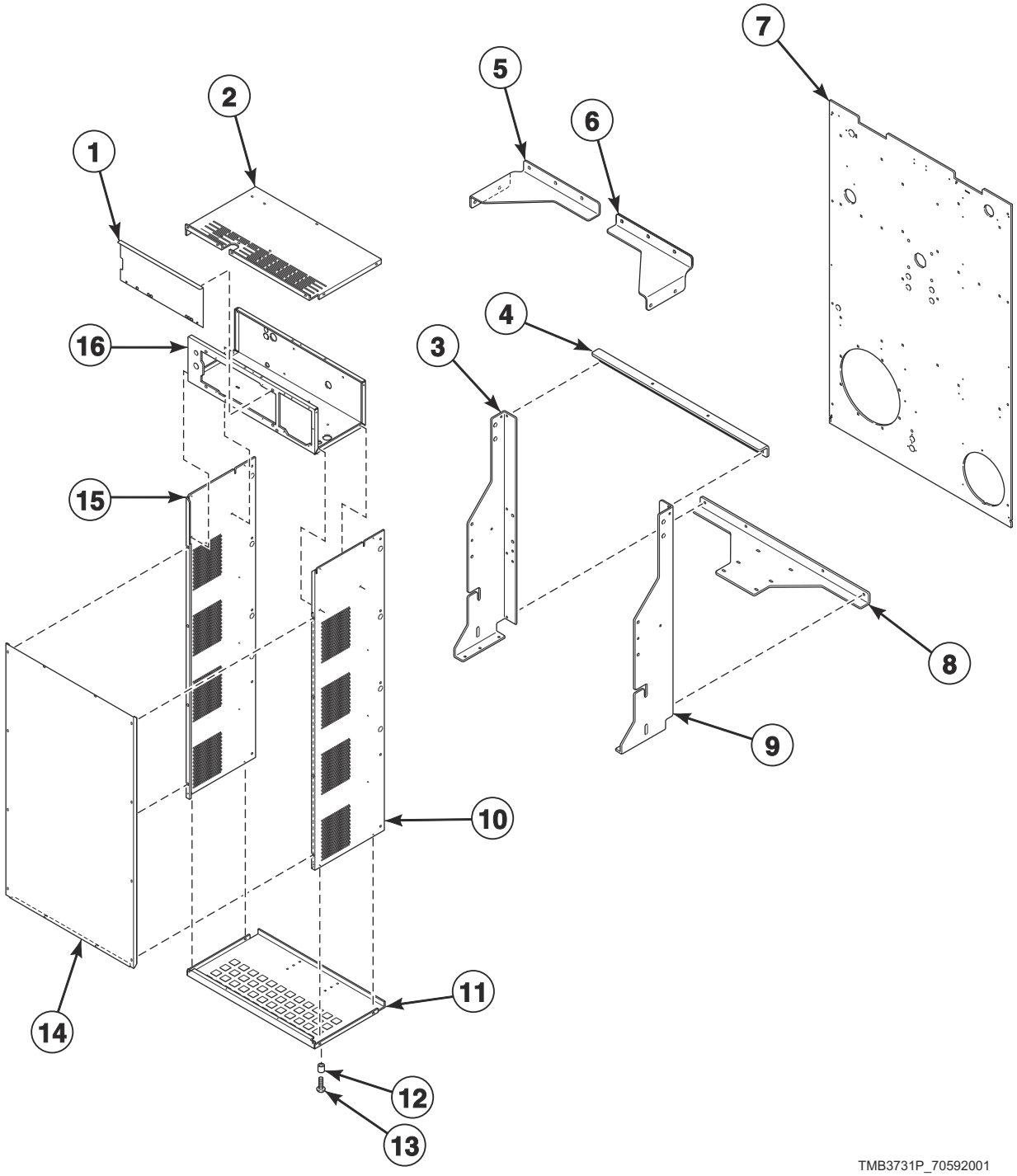

© Copyright, Alliance Laundry Systems LLC – DO NOT COPY or TRANSMIT

Rear Panel Components

REF	PART NO.	DESCRIPTION	COMMENTS
1	70507501	Control Tray Cover	
2	44313801	Belt Guard	Top
3	44310301	Rear Panel Support	Right center
4	44277001	Rear Panel Support	Top
5	44300402	Rear Panel Support	Left inner
6	44300401	Rear Panel Support	Right inner
7	44276601	Rear Panel	
8	44310401	Rear Panel Brace	Bottom
9	44310302	Rear Panel Support	Left center
10	44277801	Belt Guard	Right
11	44277301	Belt Guard	Bottom
12	56079	Panel Locator	
13	70275801	Screw	
14	44277401	Belt Guard	Rear
15	44277802	Belt Guard	Left
16	44313701	Belt Guard	Center

© Copyright, Alliance Laundry Systems LLC – DO NOT COPY or TRANSMIT

Cylinder and Trunnion Assembly

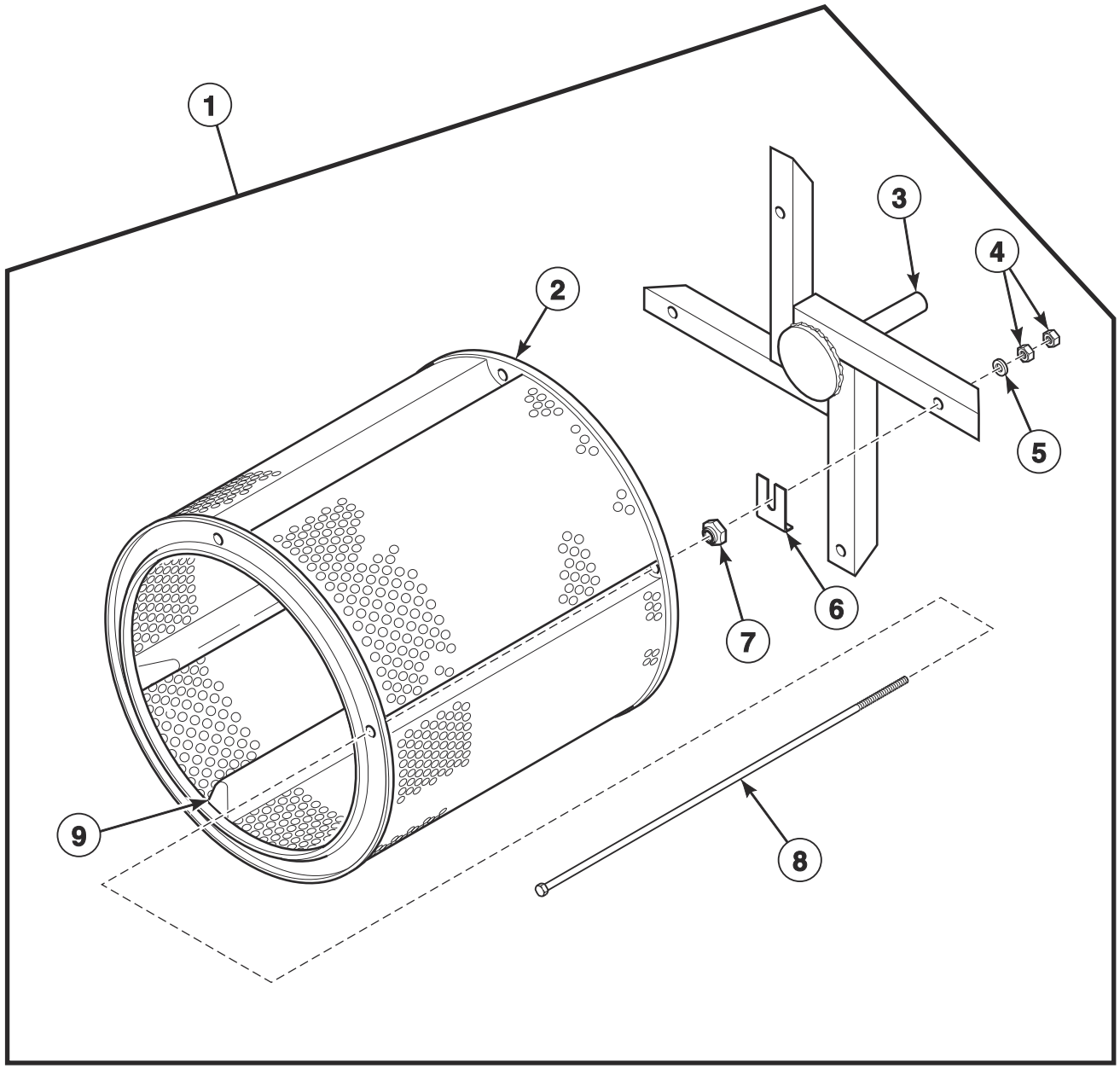

TMB1811B_70592001

© Copyright, Alliance Laundry Systems LLC – DO NOT COPY or TRANSMIT

Cylinder and Trunnion Assembly

REF	PART NO.	DESCRIPTION	COMMENTS
1	44054801	Cylinder and Trunnion Assembly	Galvanized; Non-moisture sensing
	44194101	Cylinder and Trunnion Assembly	Galvanized; Moisture sensing
	44054802	Cylinder and Trunnion Assembly	Stainless steel; Non-moisture sensing
	44194102	Cylinder and Trunnion Assembly	Stainless steel; Moisture sensing
2	H96427513	Cylinder Assembly	Galvanized; Includes items 4 and 8; Non-moisture sensing
	44193301	Cylinder Assembly	Galvanized; Moisture sensing
	M409788	Cylinder Assembly	Stainless steel; Includes items 4 and 8; Non-moisture sensing
	44193302	Cylinder Assembly	Stainless steel; Moisture sensing
3	44055501	Trunnion Assembly	Non-moisture sensing
	44055502	Trunnion Assembly	Moisture sensing
4	H88412101	Nut	8 required
5	70261401	Washer	4 required
6	M401402	Spacer	As required
7	M412334	Nut	4 required
8	H88301411	Bolt	4 required
9	44191203	Cylinder Rib Assembly	Moisture sensing
	44158101	Cylinder Rib	Non-moisture sensing; Galvanized
	44158102	Cylinder Rib	Non-moisture sensing; Stainless steel

© Copyright, Alliance Laundry Systems LLC – DO NOT COPY or TRANSMIT

Trunnion Bearings

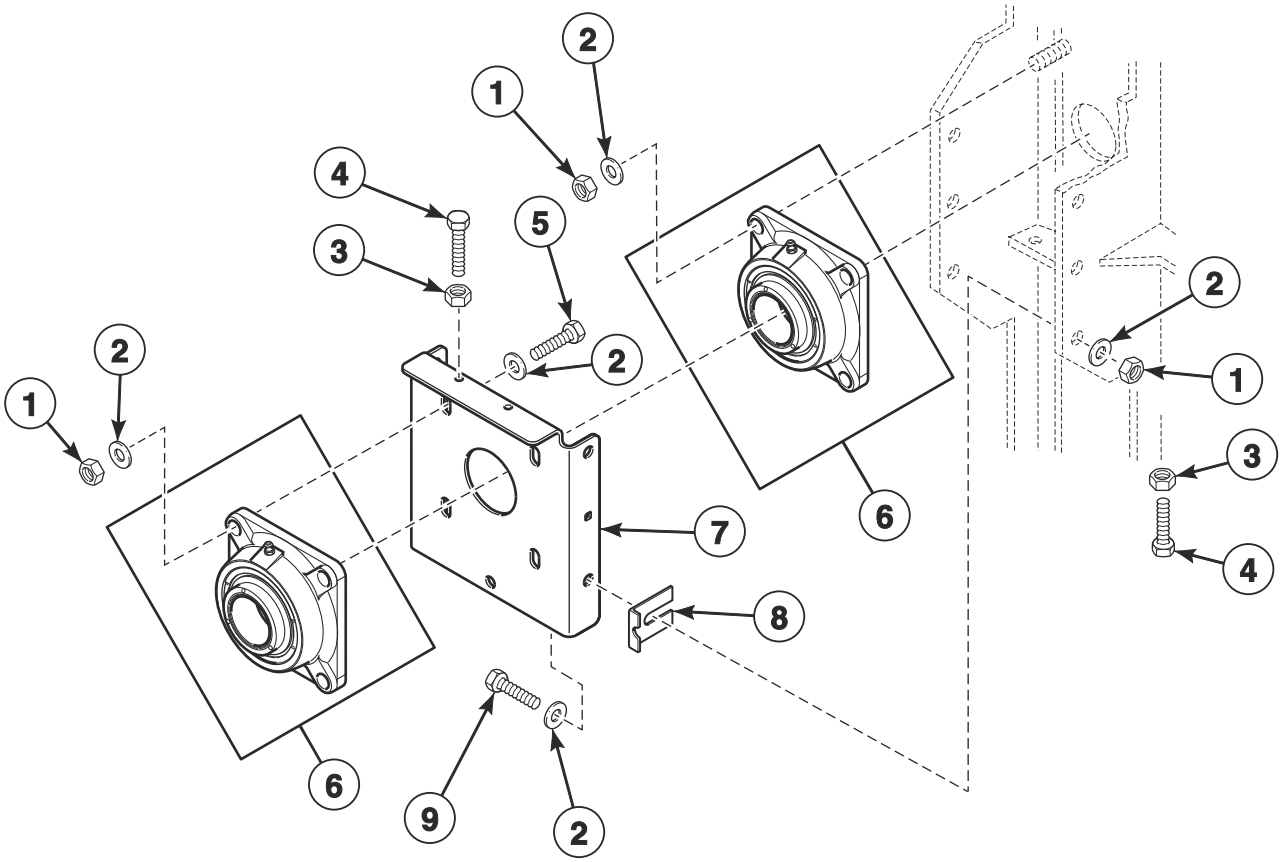

TMB3629P_70592001

© Copyright, Alliance Laundry Systems LLC – DO NOT COPY or TRANSMIT

Trunnion Bearings

REF	PART NO.	DESCRIPTION	COMMENTS
1	F8387701	Nut	
2	70261401	Washer	
3	20274	Nut	
4	800462	Screw	
5	M411165	Screw	
6	44048301P	Flange Bearing	
7	44301701	Bearing Mounting	
8	M401402	Spacer	As required
9	H88012034	Screw	

© Copyright, Alliance Laundry Systems LLC – DO NOT COPY or TRANSMIT

Moisture Sensing Components

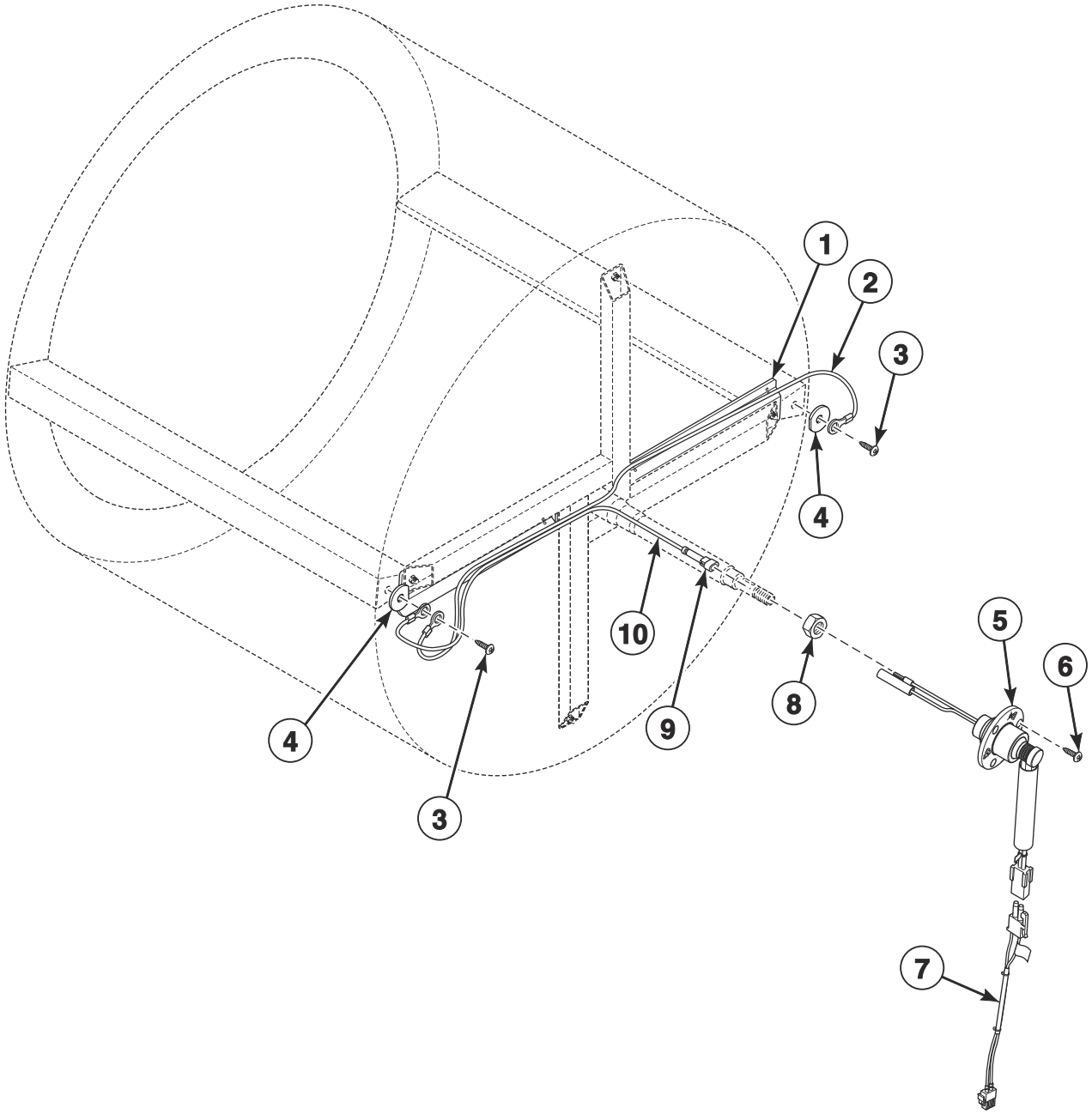

TMB4042P

© Copyright, Alliance Laundry Systems LLC – DO NOT COPY or TRANSMIT

Moisture Sensing Components

REF	PART NO.	DESCRIPTION	COMMENTS
1	44239001	Wireway Channel	
2	44208101	Rib Wire	
3	44338901	Screw	
4	44238902	Washer	
5	44222702	Slip Ring Assembly	
6	70442101	Screw	
7	44333903	Moisture Sensor Harness	Goes from item 5 to main harness
8	M400033	Nut	
9	44370401	1 Circuit Plug Housing	
10	44344703	Moisture Sensing Harness Kit	

© Copyright, Alliance Laundry Systems LLC – DO NOT COPY or TRANSMIT

Cylinder Motor Components

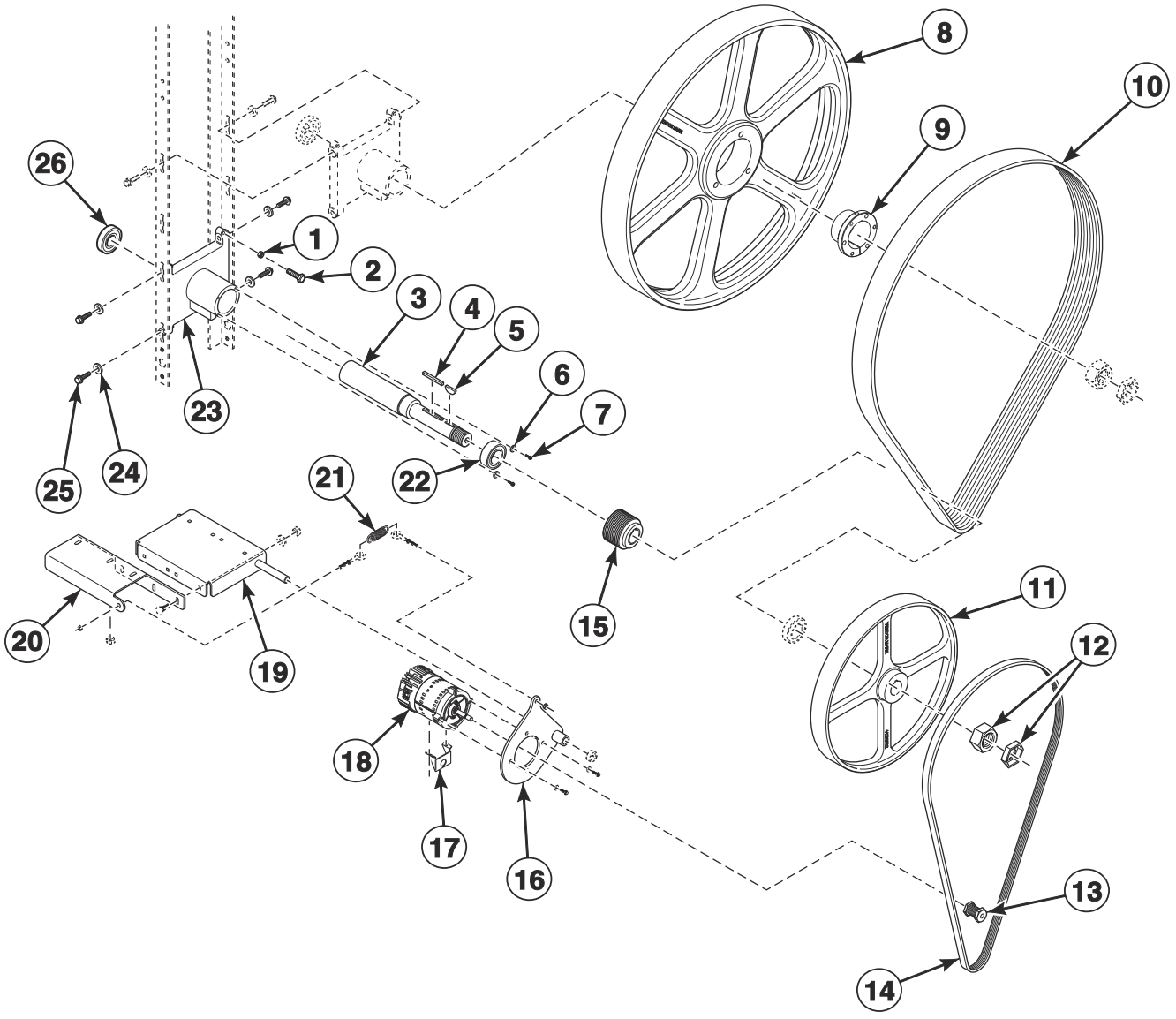

TMB3953P

© Copyright, Alliance Laundry Systems LLC – DO NOT COPY or TRANSMIT

Cylinder Motor Components

REF	PART NO.	DESCRIPTION	COMMENTS
	44335306	Inverter Motor Harness	Cylinder
	204454	Ferrite	Korean models; Applied to motor wires
	44375001P	Trunnion Assembly	Includes items 6, 7, 22, 23 and 26
1	M400026	Nut	
2	M400650	Bolt	
3	44303101	Idler Shaft	
4	M405232	Key	
5	M400008	Key	
6	20103	Washer	
7	70187201	Screw	
8	44289601	Pulley	
9	F280409P	Bushing	Includes 3 of 44079203 Screw (torque to 180 in-lbs [20.34 Nm]), 3 of M400013 Washer, 902094 Set Screw (torque to 87 in-lbs [9.83 Nm]) and key
10	44293702	V-Belt	
11	44289502	Pulley	
12	M400033	Nut	
13	44267602	Motor Pulley	
14	44309402	V-Belt	
15	44302901	Micro V Pulley	
16	44311501	Motor Pivot Plate Weldment	
17	44317901	Motor Conduit Bracket	
18	44259701P	Drive Motor	1.5 HP; 230 Volt/3 Phase
	44259801P	Drive Motor	1.5 HP; 460 Volt/3 Phase
19	44310601	Motor Pivot Bracket Weldment	
20	44310701	Motor Pivot Brace	
21	F8440701	Extension Spring	
22	M413923P	Bearing	
23	M413826	Trunnion Housing	
24	70261401	Washer	
25	M400063	Screw	
26	44041901P	Ball Bearing	

© Copyright, Alliance Laundry Systems LLC – DO NOT COPY or TRANSMIT

Blower and Exhaust Components

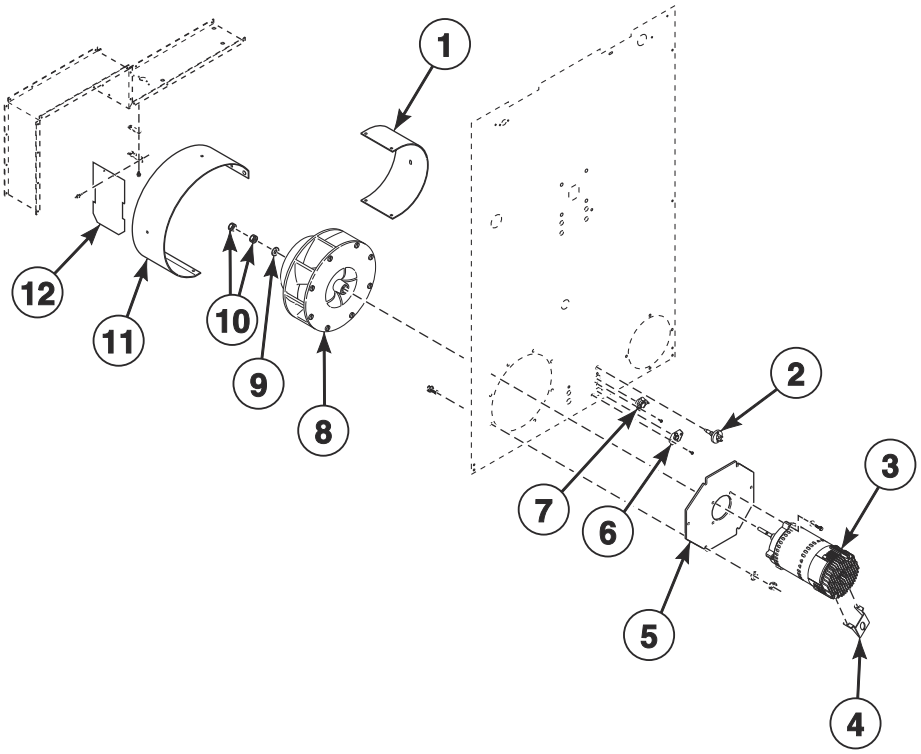

TMB4036P

© Copyright, Alliance Laundry Systems LLC – DO NOT COPY or TRANSMIT

Blower and Exhaust Components

REF	PART NO.	DESCRIPTION	COMMENTS
	44335307	Inverter Motor Harness	Fan
	204454	Ferrite	Korean models; Applied to motor wires
1	44307401	Exhaust Deflector	
2	M414704	Thermistor	
3	44259301P	Fan Motor	1.5 HP; 230 Volt/3 Phase
	44259401P	Fan Motor	1.5 HP; 460 Volt/3 Phase
4	44317901	Motor Conduit Bracket	
5	44311301	Blower Motor Mounting Plate	
6	70530905	Limit Thermostat	
7	44328002	Limit Thermostat	
8	44267201	Blower Assembly	
9	M400991	Washer	
10	M400022	Nut	
11	44307301	Blower Housing Scroll	
12	44280303	Damper Assembly	

© Copyright, Alliance Laundry Systems LLC – DO NOT COPY or TRANSMIT

Airflow Switch

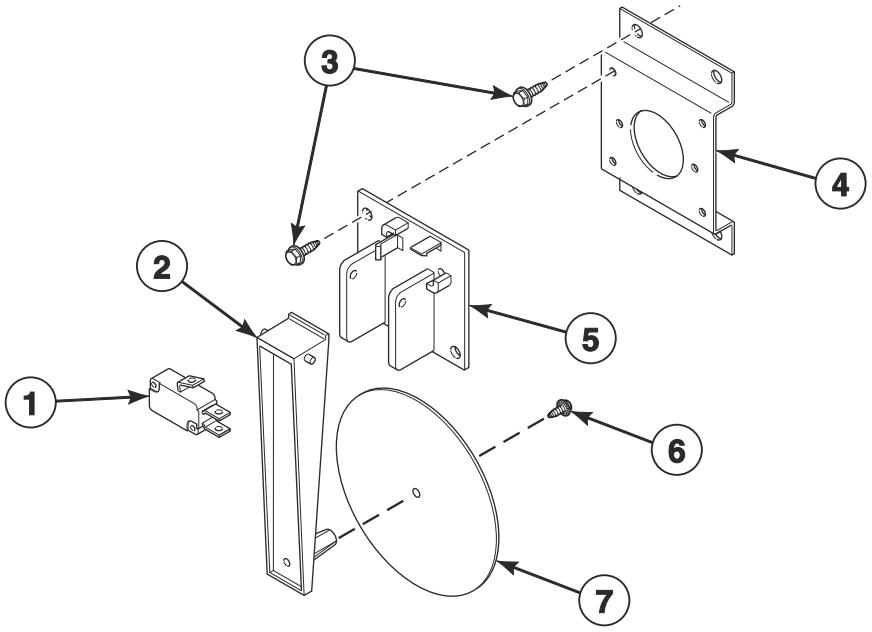

TMB3632P_70592001

© Copyright, Alliance Laundry Systems LLC – DO NOT COPY or TRANSMIT

Airflow Switch

REF	PART NO.	DESCRIPTION	COMMENTS
	70429601P	Airflow Switch Kit	Includes items 1, 2 and 5-7
1	70411901	Switch	
2	70319401	Airflow Switch Arm	
3	430497	Screw	
4	70356301	Switch Bracket	
5	70319602	Airflow Switch and Arm Bracket	
6	430757	Screw	
7	70319201	Airflow Switch Vane	

© Copyright, Alliance Laundry Systems LLC – DO NOT COPY or TRANSMIT

Gas Heater Components

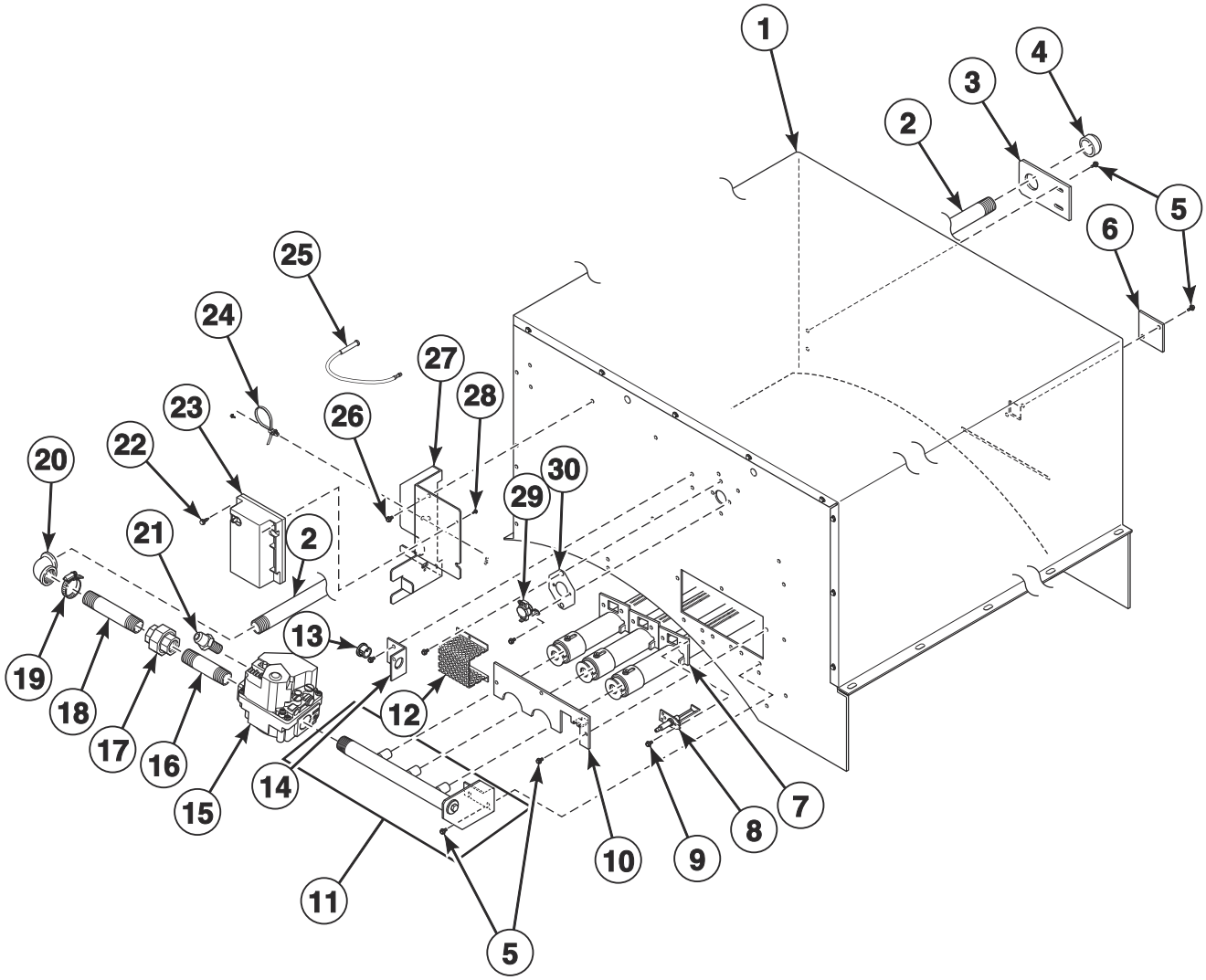

TMB3633P_70592001

© Copyright, Alliance Laundry Systems LLC – DO NOT COPY or TRANSMIT

Gas Heater Components

REF	PART NO.	DESCRIPTION	COMMENTS
	70564304	Stove Limit Harness	
	44334603	ICM Harness	
	44328804	L.P. Conversion Kit	A, T and G market models; 0-2,000 feet
	44330303	L.P. Conversion Kit	IEC models; 0-2,000 feet
	44273502	Gas Valve Harness	Double; CE models
	44273501	Gas Valve Harness	Single
	44333401	Gasket	2 required; Use with item 1
	44324201	Caution Label	Australian models; Repeat ignition reset
	D503887	Label	Australian models; Gas
	70535901	Notice Label	Australian models; Natural Gas (N.G.)
	70544901	Notice Label	Australian models; Liquid Petroleum Gas (L.P.)
	44178803	Adapter	IEC models; BPT/NPT
	44342901	Reducer	IEC models
	H85101608	Nipple	IEC models
	M413021	Bushing	IEC models
	44174201	Pipe Tee	IEC models
1	44248801	Gas Stove Assembly	
2	44252401	Pipe Nipple	
3	44249301	Pipe Bracket	
4	44087801	Pipe Cap	
5	430497	Screw	
6	70159601	Igniter Cover	
7	M412025P	Burner	3 required
8	44328701P	Spark Electrode	
9	51782	Screw	2 required
10	44315101	Burner Hole Cover	
11	44390001	Spud Holder Weldment	
12	M414477	Thermostat Cover	
13	M400770	Snap Bushing	
14	431078	Stove Limit Harness Bracket	
15	44316801	Gas Valve	CE models; N.G.
	44316802	Gas Valve	CE models; L.P.
	44166701	Gas Valve	T and G market models; N.G.
	44166702	Gas Valve	T and G market models; L.P.
	44166703	Gas Valve	All other models; N.G.
	44166704	Gas Valve	All other models; L.P.
16	44249501	Pipe Nipple	
17	M411419	Pipe Union	
18	44252301	Pipe Nipple	
19	20391	Hose Clamp	
20	44249401	Pipe Elbow	
21	44231601	Pressure Fitting	IEC models
22	51783	Screw	
23	70482001	Ignition Control	T and G market models
	70482002P	Ignition Control	IEC models
24	M405829	Cable Tie	
25	44239704	High Voltage Suppression Cable	
26	51780	Screw	
27	44245701	Gas Valve Bracket	
28	38272	Screw	
29	44328105	Limit Thermostat	
30	44312501	Thermostat Opening Cover	

© Copyright, Alliance Laundry Systems LLC – DO NOT COPY or TRANSMIT

Burner Orifices

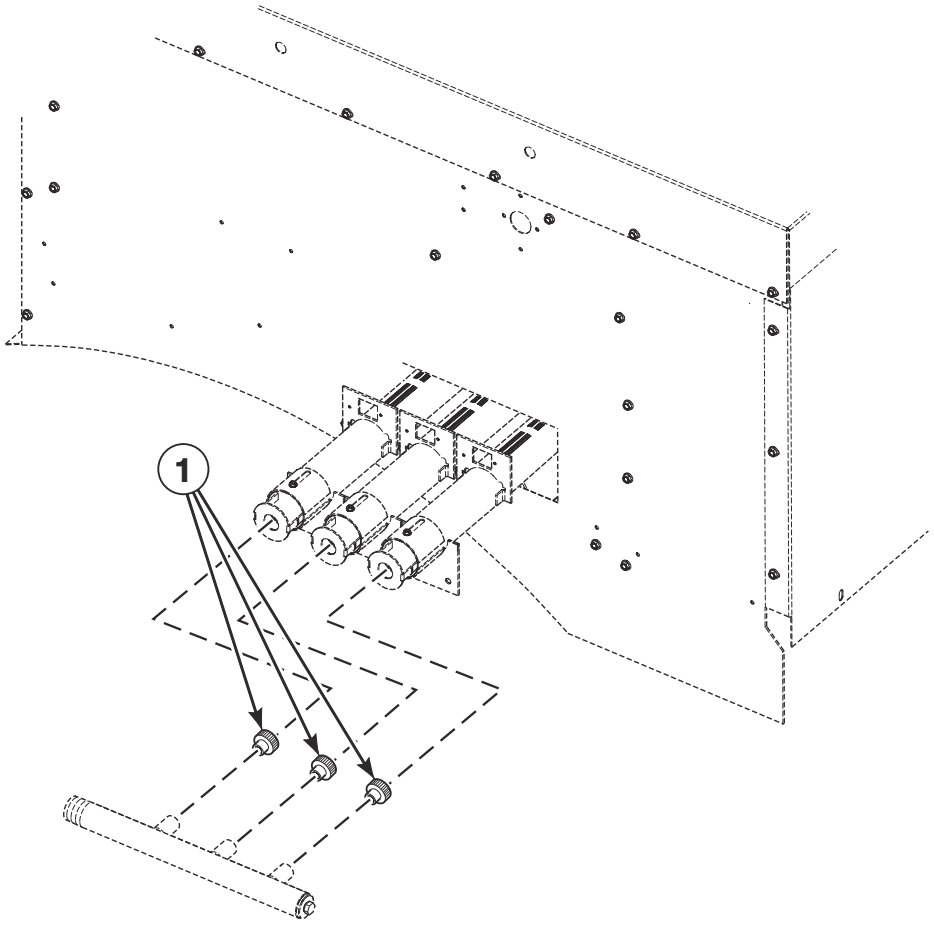

TMB3215P_70592001

© Copyright, Alliance Laundry Systems LLC – DO NOT COPY or TRANSMIT

Burner Orifices

REF	PART NO.	DESCRIPTION	COMMENTS
	44357507	High Altitude Orifice Kit	CSA Natural Gas (N.G.) models
	44357508	High Altitude Orifice Kit	CSA Liquid Petroleum Gas (L.P.) models
1	70684147	Burner Orifice	N.G. models; Drill no. 16 (4.50 mm); 0-2,000 feet
	70684144	Burner Orifice	N.G. models; Drill no. 18 (4.31 mm); 2,001-4,000 feet
	70684142	Burner Orifice	N.G. models; Drill no. 20 (4.09 mm); 4,001-6,000 feet
	70684140	Burner Orifice	N.G. models; Drill no. 22 (3.99 mm); 6,001-8,000 feet
	70684137	Burner Orifice	N.G. models; Drill no. 25 (3.80 mm); 8,001-10,000 feet
	70684122	Burner Orifice	Models with 2nd digit A, G, H, J, K, L and T; L.P.; Drill no. 35 (2.79 mm); 0-2,000 feet
	70684119	Burner Orifice	Models with 2nd digit A, G, H, J, K, L and T; L.P.; Drill no. 37 (2.64 mm); 2,001-4,000 feet
	70684118	Burner Orifice	Models with 2nd digit A, G, H, J, K, L and T; L.P.; Drill no. 38 (2.58 mm); 4,001-6,000 feet
	70684116	Burner Orifice	Models with 2nd digit A, G, H, J, K, L and T; L.P.; Drill no. 40 (2.49 mm); 6,001-8,000 feet
	70684114	Burner Orifice	Models with 2nd digit A, G, H, J, K, L and T; L.P.; Drill no. 42 (2.37 mm); 8,001-10,000 feet
	70684118	Burner Orifice	CE models; L.P.; Drill no. 38 (2.58 mm); 0-2,000 feet
	70684115	Burner Orifice	CE models; L.P.; Drill no. 41 (2.44 mm); 2,001-4,000 feet
	70684114	Burner Orifice	CE models; L.P.; Drill no. 42 (2.37 mm); 4,001-6,000 feet
	70684113	Burner Orifice	CE models; L.P.; 2.30 mm; 6,001-8,000 feet
	70684111	Burner Orifice	CE models; L.P.; 2.20 mm; 8,001-10,000 feet

© Copyright, Alliance Laundry Systems LLC – DO NOT COPY or TRANSMIT

Steam Heater Components

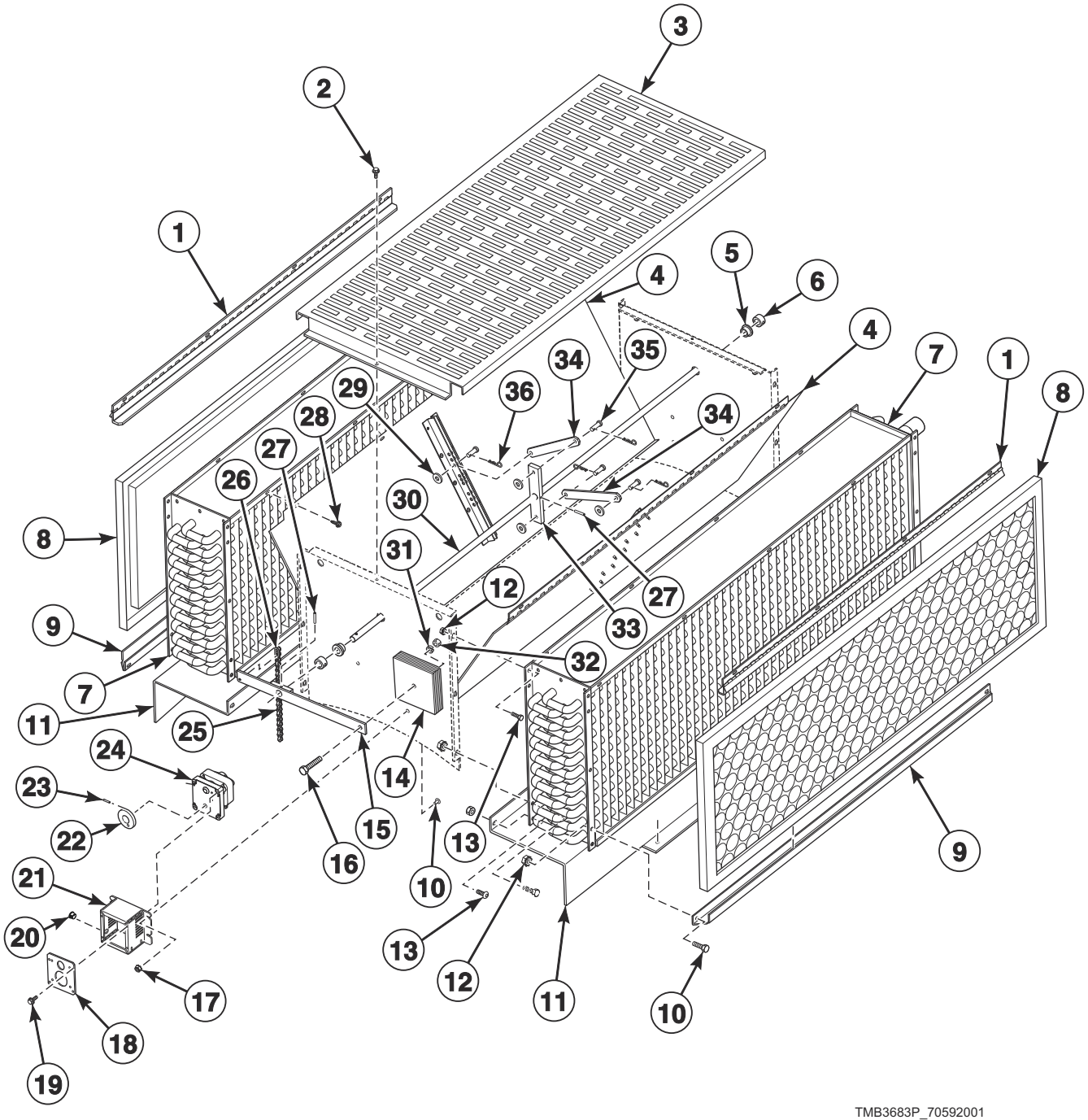

© Copyright, Alliance Laundry Systems LLC – DO NOT COPY or TRANSMIT

Steam Heater Components

REF	PART NO.	DESCRIPTION	COMMENTS
	44273606	Damper Motor Harness	
	F8520703	Steam Valve Harness	
	70564302	Stove Limit Bypass Harness	
	70523301	Harness Adapter Plate	
	44314801	Steam Adapter Kit	IEC models
	44317501	Steam Heater Assembly	CRN models
	44317301	Steam Heater Assembly	All other models
1	44088101	Steam Filter Top Hinge Assembly	2 required
2	M405188	Screw	
3	44115101	Steam Cover	
4	H96387519	Damper	2 required; Use M405750 Pop Rivet
5	M414459	Bushing	2 required
6	M414451	Shaft Collar	2 required
7	44256401	Steam Coil	CRN models; 2 required
	H96382023P	Steam Coil	All other models; 2 required
8	44172201	Filter	IEC models; 2 required
	H96382106	Steam Coil Filter	CSA models; 2 required
9	H96388087	Filter Channel	2 required; Upper
10	808210	Screw	2 required
11	M411550	Steam Coil Support	3 required
12	29786	Nut	3 required
13	02422	Screw	3 required
14	44332601	Steam Damper Counterweight	6 required
15	44332701	Shaft Actuator Assembly	
16	H88010574	Screw	
17	23951	Nut	3 required
18	44327501	Damper Motor Plate	
19	61199	Screw	
20	M411826	Snap Bushing	
21	44327401	Damper Motor Cover	
22	H96388178	Drive Wheel	Damper
23	H88900683	Spring Pin	Damper
24	44308101	Damper Motor	
25	H96388186	Drive Chain	
26	H96382072P	Master Link	2 required
27	H88970256	Roll Pin	2 required
28	D501086	Screw	
29	800465	Washer	4 required
30	H96388079	Damper Shaft	
31	M400013	Washer	
32	70142	Nut	
33	44096401	Steam Damper Actuator	
34	44333001	Steam Damper Link	2 required
35	44091501	Clevis Pin	4 required
36	44091601	Hairpin Cotter	4 required

© Copyright, Alliance Laundry Systems LLC – DO NOT COPY or TRANSMIT

Steam Valve

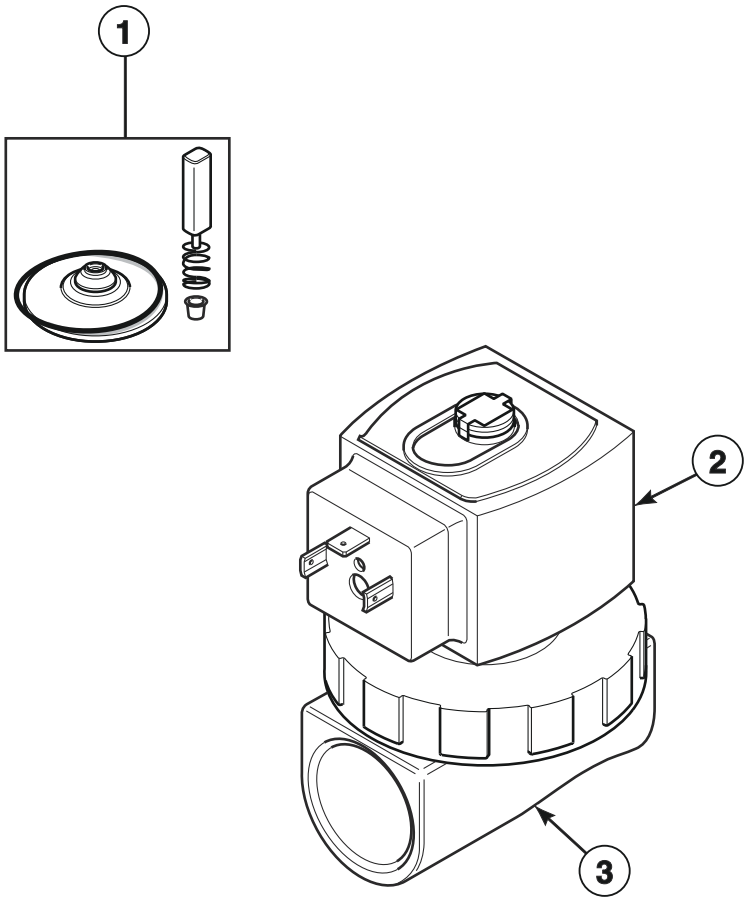

TMB3634P_70592001

© Copyright, Alliance Laundry Systems LLC – DO NOT COPY or TRANSMIT

Steam Valve

REF	PART NO.	DESCRIPTION	COMMENTS
	F8382301	DIN Valve Adapter KIt	
1	F8379502	Valve Rebuild Kit	
2	F8514601P	Coil	240 Volt
3	F8322906P	Valve	240 Volt

© Copyright, Alliance Laundry Systems LLC – DO NOT COPY or TRANSMIT

Electric Heater Components

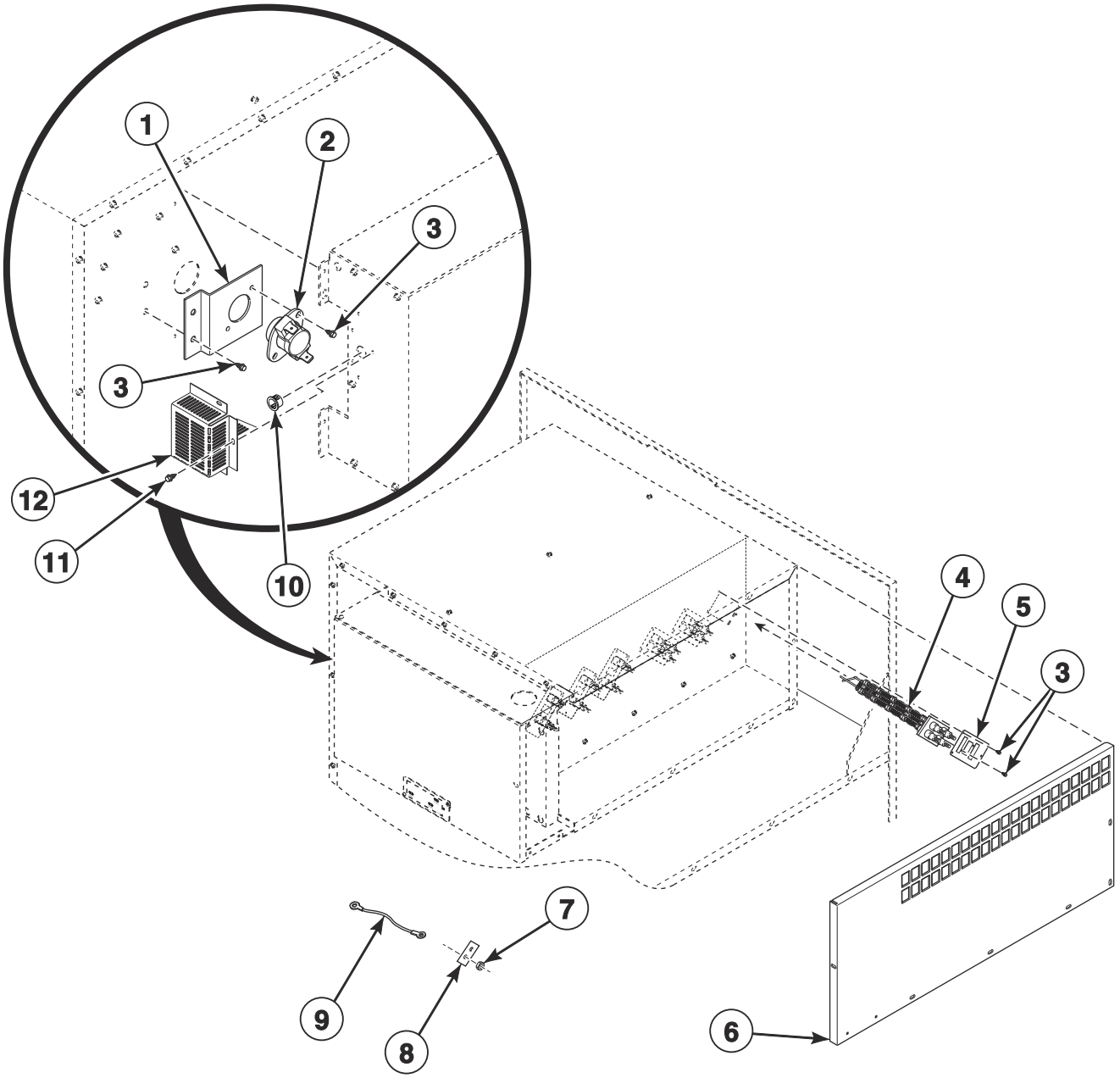

TMB3135P_70592001

© Copyright, Alliance Laundry Systems LLC – DO NOT COPY or TRANSMIT

Electric Heater Components

REF	PART NO.	DESCRIPTION	COMMENTS
	70564305	Stove Limit Harness	
1	44226101	Limit Offset Bracket	
2	44328004	Limit Thermostat	
3	430497	Screw	
4	M410939P	Heater Element	6 required; 10 kW; 240 Volt heater element for 230-240, 400-415 and 460-480 Volt
	M410941P	Heater Element	6 required; 10 kW; 220 Volt heater element for 380 and 440 Volt
5	44226001	Heater Element Sub-Plate	
6	44313101	Stove Cover	Left
7	70054	Nut	24 required
8	M400869	Jumper Strip	12 required for 230-240 volt; 6 required for 380-480 volt
9	44295412	Jumper Harness	8 required for 380 and 400-415 Volt; 4 required for 440-480 volt
	44295413	Jumper Harness	2 required for 440-480 Volt
10	44071501	Snap Bushing	
11	51780	Screw	
12	44318501	Stove Limit Cover	

© Copyright, Alliance Laundry Systems LLC – DO NOT COPY or TRANSMIT

Control Tray

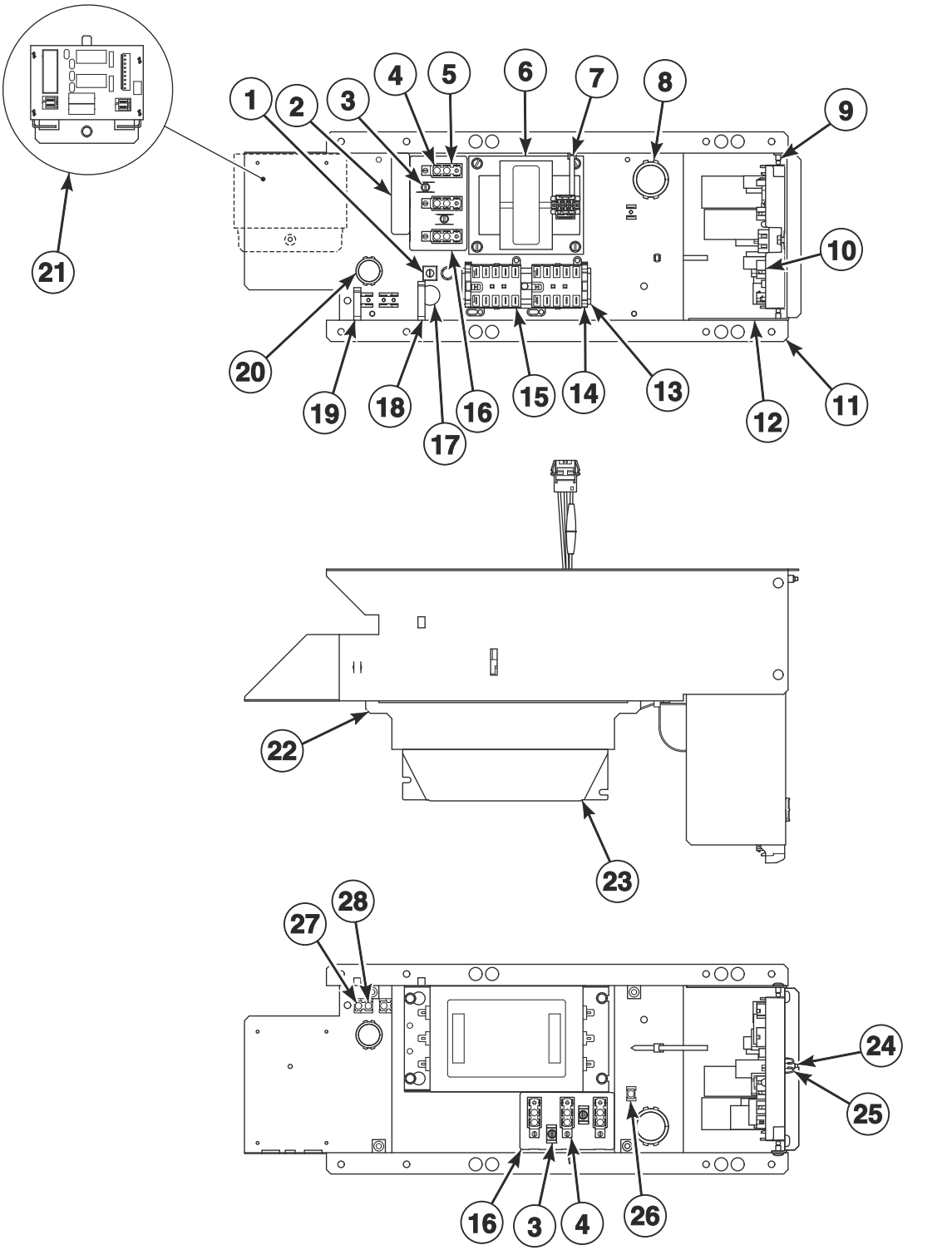

TMB3676P_70592001

© Copyright, Alliance Laundry Systems LLC – DO NOT COPY or TRANSMIT

Control Tray

REF	PART NO.	DESCRIPTION	COMMENTS
	685837	Screw	Use with item 1
	44088001	Nut	Use with item 1
	204454	Ferrite	Korean models; Applied to motor wires
	44272104	Emergency Stop Interconnect Harness	Routes from emergency stop to control tray
	44357403	EMI Filter Kit	CSA models; 200-240 Volt
	44357402	EMI Filter Kit	CSA models; 380-480 Volt
1	M411283	Ground Lug Connector	
2	44286803	Label	L1, L2, L3
3	51783	Screw	
4	430642	Terminal Block	
5	70333001	Terminal Block Shield	
6	F8491101	Transformer	380-480 Volt
7	70335601	Cable Tie	
8	70346501	Bushing	
9	70058501	Pop Rivet	
10	70671701	I/O Control Assembly	
11	70492401	Control Tray	
12	70494901	Control Board Control Tray	
13	M412690	DIN Rail	
14	F8449801	End Stop	
15	70482601	Contactor	2 required
16	M413862	Insulator	
17	D516100	Label	
18	F8449501	Wire Clip	
19	F8449502	Wire Clip	
20	70178701	Snap Bushing	
21	70501801	Steam Control Assembly	Steam models
22	70533101	Filter Bracket	
23	F8591801	EMI Filter	200-240 Volt
	F8637501	EMI Filter	IEC models; 380-480 Volt
24	F8206901	Screw	
25	70030501	Expansion Clip	
26	00621SG	Male Tab Terminal	
27	M400003	Pop Rivet	
28	00622SG	Terminal	

© Copyright, Alliance Laundry Systems LLC – DO NOT COPY or TRANSMIT

Accessory Box - Electric 200-240 Volt Models

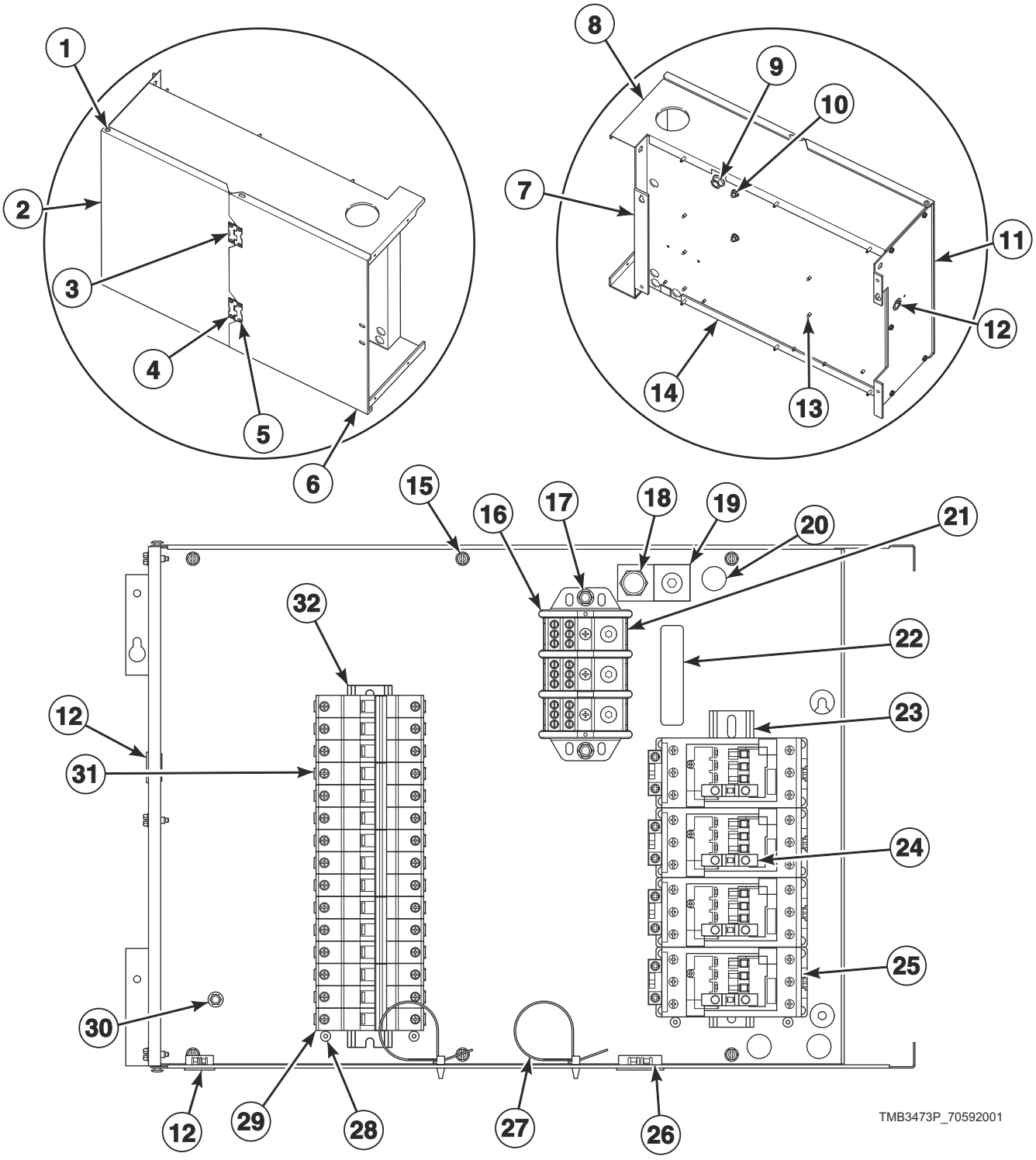

© Copyright, Alliance Laundry Systems LLC – DO NOT COPY or TRANSMIT

Accessory Box - Electric 200-240 Volt Models

REF	PART NO.	DESCRIPTION	COMMENTS
	44309007	Harness	CSA models; Power distribution block to control circuit breaker
	44309017	Harness	IEC models; Power distribution block to control circuit breaker
	44295407	Harness	Circuit breaker/contactor to contactor (1 per contactor)
	44295409	Harness	Contactor to element (Long)
	44295408	Harness	Contactor to element (Short)
	44295411	Harness	200-240 Volt; Contactor to element (Long)
	44295410	Harness	200-240 Volt; Contactor to element (Short)
	44295401	Harness	200-240 Volt; Power distribution block L1 to element circuit breaker
	44295402	Harness	200-240 Volt; Power distribution block L2 to element circuit breaker
	44295403	Harness	200-240 Volt; Power distribution block L3 to element circuit breaker
	44334314	Auxiliary Contact Harness	
1	70058502	Pop Rivet	
2	44288101	Control Box Front Cover Plate	Left
3	70220901	Damper Spacer	
4	D503676	Hinge	2 required
5	M405750	Pop Rivet	
6	44328401	Control Box Front Cover Plate	Right
7	44288001	Control Box Base Plate	
8	44287901	Control Box Top Plate	
9	70288801	Nut	
10	44087101	Nut	
11	44313001	Contactor Box Side	
12	M400770	Snap Bushing	2 required
13	70058501	Pop Rivet	
14	44288201	Control Box Bottom Plate	
15	F8206901	Screw	
16	44014902	Power Distribution Block Shield	
17	202175	Screw	
18	70244801	Screw	
19	44212301	Ground Lug Connector	
20	D516100	Label	
21	44211501	Power Distribution Block	
22	44286803	Label	
23	F8396501	DIN Rail	
24	44313201	Auxiliary Contact Block	4 required
25	70482801	Contactor	4 required
26	M402542	Snap Bushing	
27	70335601	Cable Tie	2 required
28	431264	Spacer	
	44251101	Pop Rivet	
29	70488101	Circuit Breaker	25 amp; 3 Phase
30	51780	Screw	
31	70488105	Circuit Breaker	4 required; 63 amp; 3 Phase
32	70512301	DIN Rail	

© Copyright, Alliance Laundry Systems LLC – DO NOT COPY or TRANSMIT

Accessory Box - Electric 380-480 Volt Models

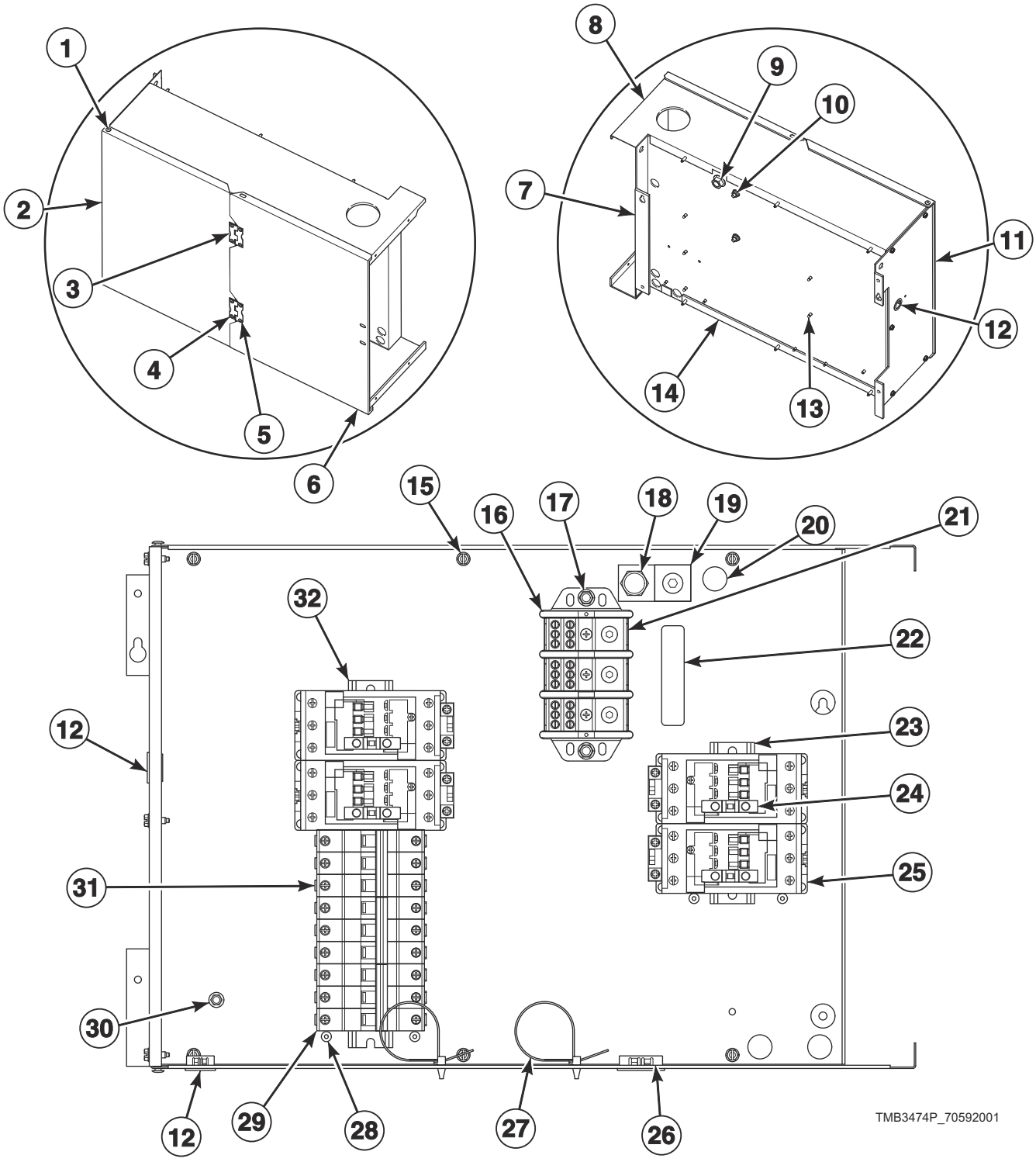

© Copyright, Alliance Laundry Systems LLC – DO NOT COPY or TRANSMIT

Accessory Box - Electric 380-480 Volt Models

REF	PART NO.	DESCRIPTION	COMMENTS
	44309007	Harness	CSA models; Power distribution block to control circuit breaker
	44309017	Harness	IEC models; Power distribution block to control circuit breaker
	44295407	Harness	Circuit breaker/contactor to contactor; 4 required
	44295409	Harness	Contactor to element (Long)
	44295408	Harness	Contactor to element (Short)
	44295404	Harness	380-480 Volt; Power distribution block L1 to element circuit breaker
	44295405	Harness	380-480 Volt; Power distribution block L2 to element circuit breaker
	44295406	Harness	380-480 Volt; Power distribution block L3 to element circuit breaker
	44334314	Auxiliary Contact Harness	200-240 Volt; Power distribution block L3 to element circuit breaker
1	70058502	Pop Rivet	
2	44288101	Control Box Front Cover Plate	Left
3	70220901	Damper Spacer	
4	D503676	Hinge	2 required
5	M405750	Pop Rivet	
6	44328401	Control Box Front Cover Plate	Right
7	44288001	Control Box Base Plate	
8	44287901	Control Box Top Plate	
9	70288801	Nut	
10	44087101	Nut	
11	44313001	Contactor Box Side	
12	M400770	Snap Bushing	2 required
13	70058501	Pop Rivet	
14	44288201	Control Box Bottom Plate	
15	F8206901	Screw	
16	44014902	Power Distribution Block Shield	
17	202175	Screw	
18	70244801	Screw	
19	44212301	Ground Lug Connector	
20	D516100	Label	
21	44211501	Power Distribution Block	
22	44286803	Label	
23	M412690	DIN Rail	
24	44313201	Auxiliary Contact Block	4 required
25	70482801	Contactor	4 required
26	M402542	Snap Bushing	
27	70335601	Cable Tie	2 required
28	431264	Spacer	
	44251101	Pop Rivet	
29	70488101	Circuit Breaker	25 amp; 3 Phase
30	51780	Screw	
31	70488105	Circuit Breaker	2 required; 63 amp; 3 Phase
32	70512301	DIN Rail	

© Copyright, Alliance Laundry Systems LLC – DO NOT COPY or TRANSMIT

Labels

PART NO.	DESCRIPTION	COMMENTS
44318601	Caution Label	Vent/install
F8614501	Danger Label	Shock; English/French
D516100	Label	Earth ground
F8614301	Hot Surface Warning Label	English/French
F8609001	Hot Surface Warning Label	Icon
F8611601	Warning Label	
44318600	Label Kit	Vent/install
F8614500	Label Kit	Shock
70534400	Label Kit	Fire
F8605500	Label Kit	
44321501	Notice Label	120/240 Volt
70539601	Notice Label	
D516073	Notice Label	Read instructions; Icon
70538401	Pinch Warning Label	English/French
F8615701	Pinch Warning Label	Icon
F8615702	Pinch Warning Label	Icon
F8614202	Shock Warning Label	Icon
70536401	Warning Label	Lint; Australian models
44324101	Warning Label	Fire; Australian models
70534405	Warning Label	Fire; Colombian Spanish; Australian models
70534401	Warning Label	Fire; English; Australian models
70534402	Warning Label	Fire; French; Australian models
44321601	Warning Label	Risk of fire; Icon
44324001	Warning Label	Shock/pinch
44324002	Warning Label	Shock/pinch

© Copyright, Alliance Laundry Systems LLC – DO NOT COPY or TRANSMIT

Harnesses

PART NO.	DESCRIPTION	COMMENTS
44334311	Coil Jumper Harness	Electric models
44334310	Auxiliary Contact Jumper Harness	Electric models
44316008	Harness	3 Phase; Auxiliary power distribution block to EMI filter
44334309	Contactor Coil Harness	Electric models
44334305	Control Power Harness	Electric models
44356405	Control Tray Harness Assembly	Steam models
44356406	Control Tray Harness Assembly	Gas models
44356409	Control Tray Harness Assembly	Electric models
44334702	Inverter Contactor Coil Harness	Secondary
44334312	Coil Jumper Harness	Electric models
44334313	Coil Jumper Harness	Electric models
44316002	Harness	3 Phase; Main power distribution block to EMI filter
44280012	Motor Contactor Power Harness	3 Phase; EMI
44280003	Motor Contactor Power Harness	3 Phase
44280101	Power Harness	380-480 Volt
44272101	Power Harness	200-240 Volt

© Copyright, Alliance Laundry Systems LLC – DO NOT COPY or TRANSMIT

Notes

© Copyright, Alliance Laundry Systems LLC – DO NOT COPY or TRANSMIT

Parts Index

A

Access Panel Trim
70399403 27

Adapter
44178803 53

Airflow Switch and Arm Bracket
70319602 51

Airflow Switch Arm
70319401 51

Airflow Switch Kit
70429601P 51

Airflow Switch Vane
70319201 51

Auxiliary Contact Block
44313201 ..... 65, 67

Auxiliary Contact Harness
44334314 ..... 65, 67

Auxiliary Contact Jumper Harness
44334310 69

B

Ball Bearing
44041901P 47

Base Pan
M409911 37

Base Support
44319401 37
44319501 37

Bearing
M413923P 47

Bearing Mounting
44301701 43

Belt Guard
44277301 39
44277401 39
44277801 39
44277802 39
44313701 39
44313801 39

Blower Assembly
44267201 49

Blower Housing Scroll
44307301 37
444307301 49

Blower Housing Side Panel
44327701 37

Blower Inlet Cone
44266902 37

Blower Motor Mounting Plate
44311301 49

Bolt
H88301411 41
M400650 47
203798 35
44017901 35

Burner
M412025P 53

Burner Hole Cover
44315101 53

Burner Orifice
70684111 55
70684113 55
70684114 55
70684115 55
70684116 55
70684118 55
70684119 55
70684122 55
70684137 55
70684140 55
70684142 55
70684144 55
70684147 55

Bushing
F280409P 47
M413021 53
M414459 57
70346501 63

C

Cable Tie
M405829 53
70335601 ..... 63, 65, 67

Caution Label
44318601 68
44324201 53

Center Hinge Lug Assembly
70640401 33

Circuit Breaker
70488101 ..... 65, 67
70488105 ..... 65, 67

Circuit Plug Housing, 1
44370401 45

Clevis Pin
44091501 57

Coil
F8514601P 59

Coil Jumper Harness
44334311 69
44334312 69
44334313 69

Cold Weather Kit
44340301 23

Contact Base
F8538101 ..... 15, 19, 21

Contact Switch
F8069501 ..... 15, 19, 21

Contactor
70482601 63
70482801 ..... 65, 67

Contactor Box Side
44313001 ..... 65, 67

Contactor Coil Harness
44334309 69

Control
70511601 23

N/A items do not appear in index.

© Copyright, Alliance Laundry Systems LLC – DO NOT COPY or TRANSMIT

Control Assembly
70478804P 19
70478904P 19
70479801 15
70479901 15
70523004P 19
70523101 15
70543104 21
Control Board Control Tray
70494901 63
Control Box Base
44065301 23
Control Box Base Plate
44288001 ..... 65, 67
Control Box Bottom Plate
44288201 ..... 65, 67
Control Box Cover
44065201 23
Control Box Front Cover Plate
44288101 ..... 65, 67
44328401 ..... 65, 67
Control Box Housing
44306701 23
Control Box Top
44307101 23
Control Box Top Plate
44287901 ..... 65, 67
Control Bracket
44331005 ..... 15, 19
44331006B 15, 19
44331006DG 15, 19
44331006LG 15, 19, 21
44331006W 15, 19, 21
Control Cover
44330801B 13, 17
44330801* 13, 17, 21
44330802 ..... 13, 17, 21
44330803LG 13, 17, 21
44330804* 13, 17
44330805 ..... 13, 17
44330806DG 13, 17
44330810B 13, 17
44330810* 13, 17, 21
44330811 ..... 13, 17, 21
44330812LG 13, 17, 21
44330813* 13, 17
44330814 ..... 13, 17
44330815DG 13, 17
Control Harness
44334404 23
Control Power Harness
44334305 69
Control Tray
70492401 63
Control Tray Cover
70507501 39
Control Tray Harness Assembly
44334506 69
44356405 69
44356409 69
Control Trim
44016401 ..... 13, 17
44016403 ..... 13, 17
Cylinder and Trunnion Assembly
44054801 41
44054802 41
44194101 41
44194102 41
Cylinder Assembly
H96427513 41
M409788 41
44193301 41
44193302 41
Cylinder Rib
44158101 41
44158102 41
Cylinder Rib Assembly
44191203 41
Cylinder Shroud
44286401 37
44286501 37
44286601 37
44286701 37

D

Damper
H96387519 57
Damper Assembly
44280303 ..... 37, 49
Damper Motor
44308101 57
Damper Motor Cover
44327401 57
Damper Motor Harness
44273606 57
Damper Motor Plate
44327501 57
Damper Shaft
H96388079 57
Damper Spacer
70220901 ..... 65, 67
Danger Label
F8614501 68
DIN Rail
F8396501 65
M412690 ..... 63, 67
70512301 ..... 65, 67
DIN Valve Adapter Kit
F8382301 59
Door Assembly
44028906P 29
44028907P 29
44058105P 29
44266701P 29
44292302B 29
44292302LGP 29
44354701 29
44354703 29
44354705 29
70407402P 29
Door Catch Kit
70482901 25
Door Glass
44008401P 29
44008402P 29
Door Glass Installation Tool
M4221P4 29
Door Glass Label
70650401 29

N/A items do not appear in index.

© Copyright, Alliance Laundry Systems LLC – DO NOT COPY or TRANSMIT

70707701 29
Door Handle
44007901 29
44263801 29
44370601 29
70521102 29
Door Hinge
44075207B 31
Door Hinge Assembly
44075201* 31
44075207LG 31
44075210 31
44366602LG 33
44366604 33
44366608 33
Door Hinge Lug Assembly
44035001 31
44035002 31
Door HingecAssembly
44366606W 33
Door Latch
M401223 25
Door Ring and Handle Assembly
44326007B 29
44326007LG 29
Door Ring Assembly
44326001 29
44326002 29
44326003B 29
44326004B 29
Door Ring Gasket
44008201P 29
70296802 29
Door Seal Kit
70211902P 29
Door Switch Actuator Kit
70215001P 31
Door Switch Cover
44316301 25
Door Switch Harness
44335203 25
Door Switch Shield
44316601 25
Door Switch Wire Channel
44286001 25
Drive Chain
H96388186 57
Drive Motor
44259701P 47
44259801P 47
Drive Rivet
M400713 23
Drive Wheel
H96388178 57

E

Emergency Stop Harness
44272401 ..... 15, 19, 21
Emergency Stop Interconnect Harness
44272104 63
Emergency Stop Label
44012901 ..... 15, 19, 21
Emergency Stop Pushbutton
F200233500 ..... 15, 19, 21
EMI Filter
F8591801 63
F8637501 63
EMI Filter Kit
44357402 63
44357403 63
End Stop
F8449801 63
Exhaust Deflector
44307401 ..... 37, 49
Expansion Clip
70030501 ..... 13, 17, 21, 63
Extension Spring
F8440701 47

F

Fan Motor
44259301P 49
44259401P 49
FCC-IC Label
F8613201 21
Felt Pad
M402144 37
Ferrite
204454 ..... 47, 49, 63
Fill Hose
202799 23
202800 23
Filter
44172201 57
Filter Bracket
70533101 63
Filter Channel
H96388087 57
Filter Mounting Plate
70551701 23
Flange Bearing
44048301P 43
Front Access Panel
44012609B 27
44012609DG 27
44012609LG 27
44012609W 27
44012612 27
44367201 27
44367202W 27
Front Control Box
44311101 11
Front Panel
44292002 25
44292003DG 25
44292003LG 25
44292003W 25
44368401W 25
44368403 25

N/A items do not appear in index.

© Copyright, Alliance Laundry Systems LLC – DO NOT COPY or TRANSMIT

G

Gas Stove Assembly
44248801 53

Gas Valve
44166701 53
44316801 53
44316802 53

Gas Valve Bracket
44245701 53

Gas Valve Harness
44273501 53
44273502 53

Gasket
44333401 53

Ground Lug Connector
M411283 63
44212301 ..... 65, 67

H

Hairpin Cotter
44091601 57

Handle and Caps Assembly
44049901 35
70154416 35

Handle Bar
70399501B 29

Handle Bumper
70407203 35
70407211 35

Harness
F8617901 21
44295401 65
44295402 65
44295403 65
44295404 67
44295405 67
44295406 67
44295407 ..... 65, 67
44295408 ..... 65, 67
44295409 ..... 65, 67
44295410 65
44295411 65
44309007 ..... 65, 67
44309017 ..... 65, 67
44316002 69
44316008 69

Harness Adapter Plate
70523301 57

Heater Element
M410939P 61
M410941P 61

Heater Element Sub-Plate
44226001 61

High Altitude Orifice Kit
44357507 55
44357508 55

High Voltage Suppression Cable
44239704 53

Hinge
D503676 ..... 65, 67

Hinge Cam Kit
M4772P3 31
M4773P3 31

Hose
44073305 23

Hose Clamp
20391 53
36801 23

Hose Fitting
44069101 23

Hot Surface Warning Label
F8609001 68
F8614301 68

I

ICM Harness
44334603 53

Idler Shaft
44303101 47

Igniter Cover
70159601 53

Ignition Control
70482001 53
70482002P 53

Insulator
M413862 63

Interconnect Harness
44334401 23

Inverter Contactor Coil Harness
44334702 69

Inverter Motor Harness
44335306 47
44335307 49

I/O Control Assembly
70671701 63

J

J-Belt
44293702 47

Jumper Harness
44295412 61
44295413 61

Jumper Strip
M400869 61

K

Key
M400008 47
M405232 47
70155601 23

Kickplate
70117609 35
70117620 35

N/A items do not appear in index.

© Copyright, Alliance Laundry Systems LLC – DO NOT COPY or TRANSMIT

L

Label
- D503887 53
- D516100 ..... 63, 65, 67, 68
- 44190901 25
- 44286803 ..... 63, 65, 67
- 44318201 23
- 70414001 29
- 70472801 25
- 70537001 25
- 70537101 25

Label Kit
- F8605500 68
- F8614500 68
- 44318200 23
- 44318600 68
- 44324500 23
- 70534400 68

Light
- 801432 23

Limit Offset Bracket
- 44226101 61

Limit Thermostat
- 44328002 49
- 44328004 61
- 44328105 53
- 70530905 49

Lint Hood
- 44286101 37

Lint Panel
- 44012203LG 35
- 44012203WP 35
- 44012204DG 35
- 44012204LG 35
- 44012206 35
- 44012207 35
- 44012208W 35

Lint Panel Clip
- 44017801 35

Lint Screen
- 44063602 37

Lint Screen Clip
- H96418413 37

Lint Screen Support
- 44286201 37
- 44286202 37
- 44307501 37

Lock, Key and Nut Kit
- 70733701 23

Lower Hinge Gusset
- 70632002 33

Lower Lug Assembly
- 70639302 33

L.P. Conversion Kit
- 44328804 53
- 44330303 53

M

Machine ID Control Assembly
- 203361P 17, 21

Magnet
- 70343101 35

Main Harness
- 44334202 11

Male Tab Terminal
- 00621SG 63

Manifold
- 44079601 23
- 44079602 23

Master Link
- H96382072P 57

Max Fill Line Label
- 70707501 29

Micro V Pulley
- 44302901 47

Mixing Valve
- 70519801 23

Mixing Valve Shield Bracket
- 44306601 23

Moisture Sensing Harness Kit
- 44344703 45

Moisture Sensor Harness
- 44333903 45

Motor Conduit Bracket
- 44317901 ..... 47, 49

Motor Contactor Power Harness
- 44280003 69
- 44280012 69

Motor Pivot Brace
- 44310701 47

Motor Pivot Bracket Weldment
- 44310601 47

Motor Pivot Plate Weldment
- 44311501 47

Motor Pulley
- 44267602 47

Mounting Bracket
- 44331101 21

Mounting Plate
- 44288401 35
- 44330901 ..... 15, 19, 21

N

Nameplate
- F8443107 27
- F8688001 27
- F8688901 27
- 44010601 27
- 567887 27
- 70472001 27

Nameplate Overlay
- 44130401 27
- 70410201 27

Nipple
- H851016088 53

Notice Label
- D516073 68
- 44321501 68
- 70535901 53
- 70539601 68
- 70544901 53

N/A items do not appear in index.

© Copyright, Alliance Laundry Systems LLC – DO NOT COPY or TRANSMIT

Nut
F8387701 43
H88412101 41
M400022 49
M400026 47
M400033 ..... 45, 47
M400977 ..... 13, 17, 21
M412334 41
M414215 29
20274 43
23951 57
29786 57
29787 25
44087101 ..... 35, 65, 67
44088001 ..... 29, 31, 33, 35, 37, 63
70030401 ..... 25, 27
70054 61
70142 57
70288801 ..... 65, 67

O

Overlay
70516801 13
70517801 13
70519001 13
70539101 13
70545501 13
70547501 13
70547801 17
70548801 17
70570601 17
70570801 17
70571401 17
70571601 17
70572401 17
70595401 21
70636401 17
70636501 13
70636801 13
70638301 17
70638801 13
70638901 17
70639001 21

P

Panel Locator
56079 39
Pinch Warning Label
F8615701 68
F8615702 68
70538401 68
Pipe Bracket
44249301 53
Pipe Cap
44087801 53
Pipe Elbow
44249401 53
Pipe Nipple
44249501 53
44252301 53
44252401 53
Pipe Tee
44174201 53
Pipe Union
M411419 53
Plug
M400985 ..... 15, 19, 21
Pop Rivet
M400003 63
M405750 67
430725 ..... 15, 19, 21, 35
44166601 25
44251101 67
70058501 ..... 31, 33, 63, 65, 67
70058502 ..... 65, 67
70126301 35
70126401 35
70412601 29
Porcelain Touch-Up Paint
122P4P 25
370P4P 25
Power Distribution Block
44211501 ..... 65, 67
Power Distribution Block Shield
44014902 ..... 65, 67
Power Harness
44272101 69
44280101 69
Power Sensor Harness
44334408 23
Pressure Fitting
44231601 53
Pulley
44289502 47
44289601 47
Push-to-Start Switch
801434W 23

R

Rear Lint Panel
44285501 37
Rear Panel
44276601 ..... 37, 39
Rear Panel Brace
44310401 39
Rear Panel Support
44277001 39
44285401 37
44285402 37
44300401 39
44300402 39
44310301 39
44310302 39
Reducer
44342901 53
Reed Switch Assembly
F8066804 35
Rib Wire
44208101 45
Rivet
M405750 65
44251101 65
70743501 35
Roll Pin
H88970256 57

N/A items do not appear in index.

© Copyright, Alliance Laundry Systems LLC – DO NOT COPY or TRANSMIT

Roller Catch
H87020202 35
Roller Catch Mounting Bracket
44014001 35

S

Screw
D501086 ..... 35, 57
F8206901 ..... 63, 65, 67
H88010574 57
H88012034 43
M400063 47
M400661 29
M402574 25
M405188 57
M411165 43
02422 57
202175 ..... 65, 67
38272 53
430497 ..... 11, 21, 23, 51, 53, 61
430757 ..... 35, 51
431287 ..... 25, 37
44338901 45
44349101 ..... 31, 33
51780 ..... 23, 37, 53, 61, 65, 67
51782 53
51783 ..... 53, 63
61199 57
685837 63
70033502 31
70182601 ..... 25, 27
70187201 47
70244801 ..... 65, 67
70275801 39
70409801 31
70442101 ..... 29, 31, 35, 37, 45
70640201 33
70640301 33
800462 43
800930 ..... 13, 17, 21
802822 33
804608 ..... 13, 17, 21, 23
808210 57
Sensor Harness
44334407 23
Shaft Actuator Assembly
44332701 57
Shaft Collar
M414451 57
Shield
44326801 23
Shock Warning Label
F8614201 23
F8614202 68
F8614401 23
Slip Ring Assembly
44222702 45
Snap Bushing
M400770 ..... 53, 65, 67
M402542 ..... 65, 67
M411826 57
44071501 61
70178701 63
Spacer
M401402 ..... 41, 43
431264 ..... 65, 67
Spark Electrode
44328701P 53
Spray Paint
298P4P 25
Spring Pin
H88900683 57
Spud Holder Weldment
44390001 53
Steam Adapter Kit
44314801 57
Steam Coil
H96382023P 57
44256401 57
Steam Coil Filter
H96382106 57
Steam Coil Support
M411550 57
Steam Control Assembly
70501801 63
Steam Cover
44115101 57
Steam Damper Actuator
44096401 57
Steam Damper Counterweight
44332601 57
Steam Damper Link
44333001 57
Steam Filter Top Hinge Assembly
44088101 57
Steam Heater Assembly
44317301 57
44317501 57
Steam Valve Harness
F8520703 57
Stove Cover
44313101 61
Stove Limit Bypass Harness
70564302 57
Stove Limit Cover
44318501 61
Stove Limit Harness
70564304 53
70564305 61
Stove Limit Harness Bracket
431078 53
Support Bracket
44310901 23
Support Shelf
44312601 37
44312602 37
Switch
44312401 25
70411901 51
Switch Bracket
44296301 35
70356301 51

T

Terminal
00622SG 63

N/A items do not appear in index.

© Copyright, Alliance Laundry Systems LLC – DO NOT COPY or TRANSMIT

Terminal Block
430642 63
Terminal Block Shield
70333001 63
Thermistor
M414704 49
44064701 37
Thermistor Plate
44068101 37
44068102 37
Thermostat Cover
M414477 53
Thermostat Opening Cover
44312501 53
Top Access Panel
44028201DG 37
Top Access Panel Gusset
44028201LG 37
44028201* 37
44028202DG 37
44028202LG 37
44028202* 37
Top Deflector
44285601 37
Transformer
F8491101 63
Trunnion Assembly
44055501 41
44055502 41
44375001P 47
Trunnion Housing
M413826 47

U

Upper Hinge Gusset
44376501 33
Upper Hinge/Wire Cover Bracket
44368701 25
Upper Lug Assembly
70639301 33
USB IR Interface Kit
203346 21
USB-Serial Interface Assembly
203440 21

V

Valve
F8322906P 59
Valve Rebuild Kit
F8379502 59
V-Belt
44309401 47
Vent Collar
H96372164 37

W

Warning68
Warning Label
44321601 68
44324001 68
44324002 68
44324101 68
44324501 23
44324502 23
70534401 68
70534402 68
70534405 68
70536401 68
Washer
F431125 35
M400013 57
M400080 35
M400991 49
03815 ..... 13, 17, 21
20103 47
44238902 45
70261401 ..... 41, 43, 47
70409301 29
800465 ..... 25, 27, 57
Water Valve Harness
44334405 23
Wire Clip
F8449501 63
F8449502 63
Wireless Network Board Harness
F8536002 21
Wireless Network Control Assembly
203532 11
Wireless Network Kit
70596301 ..... 11, 21
Wireway Channel
44239001 45

N/A items do not appear in index.

© Copyright, Alliance Laundry Systems LLC – DO NOT COPY or TRANSMIT