Tumble Dryer

170 Pound Capacity

18 Digit Model Numbers with 3 and 5 in 13th Position

Refer to Page 3 for Model Numbers

Parts

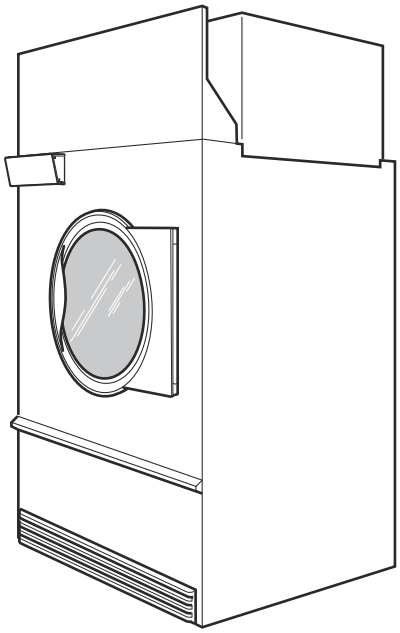

TMB1282C_70592101

Alliance™ Laundry Systems

www.alliancelaundry.com

Part No. 70592101R13
October 2025

Table of Contents

Title	Page
Parts Ordering Information	2
Serial Plate Location	2
Machine Identification	3
Product Overview - Heat Source and Voltage	4
Product Overview - FN Control Suffix	6
Product Overview - DN and NN Control Suffixes	8
Interior Control Box	10
Dual Digital Control - F in the 7th Position (Drawing 1 of 2)	12
Dual Digital Control - F in the 7th Position (Drawing 2 of 2)	14
Electronic Display Control - N in the 7th Position (Drawing 1 of 2)	16
Electronic Display Control - N in the 7th Position (Drawing 2 of 2)	18
3.5 Inch Graphical Control - D in the 7th Position	20
Fire Suppression System Control Box	22
Front Panel Components	24
Access Panel and Nameplates	26
Door Components	28
Hinge Components - Design 3 Models	30
Hinge Components - Design 5 Models	32
Lint Panel Components	34
Cabinet and Frame Assembly	36
Rear Panel Components	38
Cylinder and Trunnion Assembly	40
Trunnion Bearings	42
Moisture Sensing Components	44
Cylinder Motor Components	46
Blower and Exhaust Components	48
Airflow Switch	50
Gas Heater Components - Models with 2nd Digit A, G, H, J, K, R, and T	52
Gas Heater Components - Models with 2nd Digit U	54
Burner Orifices	56
Steam Heater Components	58
Steam Valve	60
Control Tray	62
Labels	64
Harnesses	65
Parts Index	67

© Copyright 2025, Alliance Laundry Systems LLC

All rights reserved. No part of the contents of this book may be reproduced or transmitted in any form or by any means without the expressed written consent of the publisher.

Parts Ordering Information

If literature or replacement parts are required, contact the source from whom the machine was purchased or contact Alliance Laundry Systems at (920) 748-3950 for the name and address of the nearest authorized parts distributor.

For technical assistance, call the number listed below:

(920) 748-3121 Ripon, Wisconsin

Serial Plate Location

When calling or writing about your product, be sure to mention model and serial numbers. Model and serial numbers are located on serial plate(s) as shown.

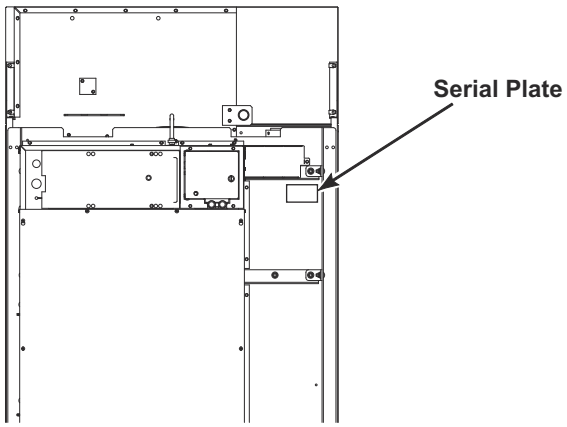

TMB3615P_70592101

© Copyright, Alliance Laundry Systems LLC – DO NOT COPY or TRANSMIT

Machine Identification

Information in this manual is applicable to these machines:

BA170L
BA170N
BA170S
BG170L
BG170N
BG170S
BH170L
BH170N
BH170S
BJ170L
BJ170N
BJ170S
BK170L
BK170N
BR170S
BU170L
BU170N
BU170S
GA170L
GA170N
GA170S
GG170L
GG170N
GG170S
GH170L
GH170N
GH170S
GJ170L
GJ170N
GJ170S
GK170L
GK170N
GU170L
GU170N
GU170S
HA170L
HA170N
HA170S
HG170L
HG170N
HG170S
HH170L
HH170N
HH170S
HJ170L
HJ170N
HJ170S
HK170L
HK170N
HR170S
HT170C
HT170L
HT170N
HT170S
HU170L
HU170N
HU170S
KT170L
KT170N
KT170S
NA170L
NA170N
NA170S
NG170L
NG170N
NG170S
NH170L
NH170N
NH170S
NJ170L
NJ170N
NJ170S
NK170L
NK170N
NR170S
NT170L
NT170N
NT170S
NU170L
NU170N
NU170S
PA170L
PA170N
PA170S
PG170L
PG170N
PG170S
PH170L
PH170N
PH170S
PJ170L
PJ170N
PJ170S
PK170L
PK170N
PR170S
PT170C
PT170L
PT170N
PT170S
PU170L
PU170N
PU170S
SA170L
SA170N
SA170S
SG170L
SG170N
SG170S
SH170L
SH170N
SH170S
SJ170L
SJ170N
SJ170S
SK170L
SK170N
SR170S
ST170C
ST170L
ST170N
ST170S
SU170L
SU170N
SU170S
UA170L
UA170N
UA170S
UG170L
UG170N
UG170S
UH170L
UH170N
UH170S
UJ170L
UJ170N
UJ170S
UK170L
UK170N
UR170S
UT170C
UT170L
UT170N
UT170S
UU170L
UU170N
UU170S

© Copyright, Alliance Laundry Systems LLC – DO NOT COPY or TRANSMIT

Product Overview - Heat Source and Voltage

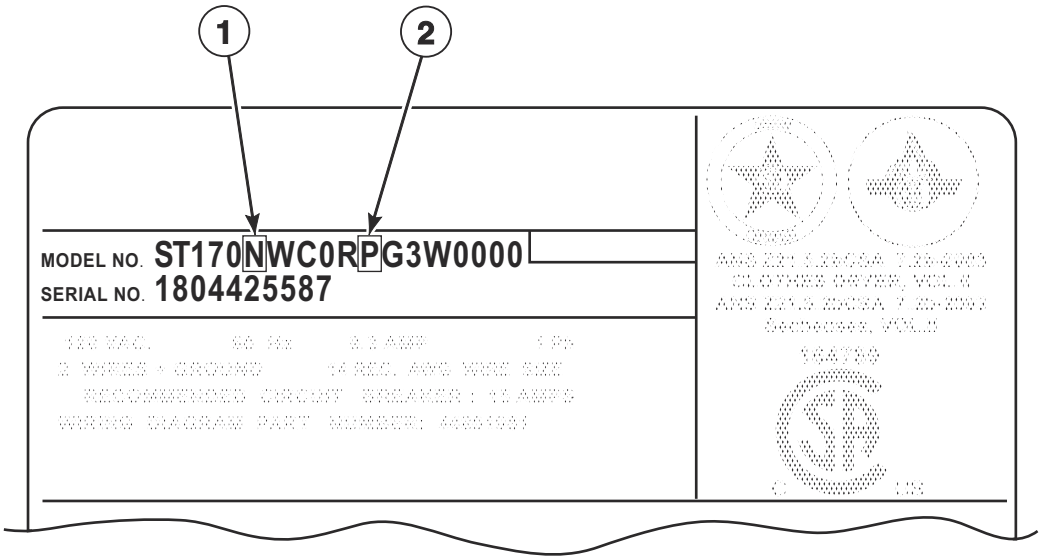

TMB3659P_70592101

© Copyright, Alliance Laundry Systems LLC – DO NOT COPY or TRANSMIT

Product Overview - Heat Source and Voltage

REF	PART NO.	DESCRIPTION	COMMENTS
1	-	Heat Source	C: Steam (CRN) L: Liquid Petroleum Gas (L.P.) N: Natural Gas (N.G.) S: Steam
2	-	Voltage	N: 440-480 Volt/50-60 Hertz/3 Phase P: 380-415 Volt/50-60 Hertz/3 Phase Q: 200-240 Volt/50-60 Hertz/3Phase

© Copyright, Alliance Laundry Systems LLC – DO NOT COPY or TRANSMIT

Product Overview - FN Control Suffix

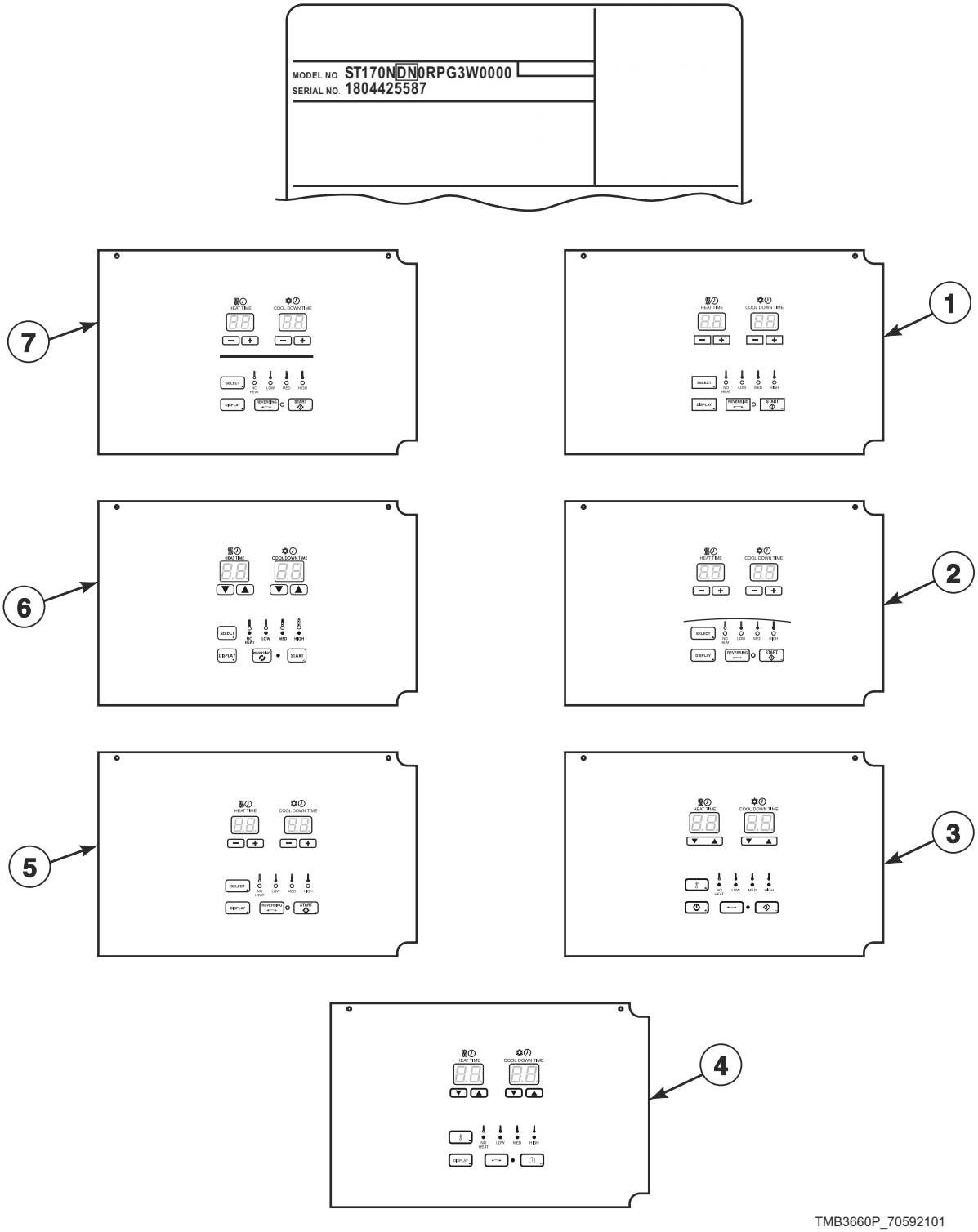

TMB3660P_70592101

© Copyright, Alliance Laundry Systems LLC – DO NOT COPY or TRANSMIT

Product Overview - FN Control Suffix

REF	PART NO.	DESCRIPTION	COMMENTS
1	-	Dual Digital Control	H models
2	-	Dual Digital Control	U models
3	-	Dual Digital Control	B models
4	-	Dual Digital Control	P models
5	-	Dual Digital Control	N models
6	-	Dual Digital Control	G and K models
7	-	Dual Digital Control	S models

© Copyright, Alliance Laundry Systems LLC – DO NOT COPY or TRANSMIT

Product Overview - DN and NN Control Suffixes

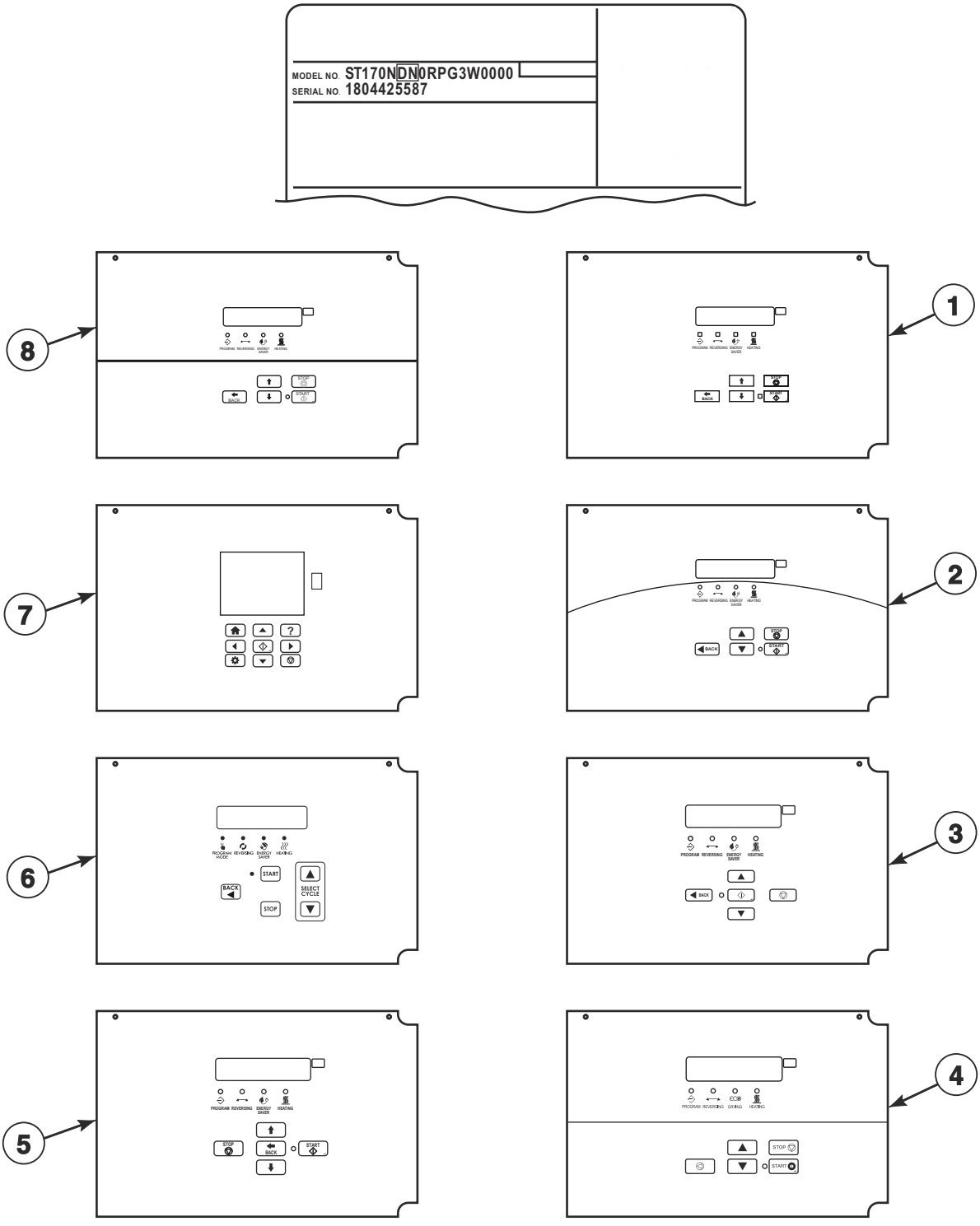

TMB3661P_70592101

© Copyright, Alliance Laundry Systems LLC – DO NOT COPY or TRANSMIT

Product Overview - DN and NN Control Suffixes

REF	PART NO.	DESCRIPTION	COMMENTS
1	-	Galaxy Control	H models
2	-	M-Series Control	U models
3	-	OPTimum Control	B models
4	-	OPL Micro Control	P models
5	-	OPL Micro Control	N models
6	-	OPL Micro Control	G and K models
7	-	UniLinc Control	U models
8	-	Quantum Gold Control	S models

© Copyright, Alliance Laundry Systems LLC – DO NOT COPY or TRANSMIT

Interior Control Box

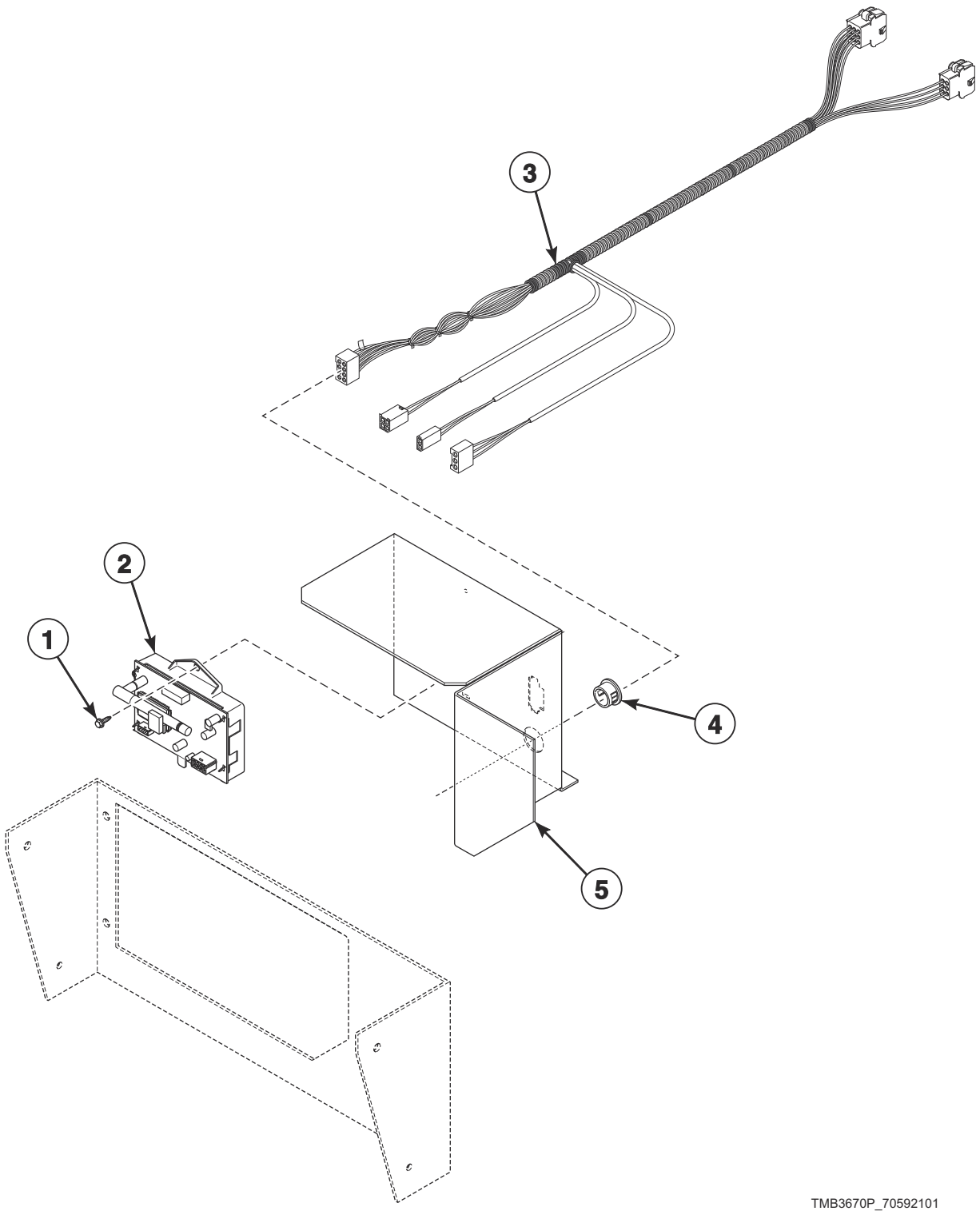

TMB3670P_70592101

© Copyright, Alliance Laundry Systems LLC – DO NOT COPY or TRANSMIT

Interior Control Box

REF	PART NO.	DESCRIPTION	COMMENTS
	70596301	Wireless Network Kit	D in the 7th position of model number
1	430497	Screw	
2	203532	Wireless Network Control Assembly	
3	44334202	Main Harness	
4	70178701	Snap Bushing	
5	44311101	Front Control Box	

© Copyright, Alliance Laundry Systems LLC – DO NOT COPY or TRANSMIT

Dual Digital Control - F in the 7th Position (Drawing 1 of 2)

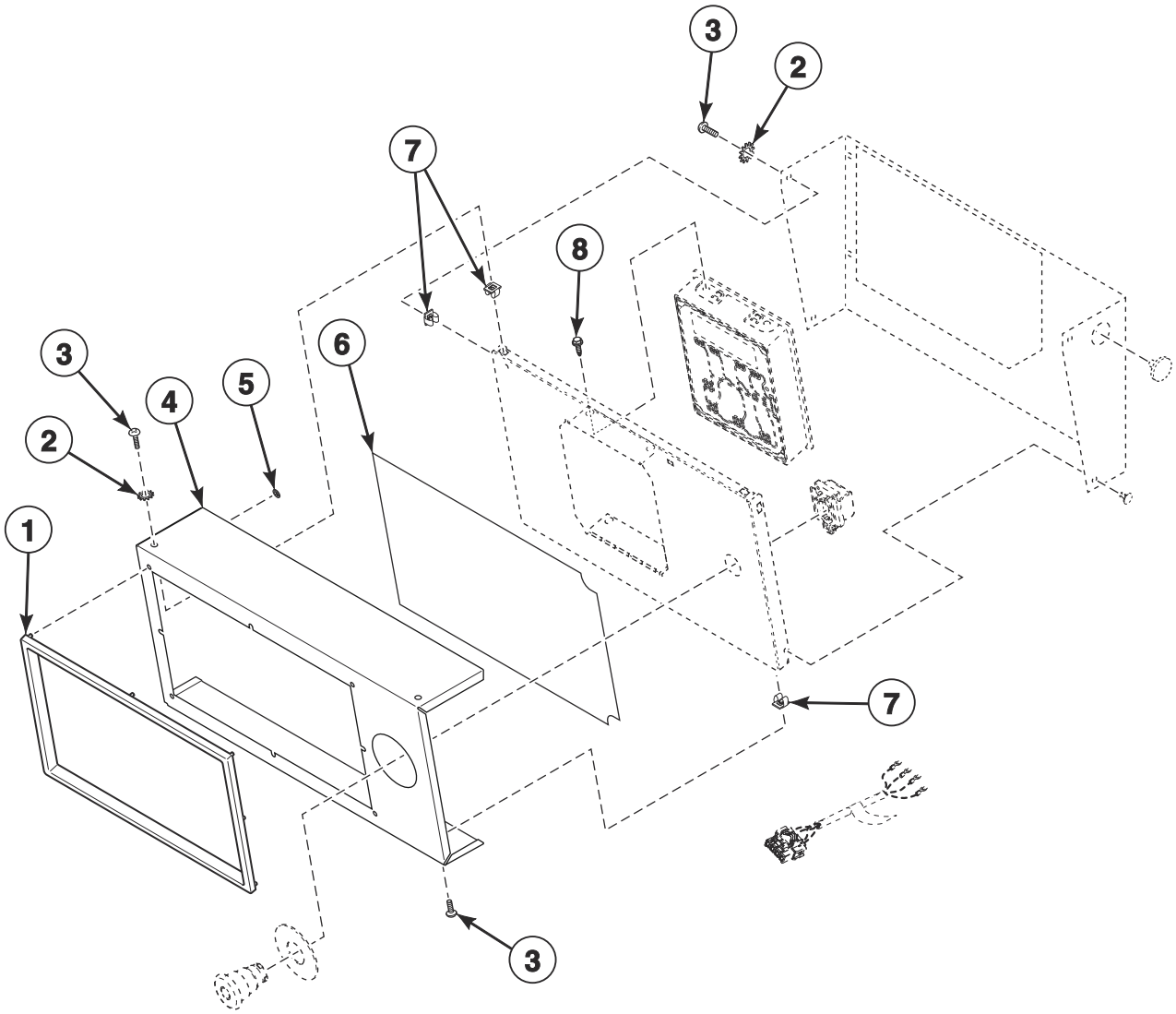

TMB3619P_70592101

© Copyright, Alliance Laundry Systems LLC – DO NOT COPY or TRANSMIT

Dual Digital Control - F in the 7th Position (Drawing 1 of 2)

REF	PART NO.	DESCRIPTION	COMMENTS
1	44016403	Control Trim	H models; Gray
	44016401	Control Trim	P and S models; Black
2	03815	Washer	
3	800930	Screw	
4	44330802	Control Cover	IEC B, P and U models; CSA B, P and U models through 12/31/18; Stainless steel; No trim
	44330805	Control Cover	IEC H, P and S models; CSA H, P and S models through 12/31/18; Stainless steel
	44330801*	Control Cover	IEC B and U models; CSA B and U models through 12/31/18
	44330806DG	Control Cover	IEC P models; CSA P models through 12/31/18; Dark gray
	44330804*	Control Cover	IEC H, N, P and S models; CSA H, N, P and S models through 12/31/18
	44330801B	Control Cover	IEC G and K models; CSA G and K models through 12/31/18; Black
	44330803LG	Control Cover	IEC U models; CSA U models through 12/31/18; Light gray
	44330811	Control Cover	CSA B, P and U models starting 1/1/19; Stainless steel; No trim; Design 3
	44330814	Control Cover	CSA H, P and S models starting 1/1/19; Stainless steel
	44330810*	Control Cover	CSA B and U models starting 1/1/19
	44330815DG	Control Cover	CSA P models starting 1/1/19; Dark gray
	44330813*	Control Cover	CSA H, N, P and S models starting 1/1/19
	44330810B	Control Cover	CSA G and K models starting 1/1/19; Black
	44330812LG	Control Cover	CSA U models starting 1/1/19; Light gray
5	M400977	Nut	8 required
6	70539101	Overlay	B models; Reversing
	70547501	Overlay	G and K models; Reversing
	70517801	Overlay	H models; Reversing; Design 3
	70636501	Overlay	H models; Reversing; Design 5
	70545501	Overlay	P models; Reversing
	70516801	Overlay	N models; Design 3 S models; Reversing
	70636801	Overlay	S models; Reversing; Design 5
	70519001	Overlay	U models; Reversing; Design 3
	70638801	Overlay	U models; Reversing; Design 5
7	70030501	Expansion Clip	
8	804608	Screw	4 required

*** Add Letter To Designate Color. Q - Bisque W - White**

© Copyright, Alliance Laundry Systems LLC – DO NOT COPY or TRANSMIT

Dual Digital Control - F in the 7th Position (Drawing 2 of 2)

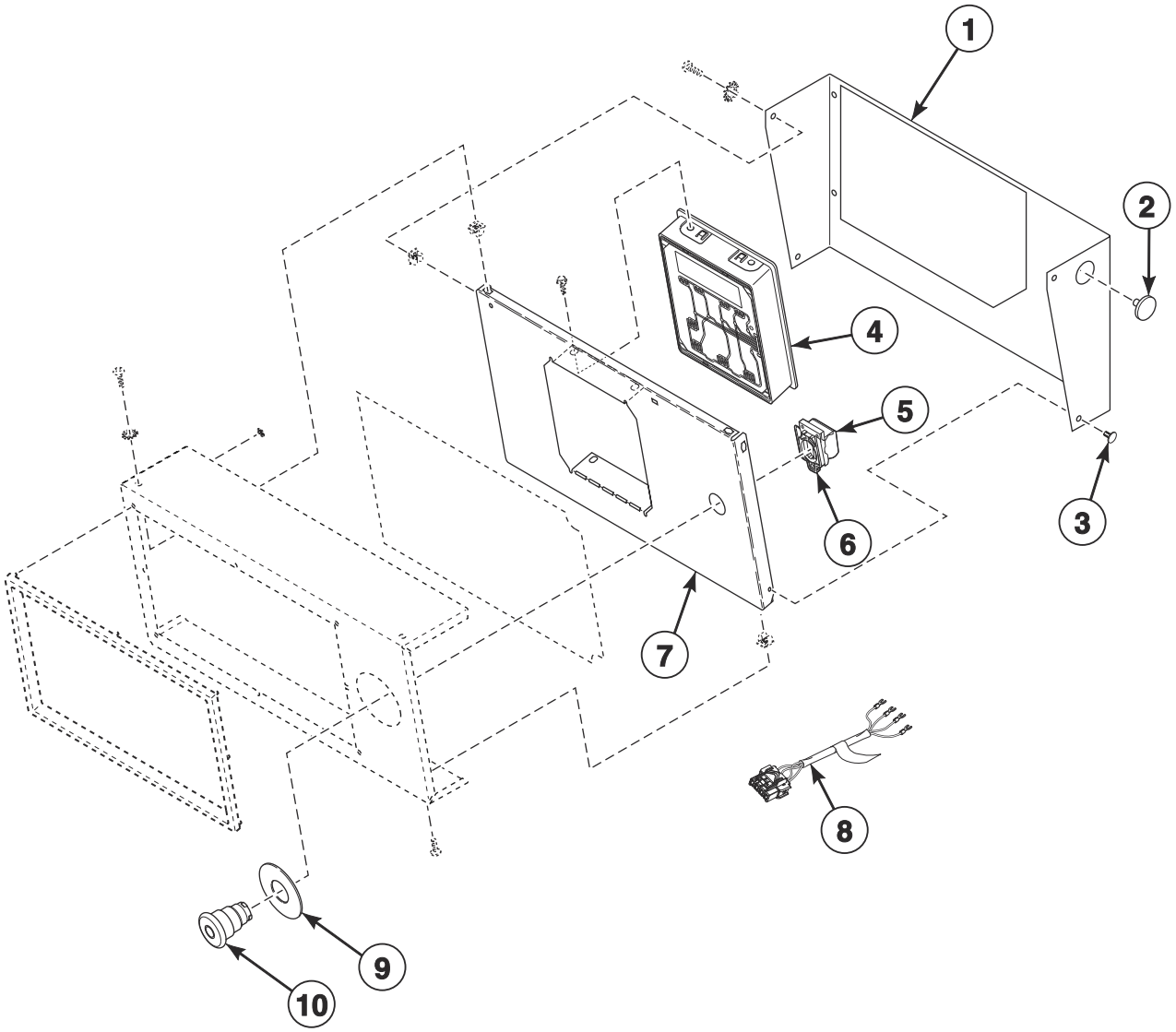

TMB3619PA_70592101

© Copyright, Alliance Laundry Systems LLC – DO NOT COPY or TRANSMIT

Dual Digital Control - F in the 7th Position (Drawing 2 of 2)

REF	PART NO.	DESCRIPTION	COMMENTS
1	44331005	Control Bracket	B, H, P and S models; Stainless steel
	44331006DG	Control Bracket	P models; Dark gray
	44331006W	Control Bracket	B, H, N, P, S and U models
	44331006B	Control Bracket	G and K models; Black
	44331006LG	Control Bracket	U models; Light gray
2	M400985	Plug	
3	430725	Pop Rivet	
4	70523101	Control Assembly	P models; Blue
	70479801	Control Assembly	G, H, K, N, S and U models; Green
	70479901	Control Assembly	B models; Red
5	F8069501	Contact Switch	2 required
6	F8538101	Contact Base	
7	44330901	Mounting Plate	
8	44272401	Emergency Stop Harness	
9	44012901	Emergency Stop Label	
10	F200233500	Emergency Stop Pushbutton	

*** Add Letter To Designate Color. Q - Bisque W - White**

© Copyright, Alliance Laundry Systems LLC – DO NOT COPY or TRANSMIT

Electronic Display Control - N in the 7th Position (Drawing 1 of 2)

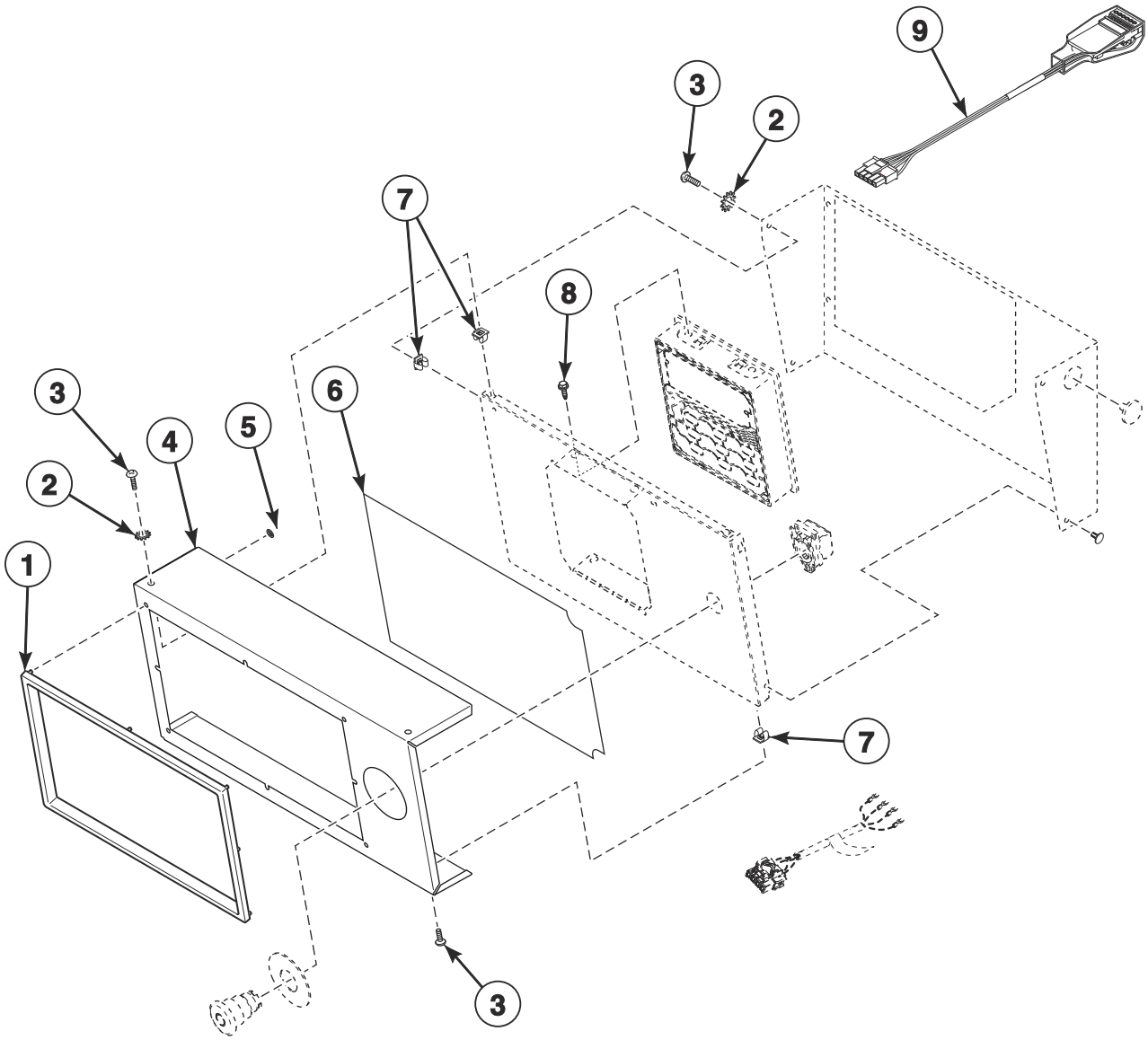

TMB3620P_70592101

© Copyright, Alliance Laundry Systems LLC – DO NOT COPY or TRANSMIT

Electronic Display Control - N in the 7th Position (Drawing 1 of 2)

REF	PART NO.	DESCRIPTION	COMMENTS
1	44016403	Control Trim	H models; Gray
	44016401	Control Trim	P and S models; Black
2	03815	Washer	
3	800930	Screw	
4	44330802	Control Cover	IEC B, P and U models; CSA B, P and U models through 12/31/18; Stainless steel; No trim
	44330805	Control Cover	IEC H, P and S models; CSA H, P and S models through 12/31/18; Stainless steel
	44330801*	Control Cover	IEC B and U models; CSA B and U models through 12/31/18
	44330806DG	Control Cover	IEC P models; CSA P models through 12/31/18; Dark gray
	44330804*	Control Cover	IEC H, N, P and S models; CSA H, N, P and S models through 12/31/18
	44330801B	Control Cover	IEC G and K models; CSA G and K models through 12/31/18; Black
	44330803LG	Control Cover	IEC U models; CSA U models through 12/31/18; Light gray
	44330811	Control Cover	CSA B, P and U models starting 1/1/19; Stainless steel; No trim; Design 3
	44330814	Control Cover	CSA H, P and S models starting 1/1/19; Stainless steel
	44330810*	Control Cover	CSA B and U models starting 1/1/19
	44330815DG	Control Cover	CSA P models starting 1/1/19; Dark gray
	44330813*	Control Cover	CSA H, N, P and S models starting 1/1/19
	44330810B	Control Cover	CSA G and K models starting 1/1/19; Black
	44330812LG	Control Cover	CSA U models starting 1/1/19; Light gray
5	M400977	Nut	8 required
6	70570601	Overlay	S models; Reversing; Design 3
	70638301	Overlay	S models; Reversing; Design 5
	70571401	Overlay	U models; Reversing; Design 3
	70638901	Overlay	U models; Reversing; Design 5
	70570801	Overlay	H models; Reversing; Design 3
	70636401	Overlay	H models; Reversing; Design 5
	70548801	Overlay	B models; Reversing
	70547801	Overlay	G and K models; Reversing
	70571601	Overlay	P models; Reversing
	70572401	Overlay	NT models through 10/9/19; All other N models; Reversing
	70570601	Overlay	NT models starting 10/10/19; Reversing
7	70030501	Expansion Clip	
8	804608	Screw	4 required
9	203361P	Machine ID Control Assembly	Model or serial number is required when ordering

*** Add Letter To Designate Color. Q - Bisque W - White**

© Copyright, Alliance Laundry Systems LLC – DO NOT COPY or TRANSMIT

Electronic Display Control - N in the 7th Position (Drawing 2 of 2)

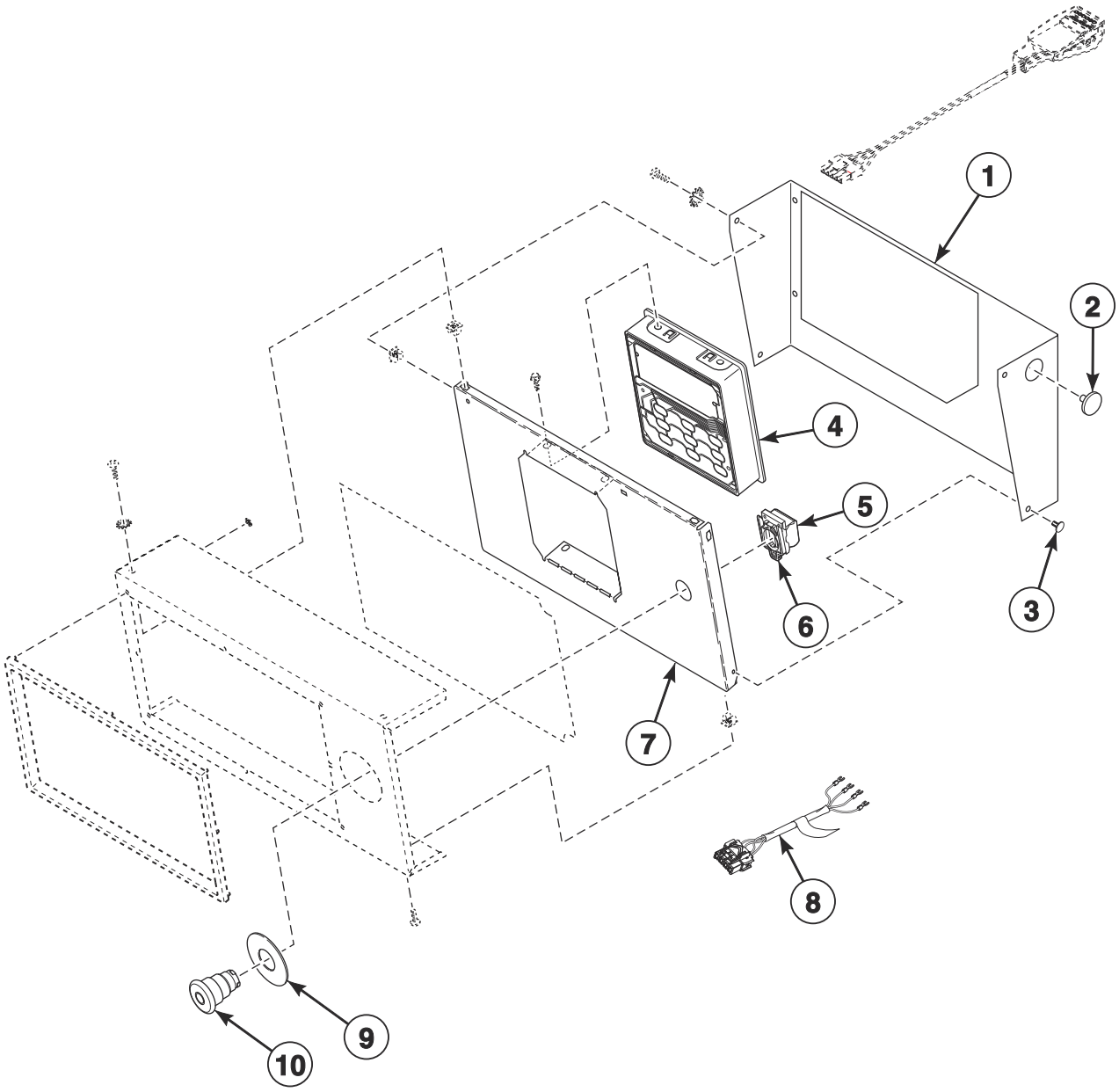

© Copyright, Alliance Laundry Systems LLC – DO NOT COPY or TRANSMIT

Electronic Display Control - N in the 7th Position (Drawing 2 of 2)

REF	PART NO.	DESCRIPTION	COMMENTS
1	44331005	Control Bracket	B, H, P and S models; Stainless steel
	44331006DG	Control Bracket	P models; Dark gray
	44331006W	Control Bracket	B, H, N, P, S and U models
	44331006B	Control Bracket	G and K models; Black
	44331006LG	Control Bracket	U models; Light gray
2	M400985	Plug	
3	430725	Pop Rivet	
4	70523004P	Control Assembly	P models; Blue
	70478804P	Control Assembly	G, H, K, N, S and U models; Green
	70478904P	Control Assembly	B models; Red
5	F8069501	Contact Switch	2 required
6	F8538101	Contact Base	
7	44330901	Mounting Plate	
8	44272401	Emergency Stop Harness	
9	44012901	Emergency Stop Label	
10	F200233500	Emergency Stop Pushbutton	

*** Add Letter To Designate Color. Q - Bisque W - White**

© Copyright, Alliance Laundry Systems LLC – DO NOT COPY or TRANSMIT

3.5 Inch Graphical Control - D in the 7th Position

U Models

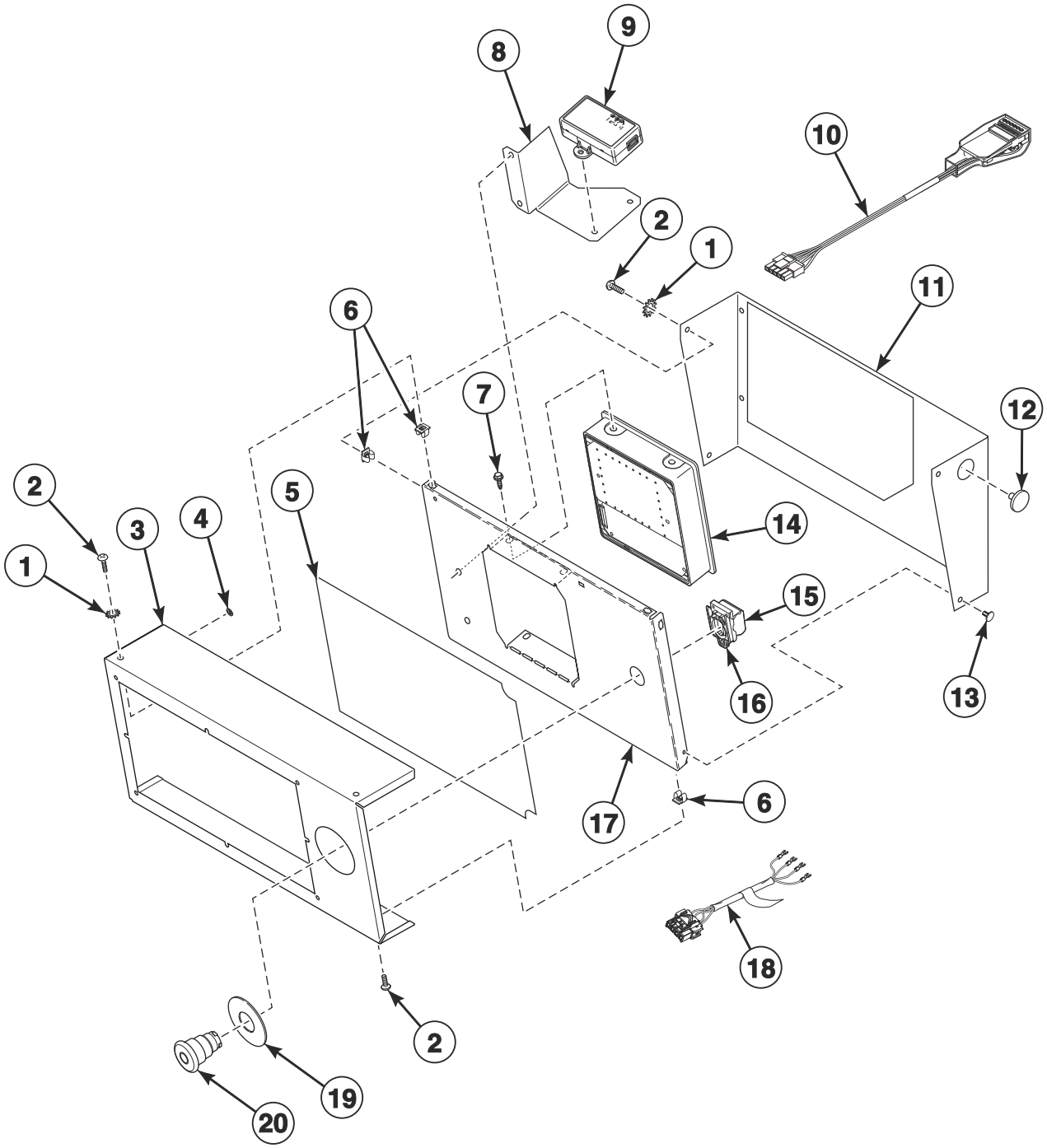

TMB3621P_70592101

© Copyright, Alliance Laundry Systems LLC – DO NOT COPY or TRANSMIT

3.5 Inch Graphical Control - D in the 7th Position

REF	PART NO.	DESCRIPTION	COMMENTS
	70596301	Wireless Network Kit	
	F8536002	Wireless Network Board Harness	
	203346	USB IR Interface Kit	
	F8617901	Harness	USB
	F8613201	FCC-IC Label	UT models
	03815	Washer	2 required; Use to attach item 9
	430497	Screw	2 required; Use to attach item 9
1	03815	Washer	
2	800930	Screw	
3	44330802	Control Cover	IEC models; CSA models through 12/31/18; Stainless steel; No trim
	44330801*	Control Cover	IEC models; CSA models through 12/31/18
	44330803LG	Control Cover	IEC models; CSA models through 12/31/18; Light gray
	44330811	Control Cover	CSA models starting 1/1/19; Stainless steel; No trim; Design 3
	44330810*	Control Cover	CSA models starting 1/1/19
	44330812LG	Control Cover	CSA models starting 1/1/19; Light gray
4	M400977	Nut	8 required
5	70595401	Overlay	Design 3 models
	70639001	Overlay	Design 5 models
6	70030501	Expansion Clip	
7	804608	Screw	
8	44331101	Mounting Bracket	
9	203440	USB-Serial Interface Assembly	
10	203361P	Machine ID Control Assembly	Model or serial number is required when ordering
11	44331006W	Control Bracket	
	44331006LG	Control Bracket	Light gray
12	M400985	Plug	
13	430725	Pop Rivet	
14	70543104	Control Assembly	
15	F8069501	Contact Switch	2 required
16	F8538101	Contact Base	
17	44330901	Mounting Plate	
18	44272401	Emergency Stop Harness	
19	44012901	Emergency Stop Label	
20	F200233500	Emergency Stop Pushbutton	

*** Add Letter To Designate Color. Q - Bisque W - White**

© Copyright, Alliance Laundry Systems LLC – DO NOT COPY or TRANSMIT

Fire Suppression System Control Box

B, G, H, K, NT, P, S and U Models

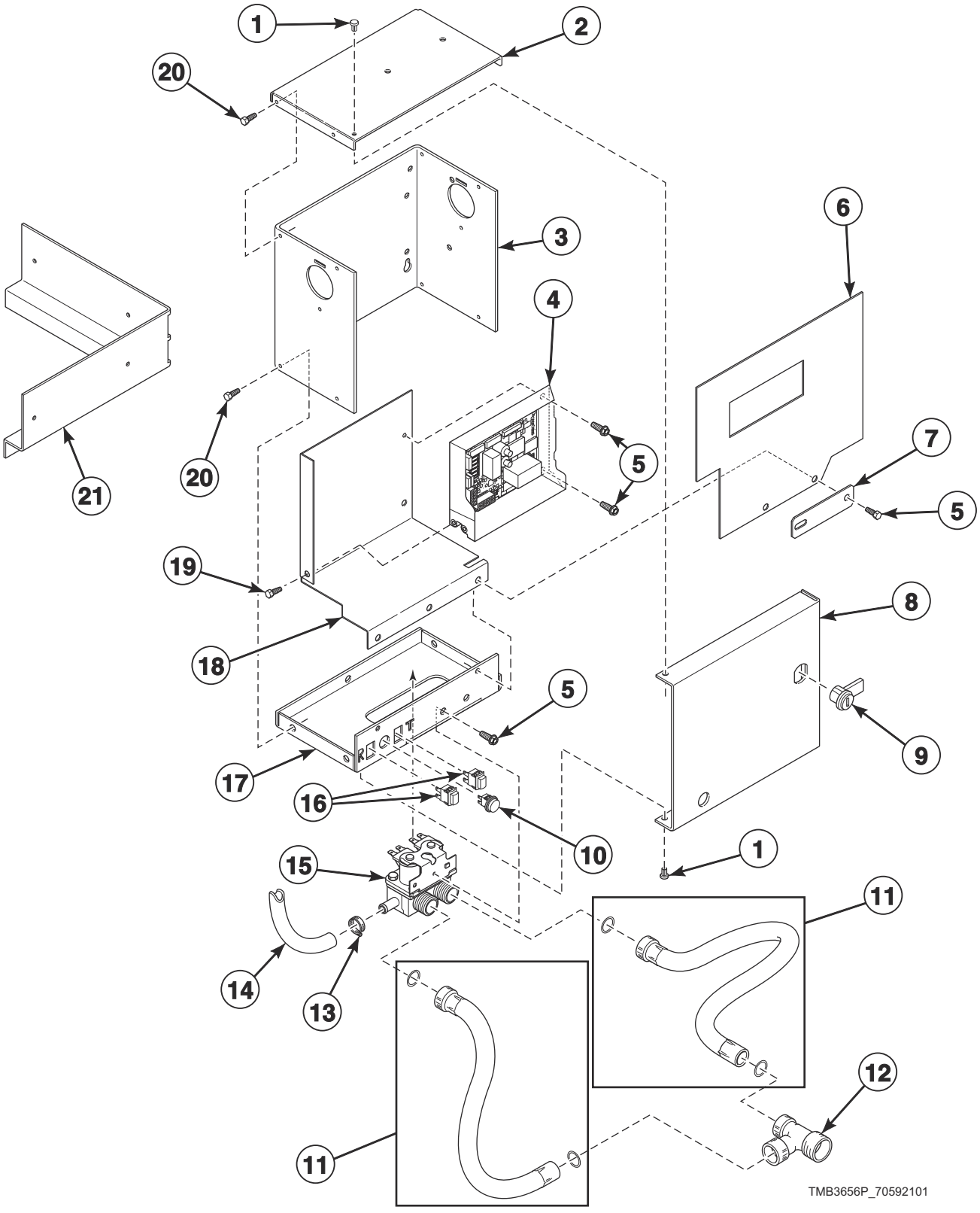

© Copyright, Alliance Laundry Systems LLC – DO NOT COPY or TRANSMIT

Fire Suppression System Control Box

REF	PART NO.	DESCRIPTION	COMMENTS
	44340301	Cold Weather Kit	
	70155601	Key	RL001; Use with item 9
	44079602	Manifold	
	44334404	Control Harness	
	44334405	Water Valve Harness	
	44334408	Power Sensor Harness	
	44334407	Sensor Harness	
	44334401	Interconnect Harness	
	70346501	Bushing	
	44324501	Warning Label	F.S.S.; CSA models
	44324500	Label Kit	F.S.S.; IEC models
	F8614401	Shock Warning Label	CSA models
	F8614201	Shock Warning Label	IEC models
	44318200	Label Kit	IEC models
	44324502	Warning Label	
	44318201	Label	CSA models
1	M400713	Drive Rivet	
2	44307101	Control Box Top	
3	44306701	Control Box Housing	
4	70511601	Control	
5	430497	Screw	
6	44326801	Shield	
7	70551701	Filter Mounting Plate	
8	44065201	Control Box Cover	
9	70733701	Lock, Key and Nut Kit	RL001 key code; Optional if same key is to be used for control lock
10	801432	Light	
11	202799	Fill Hose	2 required; GHT
	202800	Fill Hose	2 required; BSPP
12	44069101	Hose Fitting	CSA models
13	36801	Hose Clamp	
14	44073306	Hose	28.12 inches; Outlet hose
15	70519801	Mixing Valve	
16	801434W	Push-to-Start Switch	2 required
17	44065301	Control Box Base	
18	44306601	Mixing Valve Shield Bracket	
19	804608	Screw	
20	51780	Screw	
21	44310901	Support Bracket	

© Copyright, Alliance Laundry Systems LLC – DO NOT COPY or TRANSMIT

Front Panel Components

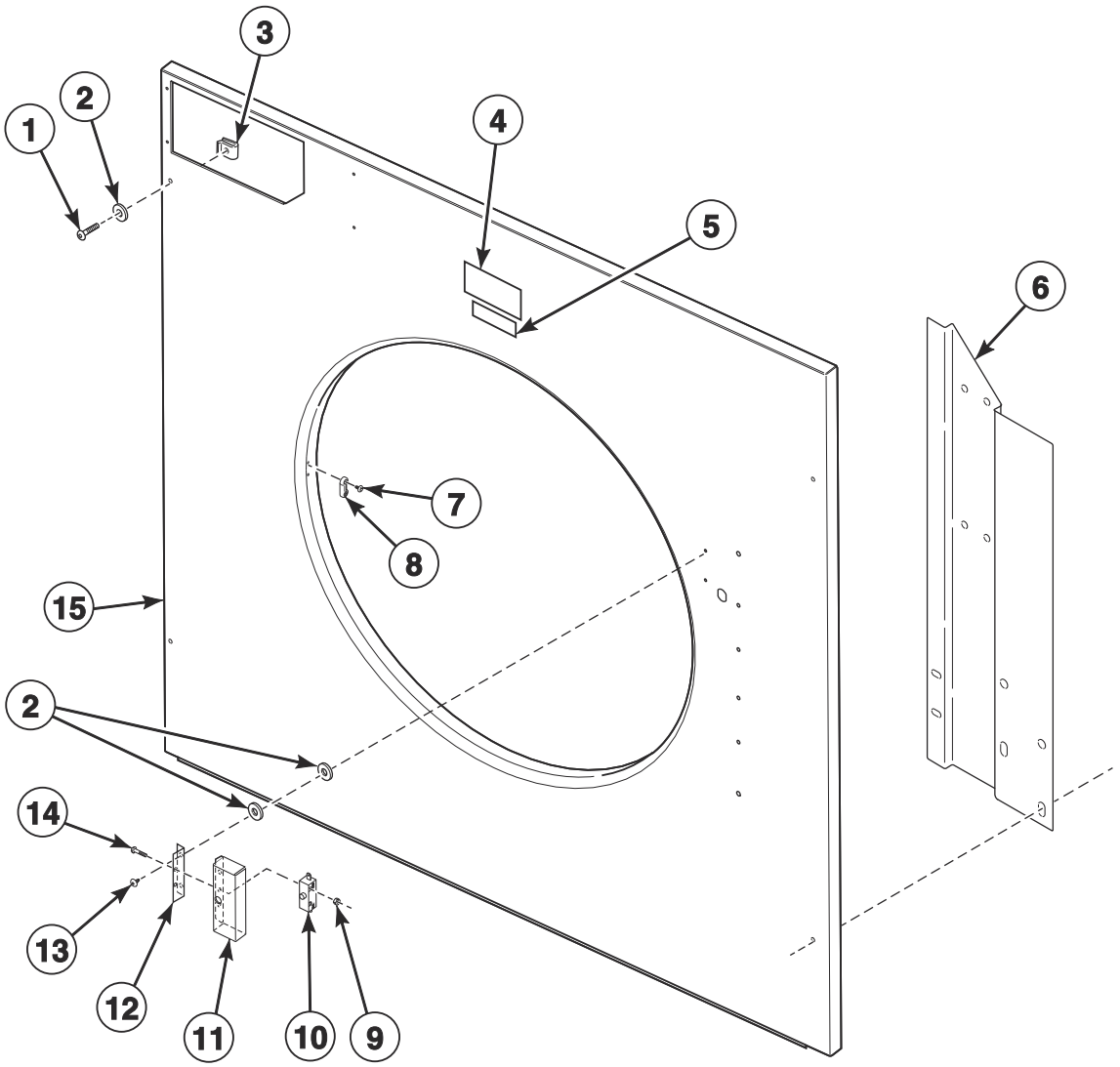

TMB3823P_70592101

© Copyright, Alliance Laundry Systems LLC – DO NOT COPY or TRANSMIT

Front Panel Components

REF	PART NO.	DESCRIPTION	COMMENTS
	298P4P	Spray Paint	White
	122P4P	Porcelain Touch-Up Paint	White
	370P4P	Porcelain Touch-Up Paint	Bisque
	44335203	Door Switch Harness	
	70482901	Door Catch Kit	
1	70182601	Screw	4 required per panel
2	800465	Washer	4 required per panel
3	70030401	Nut	Access and front panel attachment
4	70537001	Label	B, H, N, S and U models; C.A.R.E.
	70537101	Label	G and K models; F.S.S.
	44190901	Label	P models; Safe Tech
5	70472801	Label	U models
6	44286002	Door Switch Wire Channel	Design 3 models
	44368702	Upper Hinge/Wire Cover Bracket	Design 5 models
7	44166601	Pop Rivet	2 required
8	M401223	Door Latch	
9	29787	Nut	2 required
10	44312401	Switch	
11	44316301	Door Switch Cover	
12	44316601	Door Switch Shield	
13	431287	Screw	2 required
14	M402574	Screw	2 required
15	44291903DG	Front Panel	P models; Dark gray
	44291903LG	Front Panel	U models; Design 3; Light gray
	44291903W	Front Panel	Design 3 models
	44291902	Front Panel	B, H, P, S and U models; Design 3; Stainless steel
	44368503	Front Panel	Design 5 H, S and U models; Stainless steel
	44368501W	Front Panel	Design 5 H, S and U models

*** Add Letter To Designate Color. Q - Bisque W - White**

© Copyright, Alliance Laundry Systems LLC – DO NOT COPY or TRANSMIT

Access Panel and Nameplates

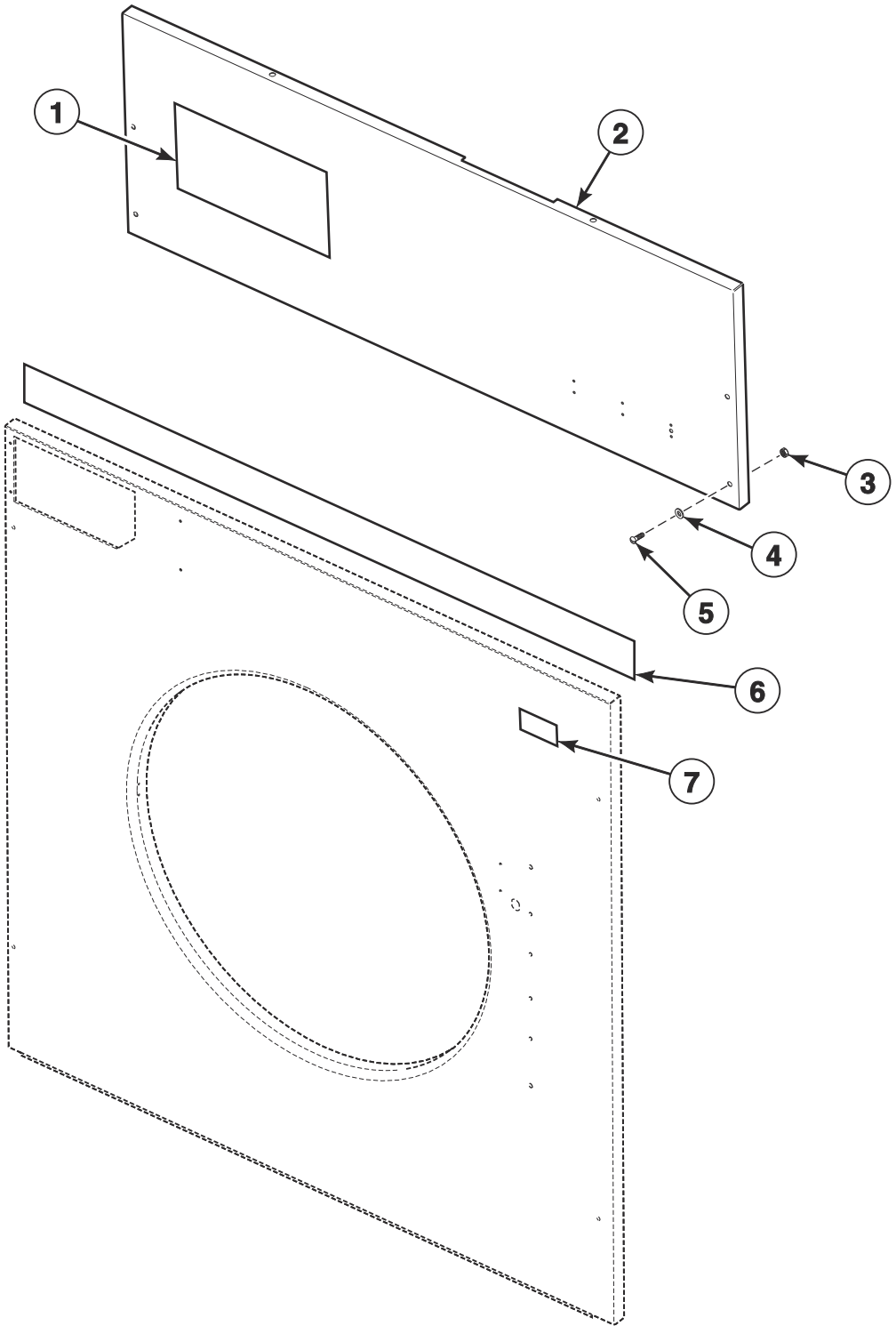

TMB3625P_70592101

© Copyright, Alliance Laundry Systems LLC – DO NOT COPY or TRANSMIT

Access Panel and Nameplates

REF	PART NO.	DESCRIPTION	COMMENTS
1	70410201	Nameplate Overlay	G models
	44130401	Nameplate Overlay	K models
	70472001	Nameplate	B models
	44010601	Nameplate	S models; Design 3
	F8688901	Nameplate	S models; Design 5
	F8688001	Nameplate	H models; Design 5
	F8443107	Nameplate	U models
2	44012709DG	Front Access Panel	P models; Dark gray
	44012707WP	Front Access Panel	All models except B models; Design 3
	44012709B	Front Access Panel	B models
	44012709LG	Front Access Panel	U models; Light gray; Design 3
	44012714	Front Access Panel	H, P, S and U models; Stainless steel; Design 3
	44367203	Front Access Panel	Stainless steel; Design 5 models
	44367204W	Front Access Panel	Design 5 models
3	70030401	Nut	4 required
4	800465	Washer	4 required
5	70182601	Screw	4 required
6	70399404	Access Panel Trim	G and K models; Mounts over front panel assembly and control panel
7	567887	Nameplate	P models

© Copyright, Alliance Laundry Systems LLC – DO NOT COPY or TRANSMIT

Door Components

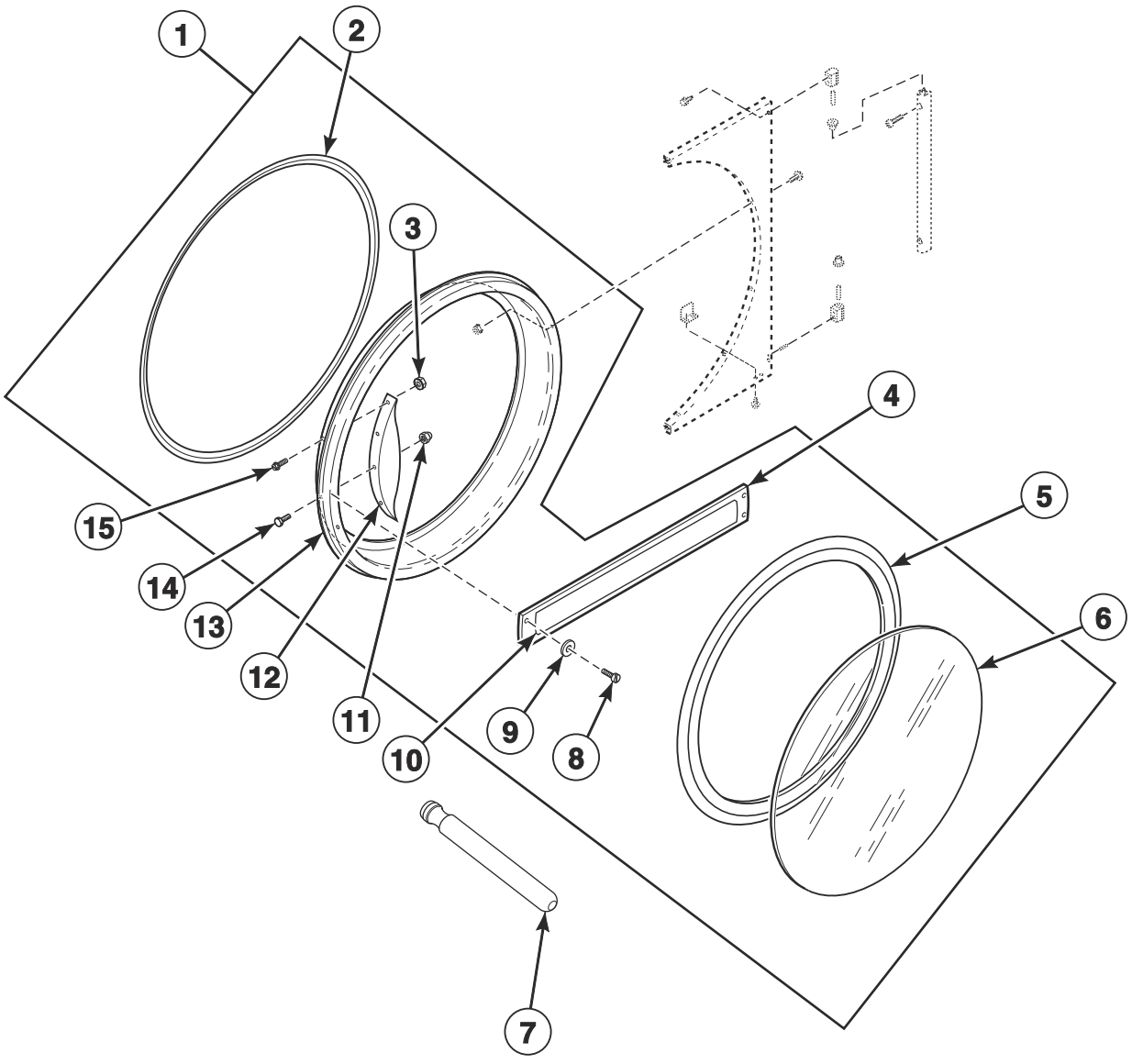

© Copyright, Alliance Laundry Systems LLC – DO NOT COPY or TRANSMIT

Door Components

REF	PART NO.	DESCRIPTION	COMMENTS
	70650401	Door Glass Label	H models; Design 5
	70707701	Door Glass Label	S models
	70707501	Max Fill Line Label	
1	44058105P	Door Assembly	H models; Stainless steel; Design 3
	44028906P	Door Assembly	S models; Stainless steel; Design 3
	44266701P	Door Assembly	U models; Stainless steel; Design 3
	44354705	Door Assembly	H models; Stainless steel; Design 5
	44354701	Door Assembly	S models; Stainless steel; Design 5
	44354703	Door Assembly	U models; Stainless steel; Design 5
	44028907P	Door Assembly	B and N models
	44292302LGP	Door Assembly	P models; Light gray
	44292302B	Door Assembly	P models; Use with stainless steel front panel; Black
	70407402P	Door Assembly	G and K models
2	70296802	Door Ring Gasket	H models with chrome handle
	44008201P	Door Ring Gasket	All other models
3	44088001	Nut	B, H, N and S models; 4 required
4	70399501B	Handle Bar	G and K models
5	70211902P	Door Seal Kit	Use Loctite 414 for seal
6	44008402P	Door Glass	H models; Design 3
	44008401P	Door Glass	All other models; Design 5 H models
7	M4221P4	Door Glass Installation Tool	
8	70412601	Pop Rivet	G and K models; 4 required
9	70409301	Washer	G and K models; 2 required
10	70414001	Label	K models; Coin
11	M414215	Nut	
12	70521102	Door Handle	H models; Design 3
	44370601	Door Handle	H models; Design 5
	44007901	Door Handle	B, N and S models
	44263801	Door Handle	U models; Use 901620 Screw, 800465 Washer, 803871 Screw and 44088001 Nut to attach; 90-degree chrome pull handle
13	44326001	Door Ring Assembly	H and S models; Stainless steel; Design 3
	44326002	Door Ring Assembly	U models; Design 3
	44326007LG	Door Ring and Handle Assembly	P models; Light gray
	44326007B	Door Ring and Handle Assembly	P models; Use with stainless steel and white front panel; Black
	44326004B	Door Ring Assembly	B and N models
	44326003B	Door Ring Assembly	G and K models
14	M400661	Screw	Door strike
15	70442101	Screw	B, H, N and S models; 4 required

© Copyright, Alliance Laundry Systems LLC – DO NOT COPY or TRANSMIT

Hinge Components - Design 3 Models

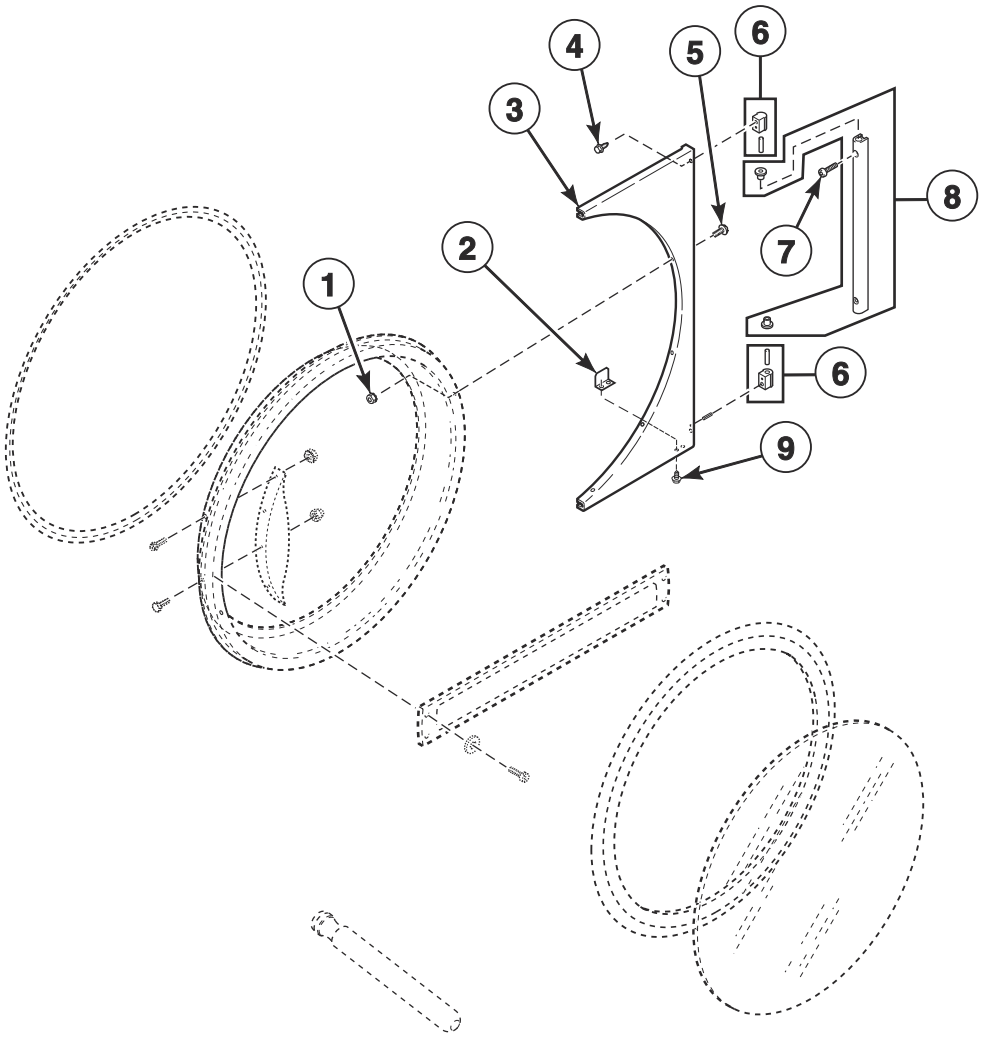

TMB3091PA_70592101

© Copyright, Alliance Laundry Systems LLC – DO NOT COPY or TRANSMIT

Hinge Components - Design 3 Models

REF	PART NO.	DESCRIPTION	COMMENTS
1	44088001	Nut	6 required
2	70215001P	Door Switch Actuator Kit	
3	44075207B	Door Hinge	Black; B, G, K and N models; P models with white and stainless steel front panels
	44075201*	Door Hinge Assembly	H, N, S and U models
	44075210	Door Hinge Assembly	H, S and U models; Stainless steel
	44075207LG	Door Hinge Assembly	P and U models; Light gray
4	70442101	Screw	3 required
5	44349101	Screw	6 required
6	M4773P3	Hinge Cam Kit	Black; B, G, K and N models; P models with white and stainless steel front panels
	M4772P3	Hinge Cam Kit	H, P, S and U models
7	70409801	Screw	Black; B, G, K and N models; P models with white and stainless steel front panels; 2 required
	70033502	Screw	H, P, S and U models; 2 required
8	44035002	Door Hinge Lug Assembly	Black; B, G, K and N models; P models with white and stainless steel front panels
	44035001	Door Hinge Lug Assembly	H, P, S and U models
9	70058501	Pop Rivet	2 required

*** Add Letter To Designate Color. Q - Bisque W - White**

© Copyright, Alliance Laundry Systems LLC – DO NOT COPY or TRANSMIT

Hinge Components - Design 5 Models

H, S and U Models

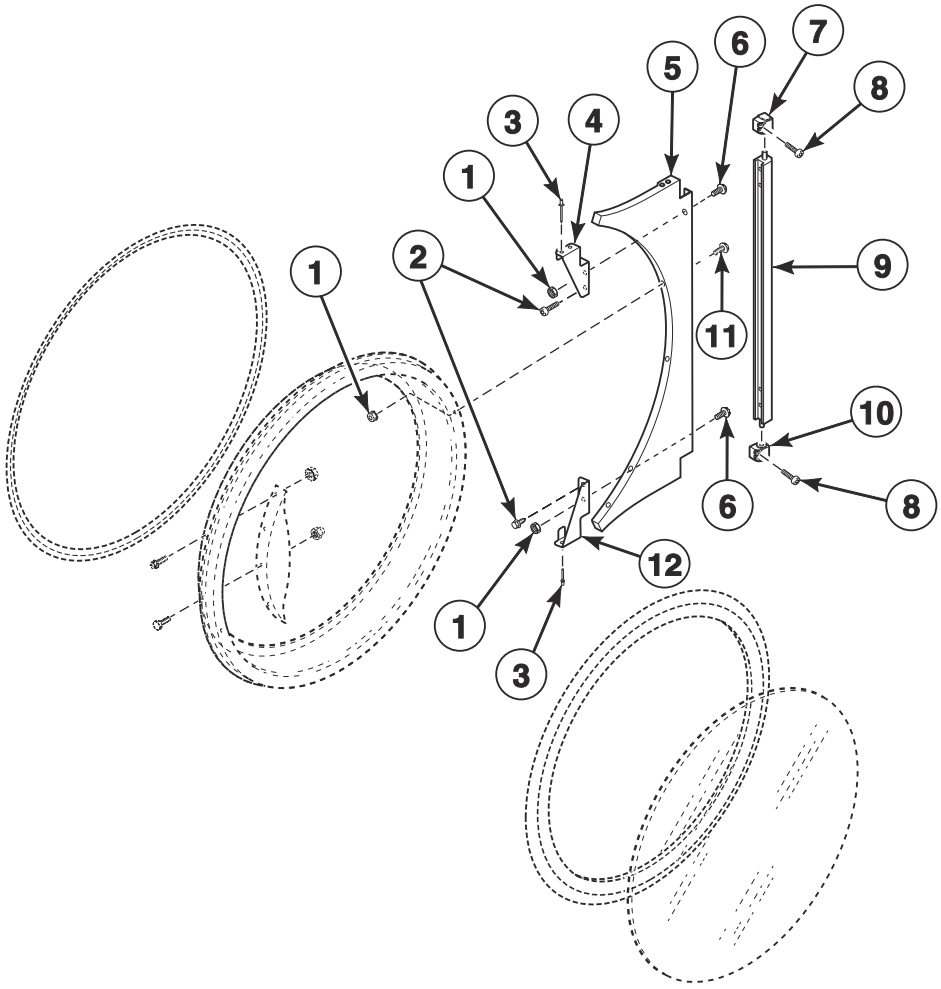

TMB3805P_70592101

© Copyright, Alliance Laundry Systems LLC – DO NOT COPY or TRANSMIT

Hinge Components - Design 5 Models

REF	PART NO.	DESCRIPTION	COMMENTS
1	44088001	Nut	
2	802822	Screw	
3	70058501	Pop Rivet	
4	44376501	Upper Hinge Gusset	
5	44366606W	Door Hinge Assembly	White
	44366604	Door Hinge Assembly	Stainless steel
	44366602LG	Door Hinge Assembly	Light gray; U models
	44366608	Door Hinge Assembly	Chrome
6	70640201	Screw	
7	70639301	Upper Lug Assembly	
8	70640301	Screw	
9	70640401	Center Hinge Lug Assembly	
10	70639302	Lower Lug Assembly	
11	44349101	Screw	
12	70632002	Lower Hinge Gusset	

© Copyright, Alliance Laundry Systems LLC – DO NOT COPY or TRANSMIT

Lint Panel Components

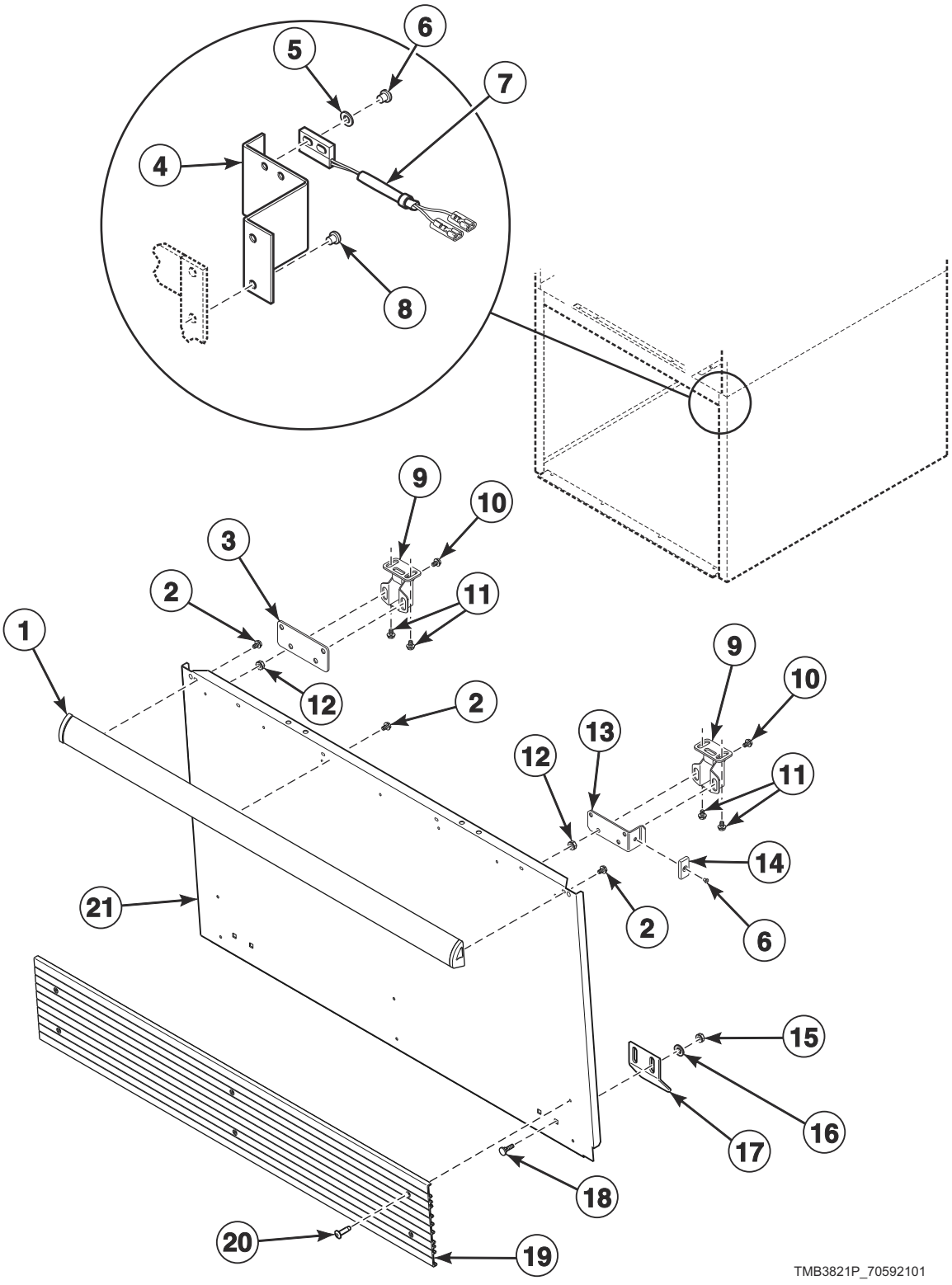

© Copyright, Alliance Laundry Systems LLC – DO NOT COPY or TRANSMIT

Lint Panel Components

REF	PART NO.	DESCRIPTION	COMMENTS
1	44049903	Handle and Caps Assembly	B, N, S and U models; P models with white and stainless steel front panels; Black; Includes endcaps
	70407212	Handle Bumper	P models
	70154417	Handle and Caps Assembly	H and U models; Gray; Includes endcaps
	70407204	Handle Bumper	G and K models; Black and blue; Does not have endcaps
2	430757	Screw	6 required
3	44014001	Roller Catch Mounting Bracket	2 required
4	44296301	Switch Bracket	
5	F431125	Washer	2 required
6	70743501	Rivet	2 required
7	F8066804	Reed Switch Assembly	
8	430725	Pop Rivet	2 required
9	H87020202	Roller Catch	2 required; Includes strike
10	70442101	Screw	8 required
11	D501086	Screw	4 required
12	44088001	Nut	8 required
13	44288401	Mounting Plate	
14	70343101	Magnet	
15	44087101	Nut	4 required
16	M400080	Washer	Design 5 models
17	44017801	Lint Panel Clip	2 required
18	44017901	Bolt	Design 3 models
	203798	Bolt	Design 5 models
19	70117611	Kickplate	All models except H models; Black; Design 3
	70117621	Kickplate	H and U models; Gray; Design 3
20	70126301	Pop Rivet	Black; 6 required
	70126401	Pop Rivet	Gray; 6 required
21	44012304DG	Lint Panel	P models; Dark gray
	44012307	Lint Panel	P models; Stainless steel; Design 5 H, S and U models
	44012301*P	Lint Panel	Design 3 models
	44012304W	Lint Panel	Design 5 H, S and U models
	44012306	Lint Panel	All models except P models; Stainless steel; Design 3
	44012303LG	Lint Panel	U models; Light gray; Design 3
	44012304LG	Lint Panel	U models; Light gray; Design 5

*** Add Letter To Designate Color. Q - Bisque W - White**

© Copyright, Alliance Laundry Systems LLC – DO NOT COPY or TRANSMIT

Cabinet and Frame Assembly

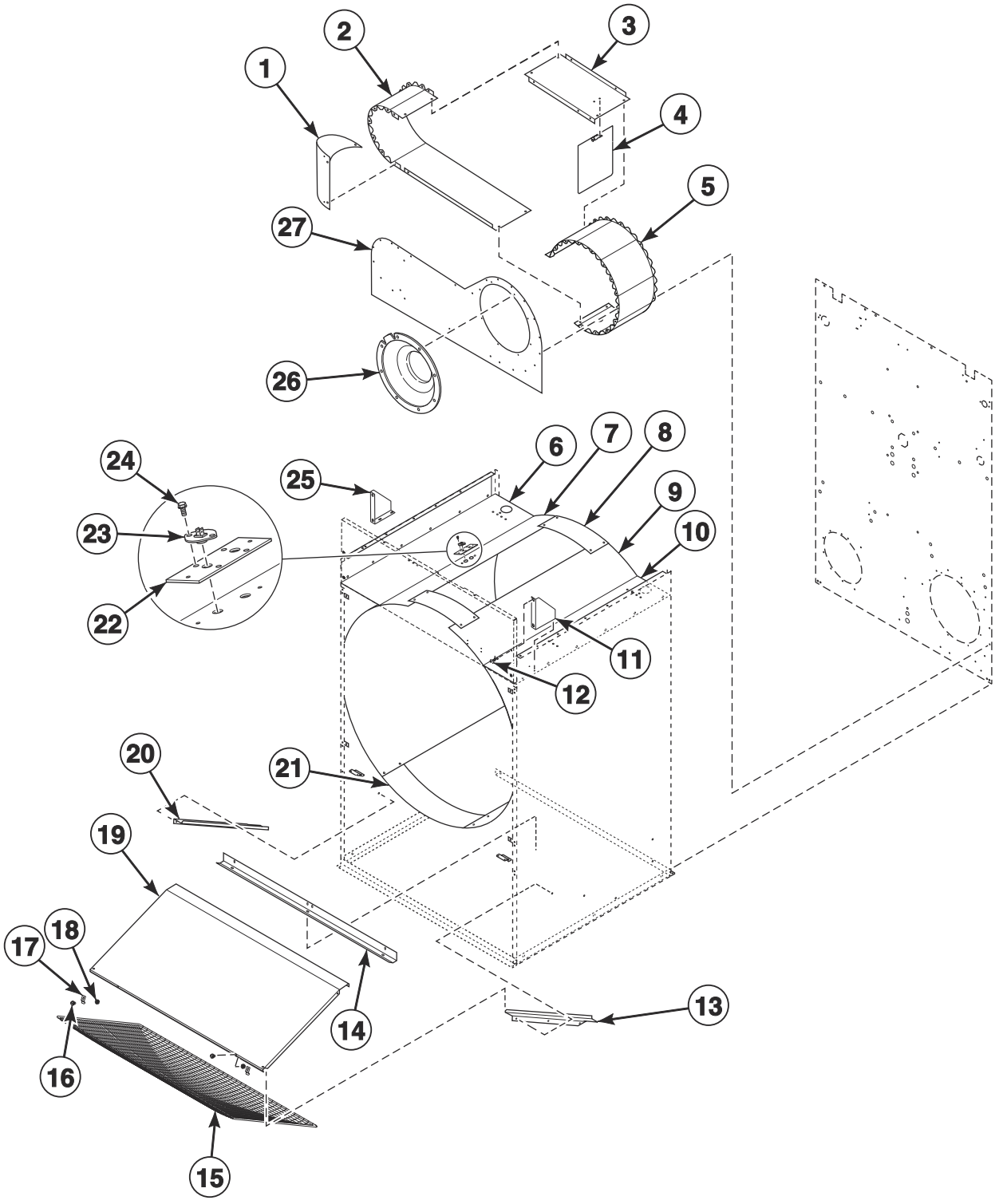

TMB3975P

© Copyright, Alliance Laundry Systems LLC – DO NOT COPY or TRANSMIT

Cabinet and Frame Assembly

REF	PART NO.	DESCRIPTION	COMMENTS
	M402144	Felt Pad	6 required; Behind front panel
1	44290301	Exhaust Deflector	
2	44289801	Blower Housing	Left
3	44289901	Blower Housing	Top
4	44280304	Damper Assembly	
5	44290001	Blower Housing Scroll	
6	44305802	Support Shelf	Left
7	44335501	Cylinder Shroud	Left
8	44335701	Cylinder Shroud	Top front and rear
9	44335601	Cylinder Shroud	Right
10	44305801	Support Shelf	Right
11	44028301DG	Top Access Panel Gusset	Dark gray; P models; Right
	44028301LG	Top Access Panel Gusset	Light gray; U models; Right
	44028301*	Top Access Panel Gusset	Right
12	431287	Screw	4 required
13	44291001	Lint Screen Support	Right
14	44307901	Lint Screen Support	Back
15	44063603P	Lint Screen	
16	70442101	Screw	
17	H96418413	Lint Screen Clip	
18	44088001	Nut	
19	44290901	Lint Hood	
20	44291002	Lint Screen Support	Left
21	44335801	Cylinder Shroud	Bottom rear
22	44068101	Thermistor Plate	Without fire Suppression system
	44068102	Thermistor Plate	With fire Suppression system
23	44064701	Thermistor	2 required; For fire suppression system
24	51780	Screw	
25	44028302DG	Top Access Panel Gusset	Dark gray; P models; Left
	44028302LG	Top Access Panel Gusset	Light gray; U models; Left
	44028302*	Top Access Panel Gusset	Left
26	44266902	Blower Inlet Cone	
27	44289701	Blower Housing	Front

© Copyright, Alliance Laundry Systems LLC – DO NOT COPY or TRANSMIT

Rear Panel Components

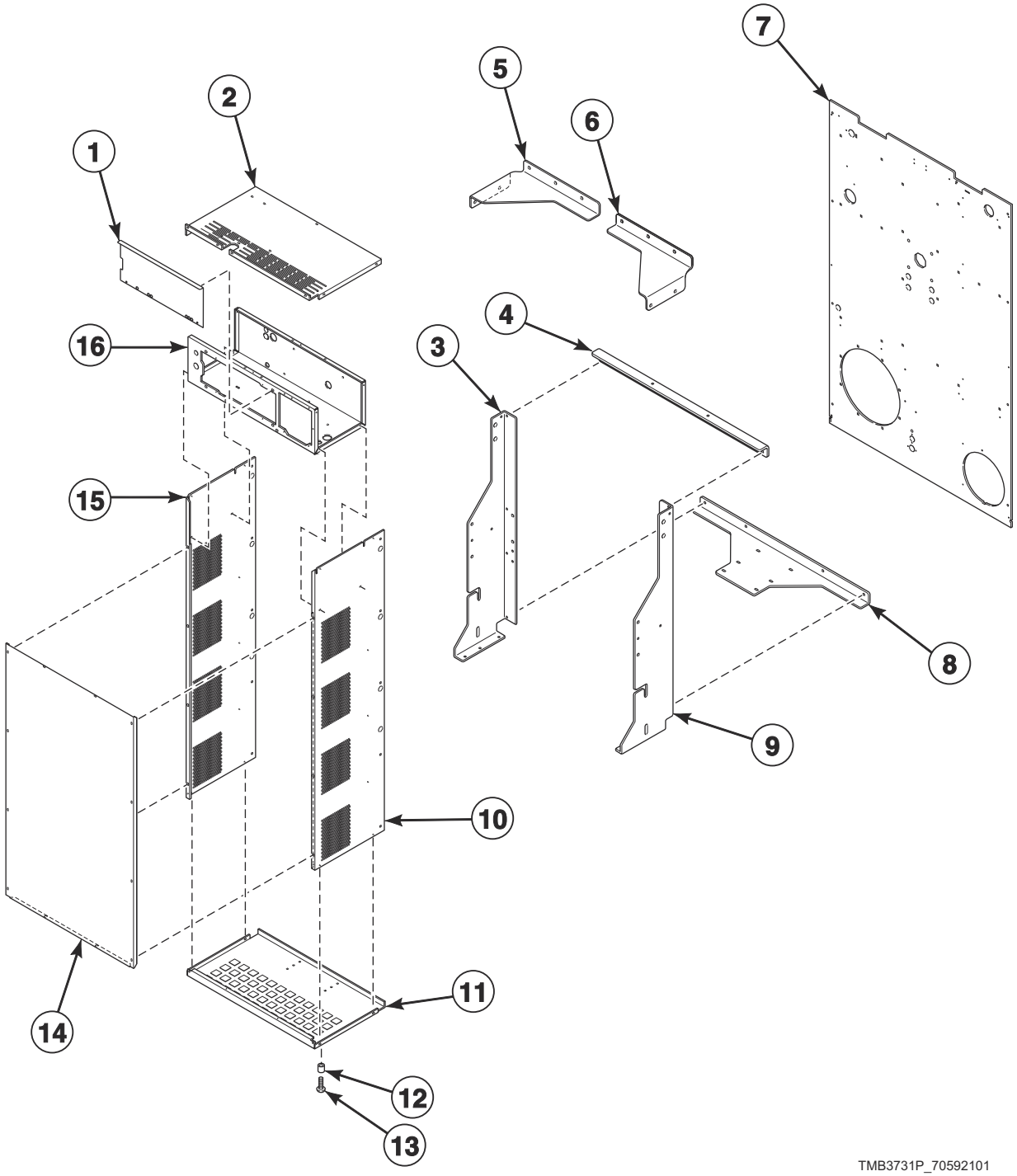

© Copyright, Alliance Laundry Systems LLC – DO NOT COPY or TRANSMIT

Rear Panel Components

REF	PART NO.	DESCRIPTION	COMMENTS
1	70507501	Control Tray Cover	
2	44314101	Belt Guard	Top
3	44311601	Rear Panel Brace	Right center
4	44275801	Rear Panel Support	Top
5	44311702	Rear Panel Support	Left inner
6	44311701	Rear Panel Support	Right inner
7	44265901	Rear Panel	
8	44311801	Rear Panel Brace	Bottom
9	44311602	Rear Panel Brace	Left center
10	44264201	Belt Guard	Right
11	44169801	Belt Guard	Bottom
12	56079	Panel Locator	
13	70275801	Screw	
14	44169601	Belt Guard	Rear
15	44264202	Belt Guard	Left
16	44314201	Belt Guard	Center

© Copyright, Alliance Laundry Systems LLC – DO NOT COPY or TRANSMIT

Cylinder and Trunnion Assembly

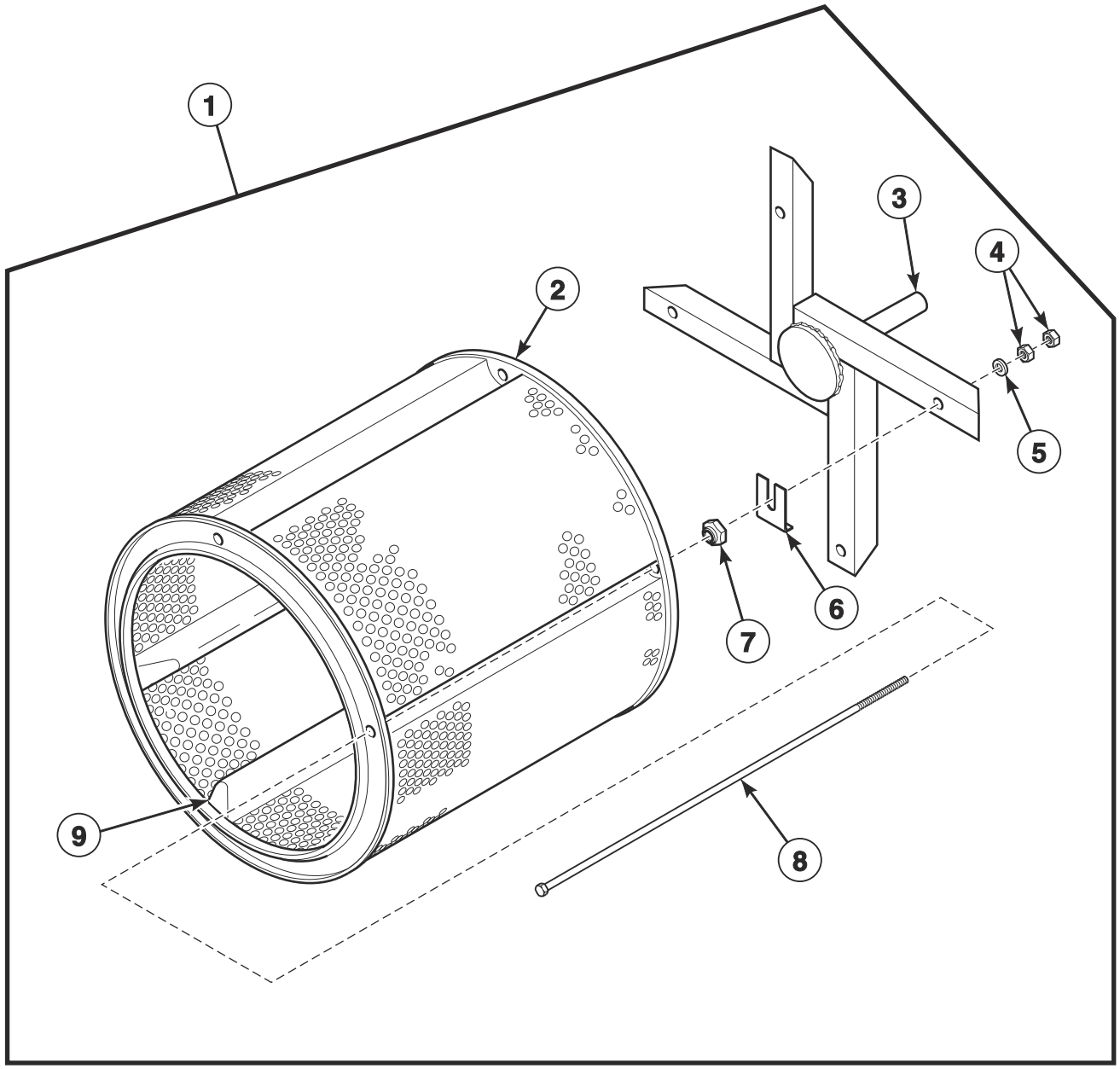

TMB1811B_70592101

© Copyright, Alliance Laundry Systems LLC – DO NOT COPY or TRANSMIT

Cylinder and Trunnion Assembly

REF	PART NO.	DESCRIPTION	COMMENTS
1	44054701	Cylinder and Trunnion Assembly	Galvanized; Non-moisture sensing
	44192001	Cylinder and Trunnion Assembly	Galvanized; Moisture sensing
	44054702	Cylinder and Trunnion Assembly	Stainless steel; Non-moisture sensing
	44192002	Cylinder and Trunnion Assembly	Stainless steel; Moisture sensing
2	H96367545	Cylinder Assembly	Galvanized; Includes items 4 and 8; Non-moisture sensing
	44191101	Cylinder Assembly	Galvanized; Moisture sensing
	M409826	Cylinder Assembly	Stainless steel; Includes items 4 and 8; Non-moisture sensing
	44191102	Cylinder Assembly	Stainless steel; Moisture sensing
3	44240801	Trunnion Assembly	Non-moisture sensing
	44240802	Trunnion Assembly	Moisture sensing
4	H88412101	Nut	8 required
5	70261401	Washer	4 required
6	M401402	Spacer	As required
7	M412334	Nut	4 required
8	H8830143H	Bolt	4 required
9	44191204	Cylinder Rib Assembly	Moisture sensing
	44158103	Cylinder Rib	Non-moisture sensing; Galvanized
	44158104	Cylinder Rib	Non-moisture sensing; Stainless steel

© Copyright, Alliance Laundry Systems LLC – DO NOT COPY or TRANSMIT

Trunnion Bearings

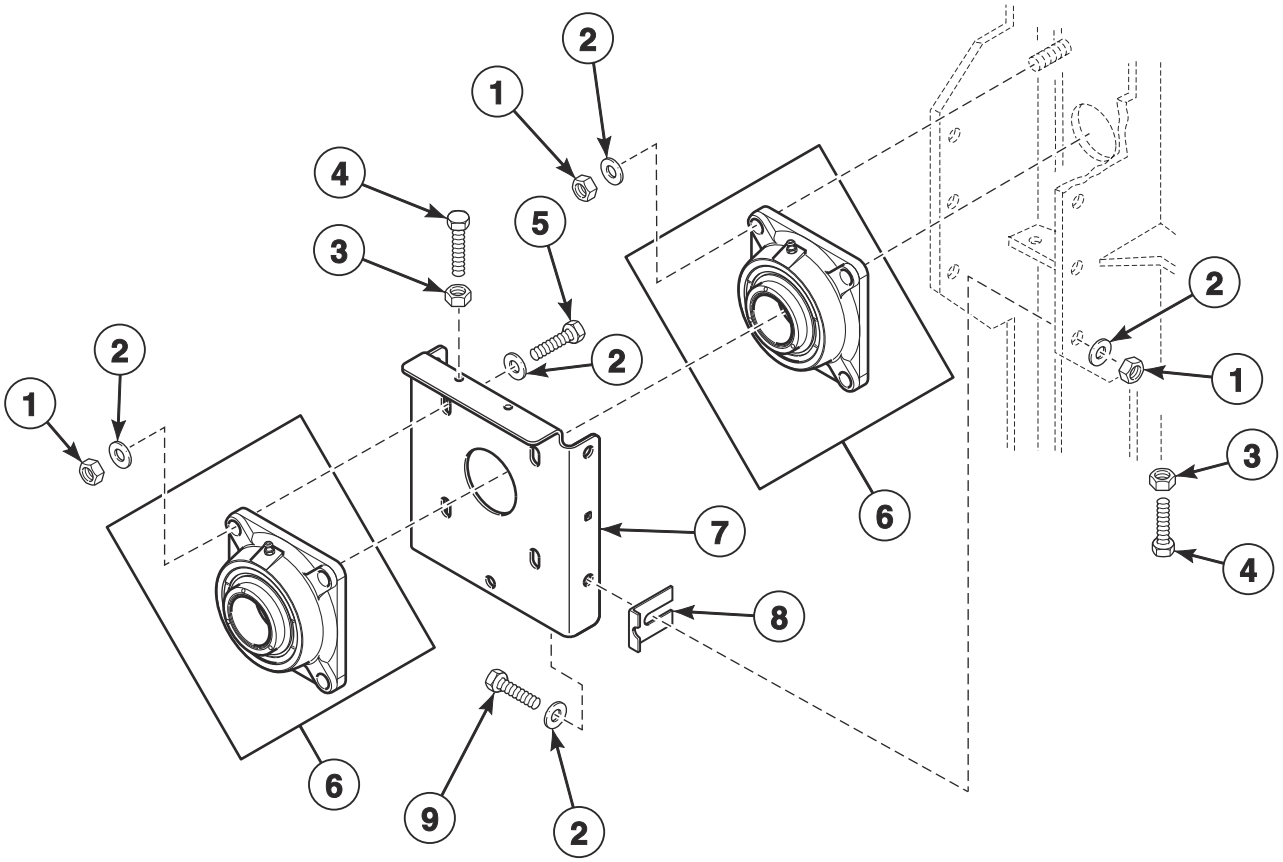

TMB3629P_70592101

© Copyright, Alliance Laundry Systems LLC – DO NOT COPY or TRANSMIT

Trunnion Bearings

REF	PART NO.	DESCRIPTION	COMMENTS
1	F8387701	Nut	
2	70261401	Washer	
3	20274	Nut	
4	800462	Screw	
5	M411165	Screw	
6	44048301P	Flange Bearing	
7	44301701	Bearing Mounting	
8	M401402	Spacer	As required
9	H88012034	Screw	

© Copyright, Alliance Laundry Systems LLC – DO NOT COPY or TRANSMIT

Moisture Sensing Components

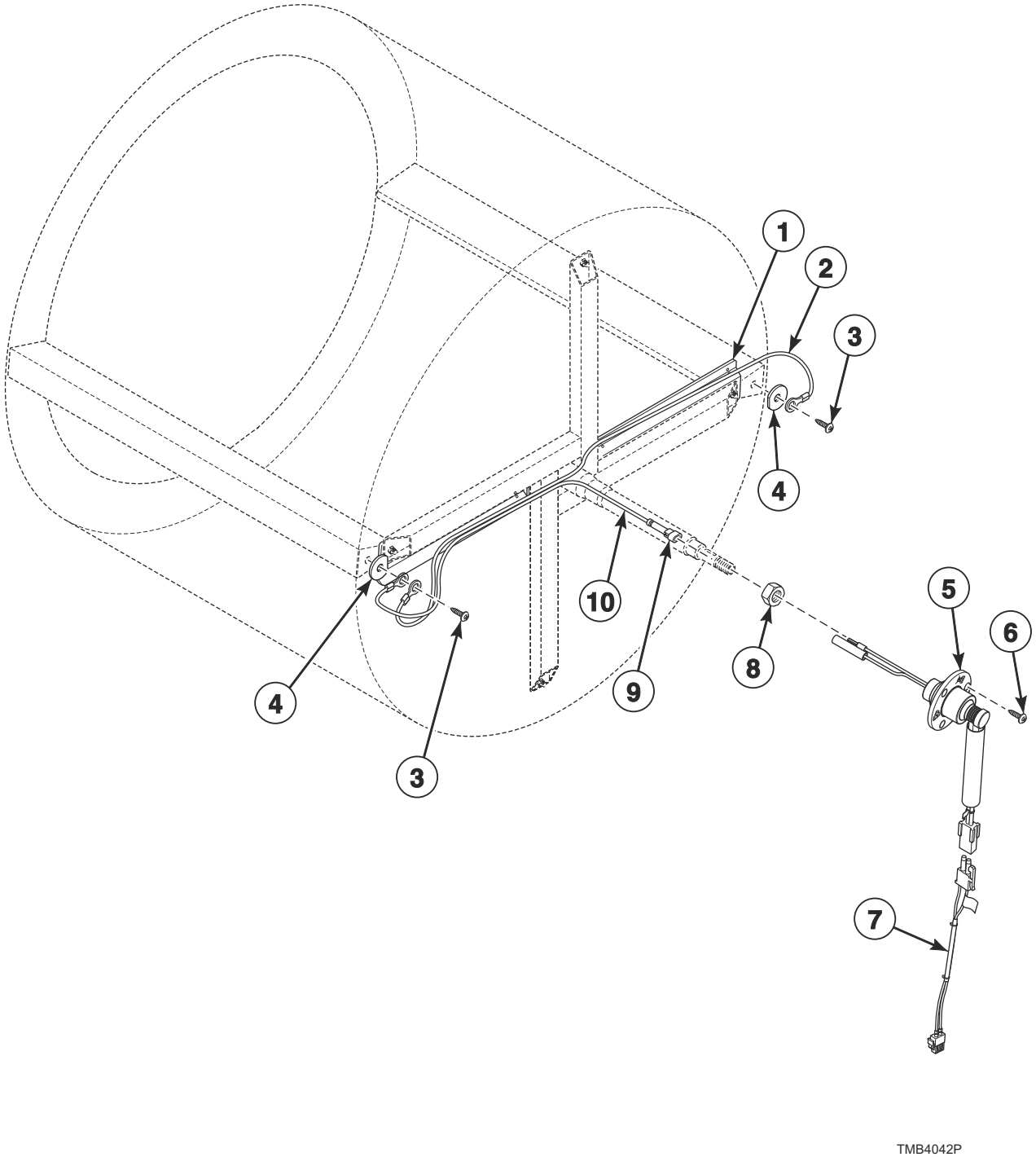

© Copyright, Alliance Laundry Systems LLC – DO NOT COPY or TRANSMIT

Moisture Sensing Components

REF	PART NO.	DESCRIPTION	COMMENTS
1	44239002	Wireway Channel	
2	44208101	Rib Wire	
3	44338901	Screw	
4	44238902	Washer	
5	44222702	Slip Ring Assembly	
6	70442101	Screw	
7	44333903	Moisture Sensor Harness	Goes from item 5 to main harness
8	M400033	Nut	
9	44370401	1 Circuit Plug Housing	
10	44344703	Moisture Sensing Harness Kit	

© Copyright, Alliance Laundry Systems LLC – DO NOT COPY or TRANSMIT

Cylinder Motor Components

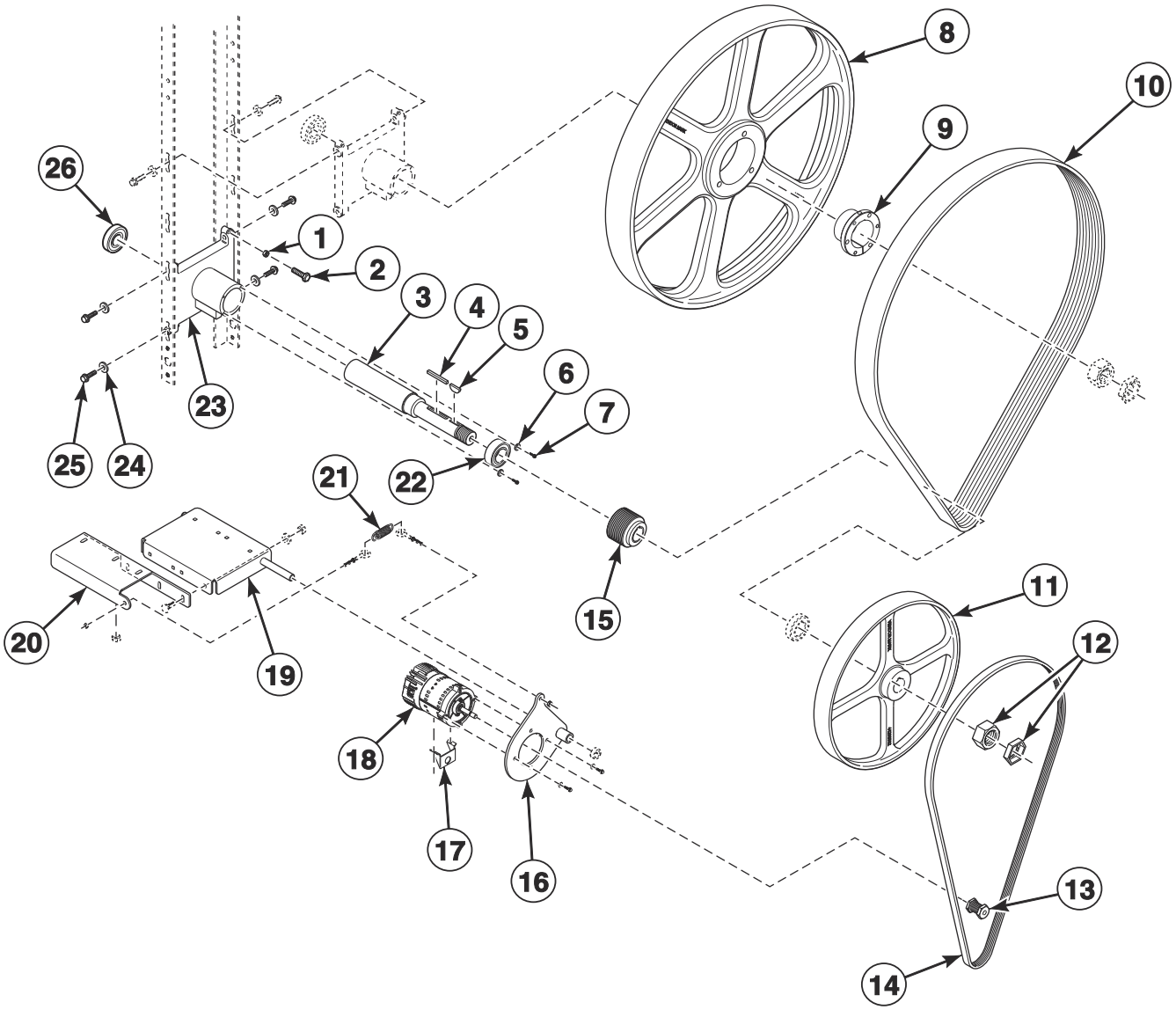

TMB3953P

© Copyright, Alliance Laundry Systems LLC – DO NOT COPY or TRANSMIT

Cylinder Motor Components

REF	PART NO.	DESCRIPTION	COMMENTS
	44335306	Inverter Motor Harness	Cylinder
	204454	Ferrite	Korean models; Applied to motor wires
	44375001P	Trunnion Assembly	Includes items 6, 7, 22, 23 and 26
1	M400026	Nut	
2	M400650	Bolt	
3	44303101	Idler Shaft	
4	M405232	Key	
5	M400008	Key	
6	20103	Washer	
7	70187201	Screw	
8	44289601	Pulley	
9	F280409P	Bushing	Includes 3 of 44079203 Screw (torque to 180 in-lbs [20.34 Nm]), 3 of M400013 Washer, 902094 Set Screw (torque to 87 in-lbs [9.83 Nm]) and key
10	44293702	V-Belt	
11	44289502	Pulley	
12	M400033	Nut	
13	44267601	Motor Pulley	
14	44309402	V-Belt	
15	44302901	Micro V Pulley	
16	44311501	Motor Pivot Plate Weldment	
17	44317901	Motor Conduit Bracket	
18	44259701P	Drive Motor	1.5 HP; 230 Volt/3 Phase
	44259801P	Drive Motor	1.5 HP; 460 Volt/3 Phase
19	44310601	Motor Pivot Bracket Weldment	
20	44310701	Motor Pivot Brace	
21	F8440701	Extension Spring	
22	M413923P	Bearing	
23	M413826P	Trunnion Housing	
24	70261401	Washer	
25	M400063	Screw	
26	44041901P	Ball Bearing	

© Copyright, Alliance Laundry Systems LLC – DO NOT COPY or TRANSMIT

Blower and Exhaust Components

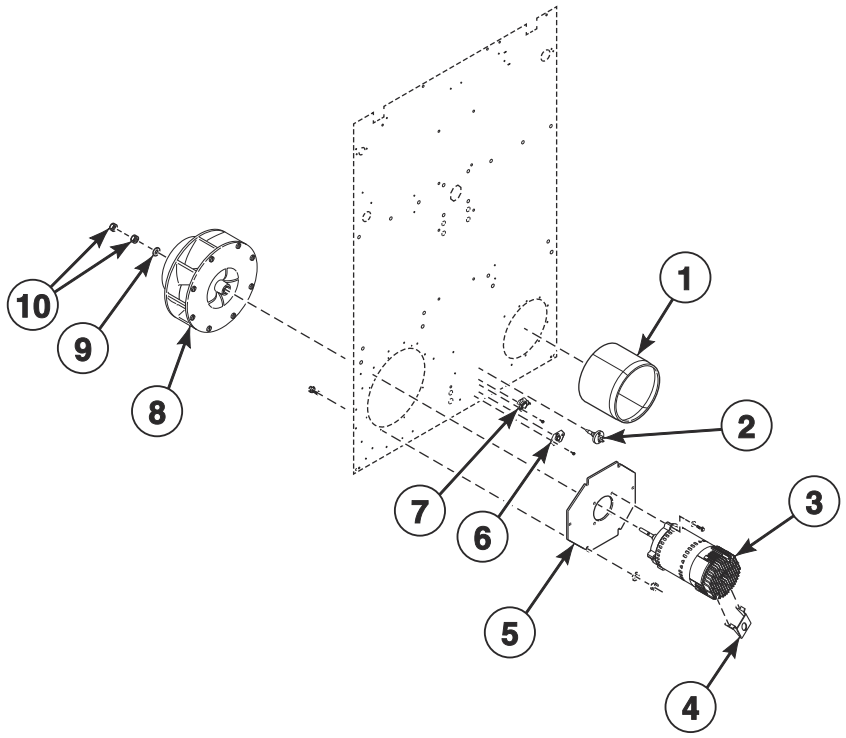

TMB4035P

© Copyright, Alliance Laundry Systems LLC – DO NOT COPY or TRANSMIT

Blower and Exhaust Components

REF	PART NO.	DESCRIPTION	COMMENTS
	44335307	Inverter Motor Harness	Fan
	204454	Ferrite	Korean models; Applied to motor wires
1	44305001	Exhaust Thimble Assembly	
2	M414704	Thermistor	
3	44259301P	Fan Motor	1.5 HP; 230 Volt/3 Phase
	44259401P	Fan Motor	1.5 HP; 460 Volt/3 Phase
4	44317901	Motor Conduit Bracket	
5	44311301	Blower Motor Mounting Plate	
6	70530905	Limit Thermostat	
7	44328002	Limit Thermostat	
8	44267201	Blower Assembly	
9	M400991	Washer	
10	M400022	Nut	

© Copyright, Alliance Laundry Systems LLC – DO NOT COPY or TRANSMIT

Airflow Switch

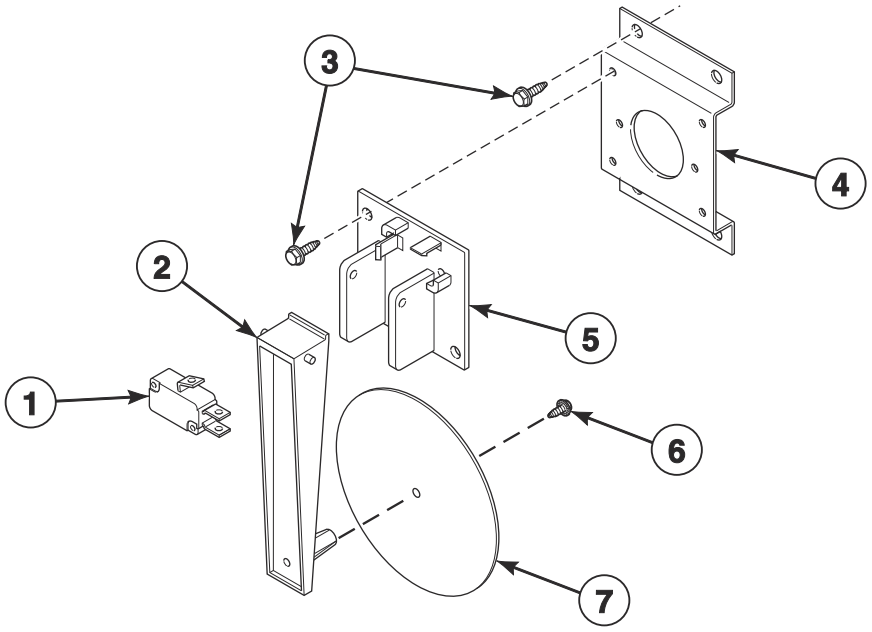

TMB3632P_70592101

© Copyright, Alliance Laundry Systems LLC – DO NOT COPY or TRANSMIT

Airflow Switch

REF	PART NO.	DESCRIPTION	COMMENTS
	70429601P	Airflow Switch Kit	Includes items 1, 2 and 5-7
1	70411901	Switch	
2	70319401	Airflow Switch Arm	
3	430497	Screw	
4	70356301	Switch Bracket	Gas models
5	70319602	Airflow Switch and Arm Bracket	
6	430757	Screw	
7	70319201	Airflow Switch Vane	

© Copyright, Alliance Laundry Systems LLC – DO NOT COPY or TRANSMIT

Gas Heater Components - Models with 2nd Digit A, G, H, J, K, R, and T

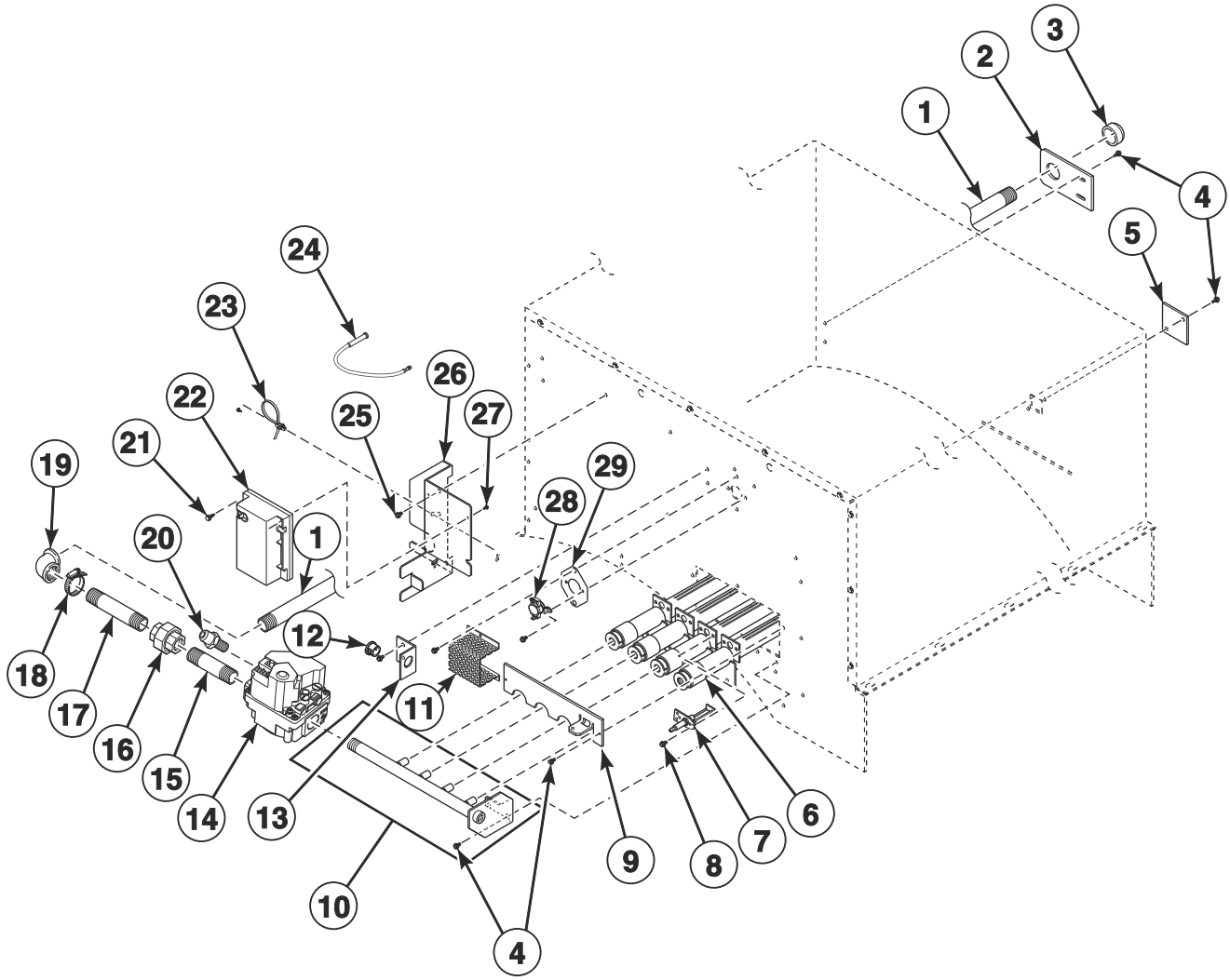

TMB3664P_70592101

© Copyright, Alliance Laundry Systems LLC – DO NOT COPY or TRANSMIT

Gas Heater Components - Models with 2nd Digit A, G, H, J, K, R, and T

REF	PART NO.	DESCRIPTION	COMMENTS
	70564304	Stove Limit Harness	
	44334603	ICM Harness	
	44328805	L.P. Conversion Kit	CSA models; 0-2,000 feet
	44328807	L.P. Conversion Kit	AGA models; 0-2,000 feet
	44330304	L.P. Conversion Kit	IEC models; 0-2,000 feet
	44273501	Gas Valve Harness	Single
	44324201	Caution Label	Australian models; Repeat ignition reset
	D503887	Label	Australian models; Gas
	70535901	Notice Label	Australian models; Natural Gas (N.G.)
	70544901	Notice Label	Australian models; Liquid Petroleum Gas (L.P.)
	44178803	Adapter	IEC models; BPT/NPT
	44342901	Reducer	IEC models
	H85101608	Nipple	IEC models
	M413021	Bushing	IEC models
	44174201	Pipe Tee	IEC models
1	44252401	Pipe Nipple	
2	44249301	Pipe Bracket	
3	44087801	Pipe Cap	
4	430497	Screw	
5	70159601	Igniter Cover	
6	M412025P	Burner	4 required
7	44328701P	Spark Electrode	
8	51782	Screw	2 required
9	44315201	Burner Hole Cover	
10	44390002	Spud Holder Weldment	
11	M414477	Thermostat Cover	
12	M400770	Snap Bushing	
13	431078	Stove Limit Harness Bracket	
14	44166701	Gas Valve	CSA models; N.G.
	44166702	Gas Valve	CSA models; L.P.
	44166703	Gas Valve	All other models; N.G.
	44166704	Gas Valve	All other models; L.P.
15	44249501	Pipe Nipple	
16	M411419	Pipe Union	
17	44252301	Pipe Nipple	
18	20391	Hose Clamp	
19	44249401	Pipe Elbow	
20	44231601	Pressure Fitting	IEC models
21	51783	Screw	
22	70482001	Ignition Control	CSA models
	70482002P	Ignition Control	IEC models
23	M405829	Cable Tie	
24	44239704	High Voltage Suppression Cable	
25	51780	Screw	
26	44245701	Gas Valve Bracket	
27	38272	Screw	
28	44328102	Limit Thermostat	N.G. models
	44328103	Limit Thermostat	L.P. models
29	44312501	Thermostat Opening Cover	

© Copyright, Alliance Laundry Systems LLC – DO NOT COPY or TRANSMIT

Gas Heater Components - Models with 2nd Digit U

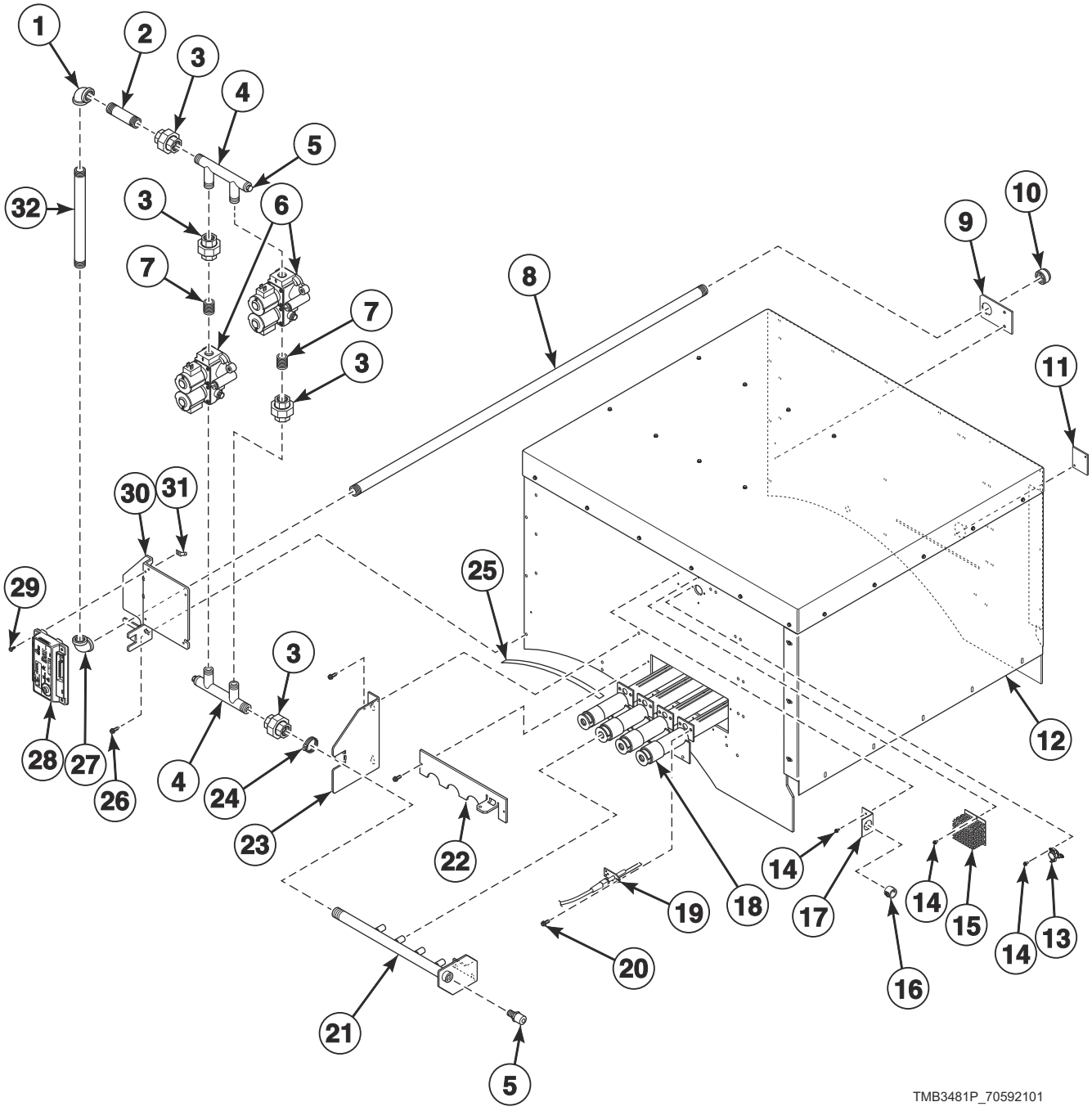

© Copyright, Alliance Laundry Systems LLC – DO NOT COPY or TRANSMIT

Gas Heater Components - Models with 2nd Digit U

REF	PART NO.	DESCRIPTION	COMMENTS
	70564304	Stove Limit Harness	
	44334603	ICM Harness	
	44330304	L.P. Conversion Kit	0-2,000 feet
	44273503	Gas Valve Harness	
	44178803	Adapter	BPT/NPT
	44342901	Reducer	
	H85101608	Nipple	
	M413021	Bushing	
	44174201	Pipe Tee	
1	F421107	Elbow	
2	H85101673	Nipple	
3	M411419	Pipe Union	4 required
4	44315401	Pipe Adapter Weldment	2 required
5	44231601	Pressure Fitting	2 required
6	44316801	Gas Valve	2 required; Natural Gas (N.G.)
	44316802	Gas Valve	2 required; Liquid Petroleum (L.P.)
7	H85101608	Nipple	2 required
8	44252401	Pipe Nipple	
9	44249301	Pipe Bracket	
10	44087801	Pipe Cap	
11	70159601	Igniter Cover	
12	44282600	Heater Assembly	
13	44328102	Limit Thermostat	N.G. models
	44328103	Limit Thermostat	L.P. models
14	430497	Screw	
15	M414477	Thermostat Cover	
16	M400770	Snap Bushing	
17	431078	Stove Limit Harness Bracket	
18	M412025P	Burner	4 required
19	44328701P	Spark Electrode	
20	51782	Screw	
21	44390002	Spud Holder Weldment	
22	44315201	Burner Hole Cover	
23	44317201	Gas Valve Support Bracket	
24	20391	Hose Clamp	
25	44333402	Gasket	2 required
26	51783	Screw	
27	44249401	Pipe Elbow	
28	70482002P	Ignition Control	
29	51780	Screw	
30	44245701	Gas Valve Bracket	
31	00177	Male Tab Terminal	
32	70543501	Pipe Nipple	

© Copyright, Alliance Laundry Systems LLC – DO NOT COPY or TRANSMIT

Burner Orifices

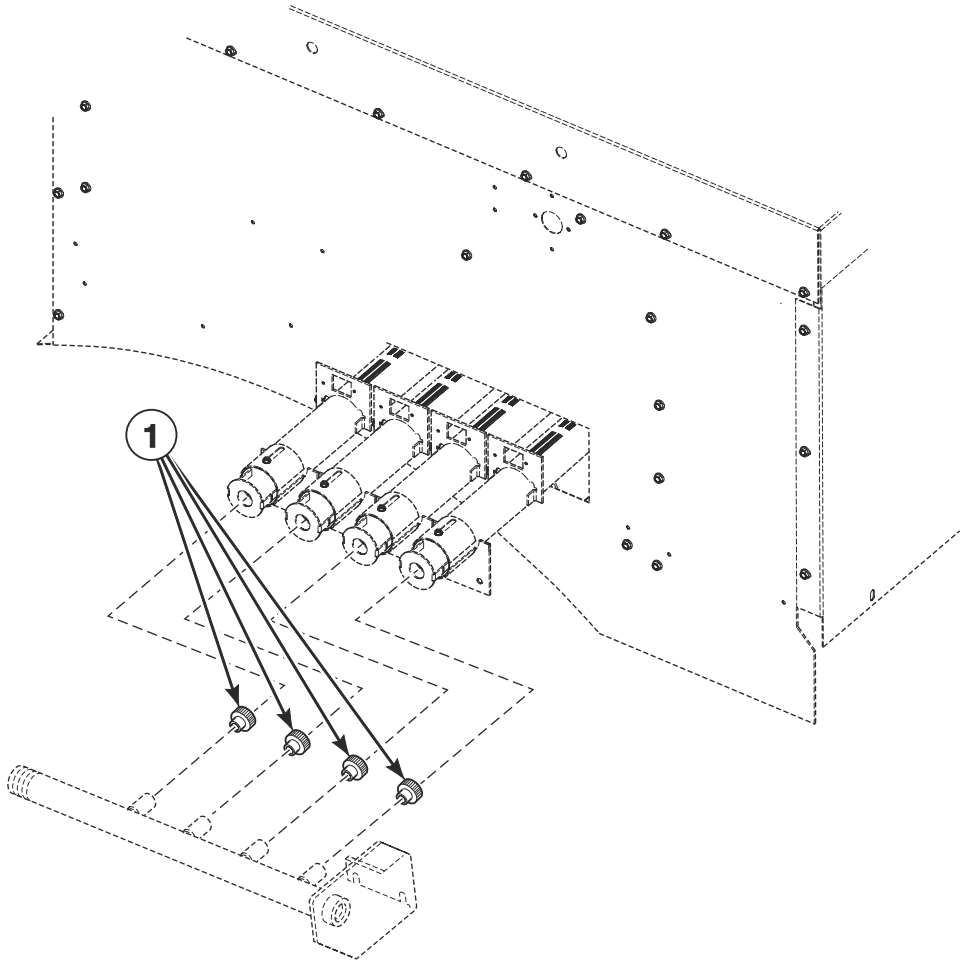

TMB3665P_70592101

© Copyright, Alliance Laundry Systems LLC – DO NOT COPY or TRANSMIT

Burner Orifices

REF	PART NO.	DESCRIPTION	COMMENTS
	44357509	High Altitude Orifice Kit	CSA Natural Gas (N.G.) models
	44357510	High Altitude Orifice Kit	CSA Liquid Petroleum Gas (L.P.) models
1	70684150	Burner Orifice	N.G. models; Drill no. 13 (4.70 mm); 0-2,000 feet
	70684147	Burner Orifice	N.G. models; Drill no. 16 (4.50 mm); 2,001-4,000 feet
	70684144	Burner Orifice	N.G. models; Drill no. 18 (4.31 mm); 4,001-6,000 feet
	70684143	Burner Orifice	N.G. models; Drill no. 19 (4.22 mm); 6,001-8,000 feet
	70684140	Burner Orifice	N.G. models; Drill no. 22 (3.99 mm); 8,001-10,000 feet
	70684130	Burner Orifice	Models with 2nd digit G, H, J, K and T; L.P.; 3.30 mm; 0-2,000 feet
	70684128	Burner Orifice	Models with 2nd digit G, H, J, K and T; L.P.; Drill no. 1/8 (3.18 mm); 2,001-4,000 feet
	70684126	Burner Orifice	Models with 2nd digit G, H, J, K and T; L.P.; Drill no. 31 (3.05 mm); 4,001-6,000 feet
	70684125	Burner Orifice	Models with 2nd digit G, H, J, K and T; L.P.; Drill no. 32 (2.95 mm); 6,001-8,000 feet
	70684123	Burner Orifice	Models with 2nd digit G, H, J, K and T; L.P.; Drill no. 34 (2.82 mm); 8,001-10,000 feet
	70684100	Burner Orifice	Blank; Models with 2nd digit G, H, J, K and T
	70684118	Burner Orifice	CE models; L.P.; Drill no. 38 (2.58 mm); 0-2,000 feet
	70684115	Burner Orifice	CE models; L.P.; Drill no. 41 (2.44 mm); 2,001-4,000 feet
	70684114	Burner Orifice	CE models; L.P.; Drill no. 42 (2.37 mm); 4,001-6,000 feet
	70684113	Burner Orifice	CE models; L.P.; 2.30 mm; 6,001-8,000 feet
	70684111	Burner Orifice	CE models; L.P.; 2.20 mm; 8,001-10,000 feet
	70684124	Burner Orifice	Australian models; L.P.; Drill no. 33 (2.87 mm); 0-2,000 feet
	70684120	Burner Orifice	Australian models; L.P.; Drill no. 36 (2.71 mm); 2,001-4,000 feet
	70684119	Burner Orifice	Australian models; L.P.; Drill no. 37 (2.64 mm); 4,001-6,000 feet
	70684117	Burner Orifice	Australian models; L.P.; Drill no. 39 (2.53 mm); 6,001-8,000 feet
	70684115	Burner Orifice	Australian models; L.P.; Drill no. 41 (2.44 mm); 8,001-10,000 feet

© Copyright, Alliance Laundry Systems LLC – DO NOT COPY or TRANSMIT

Steam Heater Components

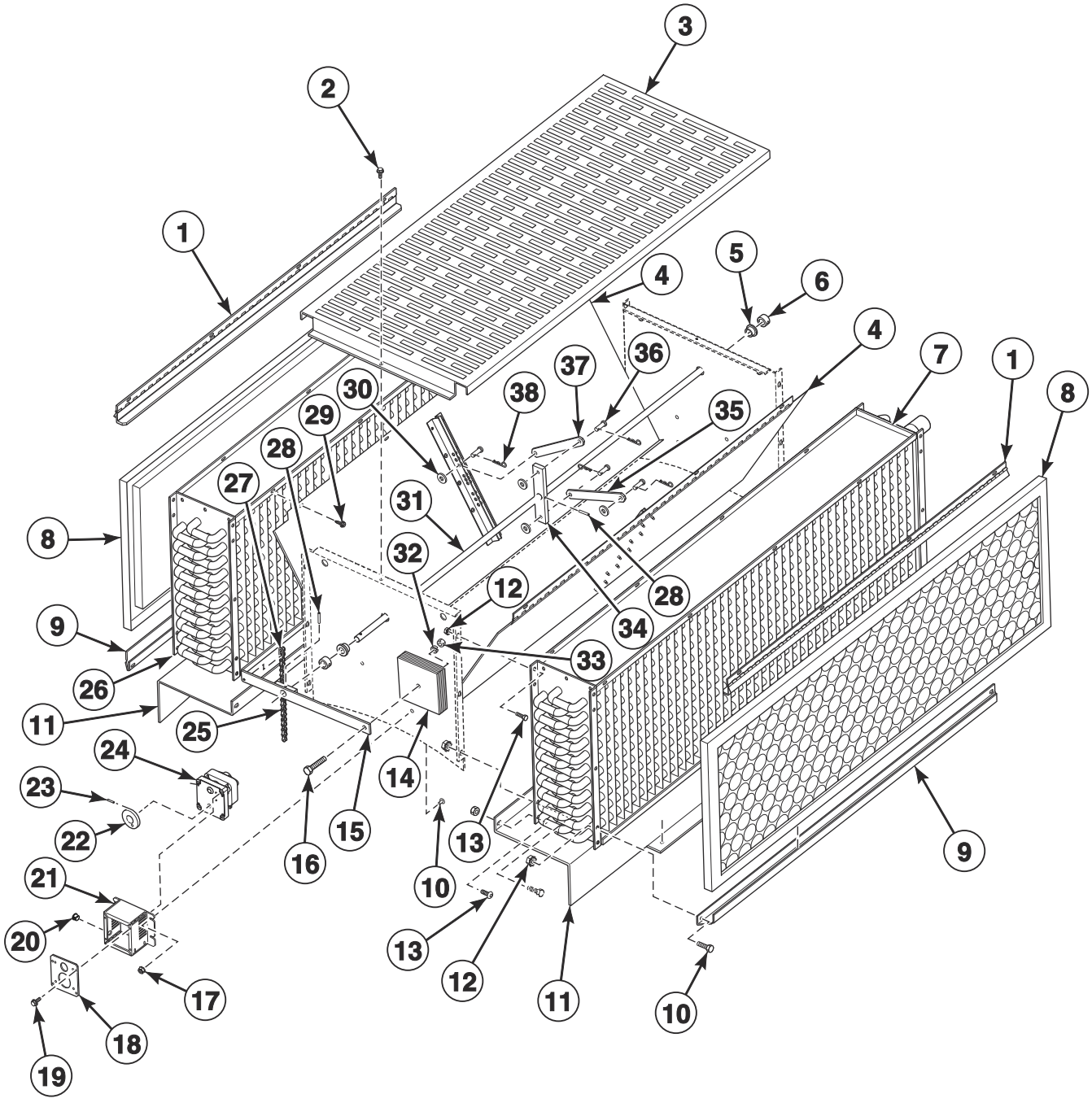

© Copyright, Alliance Laundry Systems LLC – DO NOT COPY or TRANSMIT

Steam Heater Components

REF	PART NO.	DESCRIPTION	COMMENTS
	44273606	Damper Motor Harness	
	F8520703	Steam Valve Harness	
	70564302	Stove Limit Bypass Harness	
	70523301	Harness Adapter Plate	
	44314801	Steam Adapter Kit	IEC models
	44317101	Steam Heater Assembly	CRN models
	44316901	Steam Heater Assembly	All other models
1	44088101	Steam Filter Top Hinge Assembly	2 required
2	M405188	Screw	
3	44115101	Steam Cover	
4	H96387519	Damper	2 required; Use M405750 Pop Rivet
5	M414459	Bushing	2 required
6	M414451	Shaft Collar	2 required
7	44256601	Steam Coil	CRN models
	M409834P	Steam Coil	All other models
8	44172101	Filter	IEC models; 2 required
	H96362264	Coil Filter	CSA models; 2 required
9	H96388087	Filter Channel	2 required; Upper
10	808210	Screw	2 required
11	M411550	Steam Coil Support	3 required
12	29786	Nut	3 required
13	02422	Screw	3 required
14	44332601	Steam Damper Counterweight	6 required
15	44332701	Shaft Actuator Assembly	
16	H88010574	Screw	
17	23951	Nut	3 required
18	44327501	Damper Motor Plate	
19	61199	Screw	
20	M411826	Snap Bushing	
21	44327401	Damper Motor Cover	
22	H96388178	Drive Wheel	Damper
23	H88900683	Spring Pin	Damper
24	44308101	Damper Motor	
25	H96388186	Drive Chain	
26	44256501	Steam Coil	CRN models
	M409833P	Steam Coil	All other models
27	H96382072P	Master Link	2 required
28	H88970256	Roll Pin	2 required
29	D501086	Screw	
30	800465	Washer	4 required
31	H96388079	Damper Shaft	
32	M400013	Washer	
33	70142	Nut	
34	44096401	Steam Damper Actuator	
35	44333001	Steam Damper Link	
36	44091501	Clevis Pin	4 required
37	44332901	Steam Damper Link	
38	44091601	Hairpin Cotter	4 required

© Copyright, Alliance Laundry Systems LLC – DO NOT COPY or TRANSMIT

Steam Valve

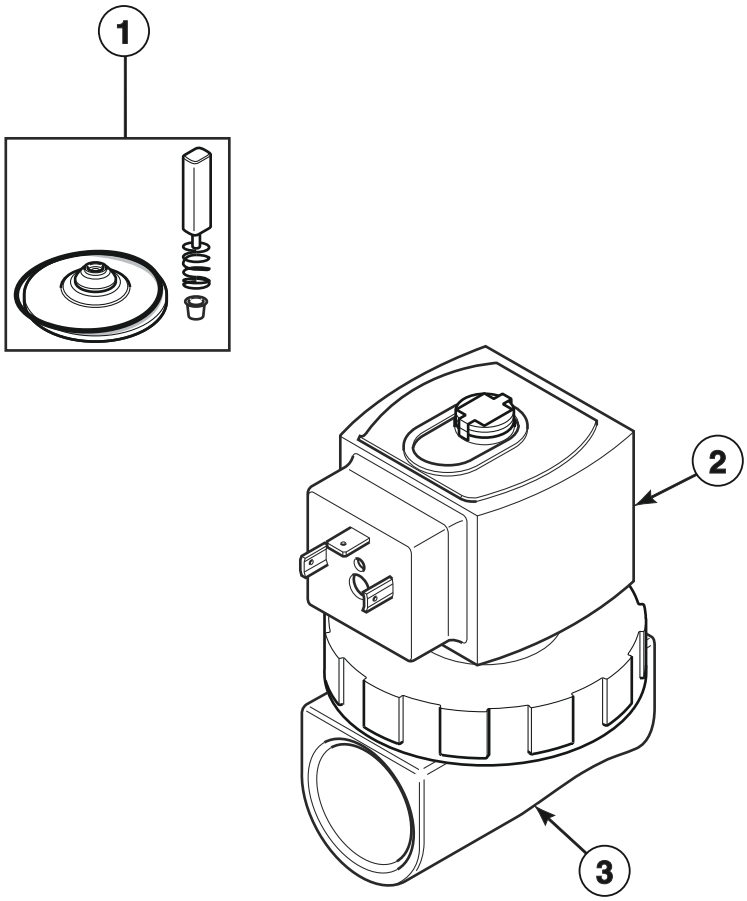

TMB3634P_70592101

© Copyright, Alliance Laundry Systems LLC – DO NOT COPY or TRANSMIT

Steam Valve

REF	PART NO.	DESCRIPTION	COMMENTS
	F8382301	DIN Valve Adapter KIt	
1	F8379502	Valve Rebuild Kit	
2	F8514601P	Coil	240 Volt
3	F8322906P	Valve	240 Volt

© Copyright, Alliance Laundry Systems LLC – DO NOT COPY or TRANSMIT

Control Tray

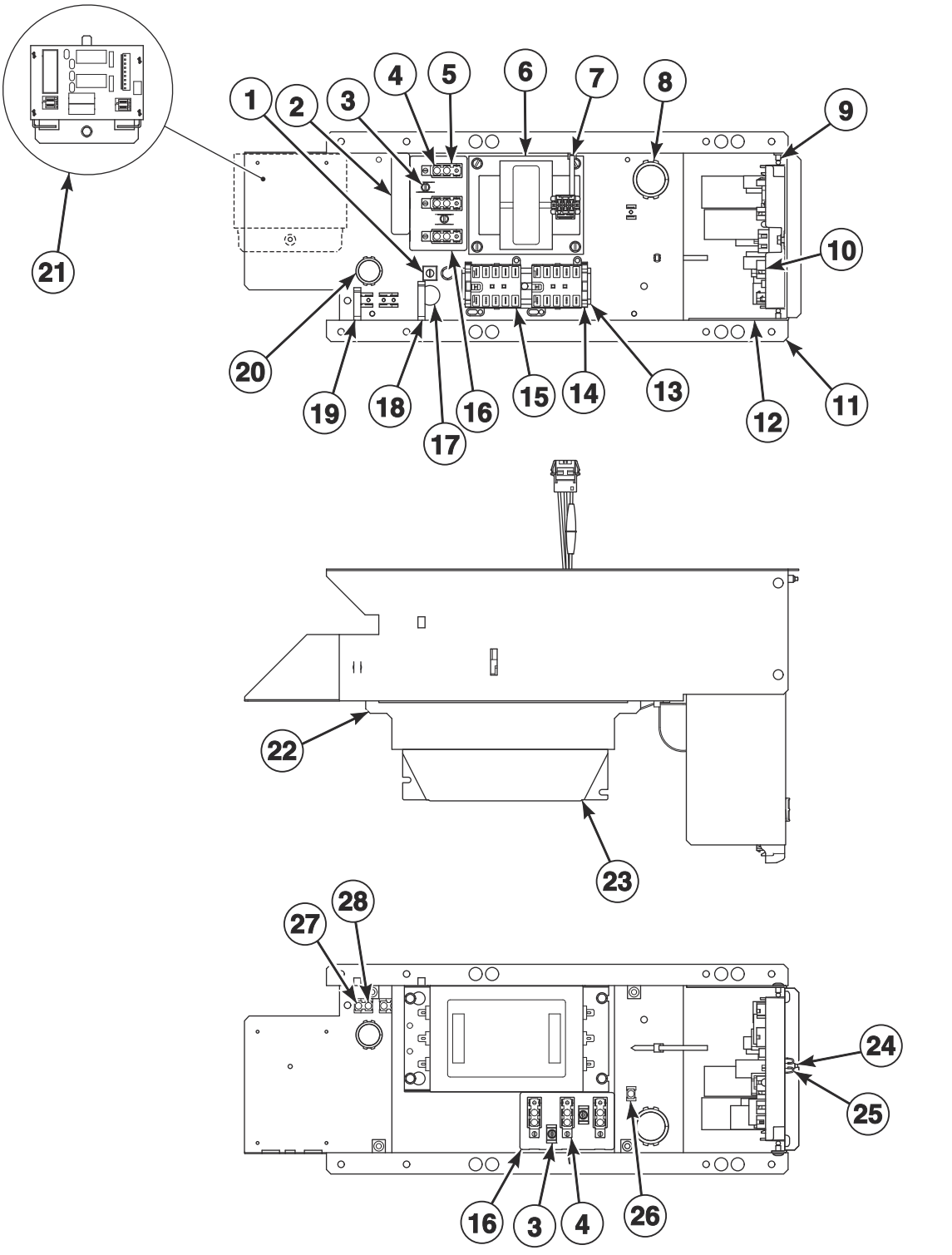

© Copyright, Alliance Laundry Systems LLC – DO NOT COPY or TRANSMIT

Control Tray

REF	PART NO.	DESCRIPTION	COMMENTS
	685837	Screw	Use with item 1
	44088001	Nut	Use with item 1
	204454	Ferrite	Korean models; Applied to motor wires
	44272104	Emergency Stop Interconnect Harness	Routes from emergency stop to control tray
	44357403	EMI Filter Kit	CSA models; 200-240 Volt
	44357402	EMI Filter Kit	CSA models; 380-480 Volt
1	M411283	Ground Lug Connector	
2	44286803	Label	L1, L2, L3
3	51783	Screw	
4	430642	Terminal Block	
5	70333001	Terminal Block Shield	
6	F8491101	Transformer	380-480 Volt
7	70335601	Cable Tie	
8	70346501	Bushing	
9	70058501	Pop Rivet	
10	70671701	I/O Control Assembly	
11	70492401	Control Tray	
12	70494901	Control Board Control Tray	
13	M412690	DIN Rail	
14	F8449801	End Stop	
15	70482601	Contactor	2 required
16	M413862	Insulator	
17	D516100	Label	
18	F8449501	Wire Clip	
19	F8449502	Wire Clip	
20	70178701	Snap Bushing	
21	70501801	Steam Control Assembly	Steam models
22	70533101	Filter Bracket	IEC models
23	F8591801	EMI Filter	IEC models; 200-240 Volt
	F8637501	EMI Filter	IEC models; 380-480 Volt
24	F8206901	Screw	
24	70030501	Expansion Clip	
25	00621SG	Male Tab Terminal	
27	M400003	Pop Rivet	
28	00622SG	Terminal	

© Copyright, Alliance Laundry Systems LLC – DO NOT COPY or TRANSMIT

Labels

PART NO.	DESCRIPTION	COMMENTS
44318601	Caution Label	Vent/install
F8614501	Danger Label	Shock; English/French
D516100	Label	Earth ground
F8614301	Hot Surface Warning Label	English/French
F8609001	Hot Surface Warning Label	Icon
F8611601	Warning Label	
44318600	Label Kit	Vent/install
F8614500	Label Kit	Shock
70534400	Label Kit	Fire
F8605500	Label Kit	
44321501	Notice Label	120/240 Volt
70539601	Notice Label	
D516073	Notice Label	Read instructions; Icon
70538401	Pinch Warning Label	English/French
F8615701	Pinch Warning Label	Icon
F8615702	Pinch Warning Label	Icon
F8614202	Shock Warning Label	Icon
70536401	Warning Label	Lint; Australian models
44324101	Warning Label	Fire; Australian models
70534405	Warning Label	Fire; Colombian Spanish; Australian models
70534401	Warning Label	Fire; English; Australian models
70534402	Warning Label	Fire; French; Australian models
44321601	Warning Label	Risk of fire; Icon
44324001	Warning Label	Shock/pinch
44324002	Warning Label	Shock/pinch

© Copyright, Alliance Laundry Systems LLC – DO NOT COPY or TRANSMIT

Harnesses

PART NO.	DESCRIPTION	COMMENTS
44316008	Harness	3 Phase; Auxiliary power distribution block to EMI filter
44356405	Control Tray Harness Assembly	Steam models
44356406	Control Tray Harness Assembly	Gas models
44334702	Inverter Contactor Coil Harness	Secondary
44316002	Harness	3 Phase; Main power distribution block to EMI filter
44280012	Motor Contactor Power Harness	3 Phase; EMI
44280003	Motor Contactor Power Harness	3 Phase
44280101	Power Harness	380-480 Volt
44272101	Power Harness	200-240 Volt

© Copyright, Alliance Laundry Systems LLC – DO NOT COPY or TRANSMIT

Notes

© Copyright, Alliance Laundry Systems LLC – DO NOT COPY or TRANSMIT

Parts Index

A

Access Panel Trim
70399404 27

Adapter
44178803 ..... 53, 55

Airflow Switch and Arm Bracket
70319602 51

Airflow Switch Arm
70319401 51

Airflow Switch Kit
70429601P 51

Airflow Switch Vane
70319201 51

B

Ball Bearing
44041901P 47

Bearing
M413923P 47

Bearing Mounting
44301701 43

Belt Guard
44169601 39
44169801 39
44264201 39
44264202 39
44314101 39
44314201 39

Blower Assembly
44267201 49

Blower Housing
44289701 37
44289801 37
44289901 37

Blower Housing Scroll
44290001 37

Blower Inlet Cone
44266902 37

Blower Motor Mounting Plate
44311301 49

Bolt
H8830143H 41
M400650 47
203798 35
44017901 35

Burner
M412025P 53, 55

Burner Hole Cover
44315201 ..... 53, 55

Burner Orifice
70684100 57
70684111 57
70684113 57
70684114 57
70684115 57
70684117 57
70684118 57
70684119 57
70684120 57
70684123 57
70684124 57
70684125 57
70684126 57
70684128 57
70684130 57
70684140 57
70684143 57
70684144 57
70684147 57
70684150 57

Bushing
F280409P 47
M413021 ..... 53, 55
M414459 59
70346501 ..... 23, 63

C

Cable Tie
M405829 53
70335601 63

Caution Label
44318601 64
44324201 53

Center Hinge Lug Assembly
70640401 33

Circuit Plug Housing, 1
44370401 45

Clevis Pin
44091501 59

Coil
F8514601P 61

Coil Filter
H96362264 59

Cold Weather Kit
44340301 23

Contact Base
F8538101 ..... 15, 19, 21

Contact Switch
F8069501 ..... 15, 19, 21

Contactor
70482601 63

Control
70511601 23

Control Assembly
70478804P 19
70478904P 19
70479801 15
70479901 15
70523004P 19
70523101 15
70543104 21

Control Board Control Tray
70494901 63

Control Box Base
44065301 23

Control Box Cover
44065201 23

N/A items do not appear in index.

© Copyright, Alliance Laundry Systems LLC – DO NOT COPY or TRANSMIT

Control Box Housing
44306701 23
Control Box Top
44307101 23
Control Bracket
44331005 ..... 15, 19
44331006B 15, 19
44331006DG 15, 19
44331006LG 15, 19, 21
44331006W 15, 19, 21
Control Cover
44330801B 13, 17
44330801* 13, 17, 21
44330802 ..... 13, 17, 21
44330803LG 13, 17, 21
44330804* 13, 17
44330805 ..... 13, 17
44330806DG 13, 17
44330810B 13, 17
44330810* 13, 17, 21
44330811 ..... 13, 17, 21
44330812LG 13, 17, 21
44330813* 13, 17
44330814 ..... 13, 17
44330815DG 13, 17
Control Harness
44334404 23
Control Tray
70492401 63
Control Tray Cover
70507501 39
Control Tray Harness Assembly
44334506 65
44356405 65
Control Trim
44016401 ..... 13, 17
44016403 ..... 13, 17
Cylinder and Trunnion Assembly
44054701 41
44054702 41
44192001 41
44192002 41
Cylinder Assembly
H96367545 41
M409826 41
44191101 41
44191102 41
Cylinder Rib
44158103 41
44158104 41
Cylinder Rib Assembly
44191204 41
Cylinder Shroud
44335501 37
44335601 37
44335701 37
44335801 37

D

Damper
H96387519 59
Damper Assembly
44280304 37
Damper Motor
44308101 59
Damper Motor Cover
44327401 59
Damper Motor Harness
44273606 59
Damper Motor Plate
44327501 59
Damper Shaft
H96388079 59
Danger Label
F8614501 64
DIN Rail
M412690 63
DIN Valve Adapter Kit
F8382301 61
Door Assembly
44028906P 29
44028907P 29
44058105P 29
44266701P 29
44292302B 29
44292302LGP 29
44354701 29
44354703 29
44354705 29
70407402P 29
Door Catch Kit
70482901 25
Door Glass
44008401P 29
44008402P 29
Door Glass Installation Tool
M4221P4 29
Door Glass Label
70650401 29
70707701 29
Door Handle
44007901 29
44263801 29
44370601 29
70521102 29
Door Hinge
44075207B 31
Door Hinge Assembly
44075201* 31
44075207LG 31
44075210 31
44366602LG 33
44366604 33
44366608 33
Door Hinge Lug Assembly
44035001 31
44035002 31
Door HingecAssembly
44366606W 33
Door Latch
M401223 25
Door Ring and Handle Assembly
44326007B 29
44326007LG 29
Door Ring Assembly
44326001 29
44326002 29
44326003B 29

N/A items do not appear in index.

© Copyright, Alliance Laundry Systems LLC – DO NOT COPY or TRANSMIT

44326004B 29
Door Ring Gasket
44008201P 29
70296802 29
Door Seal Kit
70211902P 29
Door Switch Actuator Kit
70215001P 31
Door Switch Cover
44316301 25
Door Switch Harness
44335203 25
Door Switch Shield
44316601 25
Door Switch Wire Channel
44286002 25
Drive Chain
H96388186 59
Drive Motor
44259701P 47
44259801P 47
Drive Rivet
M400713 23
Drive Wheel
H96388178 59

E

Elbow
F421107 55
Emergency Stop Harness
44272401 ..... 15, 19, 21
Emergency Stop Interconnect Harness
44272104 63
Emergency Stop Label
44012901 ..... 15, 19, 21
Emergency Stop Pushbutton
F200233500 ..... 15, 19, 21
EMI Filter
F8591801 63
F8637501 63
EMI Filter Kit
44357402 63
44357403 63
End Stop
F8449801 63
Exhaust Deflector
44290301 37
Exhaust Thimble Assembly
44305001 49
Expansion Clip
70030501 ..... 13, 17, 21, 63
Extension Spring
F8440701 47

F

Fan Motor
44259301P 49
44259401P 49
FCC-IC Label
F8613201 21
Felt Pad
M402144 37
Ferrite
204454 ..... 47, 49, 63
Fill Hose
202799 23
202800 23
Filter
44172101 59
Filter Bracket
70533101 63
Filter Channel
H96388087 59
Filter Mounting Plate
70551701 23
Flange Bearing
44048301P 43
Front Access Panel
44012707WP 27
44012709B 27
44012709DG 27
44012709LG 27
44012714 27
44367203 27
44367204W 27
Front Control Box
44311101 11
Front Panel
44291902 25
44291903DG 25
44291903LG 25
44291903W 25
44368501W 25
44368503 25

G

Gas Valve
44166701 53
44316801 55
44316802 55
Gas Valve Bracket
44245701 ..... 53, 55
Gas Valve Harness
44273501 53
44273503 55
Gas Valve Support Bracket
44317201 55
Gasket
44333402 55
Ground Lug Connector
M411283 63

H

Hairpin Cotter
44091601 59
Handle and Caps Assembly
44049903 35
70154417 35

N/A items do not appear in index.

© Copyright, Alliance Laundry Systems LLC – DO NOT COPY or TRANSMIT

Handle Bar
70399501B 29
Handle Bumper
70407204 35
70407212 35
Harness
F8617901 21
44316002 65
44316008 65
Harness Adapter Plate
70523301 59
Heater Assembly
44282600 55
High Altitude Orifice Kit
44357509 57
44357510 57
High Voltage Suppression Cable
44239704 53
Hinge Cam Kit
M4772P3 31
M4773P3 31
Hose
44073306 23
Hose Clamp
20391 ..... 53, 55
36801 23
Hose Fitting
44069101 23
Hot Surface Warning Label
F8609001 64
F8614301 64

I

ICM Harness
44334603 ..... 53, 55
Idler Shaft
44303101 47
Igniter Cover
70159601 ..... 53, 55
Ignition Control
70482001 53
70482002P 53, 55
Insulator
M413862 63
Interconnect Harness
44334401 23
Inverter Contactor Coil Harness
44334702 65
Inverter Motor Harness
44335306 47
44335307 49
I/O Control Assembly
70671701 63

J

J-Belt
44293702 47

K

Key
M400008 47
M405232 47
70155601 23
Kickplate
70117611 35
70117621 35

L

Label
D503887 53
D516100 ..... 63, 64
44190901 25
44286803 63
44318201 23
70414001 29
70472801 25
70537001 25
70537101 25
Label Kit
F8605500 64
F8614500 64
44318200 23
44318600 64
44324500 23
70534400 64
Light
801432 23
Limit Thermostat
44328002 49
44328102 ..... 53, 55
44328103 ..... 53, 55
70530905 49
Lint Hood
44290901 37
Lint Panel
44012301W 35
44012303LG 35
44012304DG 35
44012304LG 35
44012304W 35
44012306 35
44012307 35
Lint Panel Clip
44017801 35
Lint Screen
44063603P 37
Lint Screen Clip
H96418413 37
Lint Screen Support
44291001 37
44291002 37
44307901 37
Lock, Key and Nut Kit
70733701 23
Lower Hinge Gusset
70632002 33
Lower Lug Assembly
70639302 33

N/A items do not appear in index.

© Copyright, Alliance Laundry Systems LLC – DO NOT COPY or TRANSMIT

L.P. Conversion Kit
44328805 53
44328807 53
44330304 ..... 53, 55

M

Machine ID Control Assembly
203361P 17, 21
Magnet
70343101 35
Main Harness
44334202 11
Male Tab Terminal
00177 55
00621SG 63
Manifold
44079602 23
Master Link
H96382072P 59
Max Fill Line Label
70707501 29
Micro V Pulley
44302901 47
Mixing Valve
70519801 23
Mixing Valve Shield Bracket
44306601 23
Moisture Sensing Harness Kit
44344703 45
Moisture Sensor Harness
44333903 45
Motor Conduit Bracket
44317901 ..... 47, 49
Motor Contactor Power Harness
44280003 65
44280012 65
Motor Pivot Brace
44310701 47
Motor Pivot Bracket Weldment
44310601 47
Motor Pivot Plate Weldment
44311501 47
Motor Pulley
44267601 47
Mounting Bracket
44331101 21
Mounting Plate
44288401 35
44330901 ..... 15, 19, 21

N

Nameplate
F8443107 27
F8688001 27
F8688901 27
44010601 27
567887 27
70472001 27
Nameplate Overlay
44130401 27
70410201 27
Nipple
H85101608 55
H851016088 ..... 53, 55
H85101673 55
Notice Label
D516073 64
44321501 64
70535901 53
70539601 64
70544901 53
Nut
F8387701 43
H88412101 41
M400026 47
M400033 ..... 45, 47
M400034 49
M400977 ..... 13, 17, 21
M412334 41
M414215 29
20274 43
23951 59
29786 59
29787 25
44087101 35
44088001 ..... 29, 31, 33, 35, 37, 63
70030401 ..... 25, 27
70142 59

O

Overlay
70516801 13
70517801 13
70519001 13
70539101 13
70545501 13
70547501 13
70547801 17
70548801 17
70570601 17
70570801 17
70571401 17
70571601 17
70572401 17
70595401 21
70636401 17
70636501 13
70636801 13
70638301 17
70638801 13
70638901 17
70639001 21

P

Panel Locator
56079 39
Pinch Warning Label
F8615701 64
F8615702 64
70538401 64
Pipe Adapter Weldment
44315401 55

N/A items do not appear in index.

© Copyright, Alliance Laundry Systems LLC – DO NOT COPY or TRANSMIT

Pipe Bracket
44249301 ..... 53, 55
Pipe Cap
44087801 ..... 53, 55
Pipe Elbow
44249401 ..... 53, 55
Pipe Nipple
44249501 53
44252301 53
44252401 ..... 53, 55
70543501 55
Pipe Tee
44174201 ..... 53, 55
Pipe Union
M411419 ..... 53, 55
Plug
M400985 ..... 15, 19, 21
Pop Rivet
M400003 63
430725 ..... 15, 19, 21, 35
44166601 25
70058501 ..... 31, 33, 63
70126301 35
70126401 35
70412601 29
Porcelain Touch-Up Paint
122P4P 25
370P4P 25
Power Harness
44272101 65
44280101 65
Power Sensor Harness
44334408 23
Pressure Fitting
44231601 ..... 53, 55
Pulley
44289502 47
44289601 47
Push-to-Start Switch
801434W 23

R

Rear Panel
44265901 39
Rear Panel Brace
44311601 39
44311602 39
44311801 39
Rear Panel Support
44275801 39
44311701 39
44311702 39
Reducer
44342901 ..... 53, 55
Reed Switch Assembly
F8066804 35
Rib Wire
44208101 45
Rivet
70743501 35
Roll Pin
H88970256 59
Roller Catch
H87020202 35
Roller Catch Mounting Bracket
44014001 35

S

Screw
D501086 ..... 35, 59
F8206901 63
H88010574 59
H88012034 43
M400063 47
M400661 29
M402574 25
M405188 59
M411165 43
02422 59
38272 53
430497 ..... 11, 21, 23, 51, 53, 55
430757 ..... 35, 51
431287 ..... 25, 37
44338901 45
44349101 ..... 31, 33
51780 ..... 23, 37, 53, 55
51782 ..... 53, 55
51783 ..... 53, 55, 63
61199 59
685837 63
70033502 31
70182601 ..... 25, 27
70187201 47
70275801 39
70409801 31
70442101 ..... 29, 31, 35, 37, 45
70640201 33
70640301 33
800462 43
800930 ..... 13, 17, 21
802822 33
804608 ..... 13, 17, 21, 23
808210 59
Sensor Harness
44334407 23
Shaft Actuator Assembly
44332701 59
Shaft Collar
M414451 59
Shield
44326801 23
Shock Warning Label
F8614201 23
F8614202 64
F8614401 23
Slip Ring Assembly
44222702 45
Snap Bushing
M400770 ..... 53, 55
M411826 59
70178701 ..... 11, 63
Spacer
M401402 ..... 41, 43
Spark Electrode
44328701P 53, 55

N/A items do not appear in index.

© Copyright, Alliance Laundry Systems LLC – DO NOT COPY or TRANSMIT

Spray Paint
298P4P 25
Spring Pin
H88900683 59
Spud Holder Weldment
44390002 ..... 53, 55
Steam Adapter Kit
44314801 59
Steam Coil
M409833P 59
M409834P 59
44256501 59
44256601 59
Steam Coil Support
M411550 59
Steam Control Assembly
70501801 63
Steam Cover
44115101 59
Steam Damper Actuator
44096401 59
Steam Damper Counterweight
44332601 59
Steam Damper Link
44332901 59
44333001 59
Steam Filter Top Hinge Assembly
44088101 59
Steam Heater Assembly
44316901 59
44317101 59
Steam Valve Harness
F8520703 59
Stove Limit Bypass Harness
70564302 59
Stove Limit Harness
70564304 ..... 53, 55
Stove Limit Harness Bracket
431078 ..... 53, 55
Support Bracket
44310901 23
Support Shelf
44305801 37
44305802 37
Switch
44312401 25
70411901 51
Switch Bracket
44296301 35
70356301 51

T

Terminal
00622SG 63
Terminal Block
430642 63
Terminal Block Shield
70333001 63
Thermistor
M414704 49
44064701 37
Thermistor Plate
44068101 37
44068102 37
Thermostat Cover
M414477 ..... 53, 55
Thermostat Opening Cover
44312501 53
Top Access Panel Gusset
44028301DG 37
44028301* 37
44028302DG 37
44028302* 37
Transformer
F8491101 63
Trunnion Assembly
44240801 41
44240802 41
44375001P 47
Trunnion Housing
M413826P 47

U

Upper Hinge Gusset
44376501 33
Upper Hinge/Wire Cover Bracket
44368702 25
Upper Lug Assembly
70639301 33
USB IR Interface Kit
203346 21
USB-Serial Interface Assembly
203440 21

V

Valve
F8322906P 61
Valve Rebuild Kit
F8379502 61
V-Belt
44309401 47

W

Warning Label
F8611601 64
44321601 64
44324001 64
44324002 64
44324101 64
44324501 23
44324502 23
70534401 64
70534402 64
70534405 64
70536401 64
Washer
F431125 35
M400013 59
M400080 35
M400991 49

N/A items do not appear in index.

© Copyright, Alliance Laundry Systems LLC – DO NOT COPY or TRANSMIT

03815 ..... 13, 17, 21
20103 47
44238902 45
70261401 ..... 41, 43, 47
70409301 29
800465 ..... 25, 27, 59
Water Valve Harness
44334405 23
Wire Clip
F8449501 63
F8449502 63
Wireless Network Board Harness
F8536002 21
Wireless Network Control Assembly
203532 11
Wireless Network Kit
70596301 ..... 11, 21
Wireway Channel
44239002 45

N/A items do not appear in index.

© Copyright, Alliance Laundry Systems LLC – DO NOT COPY or TRANSMIT