Tumble Dryers

30 Pound Capacities

18 Digit Model Numbers with 4 and 5 in 13th Position

Refer to Page 3 for Model Numbers

Parts

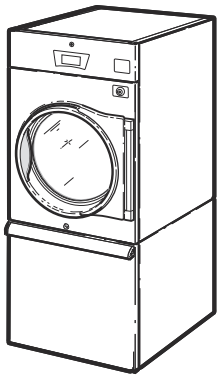

TMB1288C_70614301

Alliance™ Laundry Systems

www.alliancelaundry.com

Part No. 70614301R10
October 2025

Table of Contents

Title	Page
Parts Ordering Information	2
Serial Plate Location	2
Machine Identification	3
Product Overview - Heat Source and Voltage	4
Touch Control - Vend Models with V in the 7th Position	6
Touch Control - OPL Models with V in the 7th Position	8
Coin Drops	10
Coin Drop Kits	12
Central Pay and Card Reader Components	14
Door and Hinge Components - Design 4 H and S Models	16
Door and Hinge Components - Design 5 Models	18
Control Panels and False Fronts	20
Front Panel Assemblies - Design 4 H and S Models	22
Front Panel Assemblies - Design 5 Models	24
Cabinet Front Components	26
Emergency Stop Button - OPL Models	28
Lower Cabinet Components	30
Cylinder and Trunnion Assembly	32
Cylinder Components	34
Cabinet Components	36
Fire Suppression System Components	38
Fire Suppression System Control Box	40
Motor Components	42
Blower and Exhaust Components	44
Airflow Switch	46
Gas Heater Components	48
Burner Orifices	50
Electric Heater Components	52
Steam Heater Components	54
Control Tray	56
Accessory Box - Electric 200-240 Volt Models	58
Accessory Box - Electric 380-480 Volt Models	60
Harnesses	62
Labels	63
Parts Index	65

© Copyright 2025, Alliance Laundry Systems LLC

All rights reserved. No part of the contents of this book may be reproduced or transmitted in any form or by any means without the expressed written consent of the publisher.

Parts Ordering Information

If literature or replacement parts are required, contact the source from whom the machine was purchased or contact Alliance Laundry Systems at (920) 748-3950 for the name and address of the nearest authorized parts distributor.

For technical assistance, call the number listed below:

(920) 748-3121 Ripon, Wisconsin

Serial Plate Location

When calling or writing about your product, be sure to mention model and serial numbers. Model and serial numbers are located on serial plate(s) as shown.

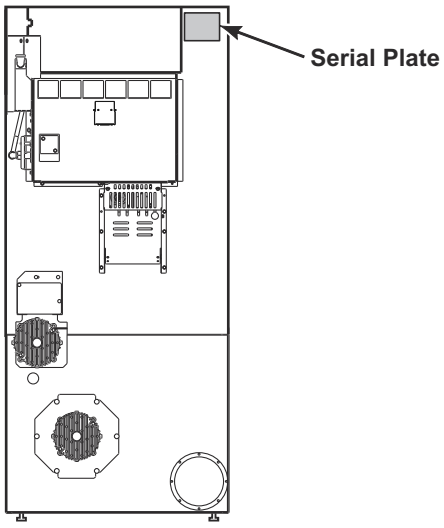

TMB3500P_70614301

© Copyright, Alliance Laundry Systems LLC – DO NOT COPY or TRANSMIT

Machine Identification

Information in this manual is applicable to these machines:

BG030D
BG030E
BG030F
BG030L
BG030N
BG030R
BG030S
BR030E
BR030S
BU030E
BU030F
BU030L
BU030N
BU030R
BU030S

HA030E
HA030F
HA030L
HA030N
HA030R
HA030S
HG030D
HG030E
HG030F
HG030L
HG030N
HG030R
HG030S
HH030E
HH030F
HH030L
HH030N
HH030R
HH030S

HJ030D
HJ030E
HJ030F
HJ030L
HJ030N
HJ030R
HJ030S
HK030E
HK030F
HK030L
HK030N
HK030R
HL030E
HL030L
HR030E
HR030S
HT030E
HT030F
HT030L
HT030N
HT030R
HT030S
HU030E
HU030F
HU030L
HU030N
HU030R
HU030S

JU030E
JU030N
PG030E
PG030L
PG030N
PG030S
PR030E
PR030S
PU030E
PU030L
PU030N
PU030S

SA030E
SA030F
SA030L
SA030N
SA030R
SA030S
SG030D
SG030E
SG030F
SG030L
SG030N
SG030R
SG030S
SH030E
SH030F
SH030L
SH030N
SH030R
SH030S
SJ030D
SJ030E
SJ030F
SJ030L
SJ030N
SJ030R
SJ030S

SK030E
SK030F
SK030L
SK030N
SK030R
SL030E
SL030L
SR030E
SR030S
ST030E
ST030F
ST030L
ST030N
ST030R
ST030S
SU030E
SU030F
SU030L
SU030N
SU030R
SU030S

© Copyright, Alliance Laundry Systems LLC – DO NOT COPY or TRANSMIT

Product Overview - Heat Source and Voltage

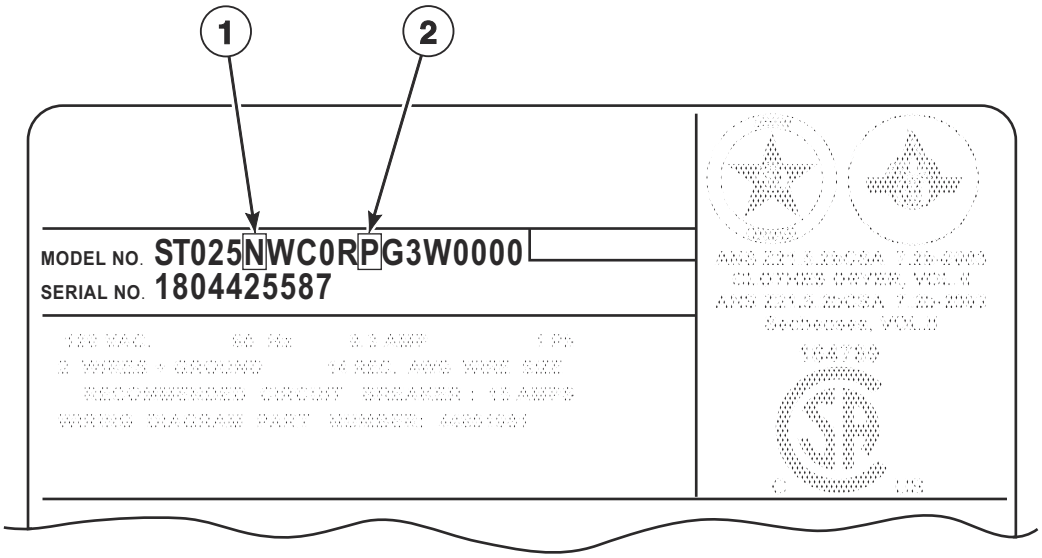

TMB3501P_70614301

© Copyright, Alliance Laundry Systems LLC – DO NOT COPY or TRANSMIT

Product Overview - Heat Source and Voltage

REF	PART NO.	DESCRIPTION	COMMENTS
1	-	Heat Source	D: Liquid Petroleum Gas (L.P) E: Electric F: Reduced Electric (Eco Line) L: Liquid Petroleum Gas (L.P.) N: Natural Gas (N.G.) R: Reduced Gas, Natural Gas (Eco Line) S: Steam
2	-	Voltage	B: 100-120 Volt/50-60 Hertz/1 Phase; Gas and steam models D: 200-208 Volt/50-60 Hertz/1 Phase; Electric models E: 230-240 Volt/50-60 Hertz/1 Phase; Electric models F: 200-208 Volt/50-60 Hertz/3 Phase; Electric models G: 230-240 Volt/50-60 Hertz/3 Phase; Electric models H: 380 Volt/50-60 Hertz/3 Phase; Electric models J: 400-415 Volt/50-60 Hertz/3 Phase; Electric models K: 440 Volt/50-60 Hertz/3 Phase; Electric models L: 460-480 Volt/50-60 Hertz/3 Phase; Electric models N: 440-480 Volt/50-60 Hertz/3 Phase; Gas and steam models P: 380-415 Volt/50-60 Hertz/3 Phase; Gas and steam models X: 200-240 Volt/50-60 Hertz/1-3 Phase; Gas and steam models

© Copyright, Alliance Laundry Systems LLC – DO NOT COPY or TRANSMIT

Touch Control - Vend Models with V in the 7th Position

B, H P and S Models

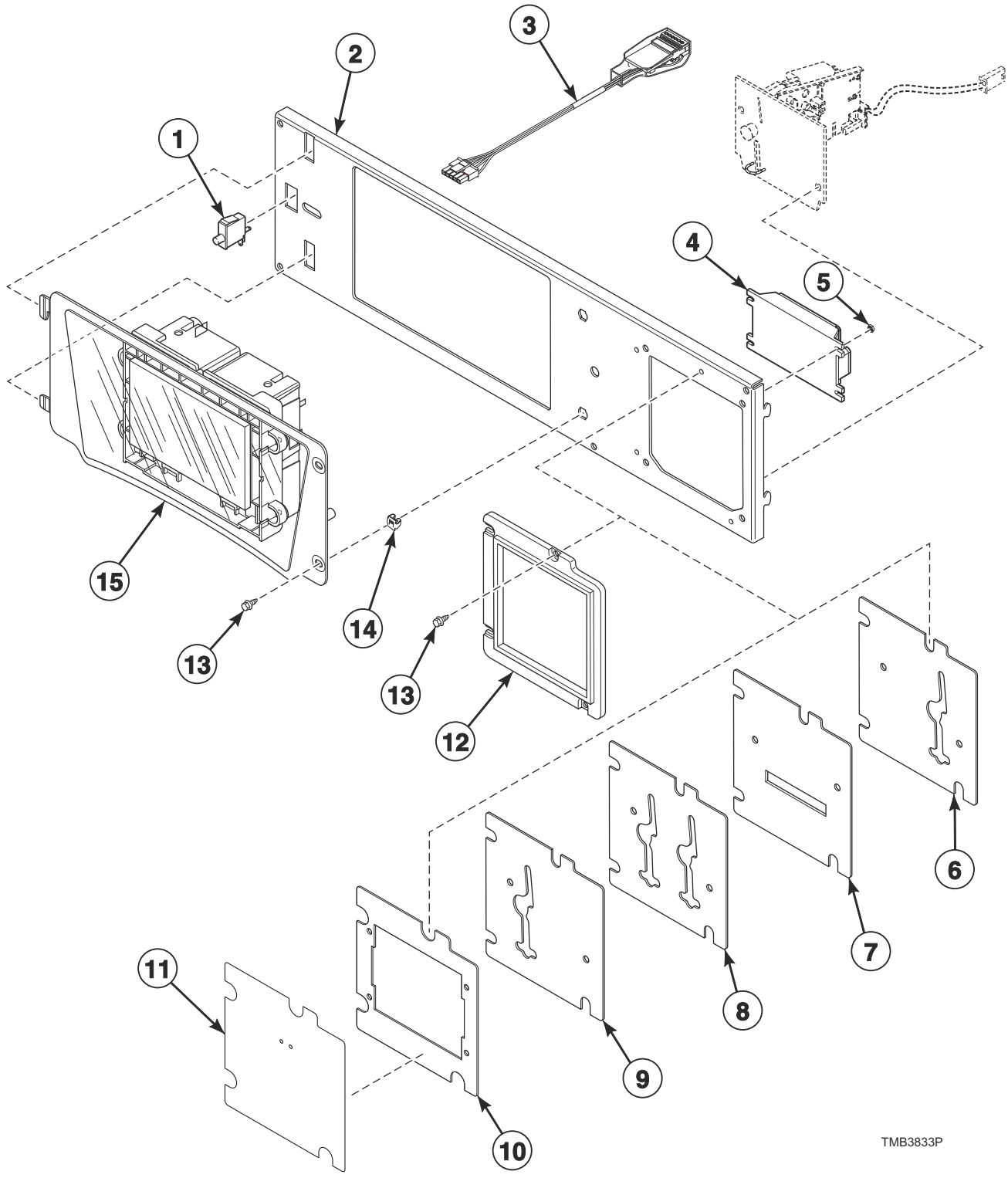

© Copyright, Alliance Laundry Systems LLC – DO NOT COPY or TRANSMIT

Touch Control - Vend Models with V in the 7th Position

REF	PART NO.	DESCRIPTION	COMMENTS
	44334002	Vend Activation Harness	
	F8719302	Fob Communication Harness	
	44087101	Nut	2 required
	204692	Wireless Control Label	2 required
	203440	USB-Serial Interface Assembly	
	44374701	App Pay Overlay Kit	
	F8647701P	Control Screen Replacement Kit	
1	70413301	Pushbutton Switch	
2	70598601	Control Mounting Bracket	Design 4 H and S models
3	203361P	Machine ID Control Assembly	
4	205135	Fob Reader Control Assembly	
5	70054	Nut	
6	F8574205	Accessory Plate Assembly	World drop
7	F8574204	Card Reader Plate	Card
8	F8574203	Accessory Plate Assembly	Dual drop
9	F8574202	Accessory Plate Assembly	Single drop
10	F8734601	Accessory Plate Assembly	FOB
11	F8734001	Overlay	S models; FOB
	F8734301	Overlay	H models; FOB
	F8736601	Overlay	H models; Citron; FOB
12	F8632501	Vend Plate	
13	39733	Screw	
14	70030501	Expansion Clip	2 required
15	70697001P	Control Assembly	

© Copyright, Alliance Laundry Systems LLC – DO NOT COPY or TRANSMIT

Touch Control - OPL Models with V in the 7th Position

B, J and P Models

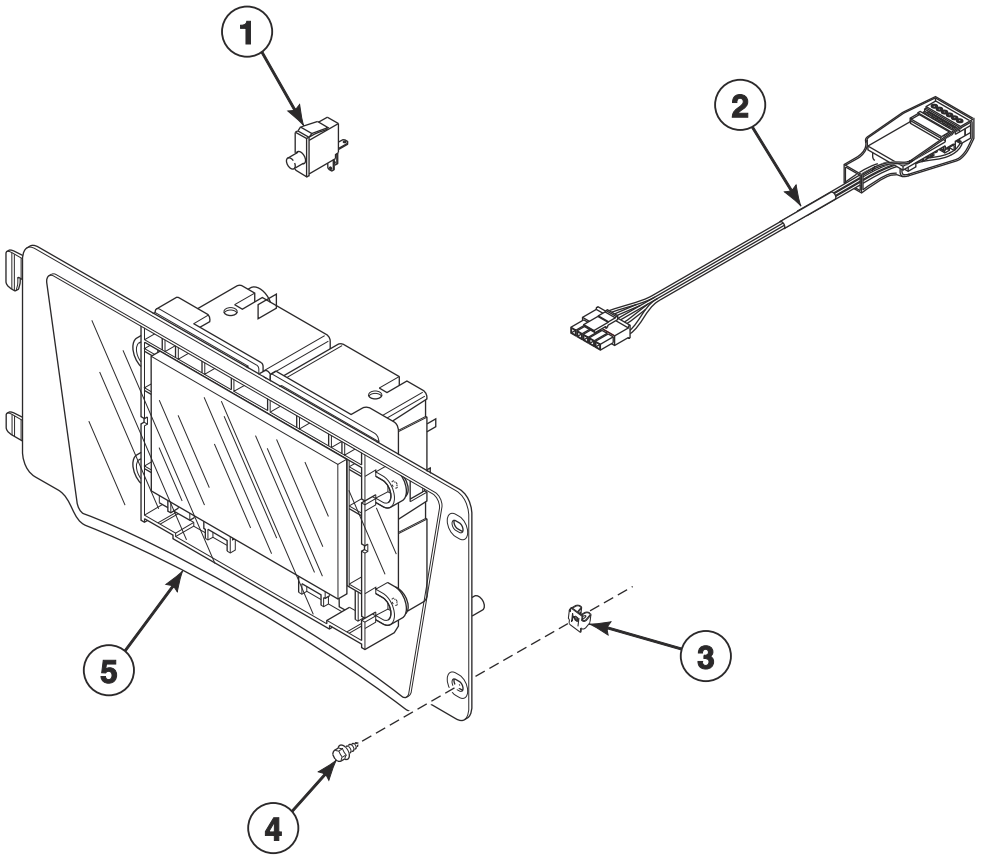

TMB3828P_70614301

© Copyright, Alliance Laundry Systems LLC – DO NOT COPY or TRANSMIT

Touch Control - OPL Models with V in the 7th Position

REF	PART NO.	DESCRIPTION	COMMENTS
	44334002	Vend Activation Harness	
	44087101	Nut	2 required
	204692	Wireless Control Label	2 required
	203440	USB-Serial Interface Assembly	
	44374701	App Pay Overlay Kit	
	F8647701P	Control Screen Replacement Kit	
1	70413301	Pushbutton Switch	
2	203361P	Machine ID Control Assembly	
3	39733	Screw	
4	70030501	Expansion Clip	2 required
5	70597803	Control Assembly	

© Copyright, Alliance Laundry Systems LLC – DO NOT COPY or TRANSMIT

Coin Drops

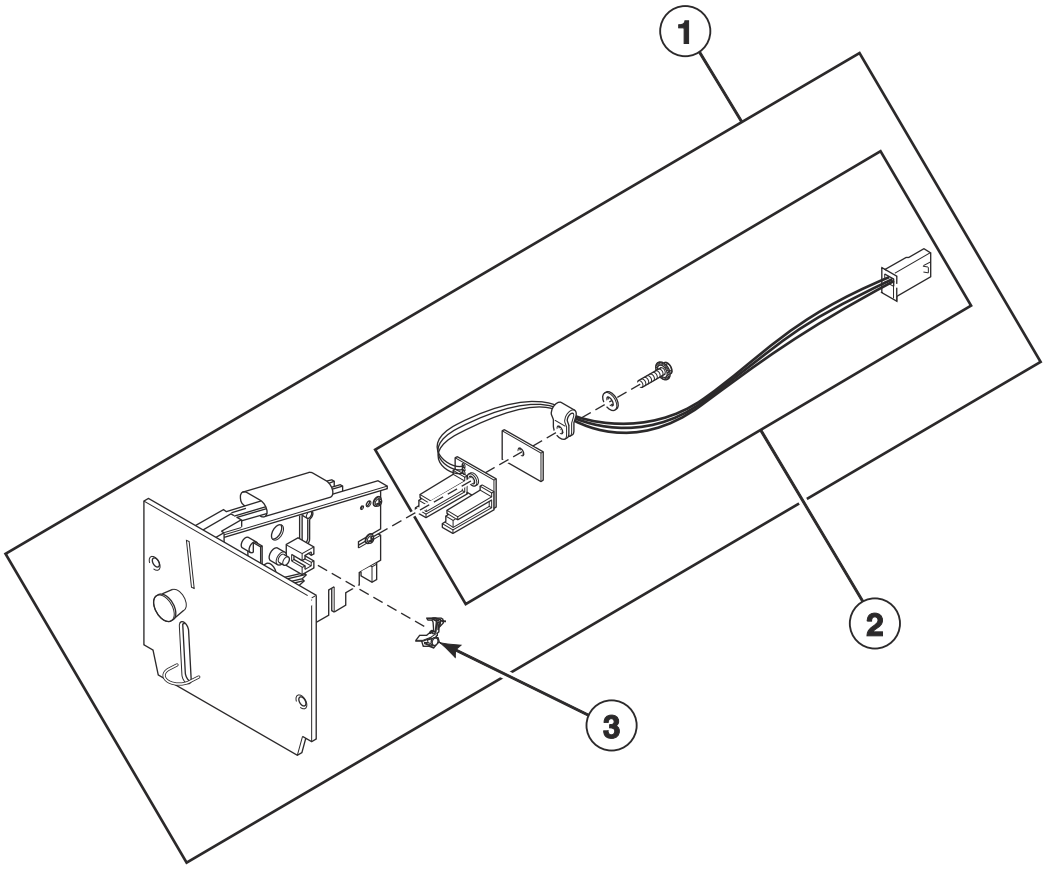

TMB3699P_70614301

© Copyright, Alliance Laundry Systems LLC – DO NOT COPY or TRANSMIT

Coin Drops

REF	PART NO.	DESCRIPTION	COMMENTS
1	70441601P	Coin Drop	Single; U.S.A.; $.25
	38475	Coin Drop Assembly	Single; Japan; 100 yen
	38464P	Coin Drop Assembly	Single; Canada; .25
	CK077	Coin Drop Kit	Single; Taiwan; 10 NT
	70506901	Coin Drop Assembly	Single; Singapore; $1.00 NEW
	70441603	Coin Drop	Dual; U.S.A.; $.25 and $1.00
	38519	Coin Drop Assembly	Dual; Japan; 100 yen and 500 yen
	70441602	Coin Drop Assembly	Dual; Canada; .25 and 1.00
	38467	Coin Drop Assembly	Dual; Australia; $0.20 and $1.00
	70447301	Coin Drop Assembly	Dual; Australia; $1.00 and $2.00
	70283102	Coin Drop Assembly	Dual; 0.20 and 0.50 Euro
	210195	Coin Drop Assembly	Dual; 0.20 and 1.00 Euro
	210196	Coin Drop Assembly	Dual; 0.50 and 1.00 Euro
	F0160737-00	Coin Meter	Dual; 0.50 and 2.00 Euro
	70281102	Coin Drop Assembly	Dual; Taiwan; 10 and 50 NT
	70482401	Coin Drop Assembly	Dual; New Zealand ; $1.00 and $2.00
	38462P	Coin Drop Assembly	Single; Token; STD 118-1
	38463	Coin Drop Assembly	Single; Token; STD 118-5
	38963P	Coin Drop	Single; Token STD 118-16
	CK097	Coin Drop Kit	Single; Jeton 08MS
	201141	Coin Drop Assembly	Single; Token; Jeton wh121
	70471601	Coin Drop Assembly	Single; Token; 7K
	70513310	Electronic Coin Drop Assembly	Japan and Thailand coins
	70513304	Electronic Coin Drop Assembly	Australia, New Zealand, Hong Kong and South Korea coins
	70513303	Electronic Coin Drop Assembly	Denmark, Norway and Euro coins
	70513306	Electronic Coin Drop Assembly	Mexico, Ecuador and U.S.A. coins
	70294107	Electronic Coin Drop Assembly	Lithuania, Latvia and Euro coins
	70513311	Electronic Coin Drop Assembly	China and Malaysia coins
	70513318	Electronic Coin Drop Assembly	South African 1, 2 and 5 rand coins
	70513309	Electronic Coin Drop Assembly	Euro coins
	70513312	Electronic Coin Drop Assembly	Russia coins
	70513313	Electronic Coin Drop Assembly	Phillipines coins
	70513314	Electronic Coin Drop Assembly	Thailand coins
	70513315	Electronic Coin Drop Assembly	Chile coins
	70513316	Electronic Coin Drop Assembly	Singapore coins
2	200674P	Opto Coupler	
3	201595P	Wire Guard	

© Copyright, Alliance Laundry Systems LLC – DO NOT COPY or TRANSMIT

Coin Drop Kits

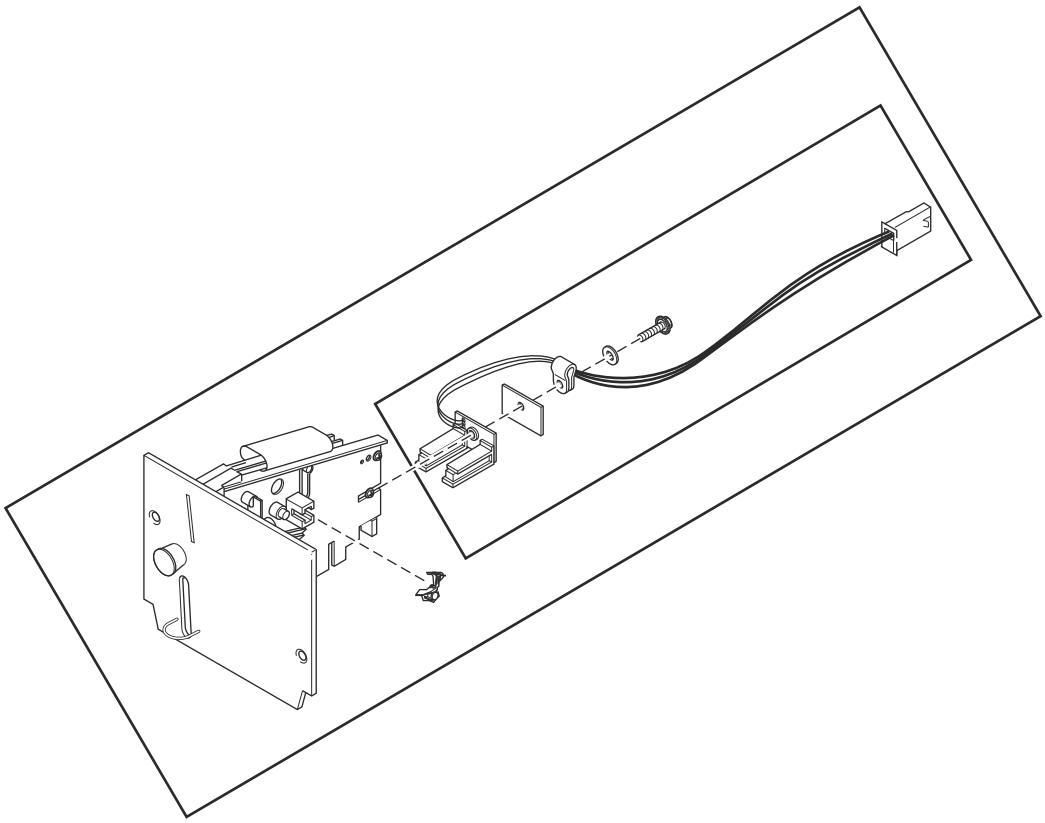

TMB3699PA_70614301

© Copyright, Alliance Laundry Systems LLC – DO NOT COPY or TRANSMIT

Coin Drop Kits

REF	PART NO.	DESCRIPTION	COMMENTS
	CK115	Electronic Coin Drop Kit	United States and Canada
	CK099	Electronic Coin Drop Kit	Australia (default), New Zealand, Hong Kong, South Korea and Malaysia
	CK100	Electronic Coin Drop Kit	United Kingdom (default) and Europe
	CK101	Electronic Coin Drop Kit	Europe (default), Denmark and Norway
	CK125	Electronic Coin Drop Kit	South Africa
	CK109	Electronic Coin Drop Kit	Euro
	CK110	Electronic Coin Drop Kit	Mexico (default), Ecuador and United States
	CK113	Electronic Coin Drop Kit	Japan and Taiwan
	CK116	Electronic Coin Drop Kit	Malaysia (default) and China
	CK117	Electronic Coin Drop Kit	Russia
	CK118	Electronic Coin Drop Kit	Philippine
	CK119	Electronic Coin Drop Kit	Thailand
	CK120	Electronic Coin Drop Kit	Chile
	CK121	Electronic Coin Drop Kit	Singapore
	CK122	Coin Drop Kit	New Zealand; 1.00 and 2.00

© Copyright, Alliance Laundry Systems LLC – DO NOT COPY or TRANSMIT

Central Pay and Card Reader Components

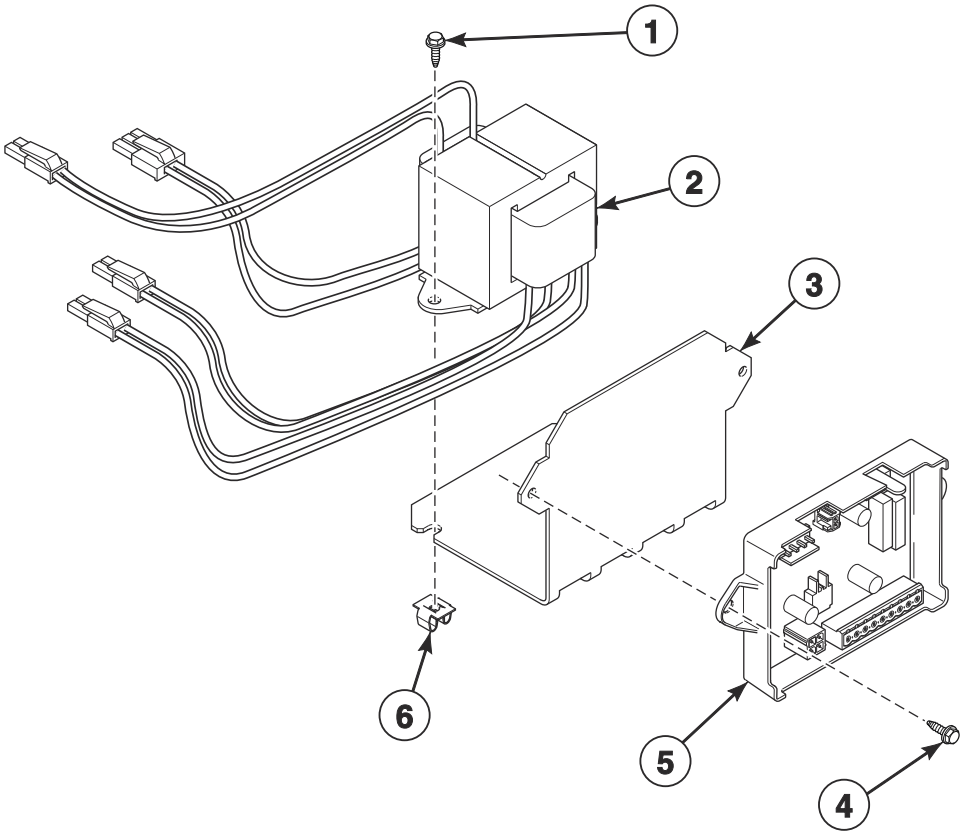

TMB3707P_70614301

© Copyright, Alliance Laundry Systems LLC – DO NOT COPY or TRANSMIT

Central Pay and Card Reader Components

REF	PART NO.	DESCRIPTION	COMMENTS
	44355601	Central Pay Harness	Routes from central pay board to contol tray
	44272301	Transformer Harness	100-120 Volt; Routes from transformer to I/O Control Assembly; Card and central pay
	44272302	Transformer Harness	200-480 Volt; Routes from transformer to I/O Control Assembly; Card and central pay
	44355604	Central Pay Board Harness	Routes from central pay board to transformer
	44355606	Central Pay Harness	Routes from central pay board to front end control
	203346	USB IR Interface Kit	
	70666801	Fob Reader Kit	Through 12/31/20
	70666806	Fob Reader Kit	Starting 1/1/21
1	M411072	Screw	
2	202757	Transformer	100-120 Volt; Card and central pay
	202758	Transformer	200-480 Volt; Card and central pay
3	70604001	Mounting Bracket	
4	51780	Screw	2 required
5	70612702	Central Pay Kit	100-120 Volt
	70612704	Central Pay Kit	200-480 Volt
6	70030501	Expansion Clip	2 required

© Copyright, Alliance Laundry Systems LLC – DO NOT COPY or TRANSMIT

Door and Hinge Components - Design 4 H and S Models

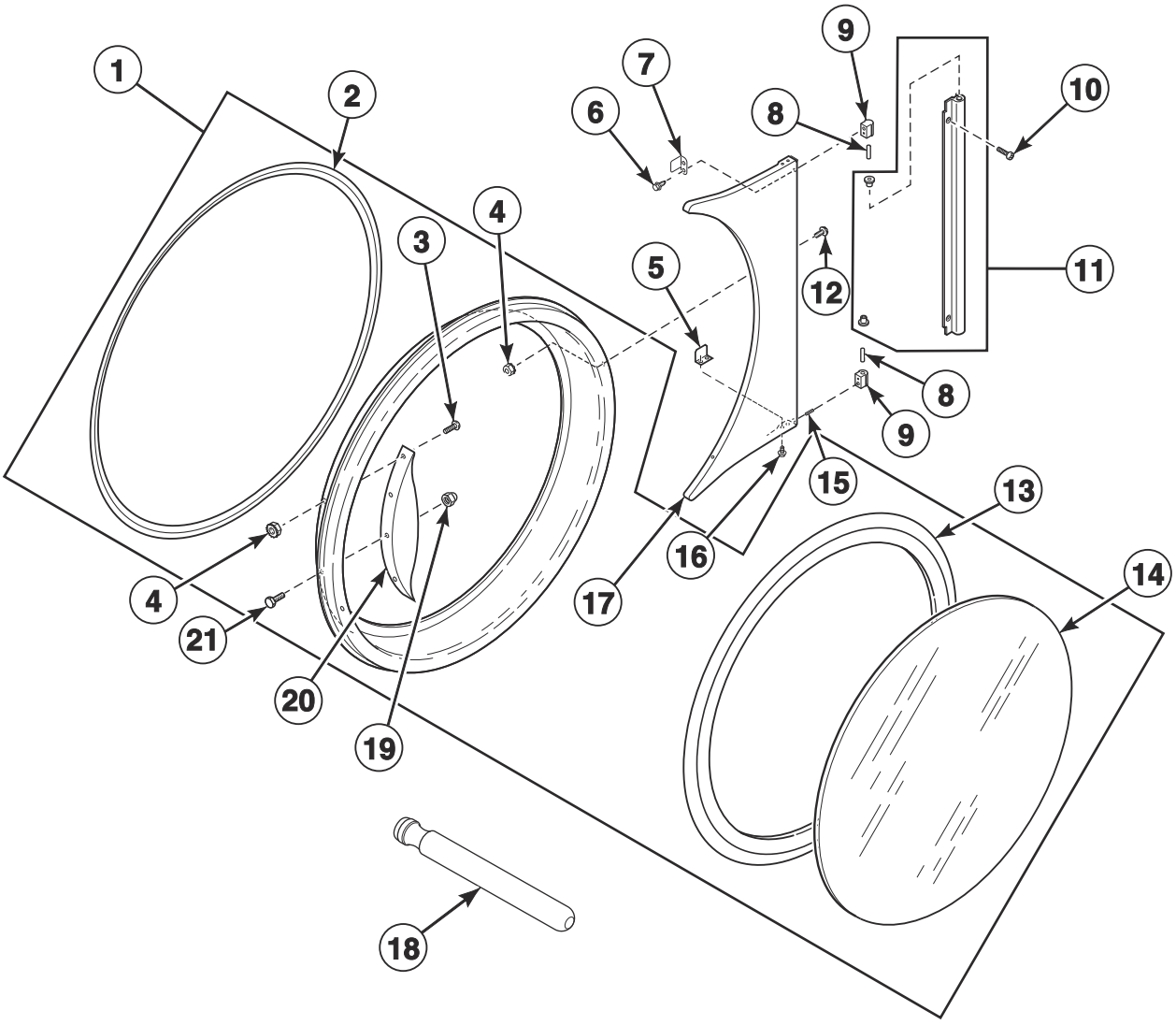

TMB3690P_70614301

© Copyright, Alliance Laundry Systems LLC – DO NOT COPY or TRANSMIT

Door and Hinge Components - Design 4 H and S Models

REF	PART NO.	DESCRIPTION	COMMENTS
	70650401	Door Glass Label	H models
	70707701	Door Glass Label	S models
	70707501	Max Fill Line Label	
1	70597702	Door Assembly	Chrome
2	70296801	Door Ring Gasket	
3	70442101	Screw	4 required
4	44088001	Nut	
5	70727901	Door Switch Actuator	Bottom
6	70576101	Screw	
7	70532105	Door Switch Actuator	Top
8	70071401	Pin	
9	70622401	Hinge Cam Kit	Chrome
10	FR004022	Screw	
11	70601008	Door Hinge Lug Assembly	Chrome
12	44349101	Screw	
13	70211901P	Door Glass Seal Kit	Use Loctite 414 for seal
14	M400784P	Door Glass	
15	70436301	Screw	
16	70058501	Pop Rivet	
17	70595501	Door Hinge	Chrome
18	M4221P4	Door Glass Installation Tool	
19	M414215	Nut	For door strike; Mounts between door strike screw and door handle
20	44007902P	Door Handle	
21	M400661	Screw	Door Strike

© Copyright, Alliance Laundry Systems LLC – DO NOT COPY or TRANSMIT

Door and Hinge Components - Design 5 Models

BG, BR, BU, HG, HT, JU, PG, PR, PU, SG and ST Models

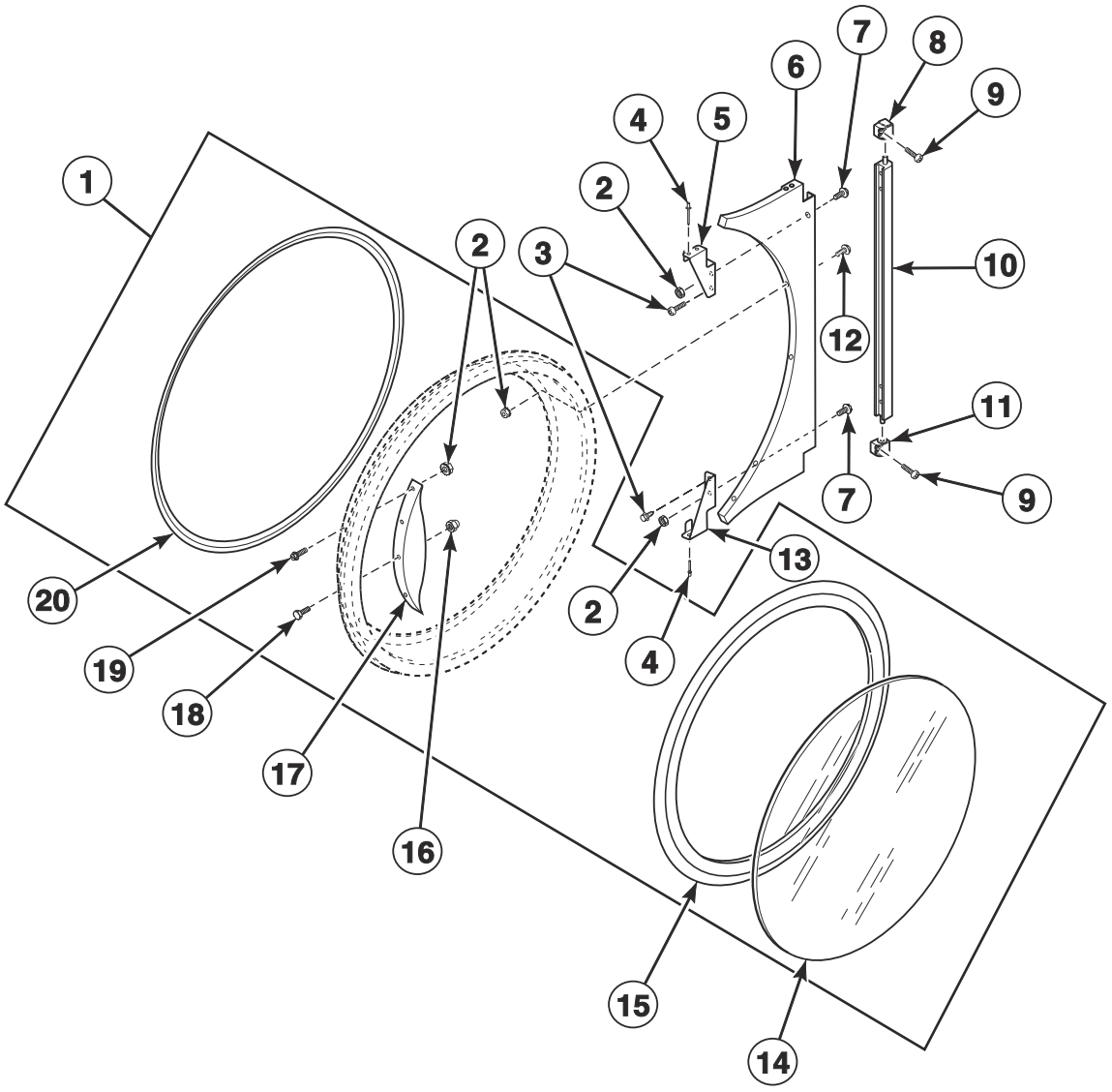

TMB3805P_70614301

© Copyright, Alliance Laundry Systems LLC – DO NOT COPY or TRANSMIT

Door and Hinge Components - Design 5 Models

REF	PART NO.	DESCRIPTION	COMMENTS
	70650401	Door Glass Label	H models
	70707701	Door Glass Label	S models
	70707501	Max Fill Line Label	
1	70597702	Door Assembly	Chrome; H and S models
	70597709	Door Assembly	Black; B, J and P models
2	44088001	Nut	
3	802822	Screw	
4	70058501	Pop Rivet	
5	70632001	Upper Hinge Gusset	
6	70632701W	Door Hinge	White; H and S models
	70632703	Door Hinge	Stainless steel; H and S models
	70632707	Door Hinge	Chrome; H and S models
	70632709B	Door Hinge	Black; B, J and P models
7	70640201	Screw	
8	70639301	Upper Lug Assembly	Use with 2 of item 9; H and S models
	70639303	Upper Lug Assembly	Use with 2 of item 9; B, J and P models
9	70640301	Screw	H and S models
	F8458801	Screw	B, J and P models
10	70640402	Center Hinge Lug Assembly	
11	70639302	Lower Lug Assembly	Use with 2 of item 9; H and S models
	70639304	Lower Lug Assembly	Use with 2 of item 9; B, J and P models
12	44349101	Screw	
13	70632002	Lower Hinge Gusset	
14	M400784P	Door Glass	
15	70211901P	Door Glass Seal Kit	Use Loctite 414 for seal
16	M414215	Nut	For door strike; Mounts between door strike screw and door handle
17	44007902P	Door Handle	
18	M400661	Screw	Door Strike
19	70442101	Screw	4 required
20	70296801	Door Ring Gasket	

© Copyright, Alliance Laundry Systems LLC – DO NOT COPY or TRANSMIT

Control Panels and False Fronts

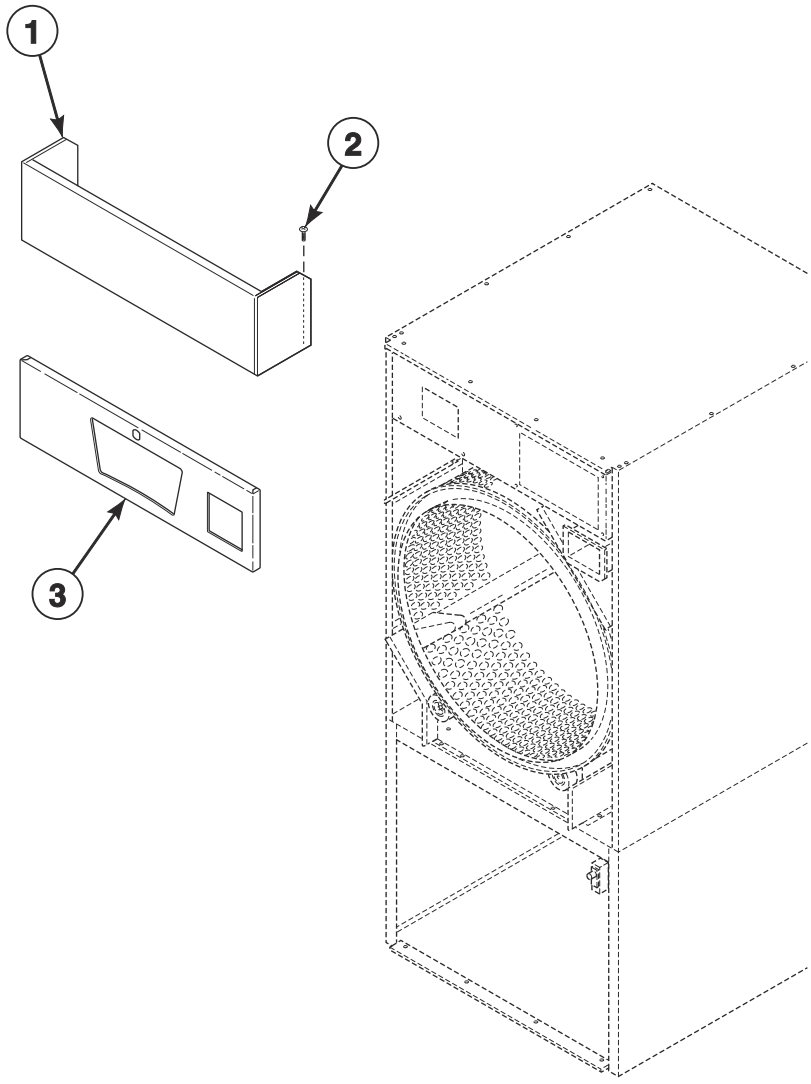

TMB3692P_70614301

© Copyright, Alliance Laundry Systems LLC – DO NOT COPY or TRANSMIT

Control Panels and False Fronts

REF	PART NO.	DESCRIPTION	COMMENTS
1	70000504	False Front	72 inches; Stainless steel
	70024204	False Front	76 inches; Stainless steel
2	M405188	Screw	4 required
3	70582901	Control Panel	Stainless steel; Coin/card
	70582902	Control Panel	Stainless steel; Central pay and OPL

© Copyright, Alliance Laundry Systems LLC – DO NOT COPY or TRANSMIT

Front Panel Assemblies - Design 4 H and S Models

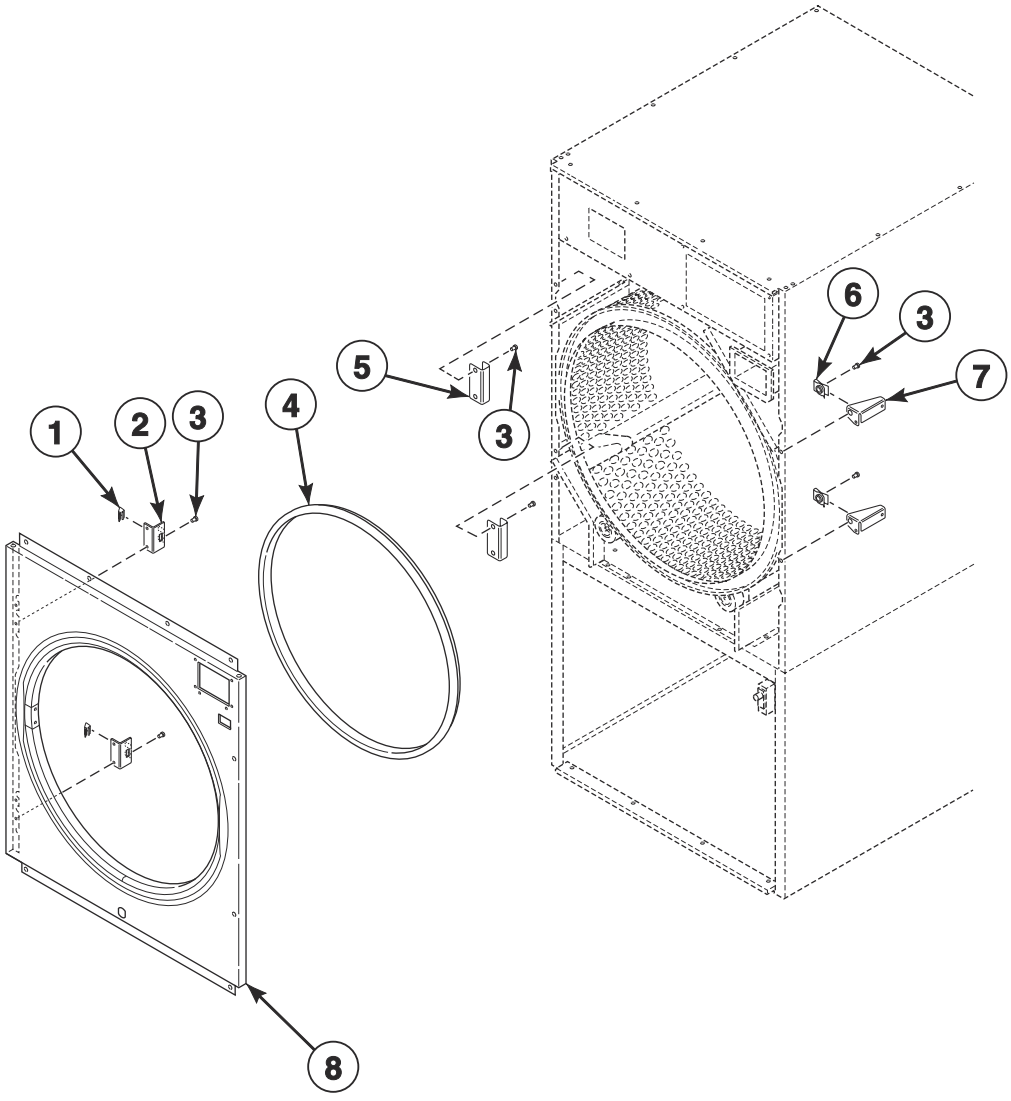

TMB3693P_70614301

© Copyright, Alliance Laundry Systems LLC – DO NOT COPY or TRANSMIT

Front Panel Assemblies - Design 4 H and S Models

REF	PART NO.	DESCRIPTION	COMMENTS
	70534301	Warning Label	English
	70534302	Warning Label	French
	70534300	Label Kit	Warning; IEC models
	70289101P	Gasket	Sold per foot; Use behind item 8
1	35865	Hold-Down Clip	2 required
2	70604801	Clip Mount Bracket	2 required
3	70058501	Pop Rivet	
4	70173401P	Front Panel Seal	
5	70604901	Clip Keeper Bracket	2 required
6	70030401	Nut	2 required
7	70610501	Bracket	2 required
8	70705101	Front Panel Assembly	Coin
	70705102	Front Panel Assembly	Card and central pay

© Copyright, Alliance Laundry Systems LLC – DO NOT COPY or TRANSMIT

Front Panel Assemblies - Design 5 Models

BG, BR, BU, HG, HT, JU, PG, PR, PU, SG and ST Models

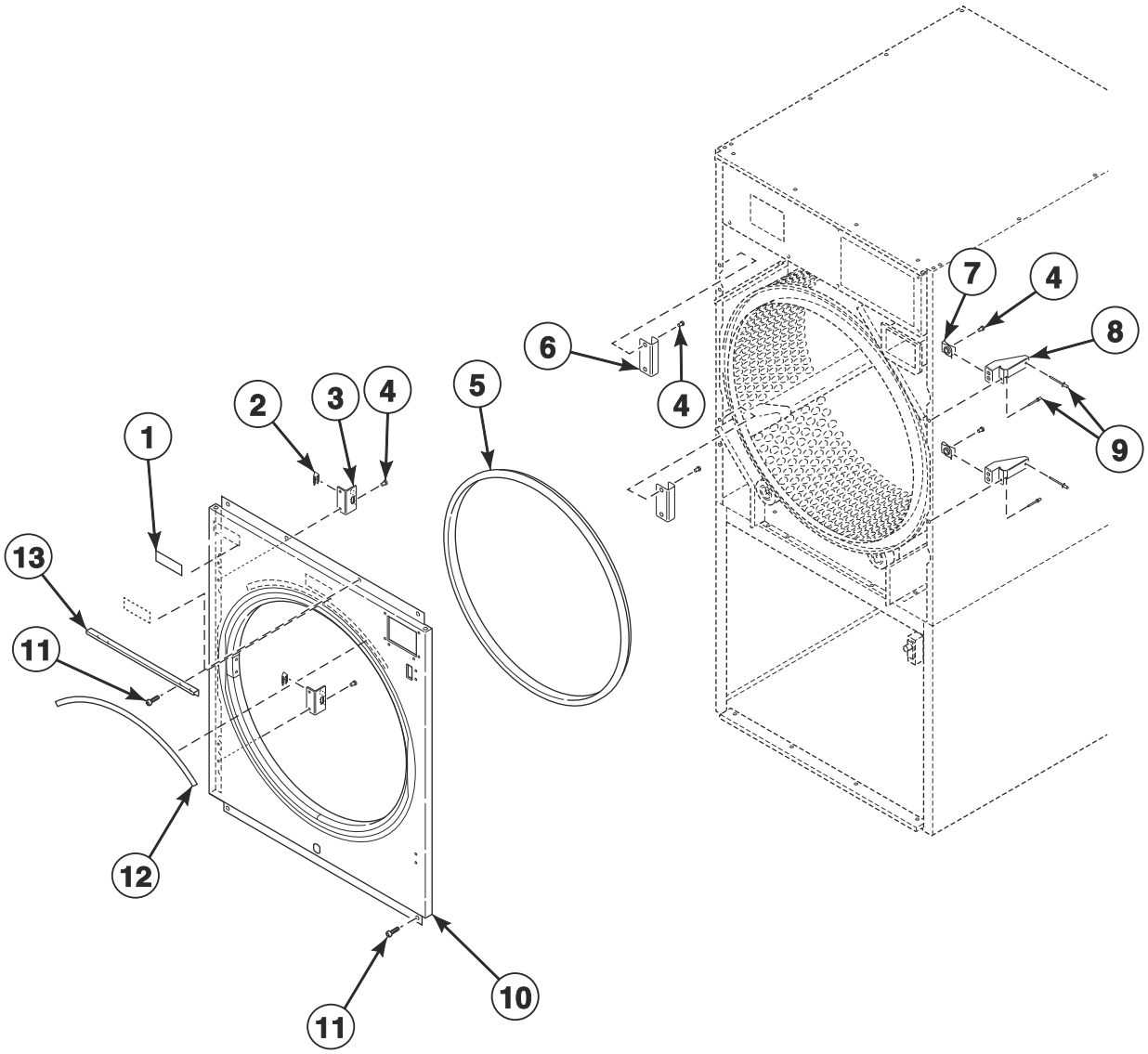

TMB3806P_70614301

© Copyright, Alliance Laundry Systems LLC – DO NOT COPY or TRANSMIT

Front Panel Assemblies - Design 5 Models

REF	PART NO.	DESCRIPTION	COMMENTS
	70289101P	Gasket	Sold per foot; Use behind item 10
1	70537001	Label	C.A.R.E.; B, H, P and S models
2	35865	Hold-Down Clip	2 required
3	70604801	Clip Mount Bracket	2 required
4	70058501	Pop Rivet	
5	70173401P	Front Panel Seal	
6	70604901	Clip Keeper Bracket	2 required
7	70030401	Nut	2 required
8	70634201	Bracket	
9	70614201	Rivet	
10	70705201	Front Panel Assembly	Stainless steel; Coin; B, H, P and S models
	70705202	Front Panel Assembly	Stainless steel; Card, central pay and OPL; Without e-stop; BG, BR, H, PG, PR and S models
	70705204	Front Panel Assembly	Stainless steel; OPL; With e-stop; BU, JU and PU models
	70705201W	Front Panel Assembly	Coin; H and S models
	70705202W	Front Panel Assembly	Card and central pay; H and S models
11	M411072	Screw	
12	70534301	Warning Label	English
	70534302	Warning Label	French
13	70641501	Control Panel Stand Bracket	

© Copyright, Alliance Laundry Systems LLC – DO NOT COPY or TRANSMIT

Cabinet Front Components

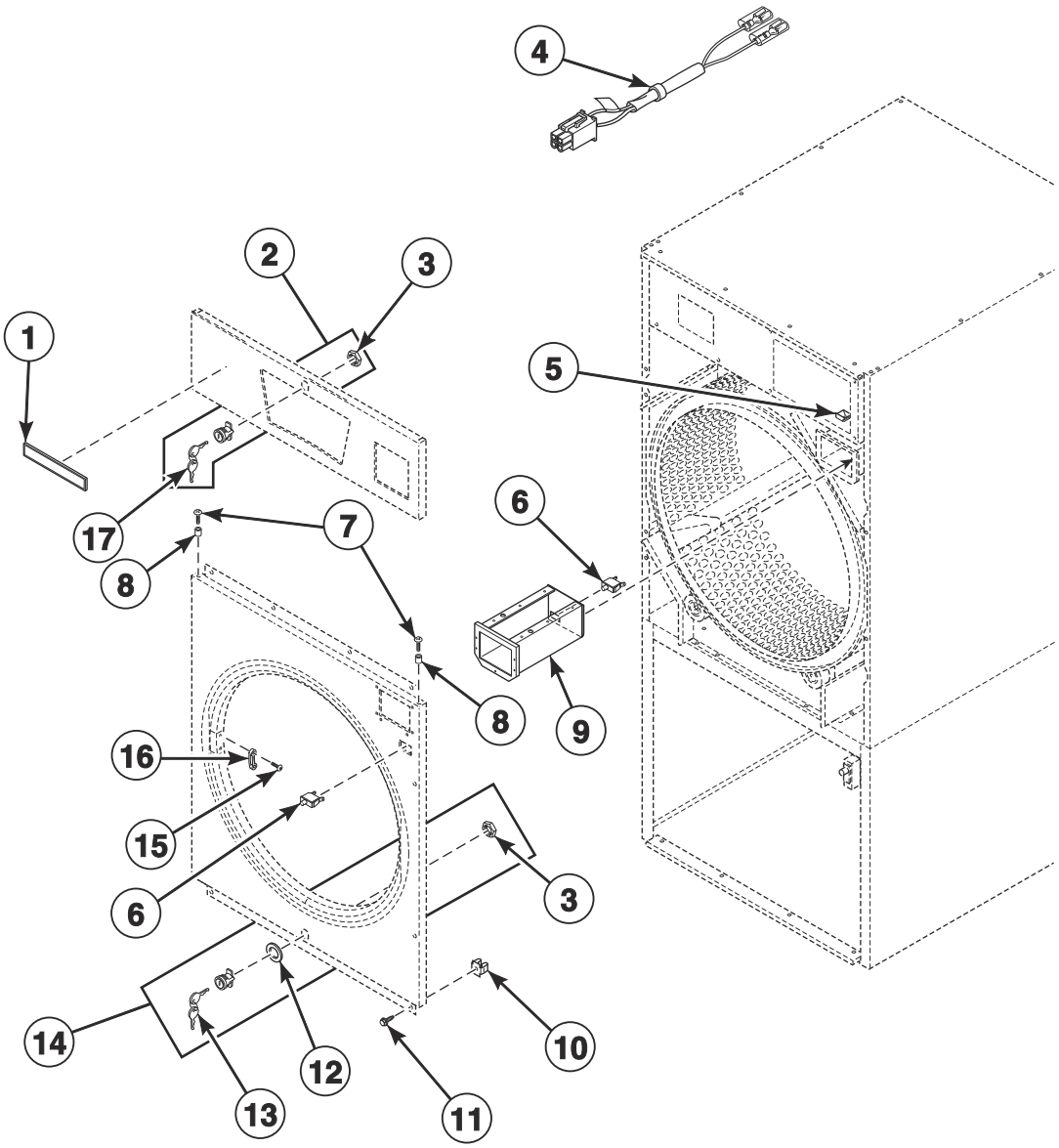

TMB3694P_70614301

© Copyright, Alliance Laundry Systems LLC – DO NOT COPY or TRANSMIT

Cabinet Front Components

REF	PART NO.	DESCRIPTION	COMMENTS
	44334103	Bypass Harness	Card and central pay
	70482901	Door Catch Kit	
1	F8664901	Nameplate	Design 4 S models
	F8688801	Nameplate	Design 5 S models
	F8687701	Decal	H models
	567293	Nameplate	B models
	567887	Nameplate	P models
	70685701	Nameplate	J models
	70685801	Nameplate	J models; SAFE
2	70733701	Lock, Key and Nut Kit	RL001; Chrome
	44089304	Panel Lock	RL001; Chrome
3	44088801	Nut	
4	44334101	Coin Vault Switch Harness	
5	70296401	Coin Chute Assembly	
6	70413301	Pushbutton Switch	
7	39733	Screw	
8	56079	Panel Locator	9 required
9	70529501	Coin Vault Assembly	
	F160673P	Coin Box	Optional equipment; Includes lock and key
10	70030501	Expansion Clip	8 required
11	M411072	Screw	8 required
12	70342401	Lock Shim	
13	70155602	Key	RL002
14	70722301	Lock, Key and Nut Kit	RL002; Chrome
	44089305	Panel Lock	RL002; Chrome
15	44166601	Pop Rivet	
16	M401223	Door Latch	
17	70155601	Key	RL001

© Copyright, Alliance Laundry Systems LLC – DO NOT COPY or TRANSMIT

Emergency Stop Button - OPL Models

B, J and P models

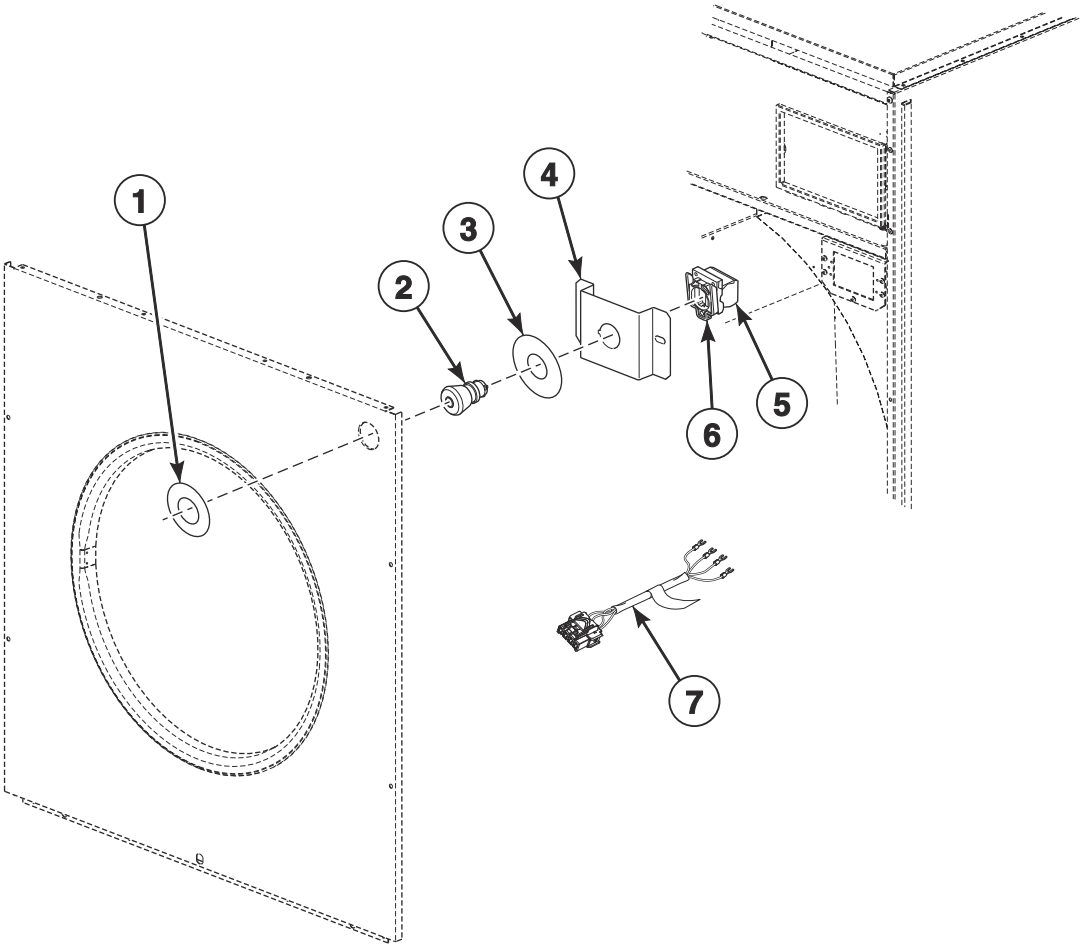

TMB3513P_70614301

© Copyright, Alliance Laundry Systems LLC – DO NOT COPY or TRANSMIT

Emergency Stop Button - OPL Models

REF	PART NO.	DESCRIPTION	COMMENTS
	70580301	Emergency Stop Button Kit	Includes items 2-4
	F8519403	Emergency Stop Bypass Harness	Coin, card and central pay
1	44012903	Emergency Stop Label	
2	F200233500	Emergency Stop Pushbutton	
3	44012901	Emergency Stop Label	
4	70550401	Emergency Stop Mounting Bracket	
5	F8069501	Contact Switch	2 required
6	F8538101	Contact Base	
7	44272401	Emergency Stop Harness	

© Copyright, Alliance Laundry Systems LLC – DO NOT COPY or TRANSMIT

Lower Cabinet Components

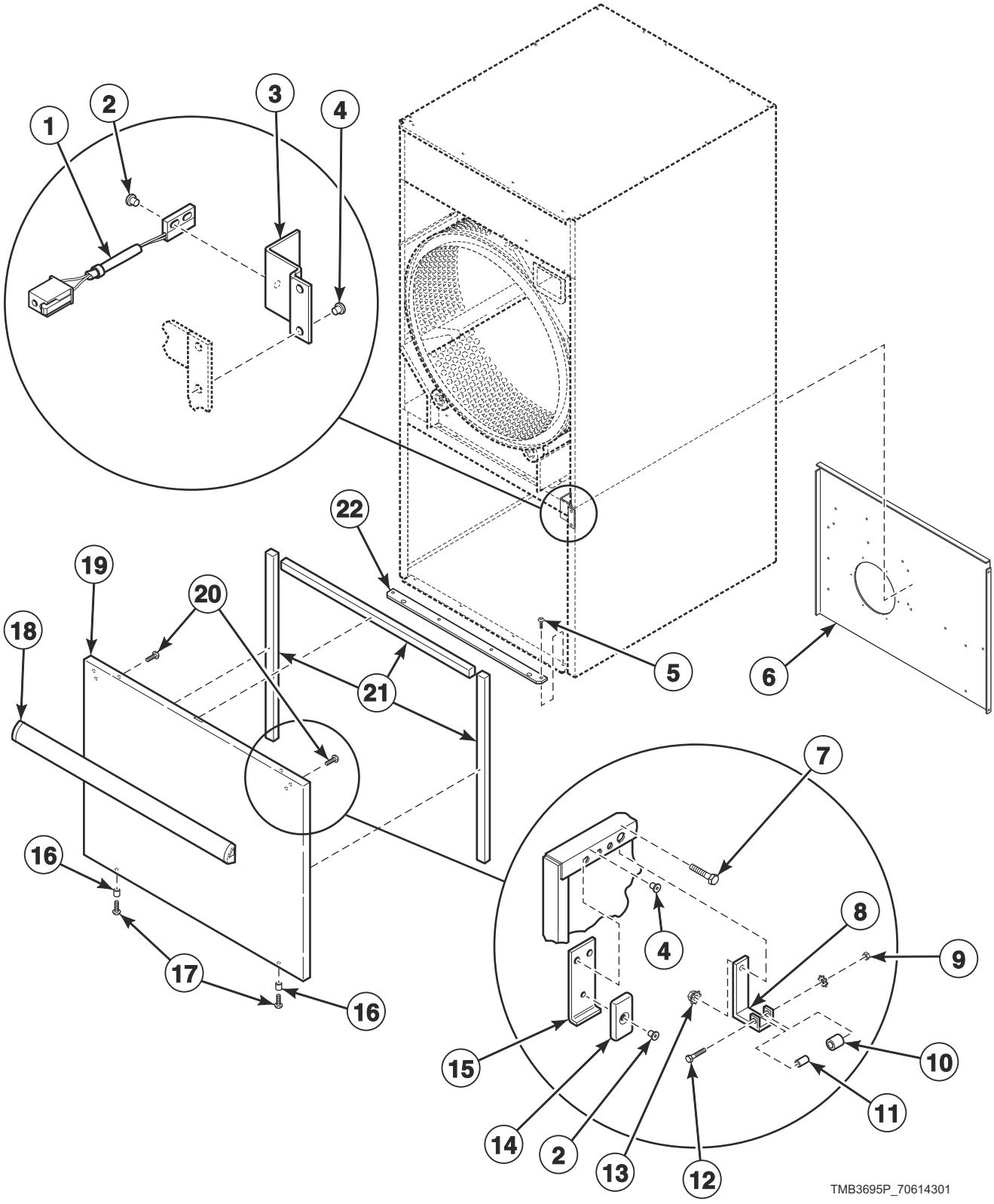

© Copyright, Alliance Laundry Systems LLC – DO NOT COPY or TRANSMIT

Lower Cabinet Components

REF	PART NO.	DESCRIPTION	COMMENTS
	70126301	Pop Rivet	J models; For attaching kickplate; Black; 6 required
	70117601	Kickplate	J models; Black
1	F8066804	Reed Switch Assembly	
2	70743501	Rivet	
3	70508501	Switch Bracket	
4	70058501	Pop Rivet	
5	430497	Screw	
6	70565301	Rear Lint Panel	
7	70132301	Screw	Attaching roller catch
8	70030301	Roller Catch Arm	
9	23951	Nut	
10	70297601	Roller Catch Wheel	
11	70030201	Roller Catch Spacer	
12	70072801	Screw	
13	51236	Nut	Attaching roller catch
14	70343101	Magnet	
15	44290501	Magnet Bracket	
16	56079	Panel Locator	
17	39733	Screw	
18	70154401	Handle and Caps Assembly	Black
19	70515405	Lint Panel	Stainless steel
	70515406W	Lint Panel	Design 5 H and S models
20	430757	Screw	For attaching handle; 6 required
21	70289101P	Gasket	Sold per foot
22	70017901	Lint Panel Pivot Plate	

© Copyright, Alliance Laundry Systems LLC – DO NOT COPY or TRANSMIT

Cylinder and Trunnion Assembly

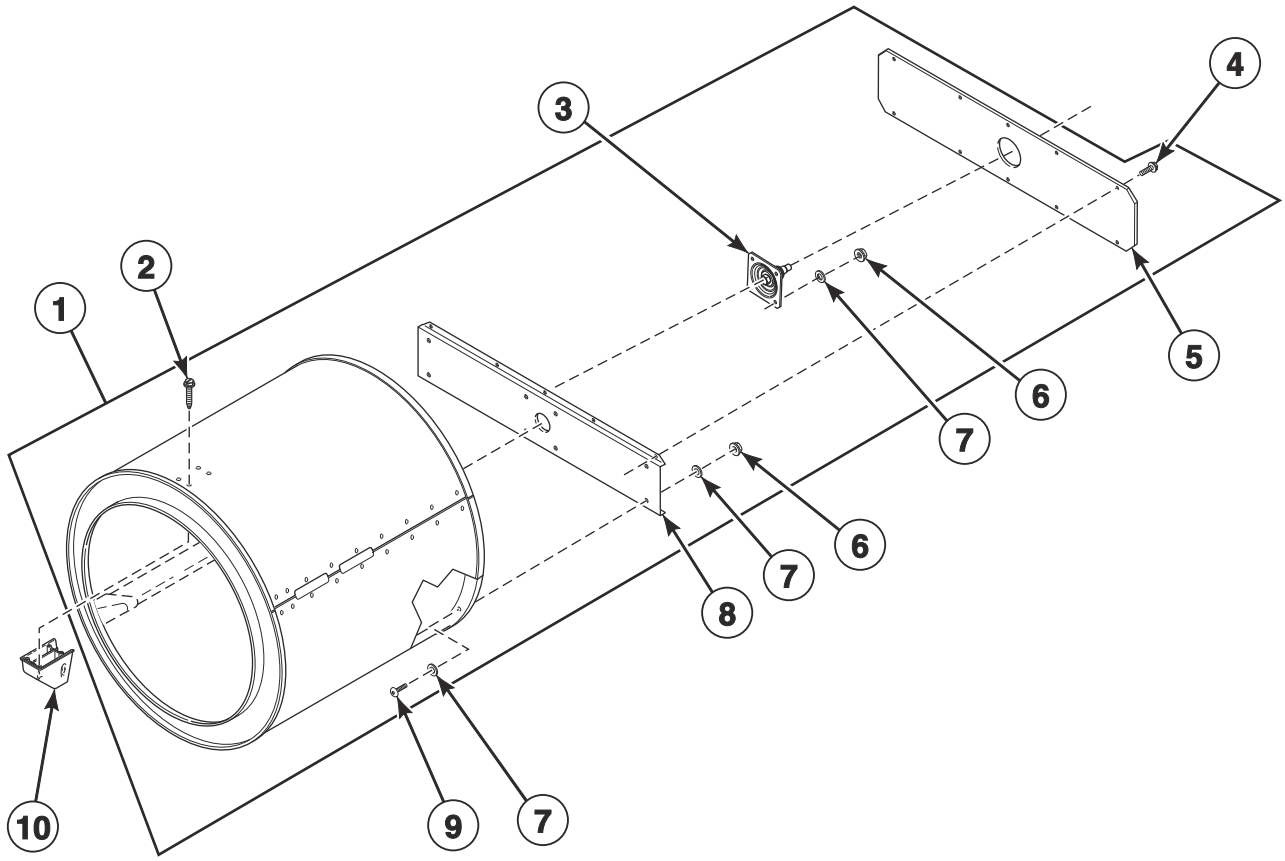

TMB3696P_70614301

© Copyright, Alliance Laundry Systems LLC – DO NOT COPY or TRANSMIT

Cylinder and Trunnion Assembly

REF	PART NO.	DESCRIPTION	COMMENTS
	70343101P	Drywall Screw Magnet Kit	
1	70372701P	Cylinder Assembly	Galvanized
	70372702P	Cylinder Assembly	Stainless steel
	70372703	Cylinder Assembly	H and S models; Galvanized with stainless steel back
2	62588	Screw	12 required
3	70564801	Trunnion and Seal Kit	Includes 70013702 Rear Cylinder Seal
4	430497	Screw	10 required
5	70257401	Rear Cylinder Channel Plate	
6	44087201	Nut	8 required
7	70411301	Washer	
8	70257301	Rear Cylinder Channel	
9	70391101	Screw	8 required
10	70070101	End Cap	

© Copyright, Alliance Laundry Systems LLC – DO NOT COPY or TRANSMIT

Cylinder Components

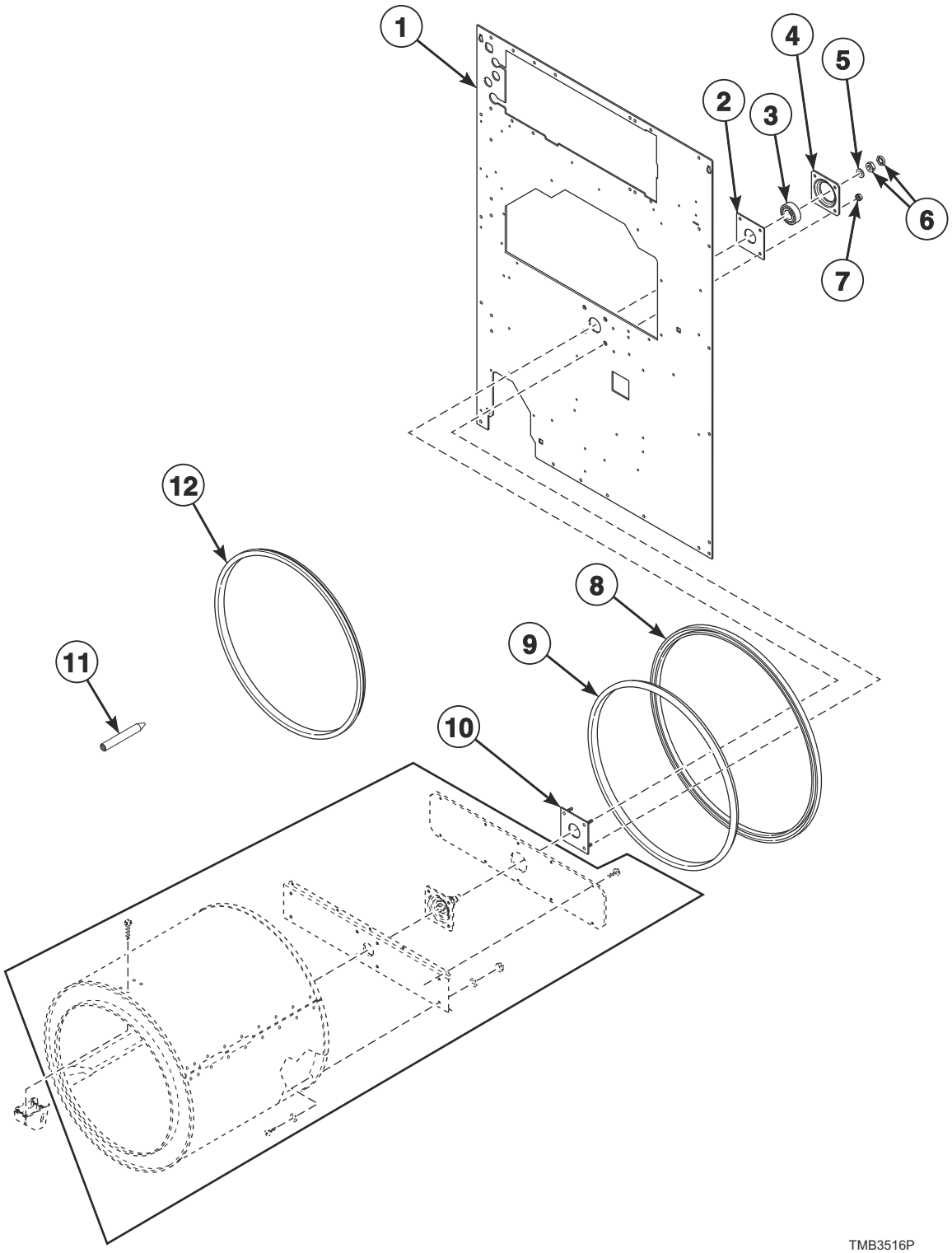

© Copyright, Alliance Laundry Systems LLC – DO NOT COPY or TRANSMIT

Cylinder Components

REF	PART NO.	DESCRIPTION	COMMENTS
	70343101P	Drywall Screw Magnet Kit	
	430260P	Support Housing Bearing Assembly	Includes items 3, 4 and Loctite
1	70564901	Rear Panel	Gas models
	70564902	Rear Panel	Electric and steam models
2	70355001	Rear Bearing Shim	
3	70448701	Support Bearing	
4	70013901	Rear Cylinder Bearing Housing	
5	M400991	Washer	
6	M400022	Nut	
7	M412986	Nut	4 required
8	70506401	Rear Cylinder Seal Support	
9	70013702	Rear Cylinder Seal	Use with D511637P Adhesive
10	430352	Cylinder Bearing Stud Plate Assembly	
11	263P4	Cylinder Guide Tool	
12	70066004	Center Cylinder Seal	

© Copyright, Alliance Laundry Systems LLC – DO NOT COPY or TRANSMIT

Cabinet Components

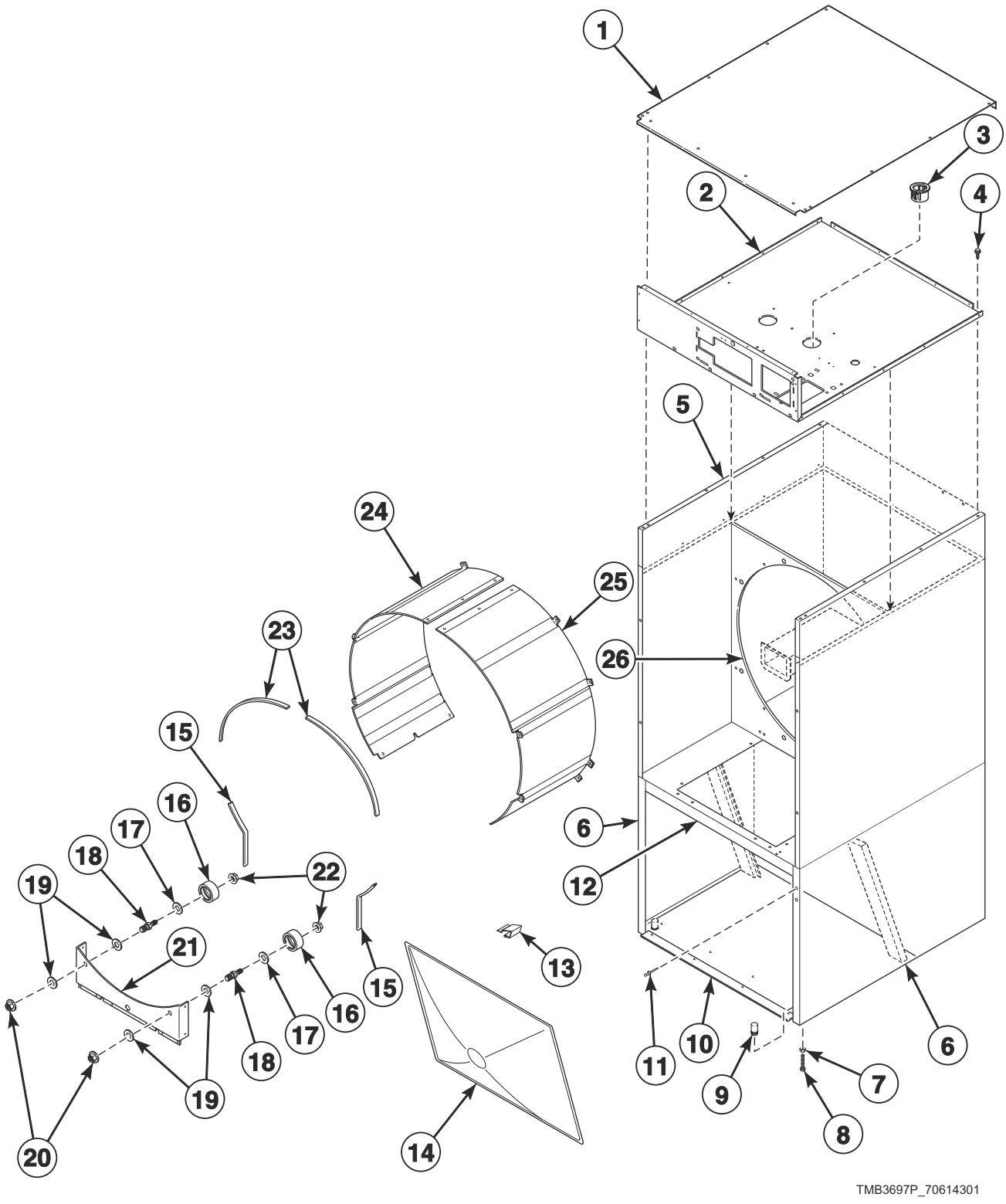

© Copyright, Alliance Laundry Systems LLC – DO NOT COPY or TRANSMIT

Cabinet Components

REF	PART NO.	DESCRIPTION	COMMENTS
	M4379P4	Tumbler Dolly Kit	
	298P4P	Spray Paint	White
	122P4P	Porcelain Touch-Up Paint	White
	205655	Leveling Leg Locknut Wrench	Use with item 7
1	70586401	Top Panel	
2	70641201	Top Pan	
3	70346501	Bushing	
4	430497	Screw	
5	70611101W	Side Panel	Upper; Design 4 S models
	70640902W	Side Panel	Upper; Design 5 H and S models
	70640901DG	Side Panel	Upper; Dark gray; P and B models
	70640902DG	Side Panel	Upper; Dark gray; J models
6	70253801WP	Side Panel	Lower; H and S models
	70253801DG	Side Panel	Lower; Dark gray; P and B models
	70253802DG	Side Panel	Lower; Dark gray; J models
7	21899	Nut	
8	70247701	Screw	
9	70063201	Hole Plug	
10	70332401P	Lower Pan	
11	70058501	Pop Rivet	16 required; Upper side panel
12	70565201	Center Pan	
13	35865	Hold-Down Clip	
14	70325601	Lint Screen	
15	70015709	Sheet Metal Edge Gasket	Lower
16	70616701	Roller and Seal Kit	
17	70443601	Roller Seal	
18	70249501	Roller Shaft	
19	70261401	Washer	
20	M404993	Nut	
21	70328301	Roller Support Bracket	
22	430576	Nut	
23	70015710	Sheet Metal Edge Gasket	Upper
24	70347202	Cylinder Shroud	Left
25	70347201	Cylinder Shroud	Right
26	70252601	Center Partition	

© Copyright, Alliance Laundry Systems LLC – DO NOT COPY or TRANSMIT

Fire Suppression System Components

B, J and P Gas and Steam OPL Models

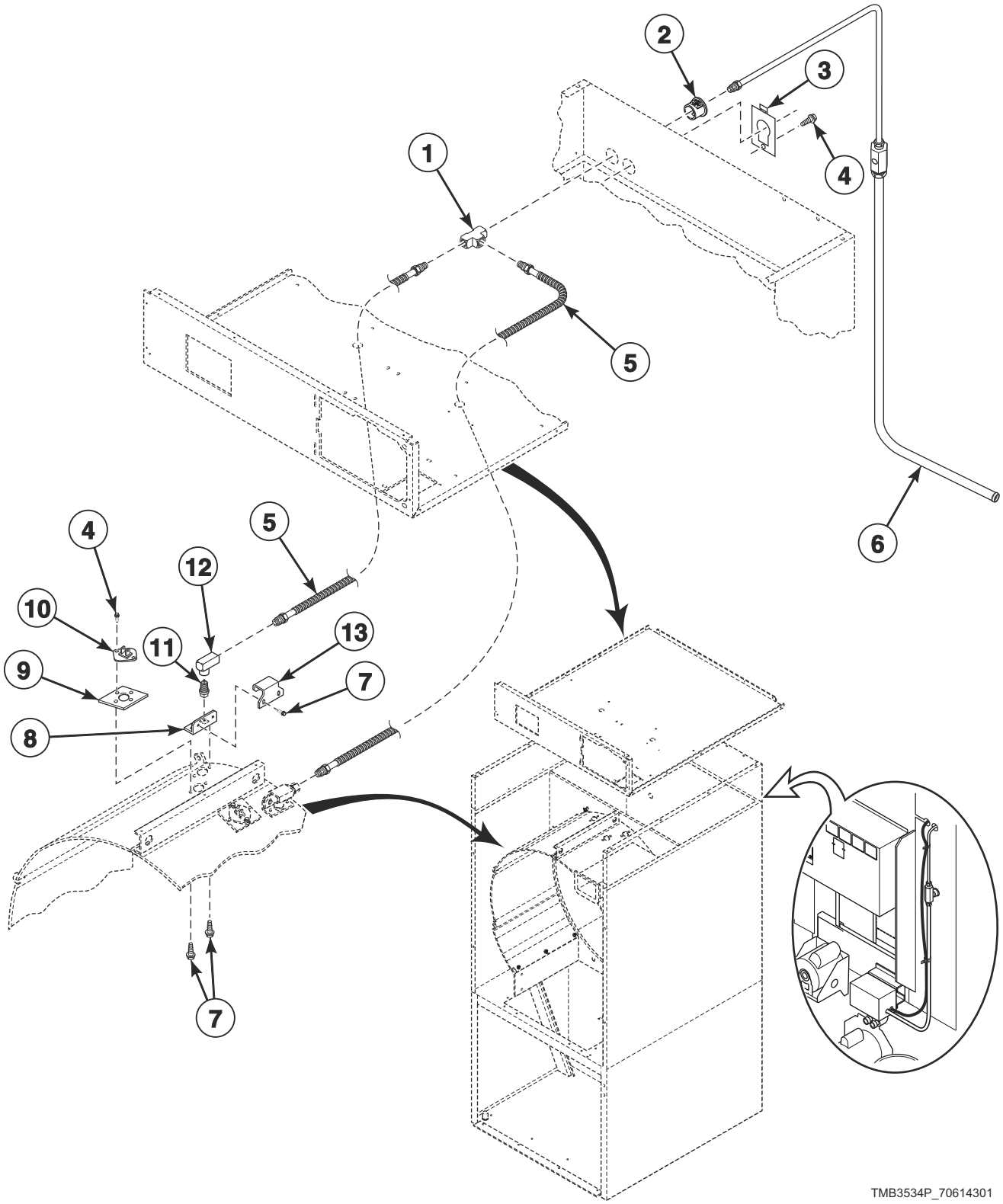

© Copyright, Alliance Laundry Systems LLC – DO NOT COPY or TRANSMIT

Fire Suppression System Components

REF	PART NO.	DESCRIPTION	COMMENTS
1	70427901	Union Tee	
2	70178701	Snap Bushing	
3	70523301	Harness Adapter Plate	
4	51780	Screw	4 required
5	70427701	Spray Nozzle Hose	2 required
6	70427601	Tube Assembly	
7	430497	Screw	12 required
8	70424201	Nozzle Bracket	2 required
9	70424401	Thermistor Plate	2 required
10	44064701	Thermistor	2 required
11	70427801	Spray Nozzle	2 required
12	70428101	Elbow	2 required
13	70428601	Nozzle Bracket	2 required

© Copyright, Alliance Laundry Systems LLC – DO NOT COPY or TRANSMIT

Fire Suppression System Control Box

B, J and P Gas and Steam OPL Models

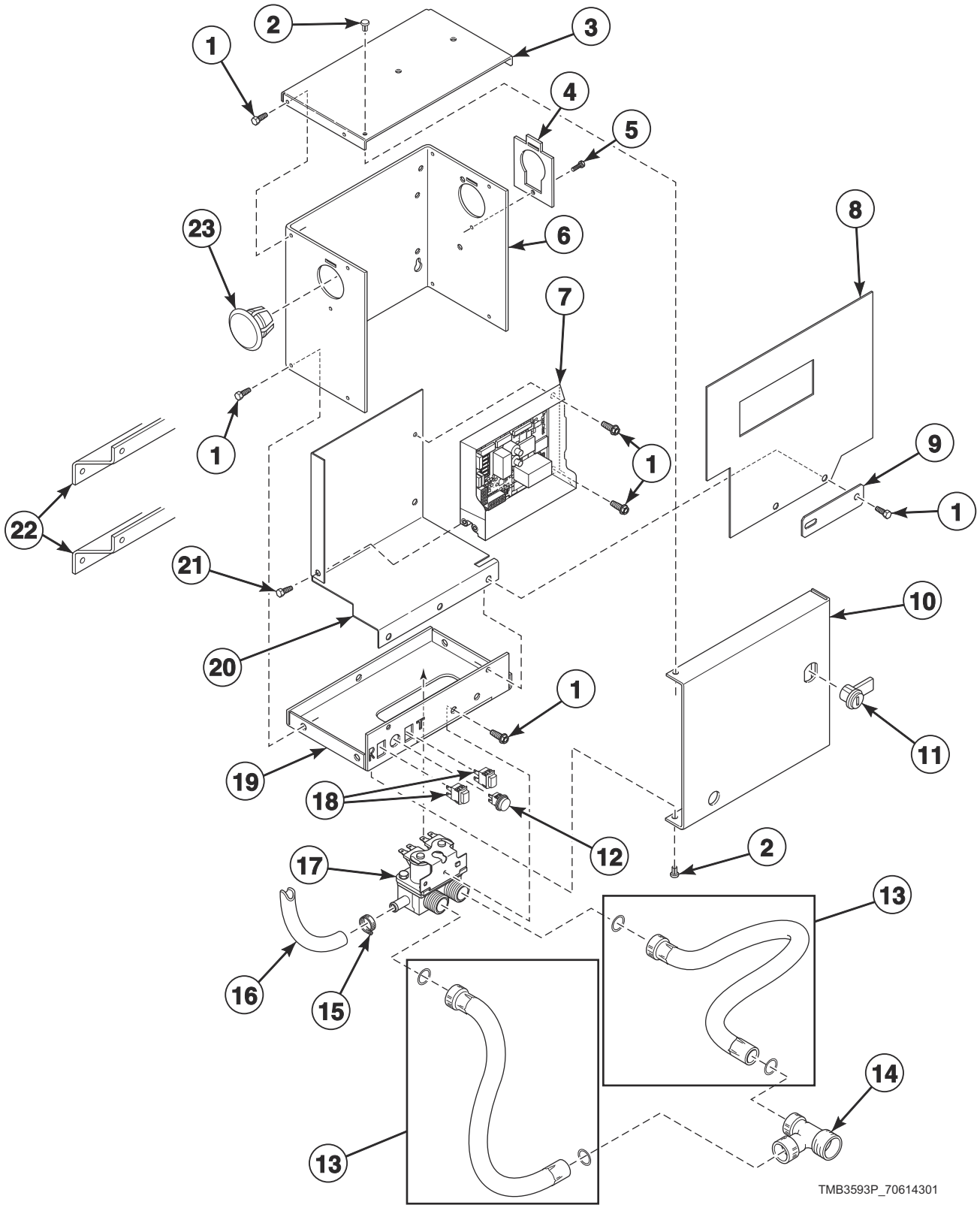

© Copyright, Alliance Laundry Systems LLC – DO NOT COPY or TRANSMIT

Fire Suppression System Control Box

REF	PART NO.	DESCRIPTION	COMMENTS
	44340301	Cold Weather Kit	
	70155601	Key	RL001; Use with item 11
	44334404	Control Harness	
	44334405	Water Valve Harness	
	44334402	Power Sensor Harness	
	44334401	Interconnect Harness	
	44334406	Sensor Harness	
	44324501	Warning Label	F.S.S.; North America models
	44324500	Label Kit	F.S.S.; IEC models
	F8614401	Shock Warning Label	North America models
	F8614201	Shock Warning Label	IEC models
	44318200	Label Kit	IEC models
	44324502	Warning Label	
	44318201	Label	North America models
1	430497	Screw	
2	M400713	Drive Rivet	
3	44307101	Control Box Top	
4	70523301	Harness Adapter Plate	
5	51780	Screw	
6	44306701	Control Box Housing	
7	70511601	Control	
8	44326801	Shield	
9	70551701	Filter Mounting Plate	
10	44065201	Control Box Cover	
11	70733701	Lock, Key and Nut Kit	RL001 key code; Optional if same key is to be used for control lock
12	801432	Light	
13	202799	Fill Hose	2 required; GHT
	202800	Fill Hose	2 required; BSPP
14	44069101	Hose Fitting	North America models
15	36801	Hose Clamp	
16	44073304	Hose	14 inches; Outlet hose
17	70519801	Mixing Valve	
18	801434W	Push-to-Start Switch	2 required
19	44065301	Control Box Base	
20	44306601	Mixing Valve Shield Bracket	
21	804608	Screw	
22	70601401	Mounting Bracket	
23	70180001	Plug	

© Copyright, Alliance Laundry Systems LLC – DO NOT COPY or TRANSMIT

Motor Components

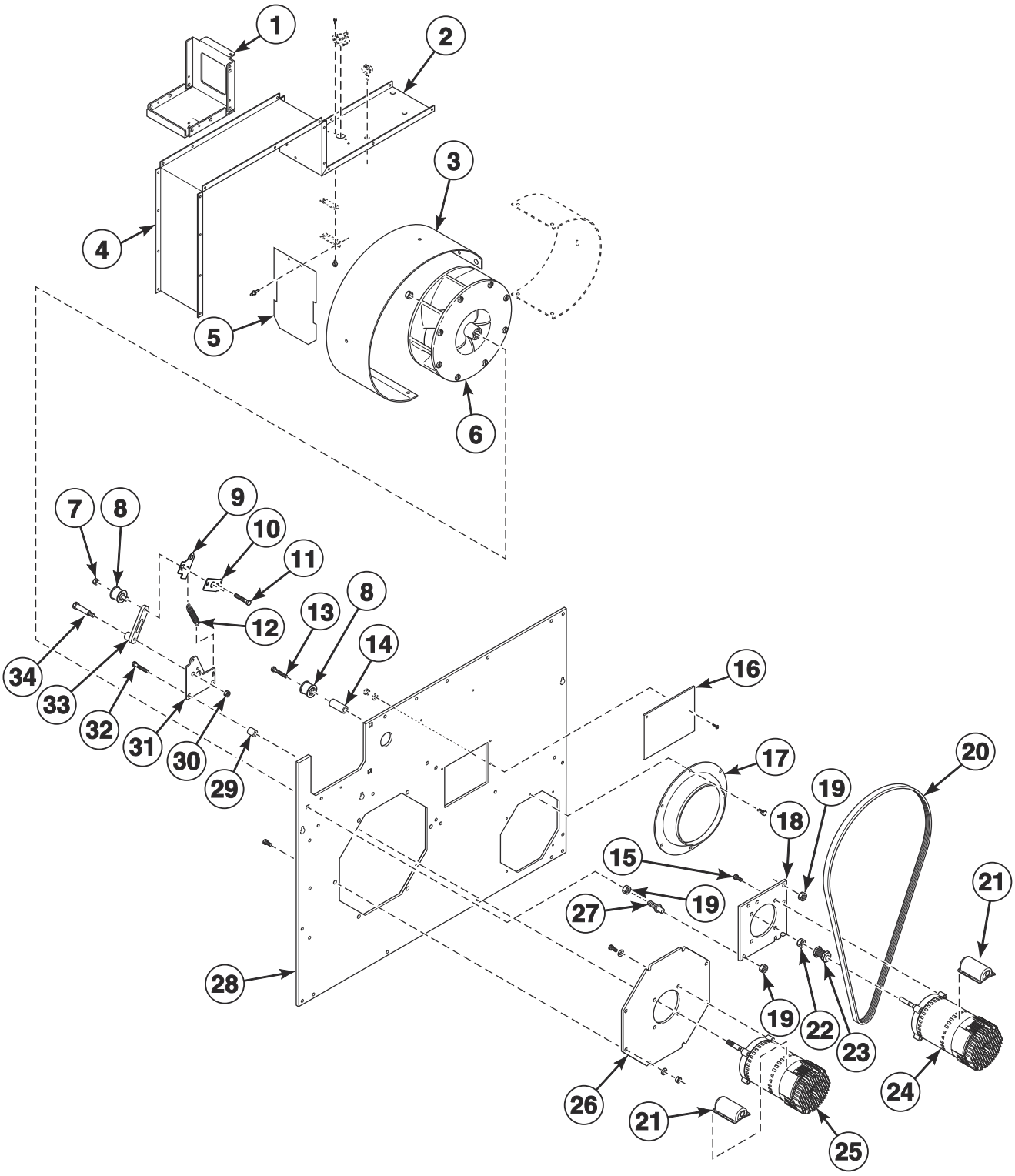

© Copyright, Alliance Laundry Systems LLC – DO NOT COPY or TRANSMIT

Motor Components

REF	PART NO.	DESCRIPTION	COMMENTS
1	70564101	Motor Mount Bracket	
2	70554701	Blower Housing	Top
3	70016301	Blower Housing Scroll	
4	70215101	Blower Housing	
5	70209501	Damper and Hinge Exhaust Assembly	
6	70359801P	Blower Assembly	
7	56156	Nut	
8	70050401P	Idler Wheel Assembly	
9	70569501	Tensioning Bracket	
10	70543401	Spring Catch Bracket	
11	70508301	Screw	
12	70571801	Spring	
13	F430144	Screw	
14	70569603	Standoff	
15	70126104	Screw	
16	70202501	Drive Access Cover	6 inch
17	70017801	Exhaust Thimble	6 inch
18	70564201	Motor Mount Plate	
19	44087201	Nut	
20	70655101	Lever Arm and Belt Kit	
21	70521901	Motor Conduit Mounting Bracket	
22	44333202	Nut	
23	70559101	Motor Pulley	
24	70478601P	Drive Motor	.33 HP; 120, 230 Volt/1 Phase
	70485001P	Drive Motor	.33 HP; 380-460 Volt/3 Phase
25	70478701P	Fan Motor	.50 HP; 120, 230 Volt/1 Phase
	70484901P	Fan Motor	.50 HP; 380-460 Volt/3 Phase
26	70349601	Blower Motor Mounting Plate	
27	70334701	Double Ended Stud	
28	70493301	Lower Rear Assembly	
29	70488403	Spacer	
30	44087301	Nut	
31	70571901	Drive Plate	
32	70546301	Screw	
33	70653801	Lever Arm and Bushing Assembly	
34	70501301	Screw	

© Copyright, Alliance Laundry Systems LLC – DO NOT COPY or TRANSMIT

Blower and Exhaust Components

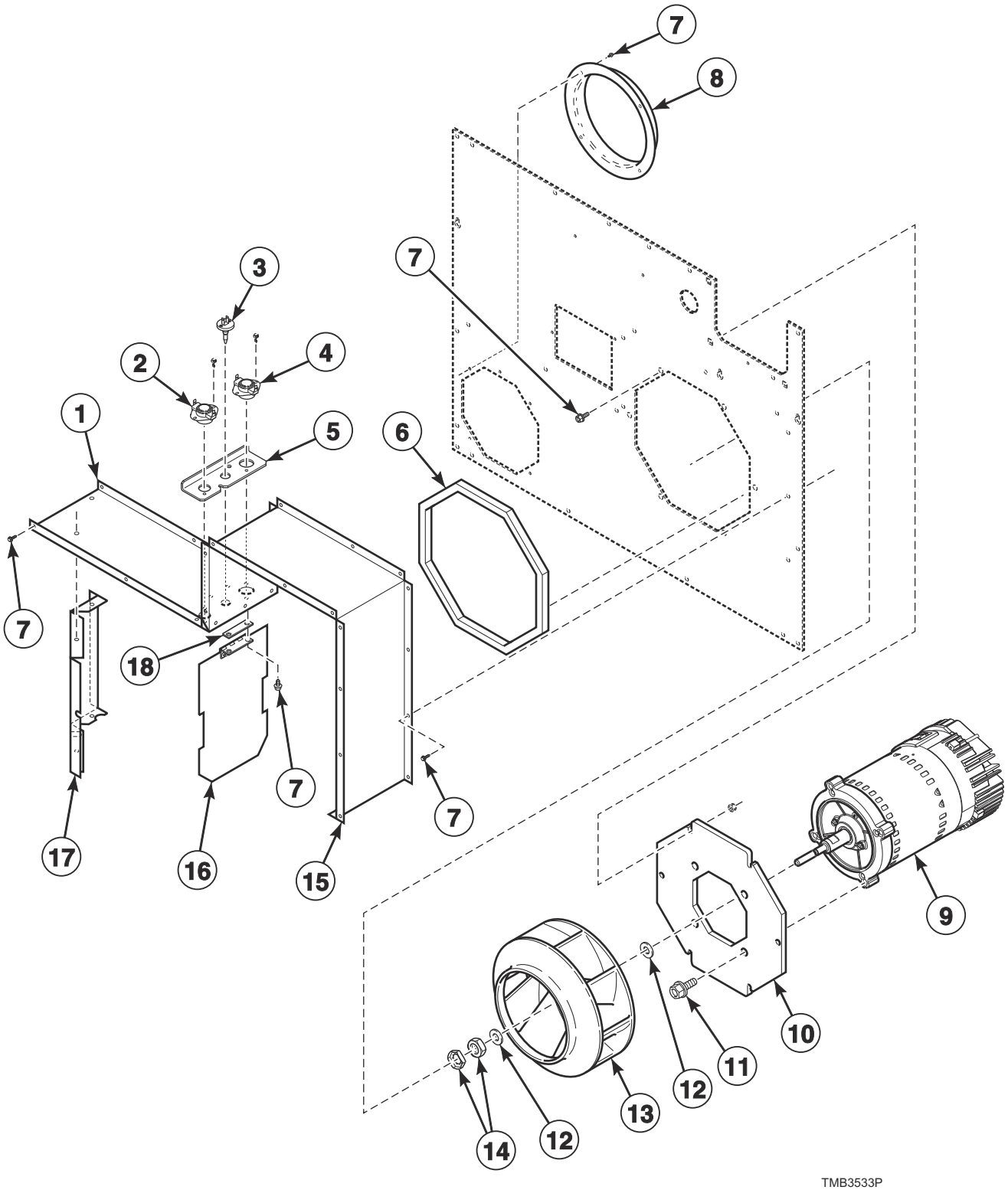

© Copyright, Alliance Laundry Systems LLC – DO NOT COPY or TRANSMIT

Blower and Exhaust Components

REF	PART NO.	DESCRIPTION	COMMENTS
1	70554701	Blower Housing	Top
2	70530901	Limit Thermostat	Manual reset
3	M414704	Thermistor	
4	44328001	Limit Thermostat	Auto reset
5	70554901	Limit Access Bracket	
6	70392701P	Gasket	For blower housing opening
7	430497	Screw	
8	70014101	Blower Inlet Cone	
9	70478701P	Fan Motor	.50 HP; 120, 230 Volt/1 Phase
	70484901P	Fan Motor	.50 HP; 380-460 Volt/3 Phase
10	70349601	Blower Motor Mounting Plate	
11	70126101	Screw	
12	M400991	Washer	
13	70359801P	Blower Assembly	
14	M400022	Nut	
15	70215101	Blower Housing	
16	70209501	Damper and Hinge Exhaust Assembly	
17	70020301	Blower Housing	Left
18	70220901	Damper Spacer	

© Copyright, Alliance Laundry Systems LLC – DO NOT COPY or TRANSMIT

Airflow Switch

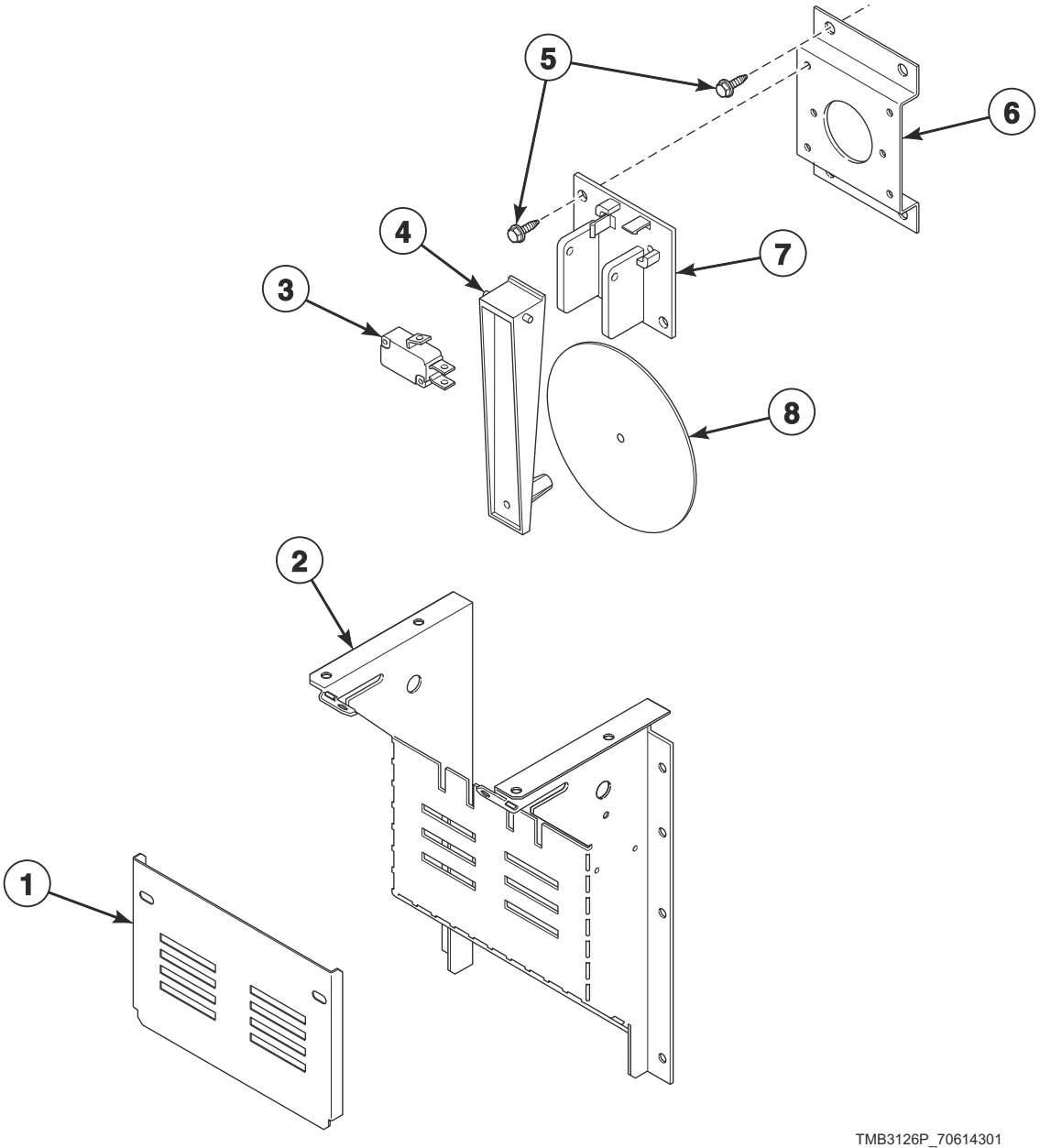

© Copyright, Alliance Laundry Systems LLC – DO NOT COPY or TRANSMIT

Airflow Switch

REF	PART NO.	DESCRIPTION	COMMENTS
1	70356601	Airflow Switch Cover	
2	70356101	Airflow Switch Wrapper	
3	70411901	Switch	
4	70319401	Airflow Switch Arm	
5	430497	Screw	
6	70356301	Switch Bracket	
7	70319602	Airflow Switch and Arm Bracket	
8	70319201	Airflow Switch Vane	

© Copyright, Alliance Laundry Systems LLC – DO NOT COPY or TRANSMIT

Gas Heater Components

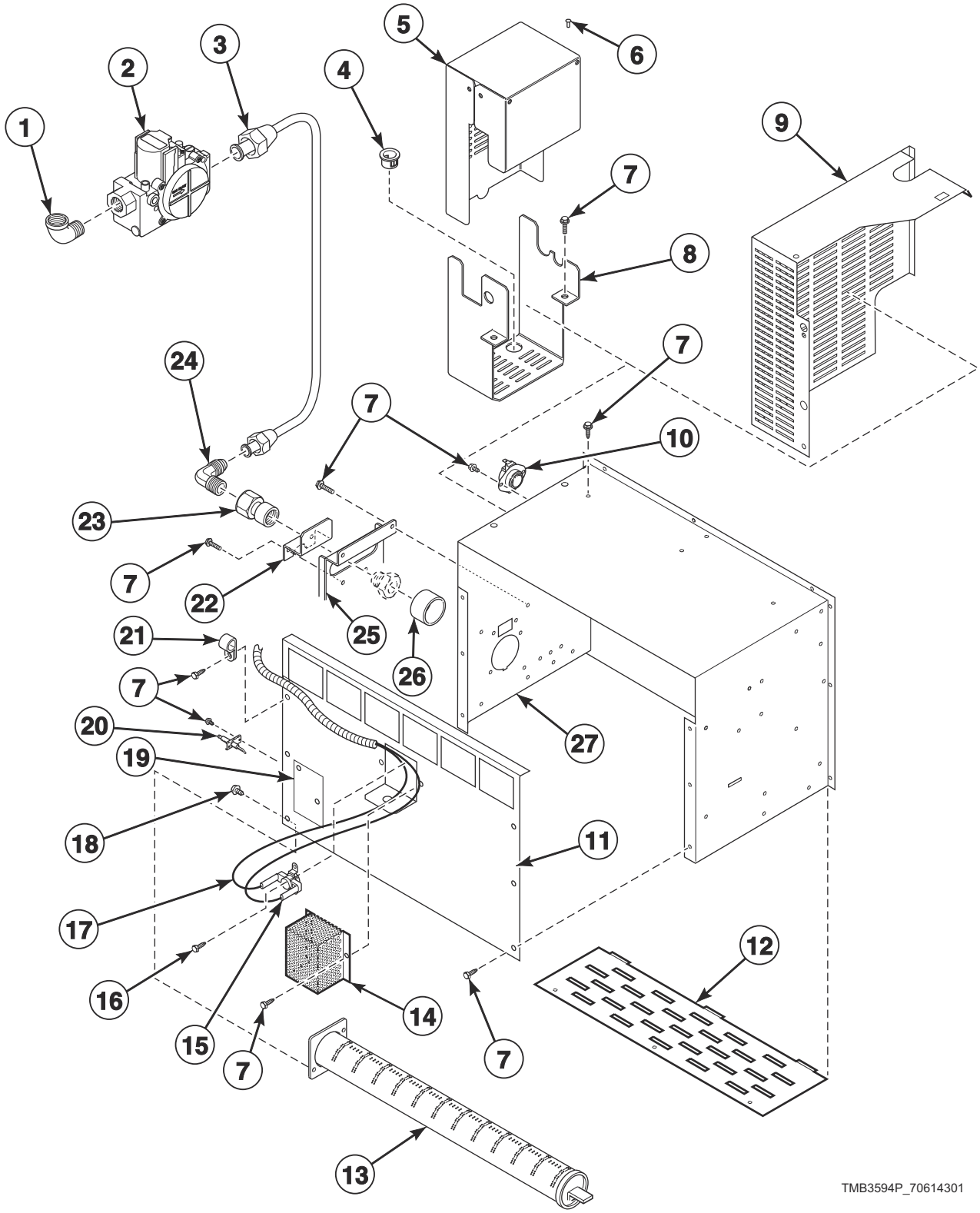

© Copyright, Alliance Laundry Systems LLC – DO NOT COPY or TRANSMIT

Gas Heater Components

REF	PART NO.	DESCRIPTION	COMMENTS
	44273501	Gas Valve Harness	
	44239702	High Voltage Suppression Cable	
	70346801	Pipe Plug	
	70550202	L.P. Conversion Kit	North America and Australian models; N.G.; 0-2,000 feet
	70551902	L.P. Conversion Kit	IEC models; N.G.; 0-2,000 feet
	70131901	Adapter	IEC models; BPT/NPT
	70131902	Adapter	North America models; BPT/NPT
	70167601	Plug	IEC models
	70535901	Notice Label	Australian models; Natural Gas (N.G.)
	70544901	Notice Label	Australian models; Liquid Petroleum Gas (L.P.)
1	H86070034	Street Elbow	T market models
	F422304	Street Elbow	All other models
2	44154503	N.G. Valve	North America models
	44154504	L.P. Valve	North America models
	44154507	Gas Valve	IEC models; N.G.; 1/2 NPT
	44154508	Gas Valve	IEC models; L.P.; 1/2 NPT
3	70271201	Gas Line Assembly	
4	M400770	Snap Bushing	
5	70429901	Gas Valve Cover	
6	M405750	Pop Rivet	4 required
7	430497	Screw	10 required
8	70504101	Gas Valve Bracket	
9	70429901	Gas Valve Cover	IEC models
10	44328004	Limit Thermostat	Side
11	70371501	Stove Back	
12	70188801	Burner Grill	
13	70229801P	Gas Burner	
	70546701	Anti-Rattle Burner Assembly	Includes 70229801P Gas Burner, 431318 Control Door Latch and M400003 Pop Rivet
14	M414477	Thermostat Cover	
15	44328104	Limit Thermostat	Rear
16	M405188	Screw	2 required
17	70564301	Stove Limit Harness	
18	05161	Screw	
19	70159601	Igniter Cover	
20	70548701P	Spark Electrode	
21	70203701	Pipe Clip	
22	70539901	Ignition Keeper Orifice Bracket	
23	70379301	Orifice Adapter	
24	70208701	Elbow	2 required
25	70248901	Orifice Holder Bracket	
26	70239801	Primary Air Adjustment Sleeve	L.P. models
27	70333401	Stove Top and Sides	

© Copyright, Alliance Laundry Systems LLC – DO NOT COPY or TRANSMIT

Burner Orifices

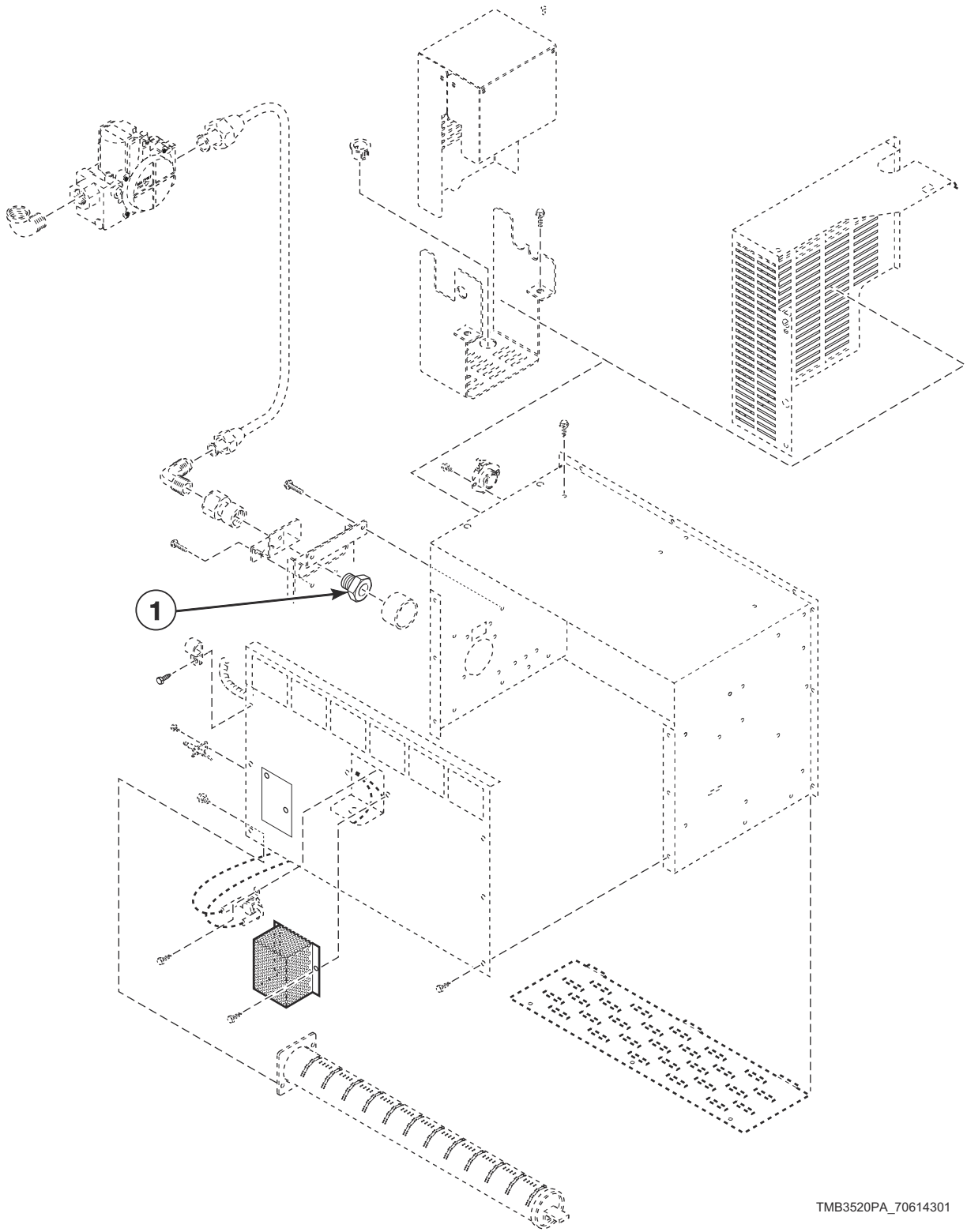

© Copyright, Alliance Laundry Systems LLC – DO NOT COPY or TRANSMIT

Burner Orifices

REF	PART NO.	DESCRIPTION	COMMENTS
	70609903	High Altitude Orifice Kit	North America Natural Gas (N.G.) models
	70609904	High Altitude Orifice Kit	North America Liquid Petroleum Gas (L.P.) models
1	70684142	Burner Orifice	Standard models; N.G.; Drill no. 20 (4.09 mm); 0-2,000 feet
	70684139	Burner Orifice	Standard models; N.G.; Drill no. 23 (3.91 mm); 2,001-4,000 feet
	70684137	Burner Orifice	Standard models; N.G.; Drill no. 25 (3.80 mm); 4,001-6,000 feet
	70684135	Burner Orifice	Standard models; N.G.; Drill no. 27 (3.66 mm); 6,001-8,000 feet
	70684133	Burner Orifice	Standard models; N.G.; 3.50 mm; 8,001-10,000 feet
	70684116	Burner Orifice	Standard models with 2nd digit A, G, H, J, K, L and T; L.P.; Drill no. 40 (2.49 mm); 0-2,000 feet
	70684114	Burner Orifice	Standard models with 2nd digit A, G, H, J, K, L and T; L.P.; Drill no. 42 (2.37 mm); 2,001-4,000 feet
	70684113	Burner Orifice	Standard models with 2nd digit A, G, H, J, K, L and T; L.P.; 2.30 mm; 4,001-6,000 feet
	70684111	Burner Orifice	Standard models with 2nd digit A, G, H, J, K, L and T; L.P.; 2.20 mm; 6,001-8,000 feet
	70684109	Burner Orifice	Standard models with 2nd digit A, G, H, J, K, L and T; L.P.; Drill no. 45 (2.08 mm); 8,001-10,000 feet
	70684110	Burner Orifice	CE standard models; L.P.; Drill no. 44 (2.18 mm); 0-2,000 feet
	70684109	Burner Orifice	CE standard models; L.P.; Drill no. 45 (2.08 mm); 2,001-4,000 feet
	70684107	Burner Orifice	CE standard models; L.P.; Drill no. 47 (1.99 mm); 4,001-6,000 feet
	70684106	Burner Orifice	CE standard models; L.P.; Drill no. 48 (1.93 mm); 6,001-8,000 feet
	70684105	Burner Orifice	CE standard models; L.P.; Drill no. 49 (1.85 mm); 8,001-10,000 feet
	70684111	Burner Orifice	Standard J market models; L.P.; 2.20 mm; 0-2,000 feet
	70684109	Burner Orifice	Standard J market models; L.P.; Drill no. 45 (2.08 mm); 2,001-4,000 feet
	70684108	Burner Orifice	Standard J market models; L.P.; Drill no. 46 (2.06 mm); 4,001-6,000 feet
	70684106	Burner Orifice	Standard J market models; L.P.; Drill no. 48 (1.93 mm); 6,001-8,000 feet
	70684105	Burner Orifice	Standard J market models; L.P.; Drill no. 49 (1.85 mm); 8,001-10,000 feet
	70684134	Burner Orifice	Eco models; N.G.; Drill no. 28 (3.57 mm); 0-2,000 feet
	70684131	Burner Orifice	Eco models; N.G.; 3.40 mm; 2,001-4,000 feet
	70684130	Burner Orifice	Eco models; N.G.; 3.30 mm; 4,001-6,000 feet
	70684128	Burner Orifice	Eco models; N.G.; Drill no. 1/8 (3.18 mm); 6,001-8,000 feet
	70684126	Burner Orifice	Eco models; N.G.; Drill no. 31 (3.05 mm); 8,001-10,000 feet

© Copyright, Alliance Laundry Systems LLC – DO NOT COPY or TRANSMIT

Electric Heater Components

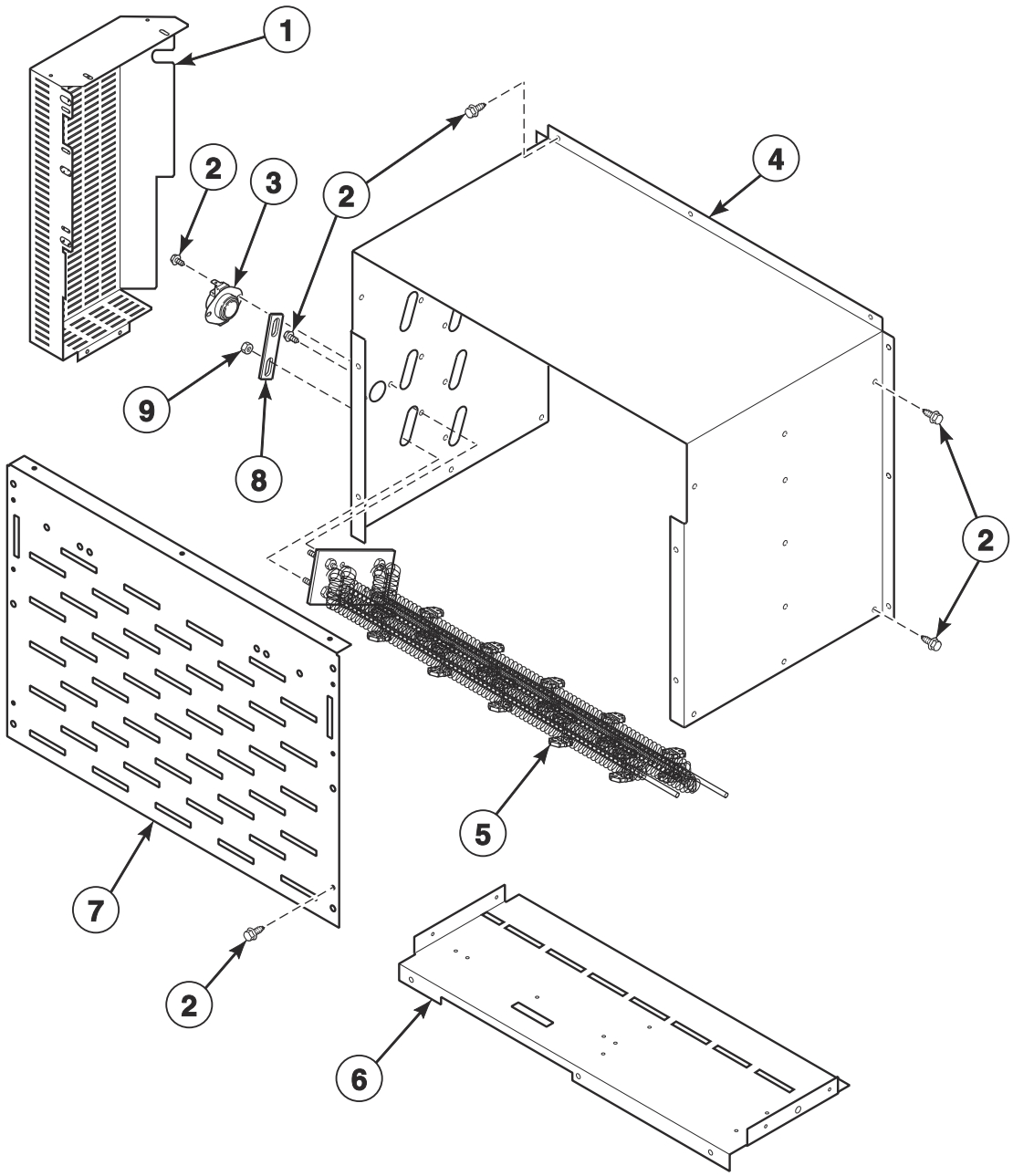

TMB3521P_70614301

© Copyright, Alliance Laundry Systems LLC – DO NOT COPY or TRANSMIT

Electric Heater Components

REF	PART NO.	DESCRIPTION	COMMENTS
	70564303	Stove Limit Harness	
	44281709	Jumper Harness	Use with 440-480 Volt
	44295412	Jumper Harness	Use with 380-415 Volt; 4 required
1	70365201	Stove Connectors Cover	
2	430497	Screw	
3	44328006	Limit Thermostat	
4	70525601	Stove Top and Sides	
5	70034401P	Heater Element	Standard models; 3 required; 7 kW; 208 Volt heater element for 200-208 Volt/1 or 3 Phase
	70034402P	Heater Element	Standard models; 3 required; 7 kW; 220 Volt heater element for 380 and 440 Volt/3 Phase
	70034403P	Heater Element	Standard models; 3 required; 7 kW; 240 Volt heater element for 230-240 Volt/1 or 3 Phase and 400-415 and 460-480 Volt/3 Phase
	70034415P	Heater Element	Eco models; 3 required; 4 kW; 208 Volt heater element for 200-208 Volt/3 Phase
	70034414P	Heater Element	Eco models; 3 required; 4 kW; 220 Volt heater element for 380 and 440 Volt/3 Phase
	70034416P	Heater Element	Eco models; 3 required; 4 kW; 240 Volt heater element for 400-415 Volt/50 Hertz or 240 and 460-480 Volt/60 Hertz
6	70357201	Stove Partition	
7	70214901	Stove Grill	
8	70066501	Jumper Bar	2 required for 440-480 Volt
	M400869	Jumper Strip	3 required for 380-415 and 440-480 Volt; 6 required for 200-240 Volt
9	70054	Nut	

© Copyright, Alliance Laundry Systems LLC – DO NOT COPY or TRANSMIT

Steam Heater Components

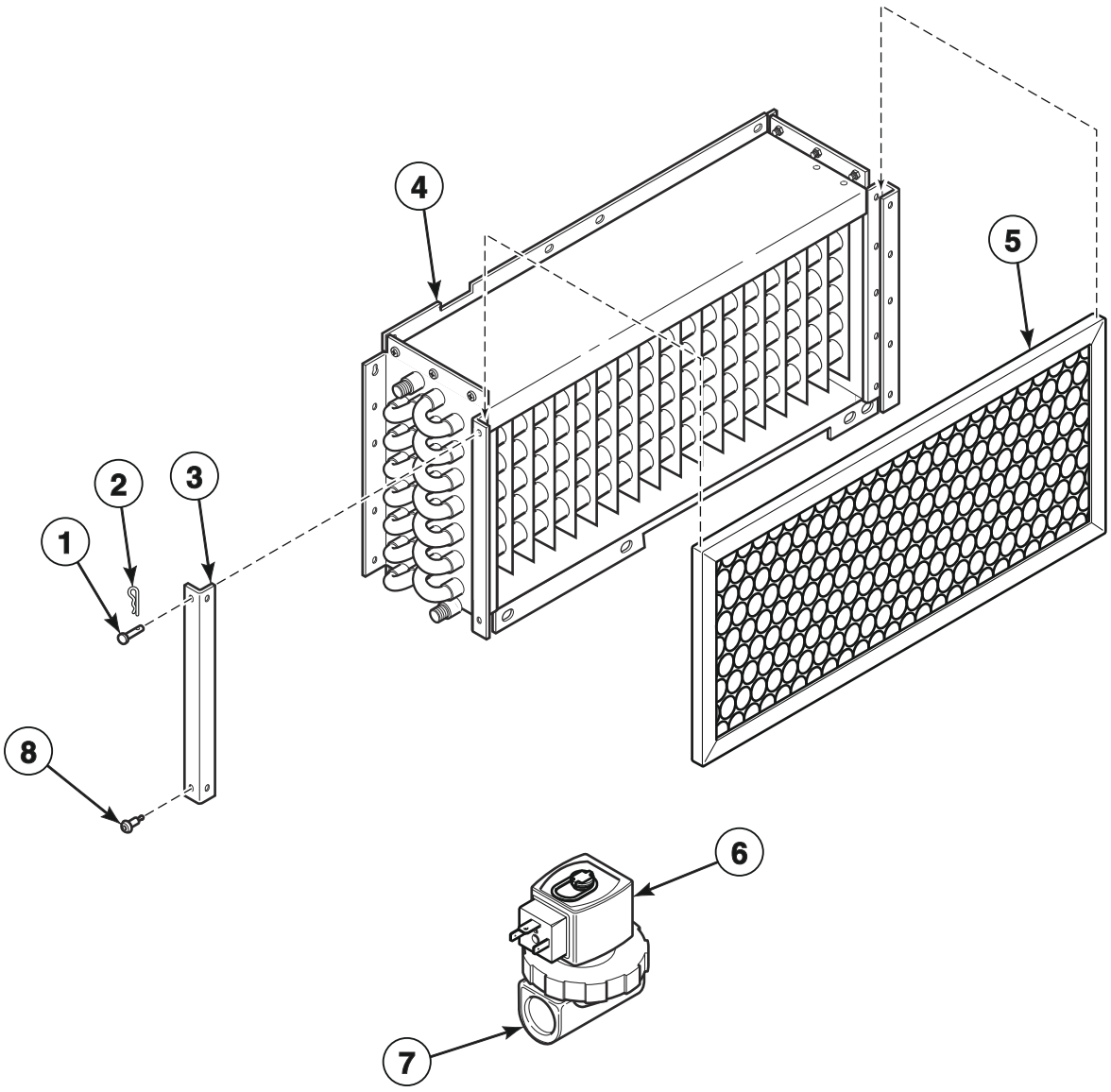

TMB3522P_70614301

© Copyright, Alliance Laundry Systems LLC – DO NOT COPY or TRANSMIT

Steam Heater Components

REF	PART NO.	DESCRIPTION	COMMENTS
	F8382301	DIN Valve Adapter Kit	Use with item 7
	70564302	Stove Limit Bypass Harness	
	F8520703	Steam Valve Harness	
	44304801	Strain Relief	
	70529601	Steam Adapter Kit	IEC models
1	70389201	Clevis Pin	
2	70389301	Hairpin Cotter	
3	70369301	Steam Filter Holder	
4	70369101P	Steam Coil	4 rows
5	70429401	Filter	IEC models
	70036001	Air Filter	North America models
6	F8514701	Coil	120 Volt
	F8514601P	Coil	240 Volt
7	F8322904P	Steam Valve	120 Volt
	F8322906P	Valve	240 Volt
8	70058501	Pop Rivet	

© Copyright, Alliance Laundry Systems LLC – DO NOT COPY or TRANSMIT

Control Tray

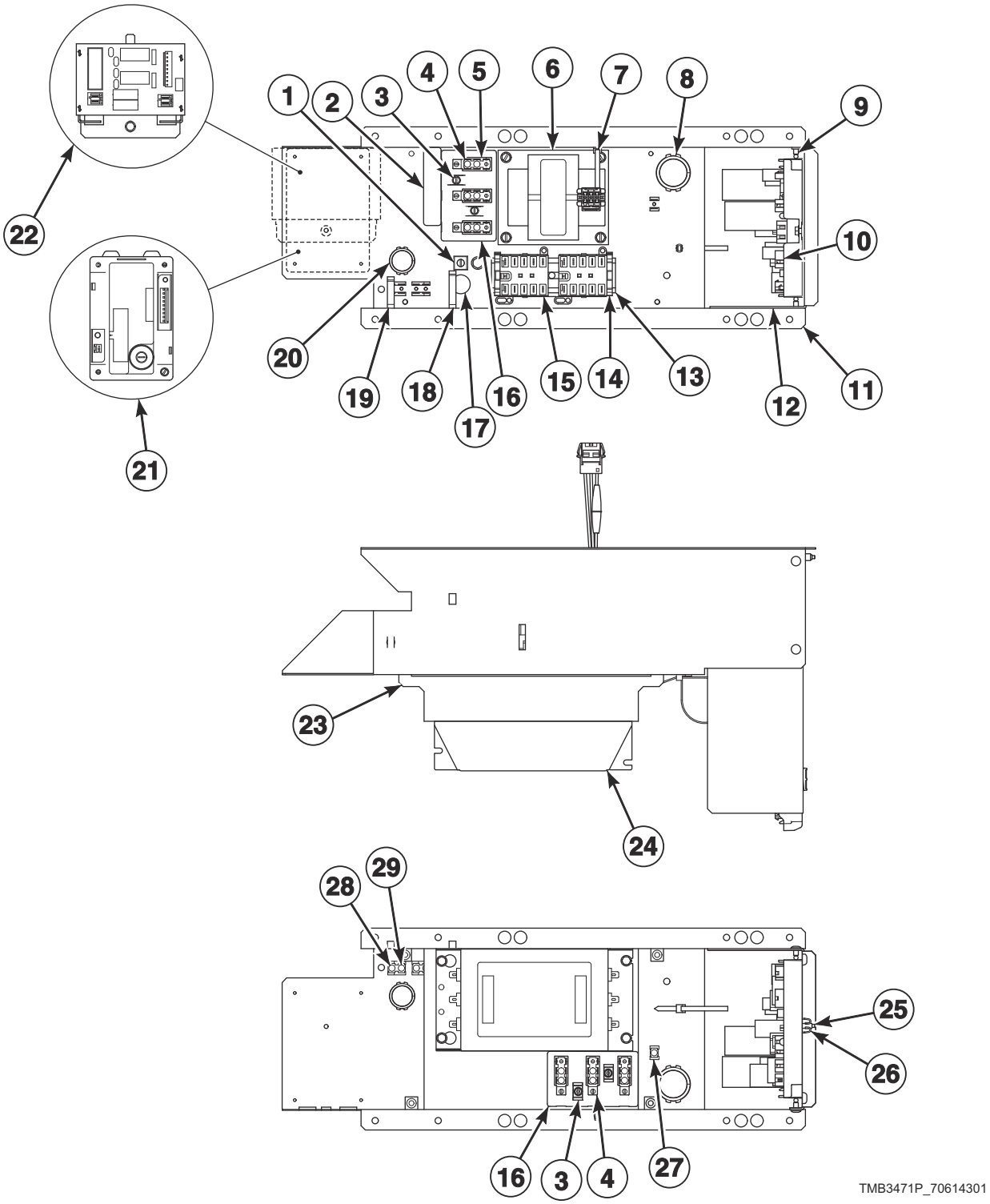

© Copyright, Alliance Laundry Systems LLC – DO NOT COPY or TRANSMIT

Control Tray

REF	PART NO.	DESCRIPTION	COMMENTS
	685837	Screw	Use with item 1
	44088001	Nut	Use with item 1
	70559305	Conversion Kit	X to B voltage
	44357401	EMI Filter Kit	North America models; 100-240 Volt
	44357402	EMI Filter Kit	North America models; 380-480 Volt
1	M411283	Ground Lug Connector	
2	44286803	Label	L1, L2, L3
	44286801	Label	L1, N
	44286802	Wire Label	L1 L2, L1 N
	44286804	Wire Label	L1 L2, L1 N, L1 L2 L3
3	51783	Screw	
4	430642	Terminal Block	
5	70333001	Terminal Block Shield	
6	F8491101	Transformer	380-480 Volt
7	70335601	Cable Tie	
8	70346501	Bushing	
9	70058501	Pop Rivet	
10	70671701	I/O Control Assembly	
11	70492401	Control Tray	
12	70494901	Control Board Control Tray	
13	M412690	DIN Rail	
14	F8449801	End Stop	
15	70482601	Contactor	240 Volt or less: 1 required; 380 Volt or higher: 2 required
16	M413862	Insulator	
17	D516100	Label	
18	F8449501	Wire Clip	
19	F8449502	Wire Clip	
20	70178701	Snap Bushing	
21	70482002P	Ignition Control	IEC gas models
	70482001	Ignition Control	North America gas models
22	70501801	Steam Control Assembly	Steam models
23	70533101	Filter Bracket	
24	F8591601	EMI Filter	IEC models; 100-200 and 200-240 Volt/1 Phase
	F8637501	EMI Filter	IEC models; 380-480 Volt
25	F8206901	Screw	
26	70030501	Expansion Clip	
27	00621SG	Male Tab Terminal	
28	M400003	Pop Rivet	
29	00622SG	Terminal	

© Copyright, Alliance Laundry Systems LLC – DO NOT COPY or TRANSMIT

Accessory Box - Electric 200-240 Volt Models

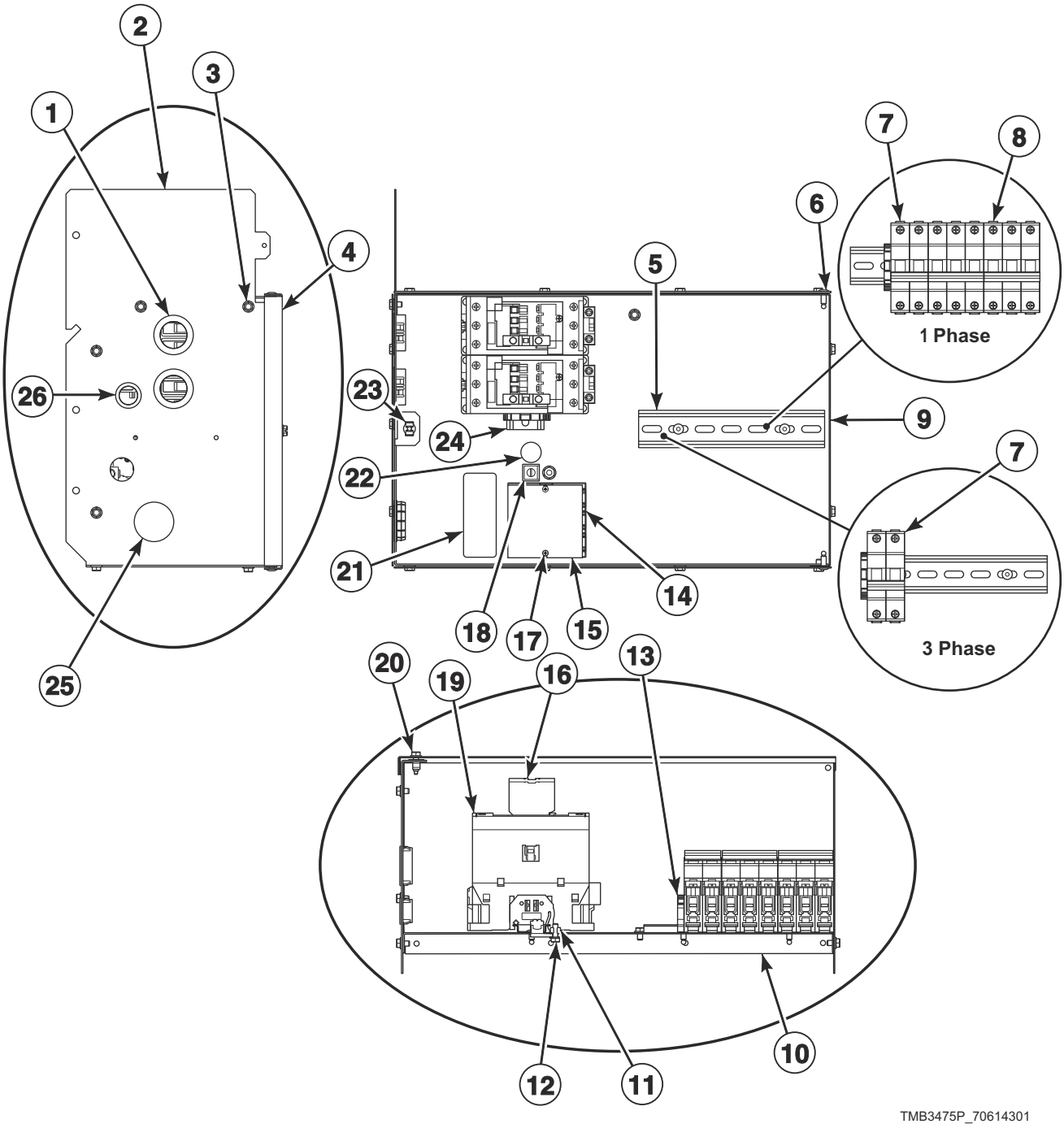

© Copyright, Alliance Laundry Systems LLC – DO NOT COPY or TRANSMIT

Accessory Box - Electric 200-240 Volt Models

REF	PART NO.	DESCRIPTION	COMMENTS
	F8611600	Warning Label Kit	IEC models
	F8611601	Warning Label	
	44334307	Contactor Coil Harness	
	44309001	Harness	North America models; Power distribution block to control circuit breaker
	44309011	Harness	IEC models; Power distribution block to control circuit breaker
	70516106	Harness	Contactor to element
	70516105	Harness	Contactor to element
	70516103	Harness	1 Phase; Power distribution block to circuit breaker/contactor
	70516104	Harness	Power distribution block to circuit breaker/contactor
	70516101	Harness	Power distribution block to circuit breaker/contactor
	70516102	Harness	1 Phase; Power distribution block to circuit breaker/contactor
	44334301	Control Harness	1 Phase
	44334302	Control Harness	3 Phase
1	M402542	Snap Bushing	2 required
2	70540601	Accessory Box Side	Left
3	51780	Screw	
4	70358401	Accessory Box Cover	
5	F8134001	DIN Rail	
6	70058502	Pop Rivet	
7	70488102	Circuit Breaker	25 amp
8	70488104	Circuit Breaker	2 required; 50 amp; 200-208 and 230-240 Volt/1 Phase
9	70540701	Accessory Box Side	Right
10	70540501	Accessory Box Back	
11	44088001	Nut	
12	685837	Screw	
13	F8449801	End Stop	2 required
14	M413865	Power Distribution Block	
15	44014901P	Power Distribution Block Cover	
16	44313201	Auxiliary Contact Block	2 required
17	39733	Screw	
18	M411283	Ground Lug Connector	
19	70482801	Contactor	2 required
20	F8206901	Screw	
21	44286802	Wire Label	1 Phase
	44286803	Label	3 Phase
22	D516100	Label	
23	70030501	Expansion Clip	
24	M412690	DIN Rail	
25	70180001	Plug	
26	M400770	Snap Bushing	

© Copyright, Alliance Laundry Systems LLC – DO NOT COPY or TRANSMIT

Accessory Box - Electric 380-480 Volt Models

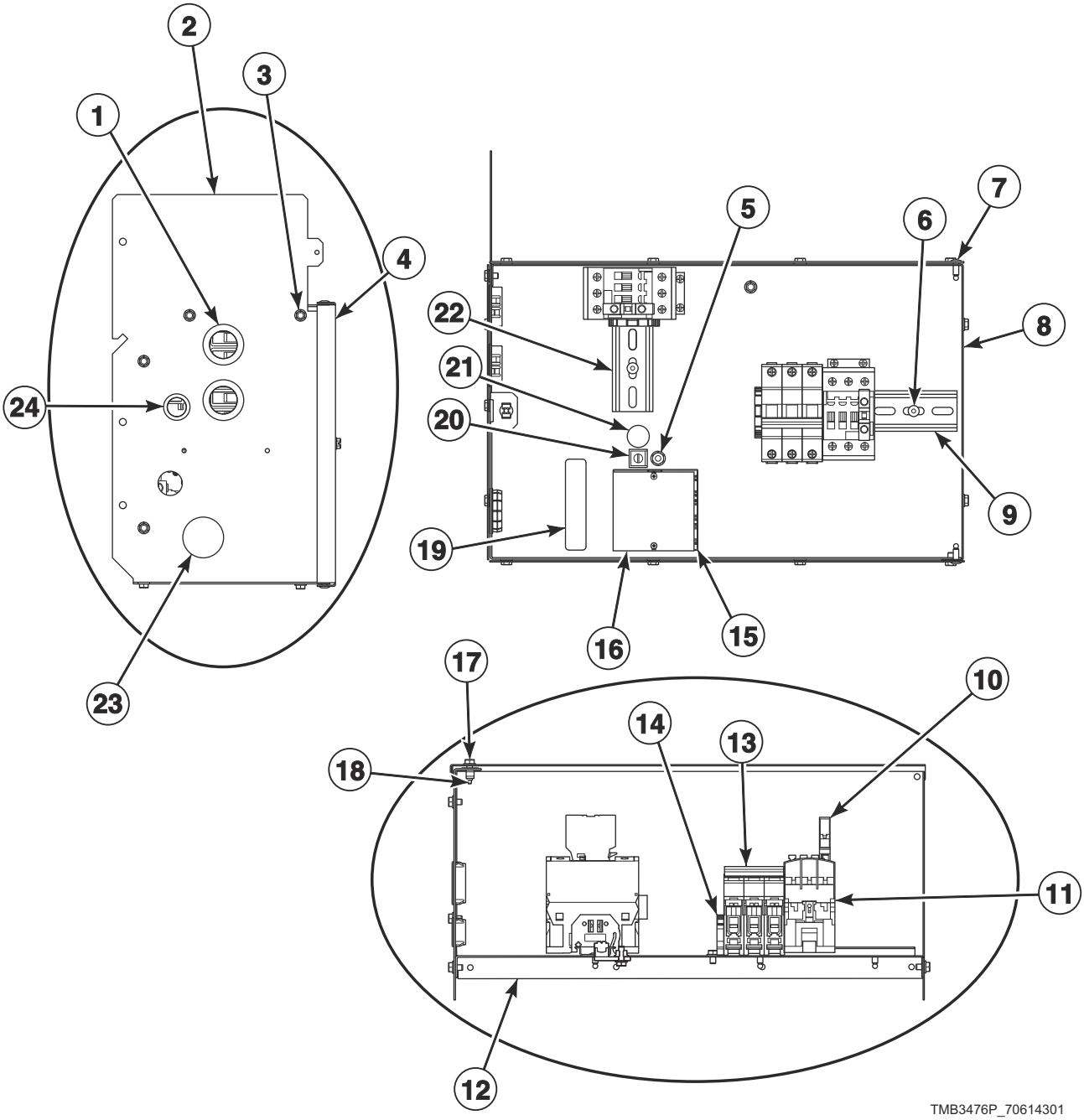

© Copyright, Alliance Laundry Systems LLC – DO NOT COPY or TRANSMIT

Accessory Box - Electric 380-480 Volt Models

REF	PART NO.	DESCRIPTION	COMMENTS
	F8611600	Warning Label Kit	IEC models
	F8611601	Warning Label	
	44334307	Contactor Coil Harness	
	44309002	Harness	North America models; Power distribution block to control circuit breaker
	44309012	Harness	IEC models; Power distribution block to control circuit breaker
	70516106	Harness	Contactor to element
	70516103	Harness	2 required; Power distribution block to circuit breaker/contactor
1	M402542	Snap Bushing	2 required
2	70540601	Accessory Box Side	Left
3	51780	Screw	
4	70358401	Accessory Box Cover	
5	685837	Screw	
	44088001	Nut	
6	70058501	Pop Rivet	
7	70058502	Pop Rivet	
8	70540701	Accessory Box Side	Right
9	F8134001	DIN Rail	
10	44313201	Auxiliary Contact Block	2 required
11	70482701	Contactor	2 required
12	70540501	Accessory Box Back	
13	70488101	Circuit Breaker	25 amp
14	F8449801	End Stop	2 required
15	M413865	Power Distribution Block	
16	44014901P	Power Distribution Block Cover	
17	F8206901	Screw	
18	70030501	Expansion Clip	
19	44286803	Label	
20	M411283	Ground Lug Connector	
21	D516100	Label	
22	M412690	DIN Rail	
23	70180001	Plug	
24	M400770	Snap Bushing	

© Copyright, Alliance Laundry Systems LLC – DO NOT COPY or TRANSMIT

Harnesses

PART NO.	DESCRIPTION	COMMENTS
44316007	Harness	IEC models; 1 Phase; Auxiliary power distribution block to filter harness
44316008	Harness	IEC models; 3 Phase; Auxiliary power distribution block to filter harness
44280007	Configuration Harness	100-120 Volt; Cylinder
44280006	Configuration Harness	100-120 Volt; Fan
44356402	Control Tray Harness Assembly	Electric models
44356401	Control Tray Harness Assembly	Gas models
44356407	Control Tray Harness Assembly	Steam models
44334702	Inverter Contactor Coil Harness	Secondary; 380-480 Volt
44316001	Harness	IEC models; 1 Phase; Main power distribution block to EMI filter harness
44316002	Harness	IEC models; 3 Phase; Main power distribution block to EMI filter harness
44280005	Configuration Harness	3 Phase
44280010	Motor Contactor Power Harness	IEC models; 1 Phase
44280012	Motor Contactor Power Harness	IEC models; 3 Phase
44280001	Motor Contactor Power Harness	North America models; 1 Phase
44280003	Motor Contactor Power Harness	North America models; 3 Phase
44280101	Power Harness	Control and emergency stop connection; 380-480 Volt
44272101	Power Harness	Control and emergency stop connection; 100-120 and 200-240 Volt
204454	Ferrite	Korean models; EMI; Motor circuit, inverter communication circuit
44335301	Inverter Motor Harness	Cylinder
44335302	Inverter Motor Harness	Fan
70608601	EMC Shield	Gas Korean models

© Copyright, Alliance Laundry Systems LLC – DO NOT COPY or TRANSMIT

Labels

PART NO.	DESCRIPTION	COMMENTS
44324201	Caution Label	Australian models; Repeat Ignition Reset
70535101	Caution Label	Vent/install
F8614501	Danger Label	Shock; English/French
F8614301	Hot Surface Warning Label	English/French
F8609001	Hot Surface Warning Label	Icon
F8611601	Warning Label	
70535100	Label Kit	Vent/install
F8614500	Label Kit	Shock
70539601	Notice Label	
F8609501	Notice Label	
D516073	Notice Label	Read instructions; Icon
70538401	Pinch Warning Label	English/French
F8615701	Pinch Warning Label	Icon
F8614201	Shock Warning Label	Icon
70536301	Warning Label	Lint; Australian models
44324101	Warning Label	Fire; Australian models
70534305	Warning Label	Fire; Colombian Spanish; Australian models
44321601	Warning Label	Risk of fire; Icon

© Copyright, Alliance Laundry Systems LLC – DO NOT COPY or TRANSMIT

Notes

© Copyright, Alliance Laundry Systems LLC – DO NOT COPY or TRANSMIT

Parts Index

A

Accessory Box Back
70540501 ..... 59, 61

Accessory Box Cover
70358401 ..... 59, 61

Accessory Box Side
70540601 ..... 59, 61
70540701 ..... 59, 61

Accessory Plate Assembly
F8574202 7
F8574203 7
F8574205 7
F8734601 7

Adapter
70131901 49
70131902 49

Air Filter
70036001 55

Airflow Switch and Arm Bracket
70319602 47

Airflow Switch Arm
70319401 47

Airflow Switch Cover
70356601 47

Airflow Switch Vane
70319201 47

Airflow Switch Wrapper
70356101 47

Anti-Rattle Burner Assembly
70546701 49

App Pay Overlay Kit
44374701 ..... 7, 9

Auxiliary Contact Block
44313201 ..... 59, 61

B

Blower Assembly
70359801P 43, 45

Blower Housing
70020301 45
70215101 ..... 43, 45
70554701 ..... 43, 45

Blower Housing Scroll
70016301 43

Blower Inlet Cone
70014101 45

Blower Motor Mounting Plate
70349601 ..... 43, 45

Bracket
70610501 23
70634201 25

Burner Grill
70188801 49

Burner Orifice
70684105 51
70684106 51
70684107 51
70684108 51
70684109 51
70684110 51
70684111 51
70684113 51
70684114 51
70684116 51
70684126 51
70684128 51
70684130 51
70684131 51
70684133 51
70684134 51
70684135 51
70684137 51
70684139 51
70684142 51

Bushing
70346501 ..... 37, 57

Bypass Harness
44334103 27

C

Cable Tie
70335601 57

Card Reader Plate
F8574204 7

Caution Label
44324201 63
70535101 63

Center Cylinder Seal
70066004 35

Center Hinge Lug Assembly
70640402 19

Center Pan
70565201 37

Center Partition
70252601 37

Central Pay Board Harness
44355604 15

Central Pay Harness
44355601 15
44355606 15

Central Pay Kit
70612702 15

Circuit Breaker
70488101 61
70488102 59
70488105 59

Clevis Pin
70389201 55

Clip Keeper Bracket
70604901 ..... 23, 25

Clip Mount Bracket
70604801 ..... 23, 25

Coil
F8514601P 55
F8514701 55

Coin Box
F160673P 27

N/A items do not appear in index.

© Copyright, Alliance Laundry Systems LLC – DO NOT COPY or TRANSMIT

Coin Chute Assembly
70296401 27
Coin Drop
38963P 11
70441601 11
70441603 11
Coin Drop Assembly
201141 11
210195 11
210196 11
38462P 11
38463 11
38467 11
38519 11
70281102 11
70283102 11
70441602 11
70447301 11
70471601 11
70482401 11
70506901 11
Coin Drop Kit
CK077 11
CK097 11
CK122 13
Coin Identification Paper
38464P 11
38475 11
Coin Meter
F0160737-00 11
Coin Vault Assembly
70529501 27
Coin Vault Switch Harness
44334101 27
Cold Weather Kit
44340301 41
Configuration Harness
44280005 62
44280006 62
44280007 62
Contact Base
F8538101 29
Contact Switch
F8069501 29
Contactor
70482601 57
70482701 61
70482801 59
Contactor Coil Harness
44334307 ..... 59, 61
Control
70511601 41
Control Assembly
70597803 9
70697001P 7
Control Board Control Tray
70494901 57
Control Box Base
44065301 41
Control Box Cover
44065201 41
Control Box Housing
44306701 41
Control Box Top
44307101 41
Control Harness
44334301 59
44334302 59
44334404 41
Control Mounting Bracket
70598601 7
Control Panel
70582901 21
70582902 21
Control Panel Stand Bracket
70641501 25
Control Screen Replacement Kit
F8647701P 7, 9
Control Tray
70492401 57
Control Tray Harness Assembly
44356401 62
44356402 62
44356407 62
Conversion Kit
70559305 57
Cylinder Assembly
70372701P 33
70372702P 33
70372703 33
Cylinder Bearing Stud Plate Assembly
430352 35
Cylinder Guide Tool
263P4 35
Cylinder Shroud
70347201 37
70347202 37

D

Damper and Hinge Exhaust Assembly
70209501 ..... 43, 45
Damper Spacer
70220901 45
Danger Label
F8614501 63
Decal
F8687701 27
DIN Rail
F8134001 ..... 59, 61
M412690 ..... 57, 59, 61
DIN Valve Adapter Kit
F8382301 55
Door Assembly
70597702 ..... 17, 19
70597709 19
Door Catch Kit
70482901 27
Door Glass
M400784P 17, 19
Door Glass Installation Tool
M4221P4 17
Door Glass Label
70650401 ..... 17, 19
70707701 ..... 17, 19
Door Glass Seal Kit
70211901P 17, 19

N/A items do not appear in index.

© Copyright, Alliance Laundry Systems LLC – DO NOT COPY or TRANSMIT

Door Handle
44007902P 17, 19
Door Hinge
70595501 17
70632701W 19
70632703 19
70632707 19
70632709B 19
Door Hinge Lug Assembly
70601008 17
Door Latch
M401223 27
Door Ring Gasket
70296801 ..... 17, 19
Door Switch Actuator
70532105 17
70727901 17
Double Ended Stud
70334701 43
Drive Access Cover
70202501 43
Drive Motor
70478601P 43
70485001P 43
Drive Plate
70571901 43
Drive Rivet
M400713 41
Drywall Screw Magnet Kit
70343101P 33, 35

E

Elbow
70208701 49
70428101 39
Electronic Coin Drop Assembly
70294107 11
70513303 11
70513304 11
70513306 11
70513309 11
70513310 11
70513311 11
70513312 11
70513313 11
70513314 11
70513315 11
70513316 11
70513318 11
Electronic Coin Drop Kit
CK099 13
CK100 13
CK101 13
CK109 13
CK110 13
CK113 13
CK115 13
CK116 13
CK117 13
CK118 13
CK119 13
CK120 13
CK121 13
CK125 13
EMC Shield
70608601 62
Emergency Stop Button Kit
70580301 29
Emergency Stop Bypass Harness
F8519403 29
Emergency Stop Harness
44272401 29
Emergency Stop Label
44012901 29
44012903 29
Emergency Stop Mounting Bracket
70550401 29
Emergency Stop Pushbutton
F200233500 29
EMI Filter
F8591601 57
F8637501 57
EMI Filter Kit
44357401 57
44357402 57
End Cap
70070101 33
End Stop
F8449801 ..... 57, 59, 61
Exhaust Thimble
70017801 43
Expansion Clip
70030501 ..... 7, 9, 15, 27, 57, 59, 61

F

False Front
70000504 21
70024204 21
Fan Motor
70478701P 43, 45
70484901P 43, 45
Ferrite
204454 62
Fill Hose
202799 41
202800 41
Filter
70429401 55
Filter Bracket
70533101 57
Filter Mounting Plate
70551701 41
Fob Communication Harness
F8719302 7
Fob Reader Control Assembly
205135 7
Fod Reader Kit
70666801 15
70666806 15
Front Panel Assembly
70705101 23
70705102 23
70705201 25
70705201W 25
70705202 25
70705202W 25

N/A items do not appear in index.

© Copyright, Alliance Laundry Systems LLC – DO NOT COPY or TRANSMIT

70705204 25
Front Panel Seal
70173401P 23, 25

G

Gas Burner
70229801P 49
Gas Line Assembly
70271201 49
Gas Valve
44154507 49
44154508 49
Gas Valve Bracket
70504101 49
Gas Valve Cover
70429901 49
Gas Valve Harness
44273501 49
Gasket
70289101P 23, 25, 31
70392701P 45
Ground Lug Connector
M411283 ..... 57, 59, 61

H

Hairpin Cotter
70389301 55
Handle and Caps Assembly
70154401 31
Harness
44309001 59
44309002 61
44309011 59
44309012 61
44316001 62
44316002 62
44316007 62
44316008 62
70516101 59
70516102 59
70516103 ..... 59, 61
70516104 59
70516105 59
70516106 ..... 59, 61
Harness Adapter Plate
70523301 ..... 39, 41
Heater Element
70034401P 53
70034402P 53
70034403P 53
70034414P 53
70034415P 53
70034416P 53
High Altitude Orifice Kit
70609903 51
70609904 51
High Voltage Suppression Cable
44239702 49
Hinge Cam Kit
70622401 17
Hold-Down Clip
35865 ..... 23, 25, 37
Hole Plug
70063201 37
Hose
44073304 41
Hose Clamp
36801 41
Hose Fitting
44069101 41
Hot Surface Warning Label
F8609001 63
F8614301 63

I

Idler Wheel Assembly
70050401P 43
Igniter Cover
70159601 49
Ignition Control
70482001 57
70482002P 57
Ignition Keeper Orifice Bracket
70539901 49
Insulator
M413862 57
Interconnect Harness
44334401 41
Inverter Contactor Coil Harness
44334702 62
Inverter Motor Harness
44335301 62
44335302 62
I/O Control Assembly
70671701 57

J

Jumper Bar
70066501 53
Jumper Harness
442295412 53
44281709 53
Jumper Strip
M400869 53

K

Key
70155601 ..... 27, 41
70155602 27
Kickplate
70117601 31

L

Label
D516100 ..... 57, 59, 61

N/A items do not appear in index.

© Copyright, Alliance Laundry Systems LLC – DO NOT COPY or TRANSMIT

44108201 25
44286801 57
44286803 ..... 57, 59, 61
44318201 41
Label Kit
F8614500 63
44318200 41
44324500 41
70534300 23
70535100 63
Leveling Leg Locknut Wrench
205655 37
Lever Arm and Belt Kit
70655101 43
Lever Arm and Bushing Assembly
70653801 43
Light
801432 41
Limit Access Bracket
70554901 45
Limit Thermostat
44328001 45
44328004 49
44328006 53
44328104 49
70530901 45
Lint Panel
70515405 31
70515406W 31
Lint Panel Pivot Plate
70017901 31
Lint Screen
70325601 37
Lock Shim
70342401 27
Lock, Key and Nut Kit
70722301 27
70733701 ..... 27, 41
Lower Hinge Gusset
70632002 19
Lower Lug Assembly
70639302 19
70639304 19
Lower Pan
70332401P 37
Lower Rear Assembly
70493301 43
L.P. Conversion Kit
70550201 49
70551902 49
L.P. Valve
44154504 49

M

Machine ID Control Assembly
203361P 7, 9
Magnet
70343101 31
Magnet Bracket
44290501 31
Male Tab Terminal
00621SG 57
Max Fill Line Label
70707501 ..... 17, 19
Mixing Valve
70519801 41
Mixing Valve Shield Bracket
44306601 41
Motor Conduit Mounting Bracket
70521901 43
Motor Contactor Power Harness
44280001 62
44280003 62
44280010 62
44280012 62
Motor Mount Bracket
70564101 43
Motor Mount Plate
70564201 43
Motor Pulley
70559101 43
Mounting Bracket
70601401 41
70604001 15

N

Nameplate
F8664901 27
F8688801 27
567293 27
567887 27
70685701 27
70685801 27
Notice Label
D516073 63
F8609501 63
70535901 49
70539601 63
70544901 49
Nozzle Bracket
70424201 39
70428601 39
Nut
M400022 ..... 35, 45
M404993 37
M412986 35
M414215 ..... 17, 19
21899 37
23951 31
430576 37
44087101 ..... 7, 9
44087201 ..... 33, 43
44087301 43
44088001 ..... 17, 19, 57, 59, 61
44088801 27
44333202 43
51236 31
56156 43
70030401 ..... 23, 25
70054 ..... 7, 53
N.G. Valve
44154503 49

N/A items do not appear in index.

© Copyright, Alliance Laundry Systems LLC – DO NOT COPY or TRANSMIT

O

Opto Coupler
200674P 11

Orifice Adapter
70379301 49

Orifice Holder Bracket
70248901 49

Overlay
F8734001 7
F8734301 7
F8736601 7

P

Panel Locator
56079 ..... 27, 31

Panel Lock
44089304 27
44089305 27

Pin
70071401 17

Pinch Warning Label
F8615701 63
70538401 63

Pipe Clip
70203701 49

Pipe Plug
70346801 49

Plug
70167601 49
70180001 ..... 41, 59, 61

Pop Rivet
M400003 57
M405750 49
44166601 27
70058501 ..... 17, 19, 23, 25, 31, 37, 55, 57, 61
70058502 ..... 59, 61
70126301 31

Porcelain Touch-Up Paint
122P4P 37

Power Distribution Block
M413865 ..... 59, 61

Power Distribution Block Cover
44014901P 59, 61

Power Harness
44272101 62
44280101 62

Power Sensor Harness
44334402 41

Primary Air Adjustment Sleeve
70239801 49

Pushbutton Switch
70413301 ..... 7, 9, 27

Push-to-Start Switch
801434W 41

R

Rear Bearing Shim
70355001 35

Rear Cylinder Bearing Housing
70013901 35

Rear Cylinder Channel
70257301 33

Rear Cylinder Channel Plate
70257401 33

Rear Cylinder Seal
70013702 35

Rear Cylinder Seal Support
70506401 35

Rear Lint Panel
70565301 31

Rear Panel
70564901 35
70564902 35

Reed Switch Assembly
F8066804 31

Rivet
70614201 25
70743501 31

Roller and Seal Kit
70616701 37

Roller Catch Arm
70030301 31

Roller Catch Spacer
70030201 31

Roller Catch Wheel
70297601 31

Roller Seal
70443601 37

Roller Shaft
70249501 37

Roller Support Bracket
70328301 37

S

Screw
FR004022 17
F430144 43
F8206901 ..... 57, 59, 61
F8458801 19
M400661 ..... 17, 19
M405188 ..... 21, 49
M411072 ..... 15, 25, 27
05161 49
39733 ..... 7, 9, 27, 31, 59
430497 ..... 31, 33, 37, 39, 41, 45, 47, 49, 53
430757 31
44349101 ..... 17, 19
51780 ..... 15, 39, 41, 59, 61
51783 57
62588 33
685837 ..... 57, 59, 61
70072801 31
70126101 45
70126104 43
70132301 31
70247701 37
70391101 33
70436301 17
70442101 ..... 17, 19
70501301 43
70508301 43
70546301 43

N/A items do not appear in index.

© Copyright, Alliance Laundry Systems LLC – DO NOT COPY or TRANSMIT

70576101 17
70640201 19
70640301 19
802822 19
804608 41

Sensor Harness
44334406 41

Sheet Metal Edge Gasket
70015709 37
70015710 37

Shield
44326801 41

Shock Warning Label
F8614201 ..... 41, 63
F8614401 41

Side Panel
70253801DG 37
70253801WP 37
70253802DG 37
70611101W 37
70640901DG 37
70640902DG 37
70640902W 37

Snap Bushing
M400770 ..... 49, 59, 61
M402542 ..... 59, 61
70178701 ..... 39, 57

Spacer
70488403 43

Spark Electrode
70548701P 49

Spray Nozzle
70427801 39

Spray Nozzle Hose
70427701 39

Spray Paint
298P4P 37

Spring
70571801 43

Spring Catch Bracket
70543401 43

Standoff
70569603 43

Steam Adapter Kit
70529601 55

Steam Coil
70369101P 55

Steam Control Assembly
70501801 57

Steam Filter Holder
70369301 55

Steam Valve
F8322904P 55

Steam Valve Harness
F8520703 55

Stove Back
70371501 49

Stove Connectors Cover
70365201 53

Stove Grill
70214901 53

Stove Limit Bypass Harness
70564302 55

Stove Limit Harness
70564301 49
70564303 53

Stove Partition
70357201 53

Stove Top and Sides
70333401 49
7052601 53

Strain Relief
44304801 55

Street Elbow
F422304 49
H86070034 49

Support Bearing
70448701 35

Support Housing Bearing Assembly
430260P 35

Switch
70411901 47

Switch Bracket
70356301 47
70508501 31

T

Tensioning Bracket
70569501 43

Terminal
00622SG 57

Terminal Block
430642 57

Terminal Block Shield
70333001 57

Thermistor
M414704 45
44064701 39

Thermistor Plate
70424401 39

Thermostat Cover
M414477 49

Top Pan
70641201 37

Top Panel
70586401 37

Transformer
F8491101 57
202757 15
202758 15

Transformer Harness
44272301 15
44272302 15

Trunnion and Seal Kit
70564801 33

Tube Assembly
70427601 39

Tumbler Dolly Kit
M4379P4 37

U

Union Tee
70427901 39

N/A items do not appear in index.

© Copyright, Alliance Laundry Systems LLC – DO NOT COPY or TRANSMIT

Upper Hinge Gusset
70632001 19
Upper Lug Assembly
70639301 19
70639303 19
USB IR Interface Kit
203346 15
USB-Serial Interface Assembly
203440 ..... 7, 9

V

Valve
F8322906P 55
Vend Activation Harness
44334002 ..... 7, 9
Vend Plate
F8632501 7

W

Warning Label
F8611601 ..... 59, 61, 63
44321601 63
44324101 63
44324501 41
44324502 41
70534301 ..... 23, 25
70534302 ..... 23, 25
70534305 63
70536301 63
Warning Label Kit
F8611600 ..... 59, 61
Washer
M400991 ..... 35, 45
70261401 37
70411301 33
Water Valve Harness
44334405 41
Wire Clip
F8449501 57
F8449502 57
Wire Guard
201595P 11
Wire Label
44286802 ..... 57, 59
44286804 57
Wireless Control Label
204692 ..... 7, 9

N/A items do not appear in index.

© Copyright, Alliance Laundry Systems LLC – DO NOT COPY or TRANSMIT