Tumble Dryers

50 Pound Capacity

18 Digit Model Numbers with 4 and 5 in 13th Position

Refer to Page 3 for Model Numbers

Parts

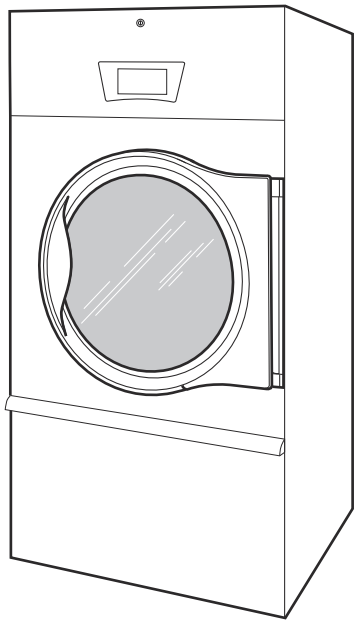

TMB1287C_70621701

Alliance™ Laundry Systems

www.alliancelaundry.com

Part No. 70621701R9
November 2025

Table of Contents

Title	Page
Parts Ordering Information	2
Serial Plate Location	2
Machine Identification	3
Product Overview - Heat Source and Voltage	4
Control Box	6
Touch Control - Vend Models with V in the 7th Position	8
Touch Control - OPL Models with V in the 7th Position	10
Coin Drops	12
Coin Drop Kits	14
Central Pay and Card Reader Components	16
Cabinet Front Panels and Components	18
Lower Cabinet Front Components	20
Lint Panel Components	22
Cabinet Components	24
Rear Panel and Belt Guard Components	26
Door and Hinge Components - Design 4 H and S Models	28
Door and Hinge Components - Design 5 Models	30
Cylinder and Trunnion Components	32
Bearing Components	34
Drive Motor Components	36
Blower and Exhaust Components	38
Airflow Switch Assembly	40
Gas Heater Components	42
Burner Orifices	44
Electric Heater Components	46
Control Tray	48
Accessory Box - Electric 200-240 Volt Models	50
Accessory Box - Electric 380-480 Volt Models	52
Harnesses	54
Labels	55
Parts Index	57

© Copyright 2025, Alliance Laundry Systems LLC

All rights reserved. No part of the contents of this book may be reproduced or transmitted in any form or by any means without the expressed written consent of the publisher.

Parts Ordering Information

If literature or replacement parts are required, contact the source from whom the machine was purchased or contact Alliance Laundry Systems at (920) 748-3950 for the name and address of the nearest authorized parts distributor.

For technical assistance, call the number listed below:

(920) 748-3121 Ripon, Wisconsin

Serial Plate Location

When calling or writing about your product, be sure to mention model and serial numbers. Model and serial numbers are located on serial plate(s) as shown.

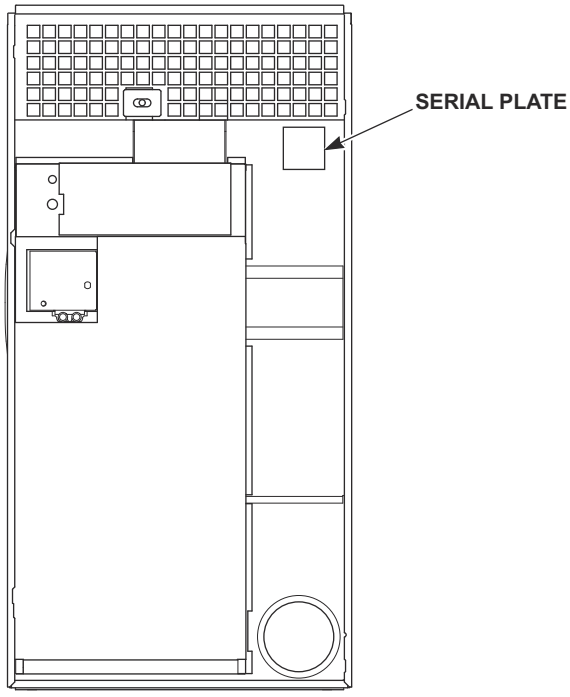

TMB2622N_70621701

© Copyright, Alliance Laundry Systems LLC – DO NOT COPY or TRANSMIT

Machine Identification

Information in this manual is applicable to these machines:

BG050D
BG050E
BG050L
BG050N
BR050E
BU050E
BU050L
BU050N
HA050E
HA050L
HA050N
HG050D
HG050E
HG050L
HG050N
HH050E
HH050L
HH050N
HJ050D
HJ050E
HJ050L
HJ050N
HK050E
HK050L
HK050N
HL050E
HL050L
HR050E
HT050E
HT050L
HT050N
HU050E
HU050L
HU050N
PG050E
PG050L
PG050N
PR050E
PU050E
PU050L
PU050N
SA050E
SA050L
SA050N
SG050D
SG050E
SG050L
SG050N
SH050E
SH050L
SH050N
SJ050D
SJ050E
SJ050L
SJ050N
SK050E
SK050L
SK050N
SL050E
SL050L
SR050E
ST050E
ST050L
ST050N
SU050E
SU050L
SU050N

© Copyright, Alliance Laundry Systems LLC – DO NOT COPY or TRANSMIT

Product Overview - Heat Source and Voltage

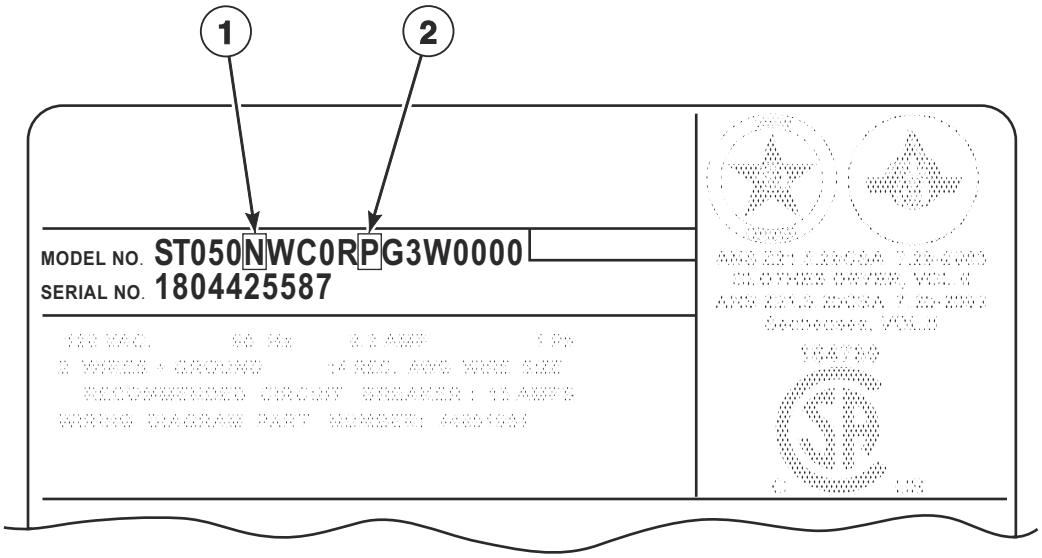

TMB3523P_70621701

© Copyright, Alliance Laundry Systems LLC – DO NOT COPY or TRANSMIT

Product Overview - Heat Source and Voltage

REF	PART NO.	DESCRIPTION	COMMENTS
1	-	Heat Source	D: Liquid Petroleum Gas (L.P.) E: Electric L: Liquid Petroleum Gas (L.P.) N: Natural Gas (N.G.)
2	-	Voltage	B:100-120 Volt/50-60 Hertz/1 Phase; Gas models E: 230-240 Volt/50-60 Hertz/1 Phase; Electric models F: 200-208 Volt/50-60 Hertz/3 Phase; Electric models G: 230-240 Volt/50-60 Hertz/3 Phase; Electric models H: 380 Volt/50-60 Hertz/3 Phase; Electric models J: 400-415 Volt/50-60 Hertz/3 Phase; Electric models K: 440 Volt/50-60 Hertz/3 Phase; Electric models L: 460-480 Volt/50-60 Hertz/3 Phase; Electric models N: 440-480 Volt/50-60 Hertz/3 Phase; Gas models P: 380-415 Volt/50-60 Hertz/3 Phase; Gas models X: 200-240 Volt/50-60 Hertz/1-3 Phase; Gas models

© Copyright, Alliance Laundry Systems LLC – DO NOT COPY or TRANSMIT

Control Box

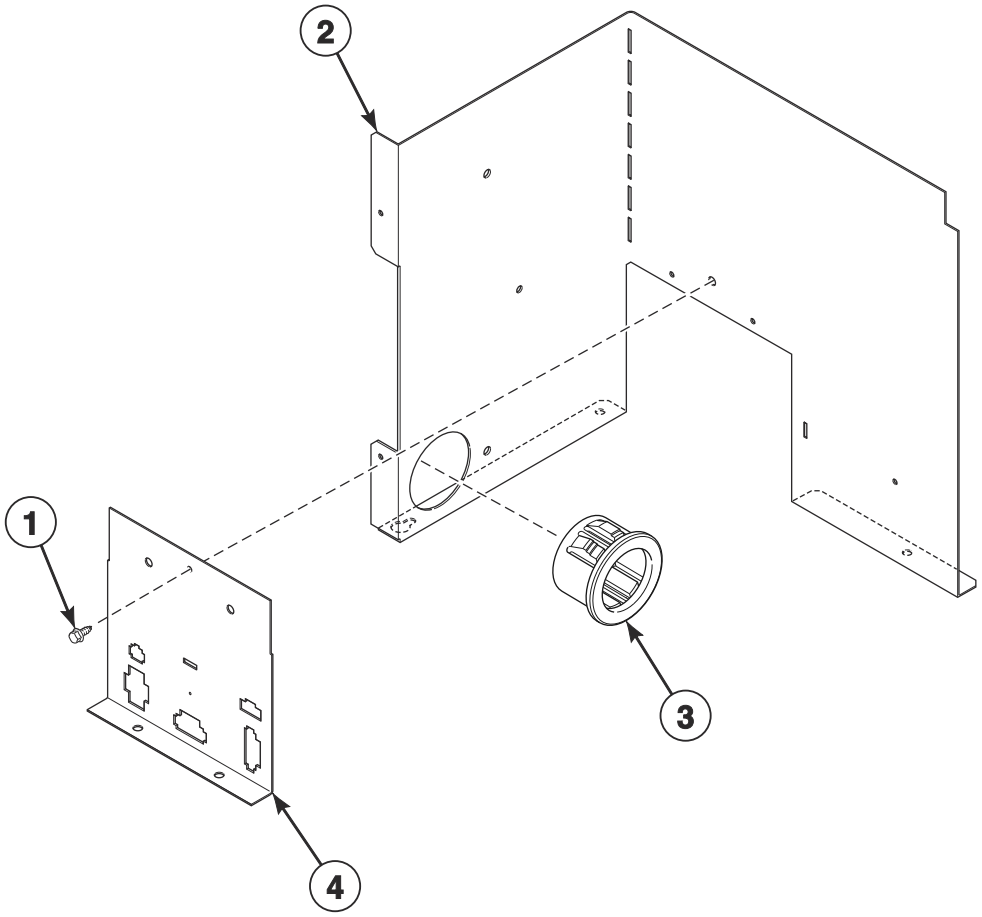

TMB3710P_70621701

© Copyright, Alliance Laundry Systems LLC – DO NOT COPY or TRANSMIT

Control Box

REF	PART NO.	DESCRIPTION	COMMENTS
	44334203	Main Harness	
1	430497	Screw	
2	44344101	Control Box Wrap	Design 4 H and S models
	44119101	Control Box Wrap	Design 5 models
3	D503235	Snap Bushing	Design 4 H and S models
4	70307007	Harness Mounting Plate	

© Copyright, Alliance Laundry Systems LLC – DO NOT COPY or TRANSMIT

Touch Control - Vend Models with V in the 7th Position

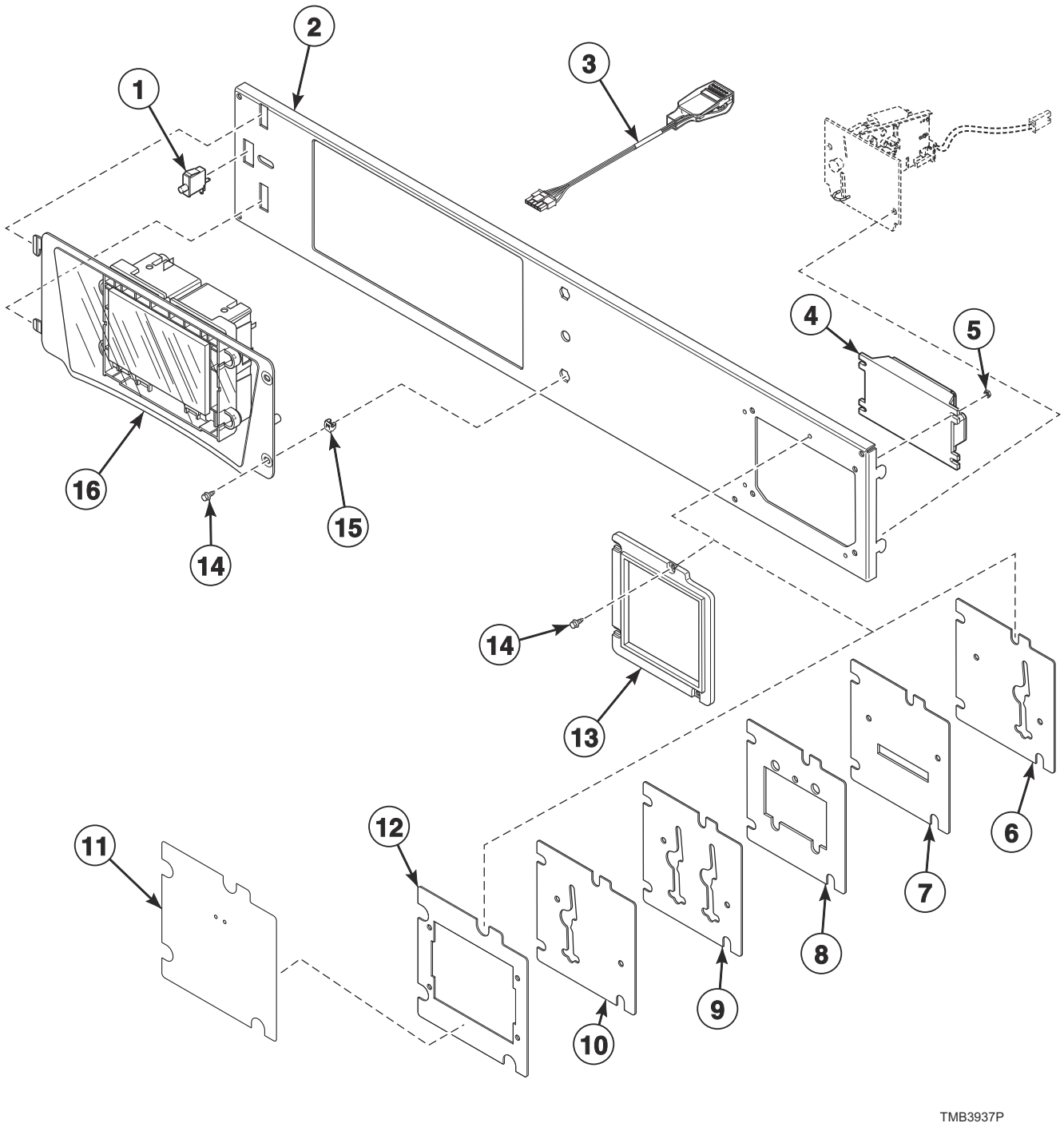

© Copyright, Alliance Laundry Systems LLC – DO NOT COPY or TRANSMIT

Touch Control - Vend Models with V in the 7th Position

REF	PART NO.	DESCRIPTION	COMMENTS
	44334002	Vend Activation Harness	
	F8719302	Fob Communication Harness	
	44087101	Nut	2 required; Coin
	44071201	Nut	4 required; Prep for card and central pay
	203440	USB-Serial Interface Assembly	
	44374701	App Pay Overlay Kit	
	F8647701P	Control Screen Replacement Kit	
1	70413301	Pushbutton Switch	
2	44346101	Control Mounting Bracket	Design 4 H and S models
3	203361P	Machine ID Control Assembly	
4	205135	Fob Reader Control Assembly	
5	70054	Nut	
6	F8574205	Accessory Plate Assembly	World drop
7	F8574204	Card Reader Plate	Card
8	F8574106	Accessory Plate	Use with item 5
9	F8574203	Accessory Plate Assembly	Dual drop
10	F8574202	Accessory Plate Assembly	Single drop
11	F8734001	Overlay	S models; FOB
	F8734301	Overlay	H models; FOB
	F8736601	Overlay	H models; FOB
12	F8734601	Accessory Plate Assembly	FOB
13	F8632501	Vend Plate	
14	39733	Screw	
15	70030501	Expansion Clip	2 required
16	70697001P	Control Assembly	

© Copyright, Alliance Laundry Systems LLC – DO NOT COPY or TRANSMIT

Touch Control - OPL Models with V in the 7th Position

B and P Models

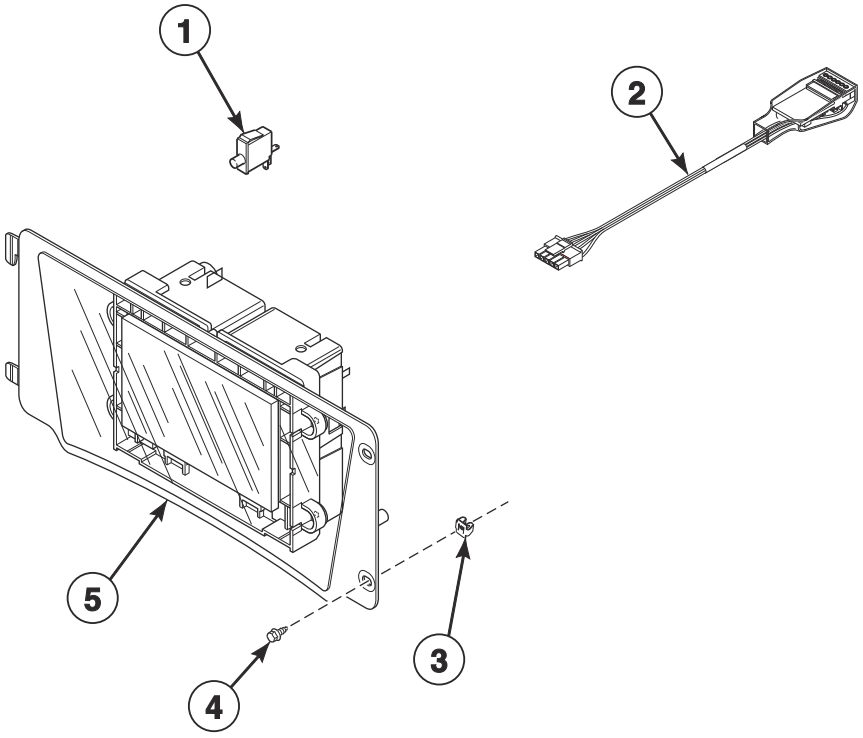

TMB3828P_70621701

© Copyright, Alliance Laundry Systems LLC – DO NOT COPY or TRANSMIT

Touch Control - OPL Models with V in the 7th Position

REF	PART NO.	DESCRIPTION	COMMENTS
	44334002	Vend Activation Harness	
	44087101	Nut	2 required
	204692	Wireless Control Label	2 required
	203440	USB-Serial Interface Assembly	
	44374701	App Pay Overlay Kit	
	F8647701P	Control Screen Replacement Kit	
1	70413301	Pushbutton Switch	
2	203361P	Machine ID Control Assembly	
3	70030501	Expansion Clip	2 required
4	39733	Screw	
5	70697003	Control Assembly	

© Copyright, Alliance Laundry Systems LLC – DO NOT COPY or TRANSMIT

Coin Drops

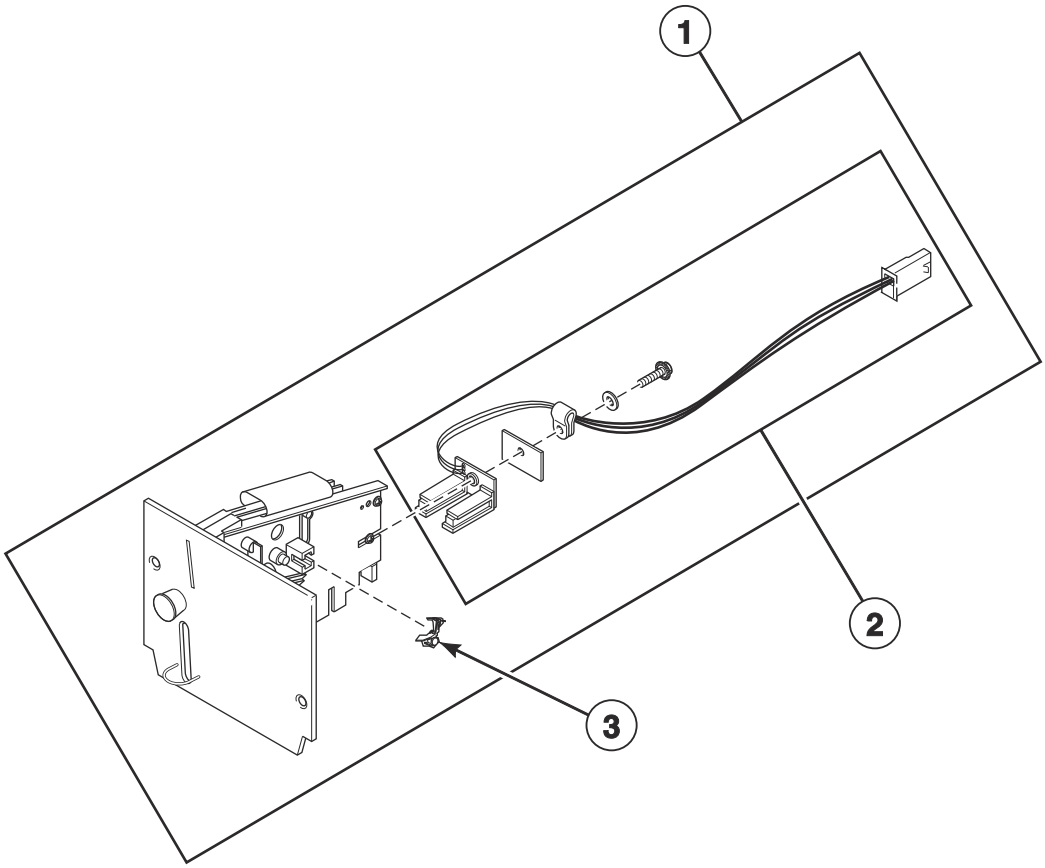

TMB3699P_70621701

© Copyright, Alliance Laundry Systems LLC – DO NOT COPY or TRANSMIT

Coin Drops

REF	PART NO.	DESCRIPTION	COMMENTS
1	70441601P	Coin Drop	Single; U.S.A.; $.25
	38475	Coin Drop Assembly	Single; Japan; 100 yen
	38464P	Coin Drop Assembly	Single; Canada; .25
	CK077	Coin Drop Kit	Single; Taiwan; 10 NT
	70506901	Coin Drop Assembly	Single; Singapore; $1.00 NEW
	70441603	Coin Drop	Dual; U.S.A.; $.25 and $1.00
	38519	Coin Drop Assembly	Dual; Japan; 100 yen and 500 yen
	70441602	Coin Drop Assembly	Dual; Canada; .25 and 1.00
	38467	Coin Drop Assembly	Dual; Australia; $0.20 and $1.00
	CK111	Coin Drop Kit	Dual; Australia; $1.00 and $2.00
	70283102	Coin Drop Assembly	Dual; 0.20 and 0.50 Euro
	210195	Coin Drop Assembly	Dual; 0.20 and 1.00 Euro
	210196	Coin Drop Assembly	Dual; 0.50 and 1.00 Euro
	F0160737-00	Coin Meter	Dual; 0.50 and 2.00 Euro
	70281102	Coin Drop Assembly	Dual; Taiwan; 10 and 50 NT
	70482401	Coin Drop Assembly	Dual; New Zealand ; $1.00 and $2.00
	38462P	Coin Drop Assembly	Single; Token; STD 118-1
	38463	Coin Drop Assembly	Single; Token; STD 118-5
	38963P	Coin Drop	Single; Token STD 118-16
	CK097	Coin Drop Kit	Single; Jeton 08MS
	201141	Coin Drop Assembly	Single; Token; Jeton wh121
	70471601	Coin Drop Assembly	Single; Token; 7K
	70513310	Electronic Coin Drop Assembly	Japan and Thailand coins
	70513304	Electronic Coin Drop Assembly	Australia, New Zealand, Hong Kong and South Korea coins
	70513303	Electronic Coin Drop Assembly	Denmark, Norway and Euro coins
	70513306	Electronic Coin Drop Assembly	Mexico, Ecuador and U.S.A. coins
	70294107	Electronic Coin Drop Assembly	Lithuania, Latvia and Euro coins
	70513311	Electronic Coin Drop Assembly	China and Malaysia coins
	70513318	Electronic Coin Drop Assembly	South African 1, 2 and 5 rand coins
	70513309	Electronic Coin Drop Assembly	Euro coins
	70513312	Electronic Coin Drop Assembly	Russia coins
	70513313	Electronic Coin Drop Assembly	Phillipines coins
	70513314	Electronic Coin Drop Assembly	Thailand coins
	70513315	Electronic Coin Drop Assembly	Chile coins
	70513316	Electronic Coin Drop Assembly	Singapore coins
2	200674P	Opto Coupler	
3	201595P	Wire Guard	

© Copyright, Alliance Laundry Systems LLC – DO NOT COPY or TRANSMIT

Coin Drop Kits

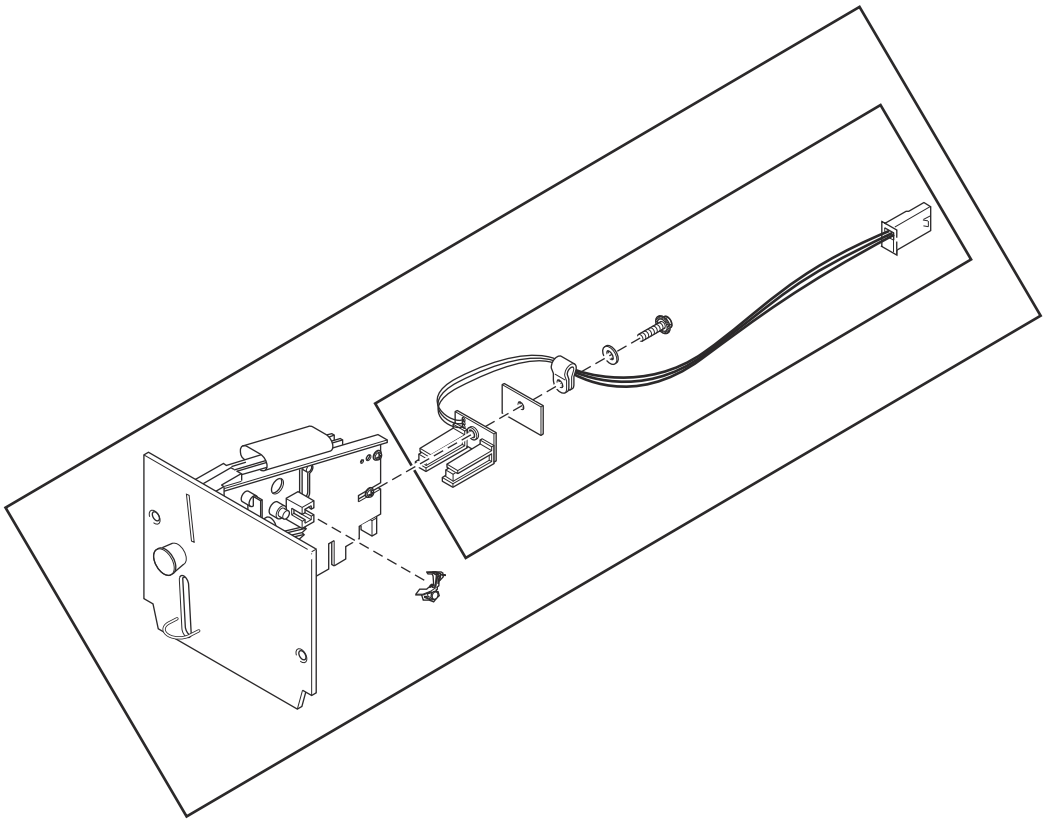

TMB3699PA_70621701

© Copyright, Alliance Laundry Systems LLC – DO NOT COPY or TRANSMIT

Coin Drop Kits

REF	PART NO.	DESCRIPTION	COMMENTS
	CK115	Electronic Coin Drop Kit	United States and Canada
	CK099	Electronic Coin Drop Kit	Australia (default), New Zealand, Hong Kong, South Korea and Malaysia
	CK100	Electronic Coin Drop Kit	United Kingdom (default) and Europe
	CK101	Electronic Coin Drop Kit	Europe (default), Denmark and Norway
	CK125	Electronic Coin Drop Kit	South Africa
	CK109	Electronic Coin Drop Kit	Euro
	CK110	Electronic Coin Drop Kit	Mexico (default), Ecuador and United States
	CK113	Electronic Coin Drop Kit	Japan and Taiwan
	CK116	Electronic Coin Drop Kit	Malaysia (default) and China
	CK117	Electronic Coin Drop Kit	Russia
	CK118	Electronic Coin Drop Kit	Philippine
	CK119	Electronic Coin Drop Kit	Thailand
	CK120	Electronic Coin Drop Kit	Chile
	CK121	Electronic Coin Drop Kit	Singapore
	CK122	Coin Drop Kit	New Zealand; 1.00 and 2.00

© Copyright, Alliance Laundry Systems LLC – DO NOT COPY or TRANSMIT

Central Pay and Card Reader Components

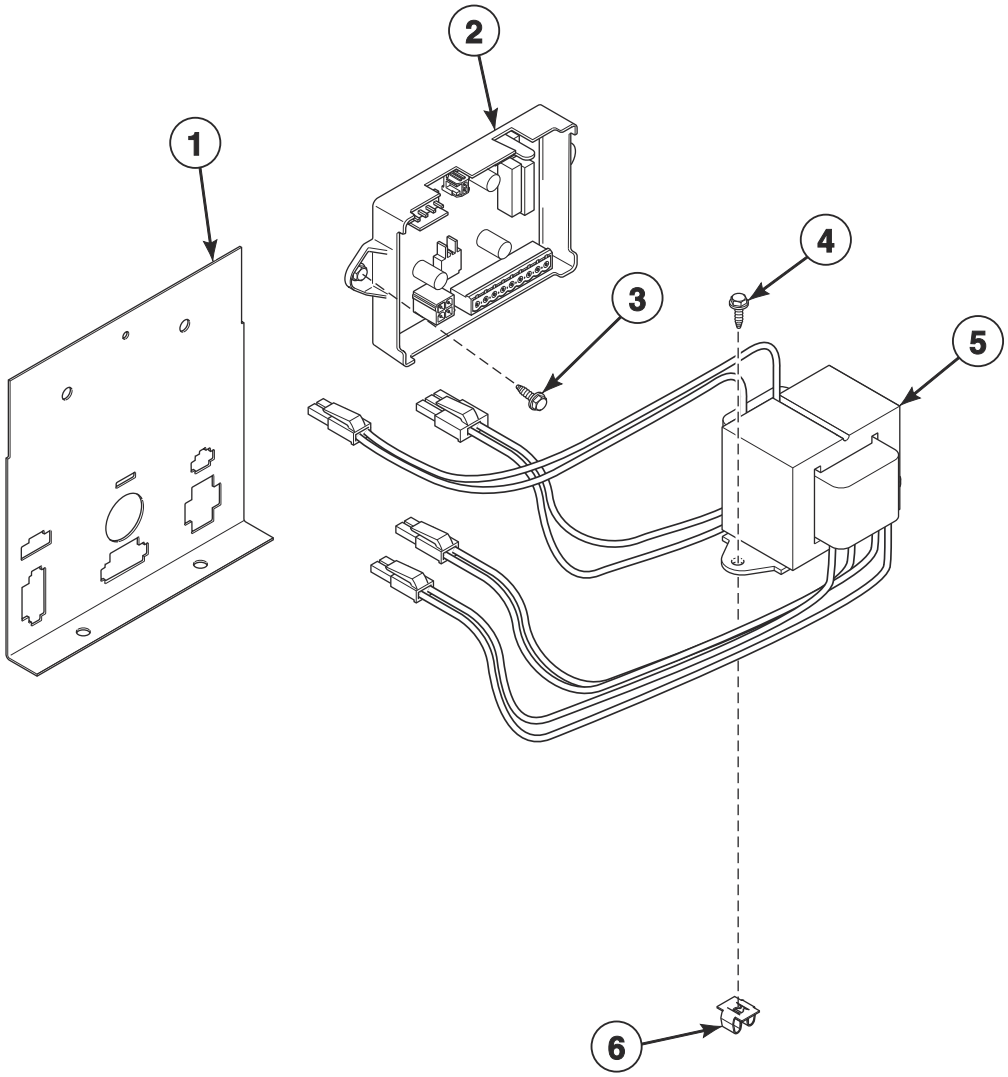

TMB3712P_70621701

© Copyright, Alliance Laundry Systems LLC – DO NOT COPY or TRANSMIT

Central Pay and Card Reader Components

REF	PART NO.	DESCRIPTION	COMMENTS
	44355602	Central Pay Harness	Routes from central pay board to contol tray
	44272301	Transformer Harness	100-120 Volt; Routes from transformer to I/O Control Assembly; Card and central pay
	44272302	Transformer Harness	200-480 Volt; Routes from transformer to I/O Control Assembly; Card and central pay
	44355604	Central Pay Board Harness	Routes from central pay board to transformer
	44355606	Central Pay Harness	Routes from central pay board to front end control
	203346	USB IR Interface Kit	
1	70307007	Harness Mounting Plate	
2	44359001	Central Pay Kit	100-120 Volt
	44359003	Central Pay Kit	200-480 Volt
3	51780	Screw	2 required
4	F8206901	Screw	
5	202757P	Transformer	100-120 Volt; Card and central pay
	202758P	Transformer	200-480 Volt; Card and central pay
6	70030501	Expansion Clip	2 required

© Copyright, Alliance Laundry Systems LLC – DO NOT COPY or TRANSMIT

Cabinet Front Panels and Components

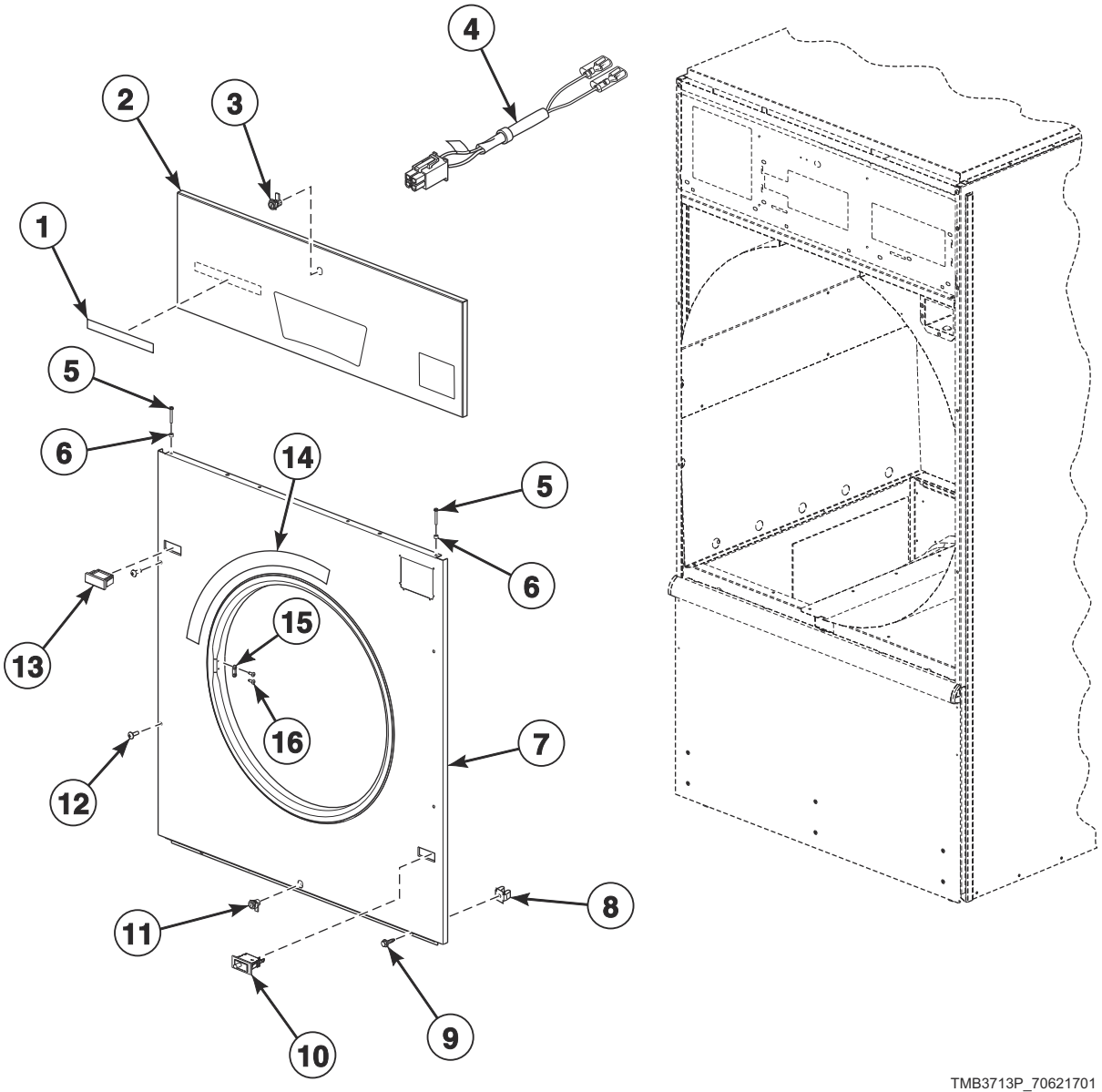

TMB3713P_70621701

© Copyright, Alliance Laundry Systems LLC – DO NOT COPY or TRANSMIT

Cabinet Front Panels and Components

REF	PART NO.	DESCRIPTION	COMMENTS
	M4379P4	Tumbler Dolly Kit	
	44334103	Bypass Harness	Card and central pay
	70482901	Door Catch Kit	
1	F8664901	Nameplate	Design 4 S models
	F8688901	Nameplate	Design 5 S models
	F8687701	Decal	H models
	567293	Nameplate	B models
	567887	Nameplate	P models
2	44344001	Control Panel	Stainless steel; Coin and card
	44344002	Control Panel	Stainless steel; Central pay and OPL
3	70733701	Lock, Key and Nut Kit	RL001 key code; Black; Control panel; Optional if same key is to be used for control lock
	70155601	Key	RL001; Chrome
	44089304	Panel Lock	RL001; Chrome
4	44334101	Coin Vault Switch Harness	
5	70275801	Screw	4 required
6	56079	Panel Locator	2 required
7	44346301	Front Panel	Stainless steel; Coin; Design 4 models
	44346302	Front Panel	Stainless steel; Card; Design 4 models
	44367301	Front Panel	Stainless steel; Coin; Design 5 models
	44367302	Front Panel	Stainless steel; Card, central pay and OPL; Design 5 models
	44367401W	Front Panel	Coin; Design 5 H and S models
	44367405W	Front Panel	Card and central pay; Design 5 H and S models
8	70030501	Expansion Clip	
9	M411072	Screw	4 required; Front panel; Bottom
10	70413301	Pushbutton Switch	Door switch
11	70733701	Lock, Key and Nut Kit	RL001 key code; Black; Lint panel; Optional if same key is to be used for control lock
	70155601	Key	RL001; Chrome
	70722301	Lock, Key and Nut Kit	RL002 key code; Lint panel; Standard coin and card models
	70155602	Key	RL002; Chrome
	44089305	Panel Lock	RL002; Chrome
12	70033502	Screw	2 required for stainless steel panels in addition to 2 of 70182601 Screw
	70182601	Screw	2 required for stainless steel panels in addition to 2 of 70033502 Screw; 4 required for painted panels
13	44057801B	Switch Hole Plug	Black; For stainless steel; Design 4 models
14	70534401	Warning Label	English
	70534402	Warning Label	French
	70534405	Warning Label	Colombian Spanish
	70534400	Label Kit	Warning; IEC models
15	M401223	Door Latch	2 required
16	44166601	Pop Rivet	2 per door latch

© Copyright, Alliance Laundry Systems LLC – DO NOT COPY or TRANSMIT

Lower Cabinet Front Components

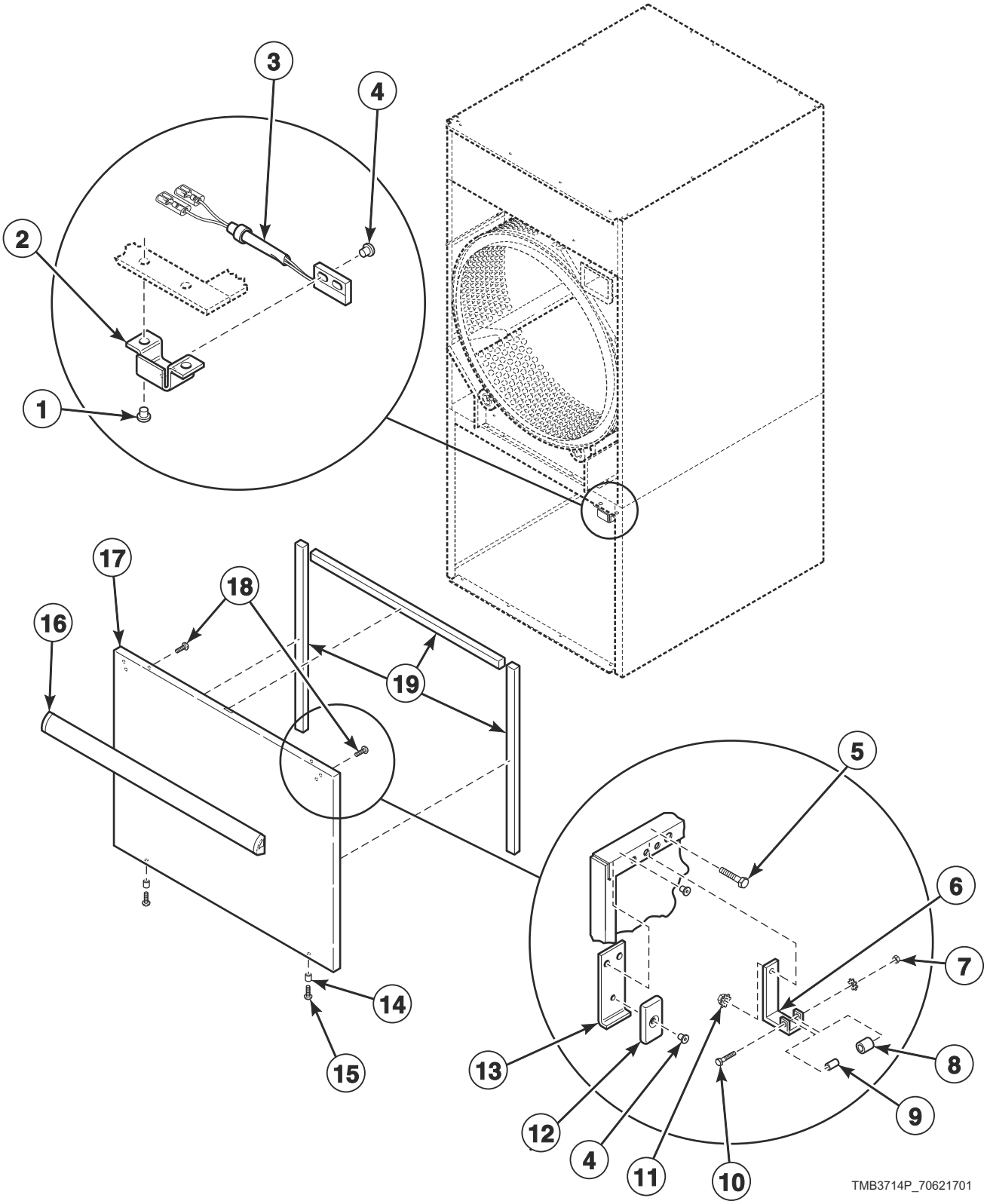

© Copyright, Alliance Laundry Systems LLC – DO NOT COPY or TRANSMIT

Lower Cabinet Front Components

REF	PART NO.	DESCRIPTION	COMMENTS
	70404001	Roller Bracket Assembly	Includes items 6-10
1	70058501	Pop Rivet	
2	44296101	Switch Bracket	
3	F8066804	Reed Switch Assembly	
4	70743501	Rivet	
5	70132301	Screw	Attaching roller catch
6	70030301	Roller Catch Arm	
7	23951	Nut	
8	70297601	Roller Catch Wheel	
9	70030201	Roller Catch Spacer	
10	70072801	Screw	
11	51236	Nut	Attaching roller catch
12	70343101	Magnet	
13	44290501	Magnet Bracket	
14	56079	Panel Locator	
15	39733	Screw	
16	70154405P	Handle and Caps Assembly	Black; Includes endcaps
17	44293605	Lint Panel	Stainless steel
	44293604W	Lint Panel	Design 5 H and S models
18	430757	Screw	
19	70289101P	Gasket	Sold per foot

© Copyright, Alliance Laundry Systems LLC – DO NOT COPY or TRANSMIT

Lint Panel Components

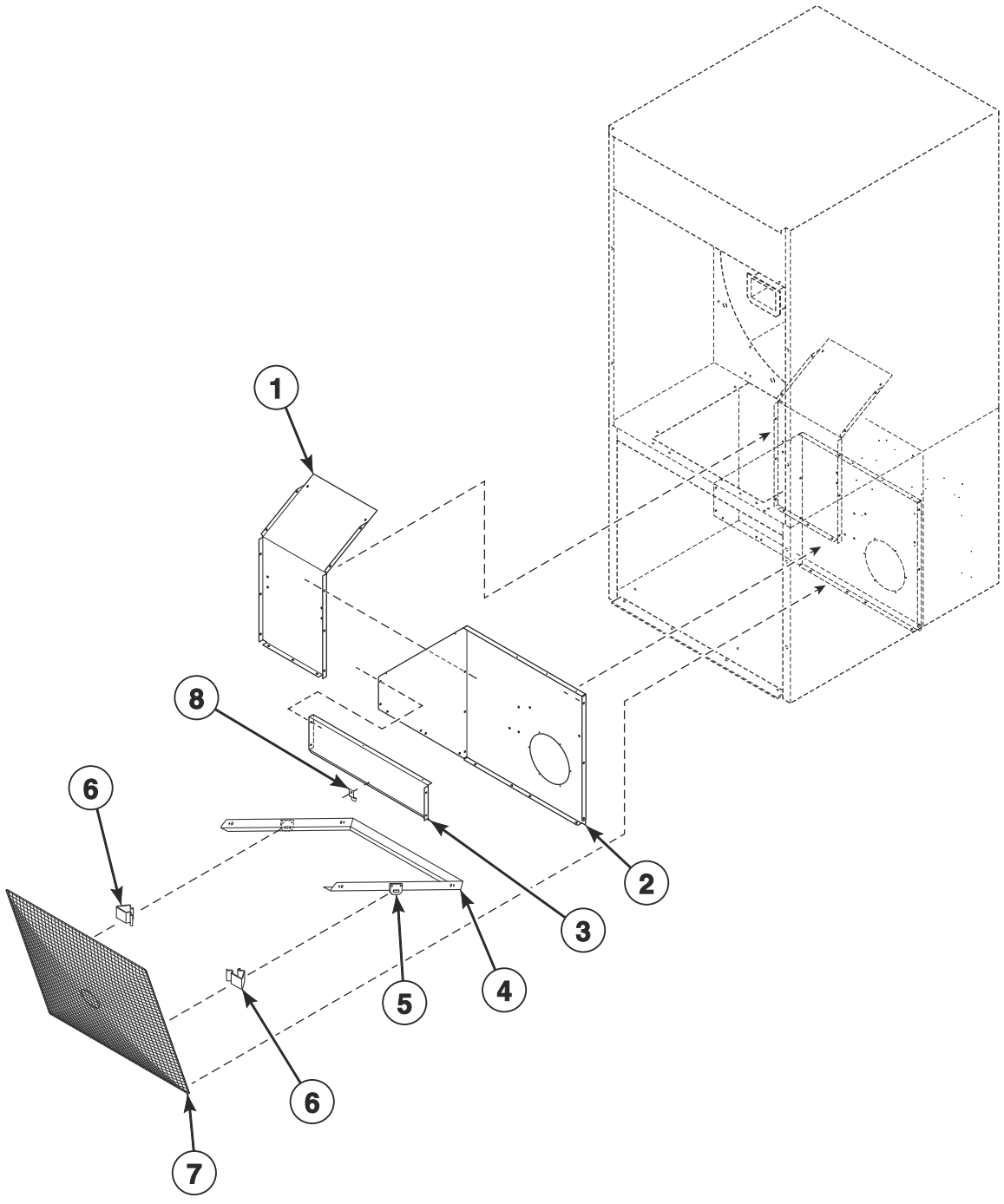

TMB3637P_70621701

© Copyright, Alliance Laundry Systems LLC – DO NOT COPY or TRANSMIT

Lint Panel Components

REF	PART NO.	DESCRIPTION	COMMENTS
1	44298102	Lint Panel	Left
2	44300901	Lint Panel	Right
3	44298901	Lint Screen Top Rail	
4	44325301	Lint Bracket	
5	44140202	Lint Clip Bracket	2 required
6	35865	Hold-Down Clip	2 required
7	44063601	Lint Screen	
8	H96418413	Lint Screen Clip	

© Copyright, Alliance Laundry Systems LLC – DO NOT COPY or TRANSMIT

Cabinet Components

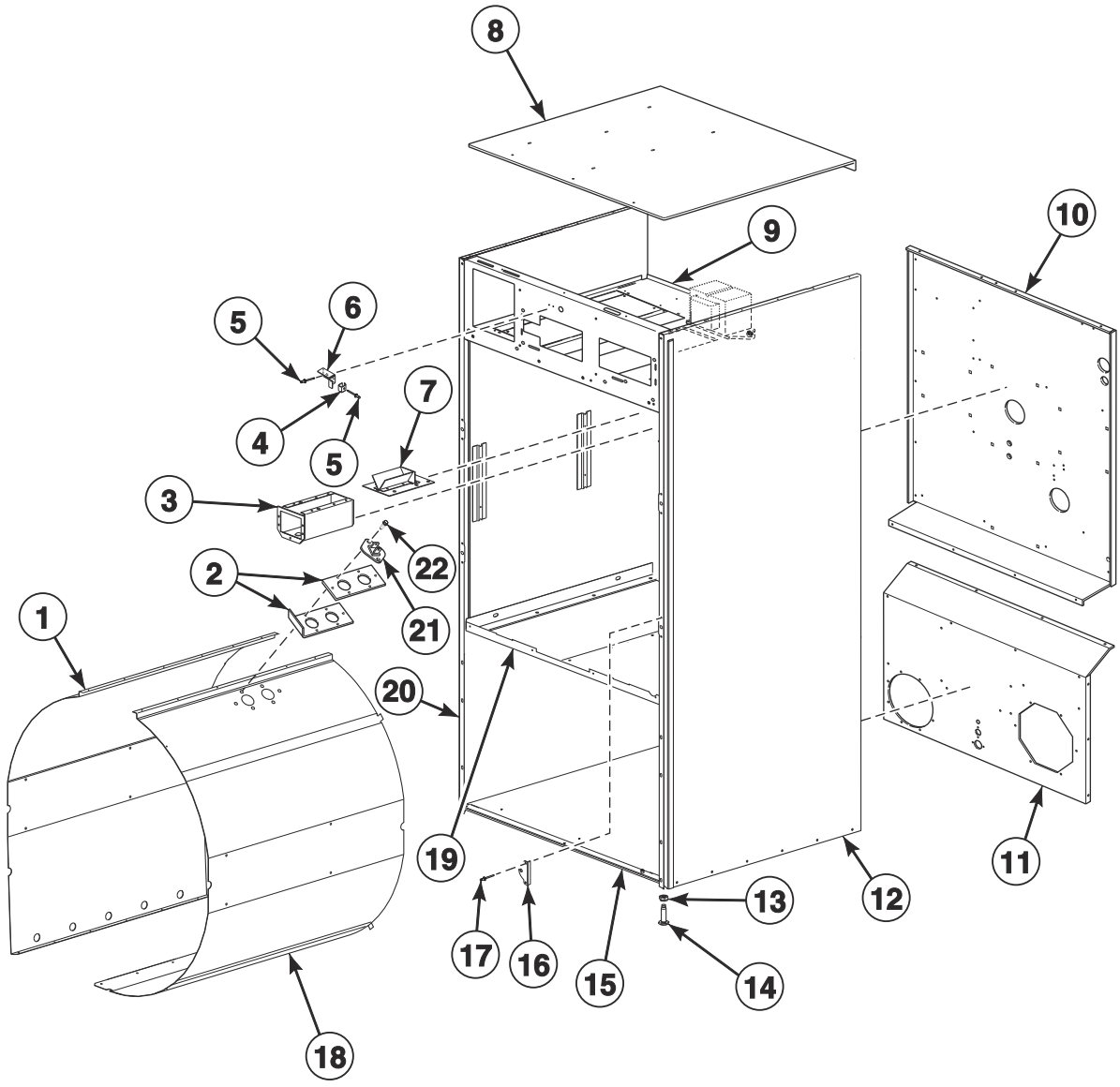

TMB3715P_70621701

© Copyright, Alliance Laundry Systems LLC – DO NOT COPY or TRANSMIT

Cabinet Components

REF	PART NO.	DESCRIPTION	COMMENTS
	298P4P	Spray Paint	White
	122P4P	Porcelain Touch-Up Paint	White
	205655	Leveling Leg Locknut Wrench	Use with item 13
	430497	Screw	Use with items 12 and 20
1	44304602	Baffle	Left
2	44068101	Thermistor Plate	
	44068102	Thermistor Plate	Use as a shim
3	70529501	Coin Vault Assembly	
	F160673P	Coin Box	Optional equipment; Includes lock and key
4	431318	Control Door Latch	
5	M400003	Pop Rivet	
6	70654501	Lock Catch Bracket	
7	70296401	Coin Chute Assembly	Wide
8	44346201	Top Panel	Gas models
	44346202	Top Panel	Electric models
9	44345101	Top Pan	Gas models; Design 4
	44352401	Top Pan	Electric models; Design 4
	44304101	Top Pan	Design 5 models
10	44297001	Upper Rear Panel	
11	44300001	Lower Rear Panel	
12	44348501W	Side Panel	Right; Design 4 S models
	44367601W	Side Panel	Right; Design 5 H and S models
	44367601DG	Side Panel	Right; B and P models
13	21899	Nut	Right
14	70247701	Screw	Leveling leg
15	44304301	Bottom Pan	
16	70604701	Lug Mount Bracket	2 required; Design 4 S models
	70634301	Lug Mount Bracket	2 required; Design 5 H and S models
17	70058501	Pop Rivet	4 required; Also use with items 12 and 20
18	44304702	Baffle	Right
19	44304201	Center Pan	
20	44367502W	Side Panel	Left; H and S models
	44367501DG	Side Panel	Left; B and P models
21	44064701	Thermistor	
22	51780	Screw	

© Copyright, Alliance Laundry Systems LLC – DO NOT COPY or TRANSMIT

Rear Panel and Belt Guard Components

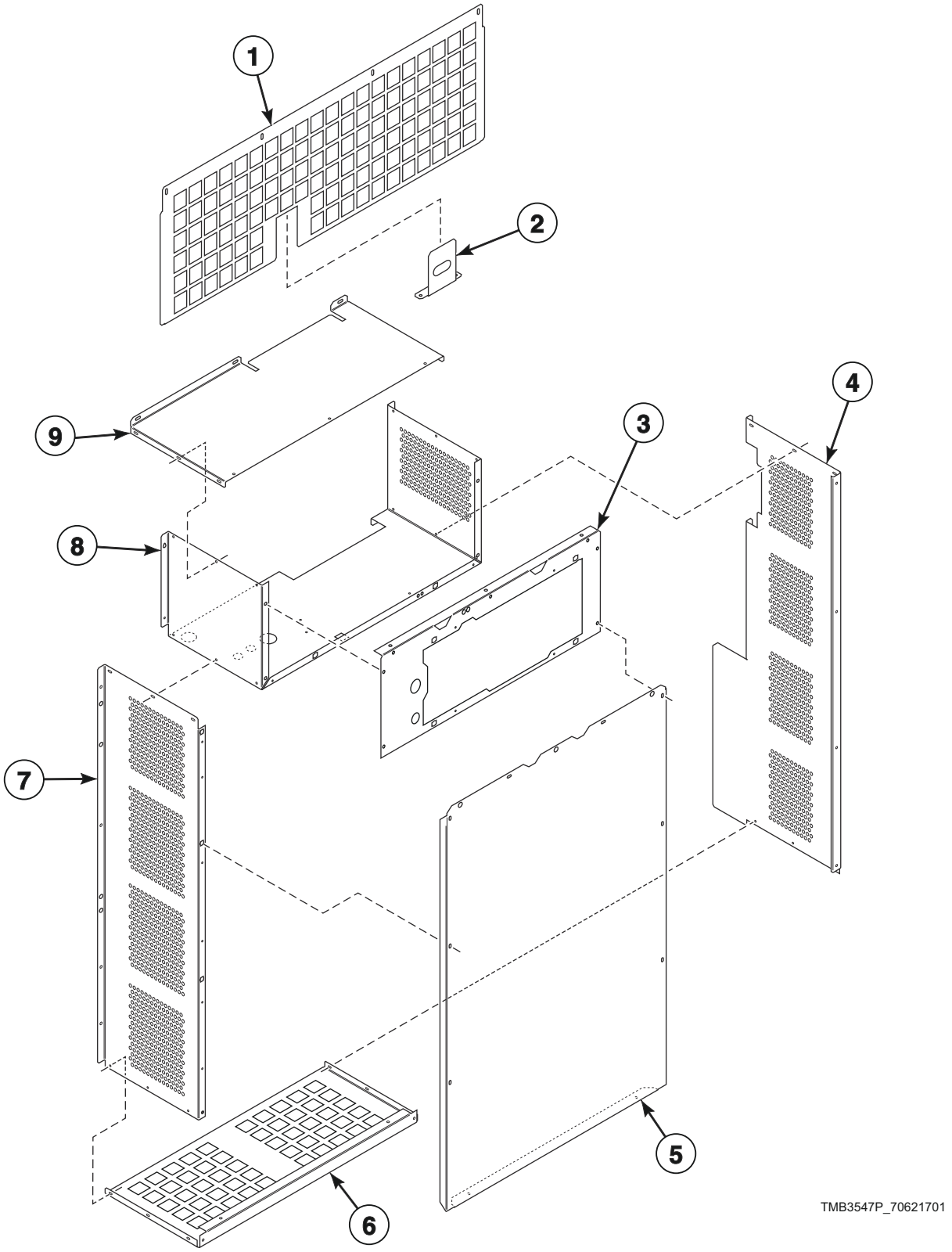

© Copyright, Alliance Laundry Systems LLC – DO NOT COPY or TRANSMIT

Rear Panel and Belt Guard Components

REF	PART NO.	DESCRIPTION	COMMENTS
1	44300301	Stove Grate	Gas models
	44305601	Stove Grate	Electric models
2	44327603	Pipe Bracket	Gas models
3	44332201	Belt Guard	Middle
4	44298301	Belt Guard Side Panel	Left
5	44269201	Guard Panel	Rear
6	44298401	Belt Guard	Bottom
7	44301101	Belt Guard Side Panel	Right
8	44332301	Guard Panel	Middle
9	44314301	Belt Guard	Top

© Copyright, Alliance Laundry Systems LLC – DO NOT COPY or TRANSMIT

Door and Hinge Components - Design 4 H and S Models

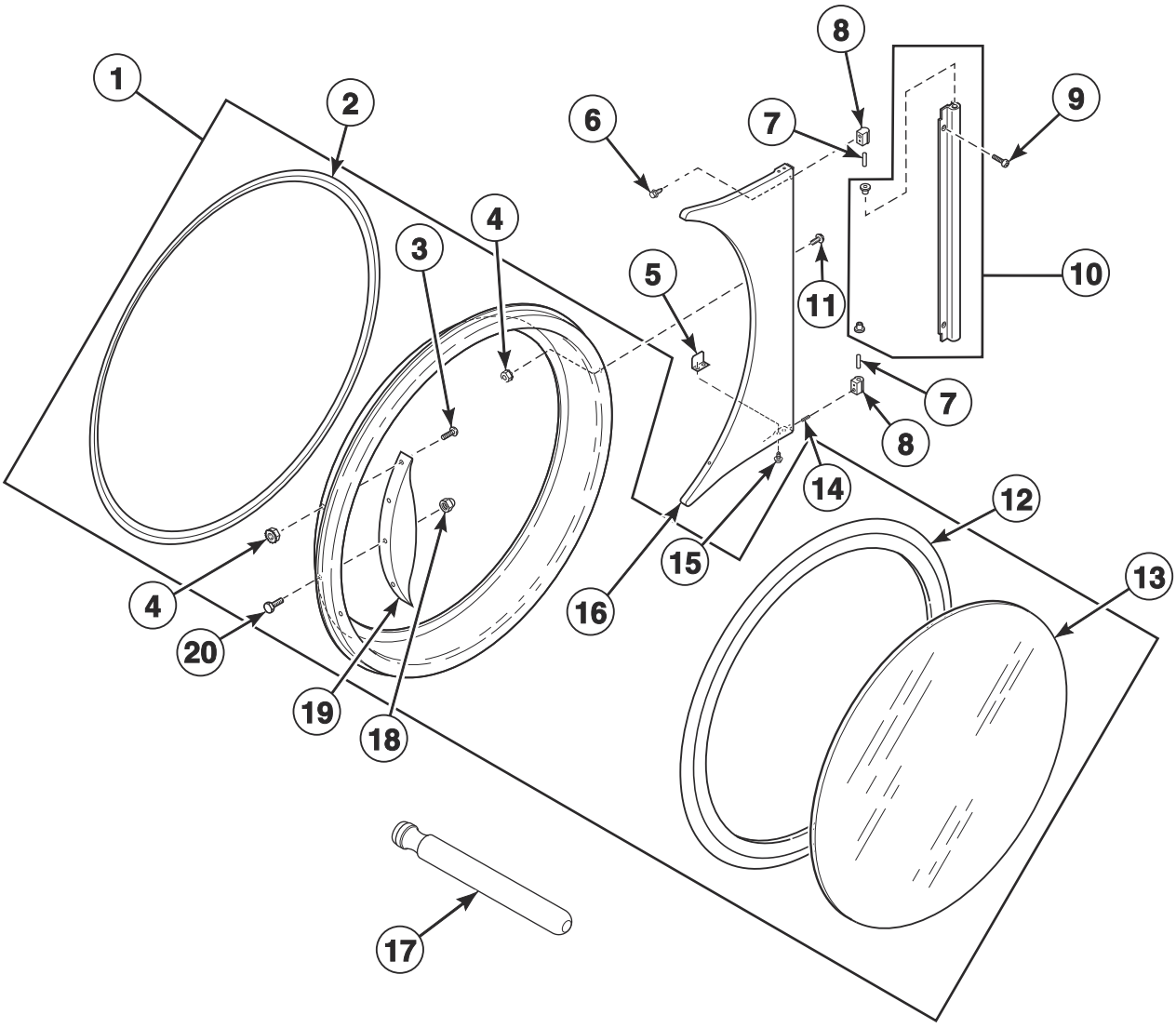

TMB3726P_70621701

© Copyright, Alliance Laundry Systems LLC – DO NOT COPY or TRANSMIT

Door and Hinge Components - Design 4 H and S Models

REF	PART NO.	DESCRIPTION	COMMENTS
	70650401	Door Glass Label	H models
	70707701	Door Glass Label	S models
	70707501	Max Fill Line Label	
1	44354702P	Door Assembly	Chrome
2	70296802	Door Ring Gasket	
3	70442101	Screw	4 required
4	44088001	Nut	
5	70727901	Door Switch Actuator	Bottom
6	70576101	Screw	
7	70071401	Pin	
8	70622401	Hinge Cam Kit	Chrome
9	FR004022	Screw	
10	70601005	Door Hinge Lug Assembly	Chrome
11	44349101	Screw	
12	70211902P	Door Seal Kit	Use Loctite 414 for seal
13	44008401P	Door Glass	
14	70436301	Screw	
15	70058501	Pop Rivet	
16	70596603	Door Hinge Assembly	Chrome
17	M4221P4	Door Glass Installation Tool	
18	M414215	Nut	For door strike; Mounts between door strike screw and door handle
19	44007901	Door Handle	
20	M400661	Screw	Door Strike

© Copyright, Alliance Laundry Systems LLC – DO NOT COPY or TRANSMIT

Door and Hinge Components - Design 5 Models

BG, BR, BU, HG, HT, PG, PR, PU, SG and ST Models

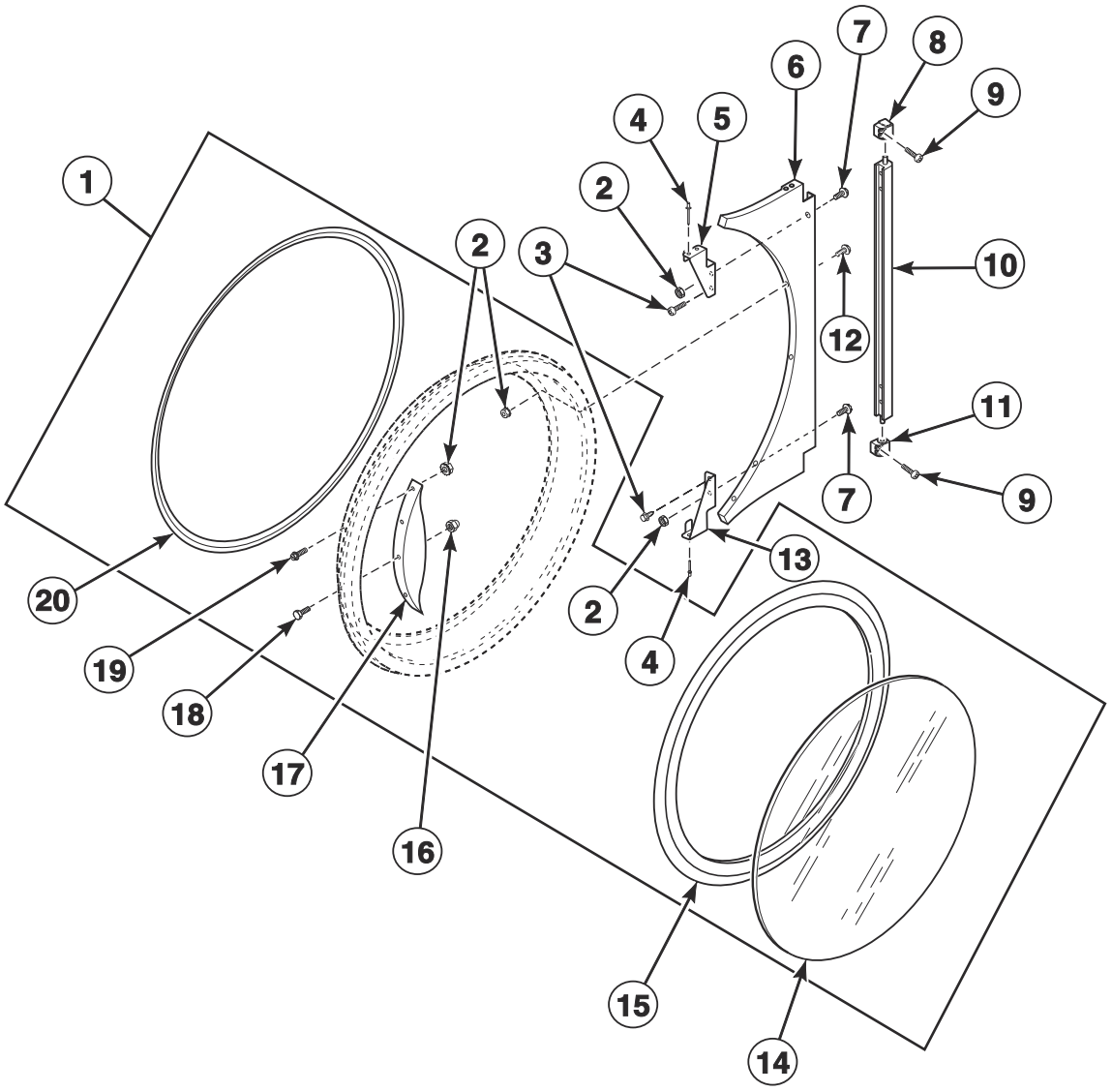

TMB3805P_70621701

© Copyright, Alliance Laundry Systems LLC – DO NOT COPY or TRANSMIT

Door and Hinge Components - Design 5 Models

REF	PART NO.	DESCRIPTION	COMMENTS
	70650401	Door Glass Label	H models
	70707701	Door Glass Label	S models
	70707501	Max Fill Line Label	
1	44354706	Door Assembly	Chrome; H models
	44354702P	Door Assembly	Chrome; S models
	44354709	Door Assembly	Black; B and P models
2	44088001	Nut	
3	802822	Screw	
4	70058501	Pop Rivet	
5	70632001	Upper Hinge Gusset	
6	44366606W	Door Hinge Assembly	White; H and S models
	44366604	Door Hinge Assembly	Stainless steel; H and S models
	44366608	Door Hinge Assembly	Chrome; H and S models
	44366610B	Door Hinge Assembly	Black; B and P models
7	70640201	Screw	
8	70639301	Upper Lug Assembly	Use with 2 of item 9; H and S models
	70639303	Upper Lug Assembly	Use with 2 of item 9; B and P models
9	70640301	Screw	H and S models
	F8458801	Screw	B and P models
10	70640401	Center Hinge Lug Assembly	
11	70639302	Lower Lug Assembly	Use with 2 of item 9; H and S models
	70639304	Lower Lug Assembly	Use with 2 of item 9; B and P models
12	44349101	Screw	
13	70632002	Lower Hinge Gusset	
14	44008401P	Door Glass	
15	70211902P	Door Seal Kit	Use Loctite 414 for seal
16	M414215	Nut	For door strike; Mounts between door strike screw and door handle
17	44007901	Door Handle	
18	M400661	Screw	Door Strike
19	70442101	Screw	4 required
20	70296802	Door Ring Gasket	

© Copyright, Alliance Laundry Systems LLC – DO NOT COPY or TRANSMIT

Cylinder and Trunnion Components

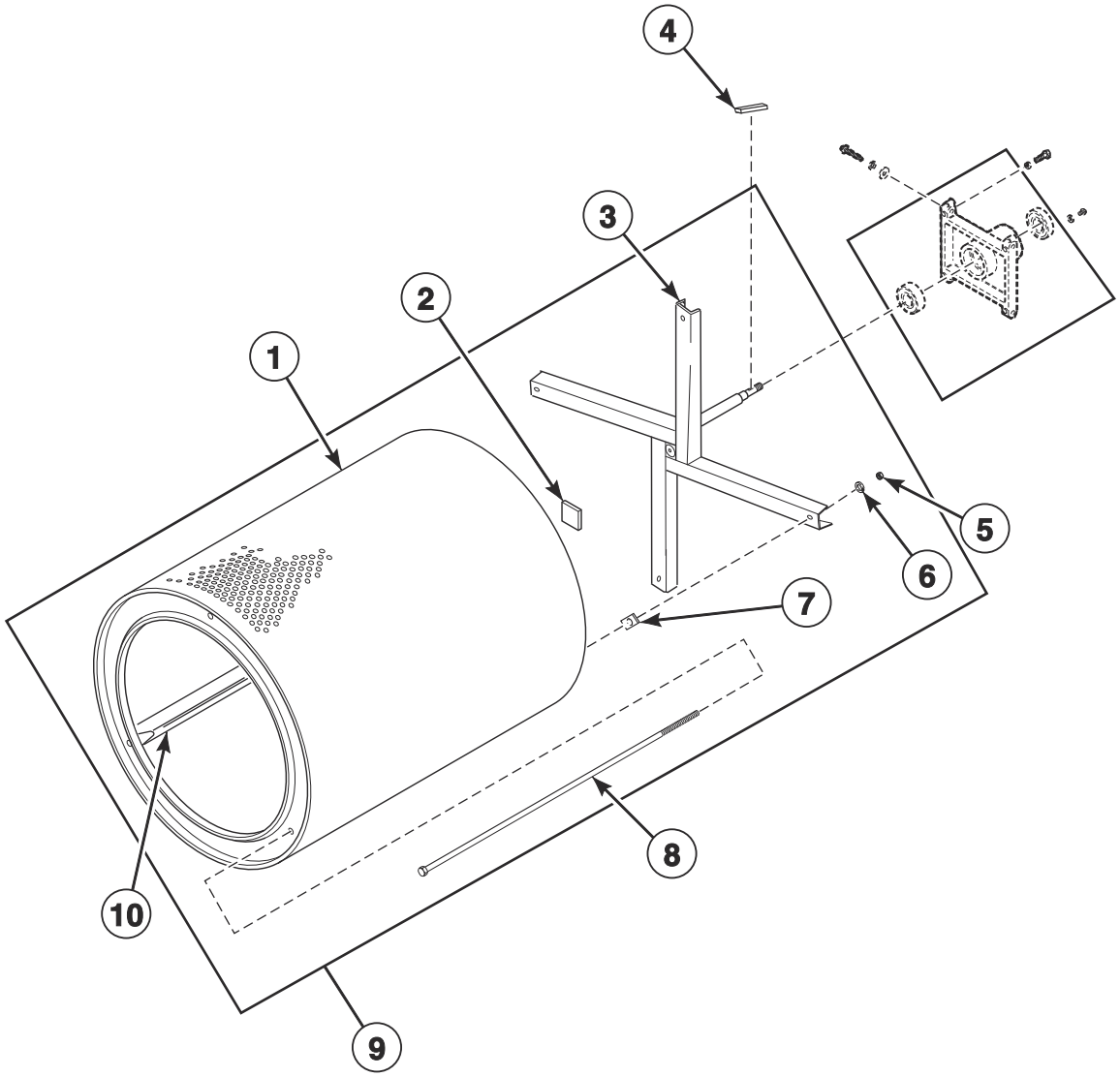

TMB3796P_70621701

© Copyright, Alliance Laundry Systems LLC – DO NOT COPY or TRANSMIT

Cylinder and Trunnion Components

REF	PART NO.	DESCRIPTION	COMMENTS
1	44057001P	Cylinder Kit	Galvanized
	44057101P	Cylinder Kit	Stainless steel
2	M402144	Felt Pad	
3	44208001P	Trunnion Assembly	Spider
4	M400008	Key	Half moon
5	M404993	Nut	
6	M400015	Washer	4 required
7	M401402	Spacer	Adjustment between cylinder and trunnion
8	M401411	Rib Rod	
9	44195601	Cylinder and Trunnion Assembly	Galvanized
	44195602	Cylinder and Trunnion Assembly	Stainless steel
	44195603	Cylinder and Trunnion Assembly	Galvanized with stainless steel back
10	M403002	Cylinder Rib	Galvanized
	44076201	Cylinder Rib	Stainless steel

© Copyright, Alliance Laundry Systems LLC – DO NOT COPY or TRANSMIT

Bearing Components

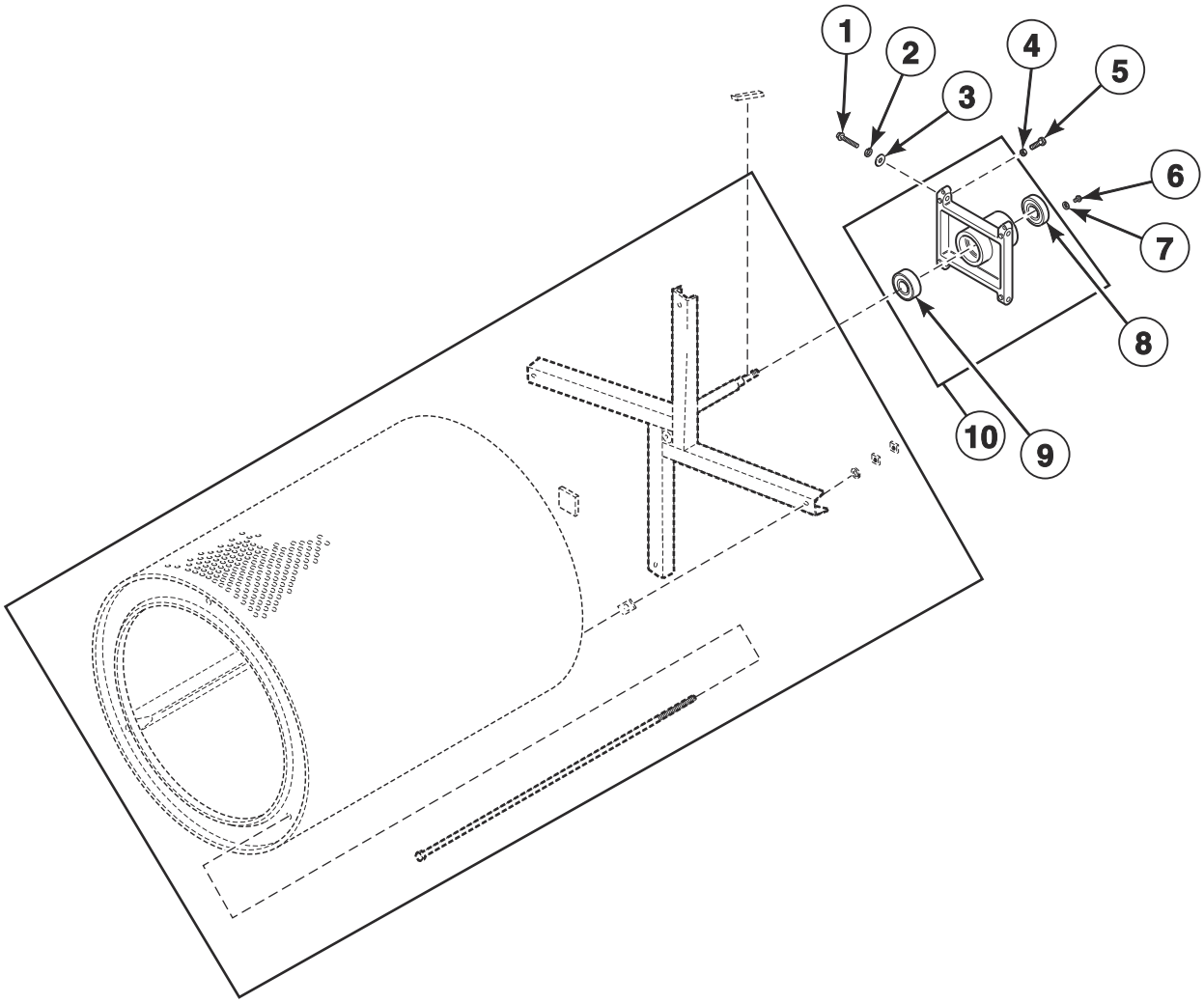

TMB2123PA_70621701

© Copyright, Alliance Laundry Systems LLC – DO NOT COPY or TRANSMIT

Bearing Components

REF	PART NO.	DESCRIPTION	COMMENTS
	M4640P3	Trunnion and Bearing Assembly	
	M4644P3	Housing and Trunnion Assembly	Includes bearing
1	M400063	Screw	
2	M400015	Washer	4 required
3	70261401	Washer	4 required
4	M400026	Nut	4 required
5	M400650	Bolt	2 required
6	70187201	Screw	4 required
7	20103	Washer	4 required
8	M413923P	Bearing	
9	44041901P	Ball Bearing	
10	44375001P	Trunnion Assembly	Includes bearing

© Copyright, Alliance Laundry Systems LLC – DO NOT COPY or TRANSMIT

Drive Motor Components

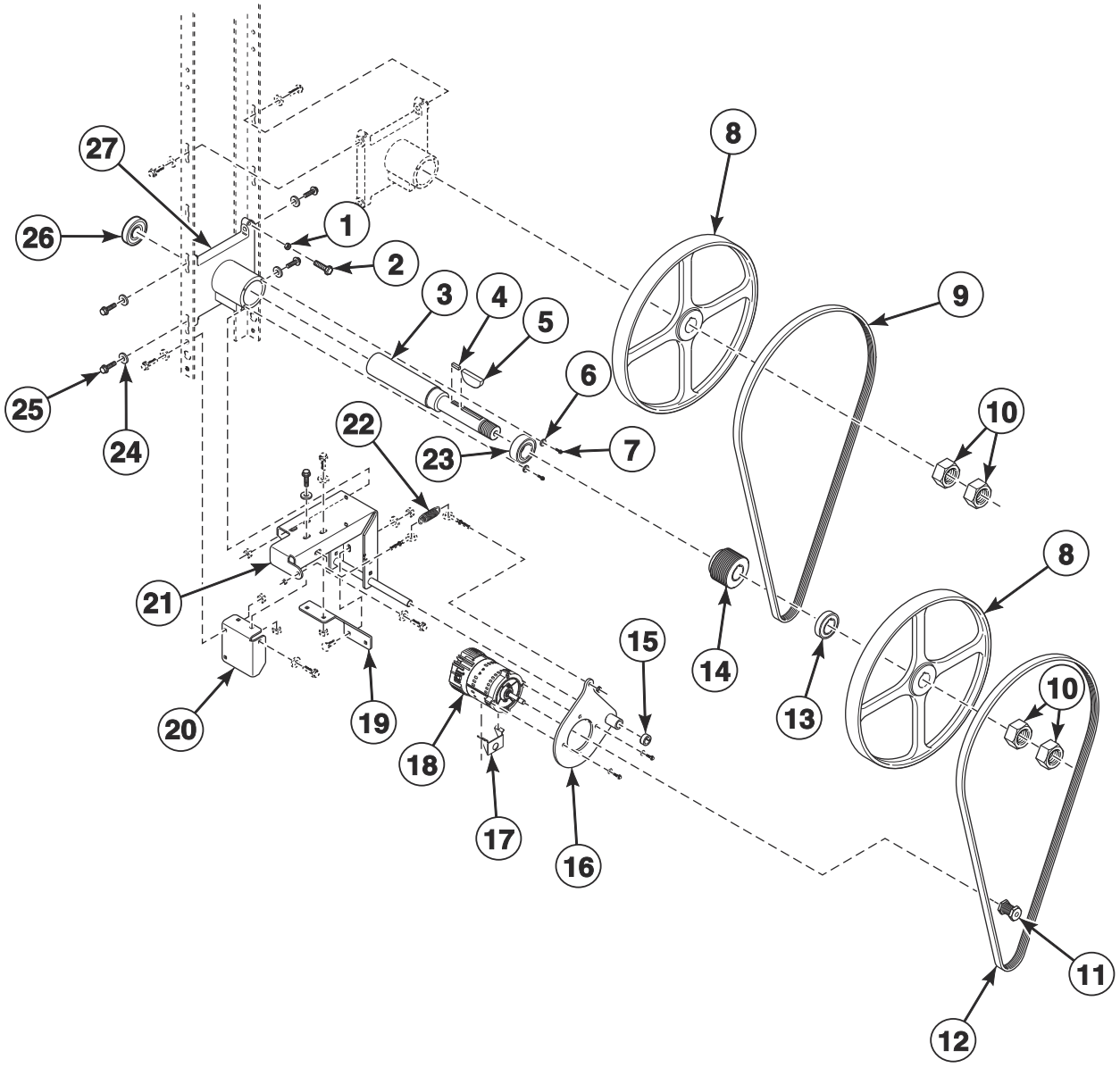

TMB4043P

© Copyright, Alliance Laundry Systems LLC – DO NOT COPY or TRANSMIT

Drive Motor Components

REF	PART NO.	DESCRIPTION	COMMENTS
	44333202	Nut	Use with motor pulley
	44335304	Inverter Motor Harness	Cylinder
	44335305	Inverter Motor Harness	Fan
	44375001P	Trunnion Assembly	Includes items 6, 7, 23, 26 and 27
1	M400026	Nut	
2	M400650	Bolt	
3	44303102	Idler Shaft	
4	44309301	Key	
5	M400008	Key	
6	20103	Washer	
7	70187201	Screw	
8	44289502	Pulley	
9	44333301	V-Belt	Upper
10	M400033	Nut	
11	70559102	Motor Pulley	
12	44309402	V-Belt	Lower
13	44306801	Idler Spacer	
14	44270201	Micro V Pulley	
15	70467001	Shaft Collar	
16	44311501	Motor Pivot Plate Weldment	
17	44317901	Motor Conduit Bracket	
18	44259501P	Drive Motor	.50 HP; 120, 230 Volt/1 Phase
	44259601P	Drive Motor	.50 HP; 380-460 Volt/3 Phase
19	44325701	Motor Pivot Gusset Bracket	
20	44325801	Motor Pivot Support Bracket	
21	44327001	Motor Pivot Bracket Weldment	
22	F8440701	Extension Spring	
23	M413923P	Bearing	
24	70261401	Washer	4 required
25	805213	Screw	4 required
26	44041901P	Ball Bearing	
27	M413826P	Trunnion Housing	

© Copyright, Alliance Laundry Systems LLC – DO NOT COPY or TRANSMIT

Blower and Exhaust Components

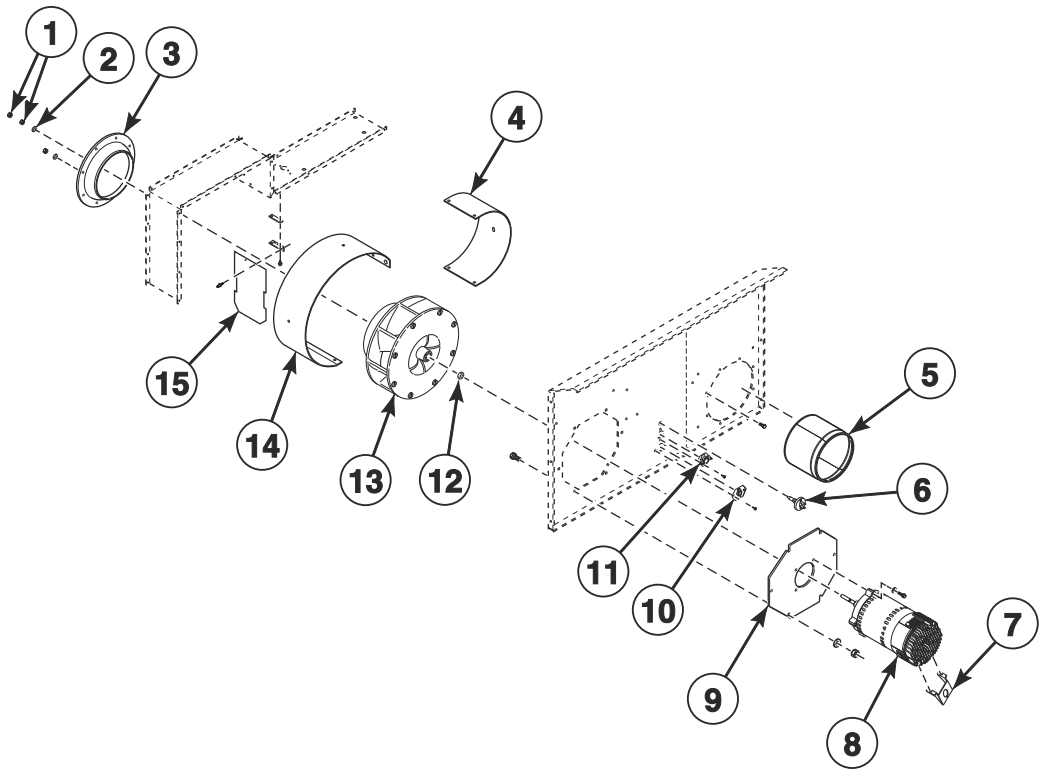

TMB3730P

© Copyright, Alliance Laundry Systems LLC – DO NOT COPY or TRANSMIT

Blower and Exhaust Components

REF	PART NO.	DESCRIPTION	COMMENTS
1	M400022	Nut	
2	F431131	Washer	
3	70303101	Blower Inlet Cone	
4	44308401	Air Exhaust Deflector	
5	44327901	Exhaust Pipe Assembly	
6	M414704	Thermistor	
7	44317901	Motor Conduit Bracket	
8	70478701P	Fan Motor	.50 HP; 120, 230 Volt/1 Phase
	70484901P	Fan Motor	.50 HP; 380-460 Volt/3 Phase
9	70380801	Blower Motor Mounting Plate	
10	70530905	Limit Thermostat	
11	44328010	Limit Thermostat	
12	70599301	Fan Spacer	
13	70302201P	Blower Assembly	
14	44303801	Blower Housing Scroll	
15	44280301	Damper Assembly	

© Copyright, Alliance Laundry Systems LLC – DO NOT COPY or TRANSMIT

Airflow Switch Assembly

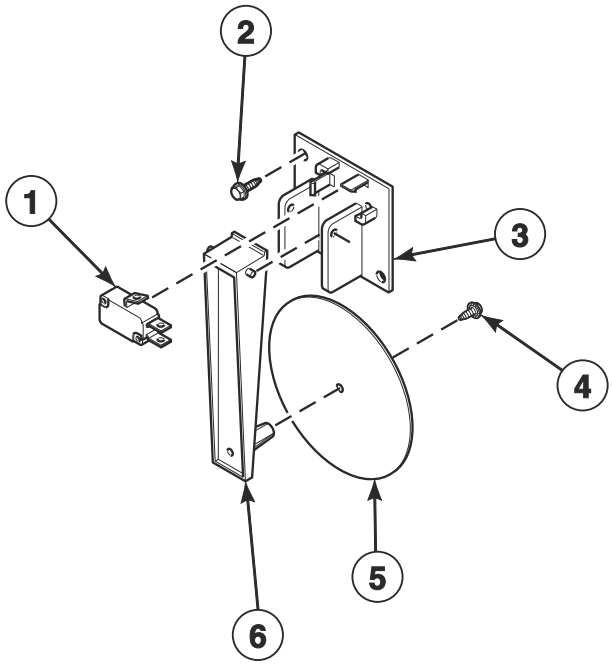

TMB3586P_70621701

© Copyright, Alliance Laundry Systems LLC – DO NOT COPY or TRANSMIT

Airflow Switch Assembly

REF	PART NO.	DESCRIPTION	COMMENTS
	70429602	Airflow Switch Assembly	Includes items 1 and 3-6
1	70411901	Switch	
2	430497	Screw	6 required
3	70319602	Airflow Switch and Arm Bracket	
4	430757	Screw	
5	70319202	Airflow Switch Vane	
6	70319401	Airflow Switch Arm	

© Copyright, Alliance Laundry Systems LLC – DO NOT COPY or TRANSMIT

Gas Heater Components

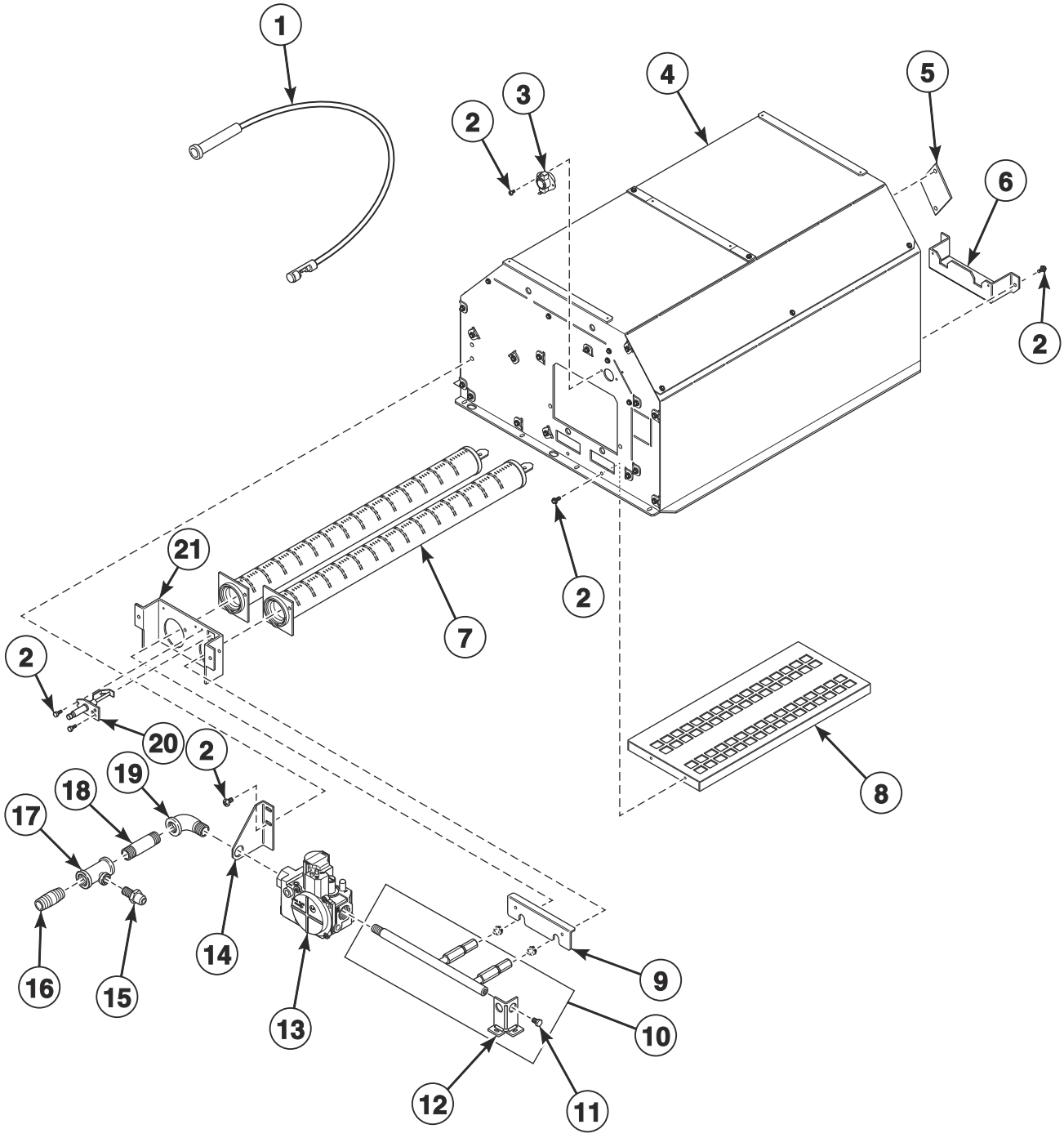

© Copyright, Alliance Laundry Systems LLC – DO NOT COPY or TRANSMIT

Gas Heater Components

REF	PART NO.	DESCRIPTION	COMMENTS
	70539501	Notice Label	Australian models; Natural Gas (N.G.)
	70544901	Notice Label	Australian models; Liquid Petroleum Gas (L.P.)
	D503887	Label	Australian models; Gas
	44178801	Adapter	CE and Australian models; Used to convert from standard to metric thread
	44355201	L.P. Conversion Kit	A, G, and T market models; 0-2000 feet
	44330306	L.P. Conversion Kit	IEC models; 0-2000 feet
	70564304	Stove Limit Harness	
	44273502	Gas Valve Harness	Double; CE models
	44273501	Gas Valve Harness	Single
	44355101P	Direct Air Kit	
	70500401	Heat Exchanger	
1	44239705	High Voltage Suppression Cable	
2	430497	Screw	2 required
3	44328005	Limit Thermostat	
4	44352601	Gas Heater Assembly	
5	70159601	Igniter Cover	Included with item 4
6	44341701	Burner Support	Included with item 4
7	70229801P	Gas Burner	2 required
8	44354301	Burner Grate	Included with item 4
9	44353901	Burner Cover	
10	44340801	Orifice Adapter	
11	70167601	Plug	
12	44342101	Orifice Adapter Support	
13	44154501P	Gas Valve	T and G market models; N.G.
	44154502P	Gas Valve	T and G market models; L.P.
	44298501	Gas Valve	Australian models; N.G.
	44298504	Gas Valve	Australian models; L.P.
	44178301P	Gas Valve	CE models; N.G.
	44178302P	Gas Valve	CE models; L.P.
	44154505	Gas Valve	All other models; N.G.
	44154506	Gas Valve	All other models; L.P.
14	44340701	Gas Valve Bracket	
15	44231601	Pressure Fitting	CE and Australian models
16	70612603	Pipe Nipple	CE and Australian models
17	44231902	Pipe Tee	CE and Australian models
18	70612602	Pipe Nipple	CE and Australian models
	70210201	Pipe Nipple	T market models
	70612601	Pipe Nipple	All other models
19	H86070034	Street Elbow	T market models
	F422304	Street Elbow	All other models
20	70548701P	Spark Electrode	
21	44341801	Burner Support	Included with item 4

© Copyright, Alliance Laundry Systems LLC – DO NOT COPY or TRANSMIT

Burner Orifices

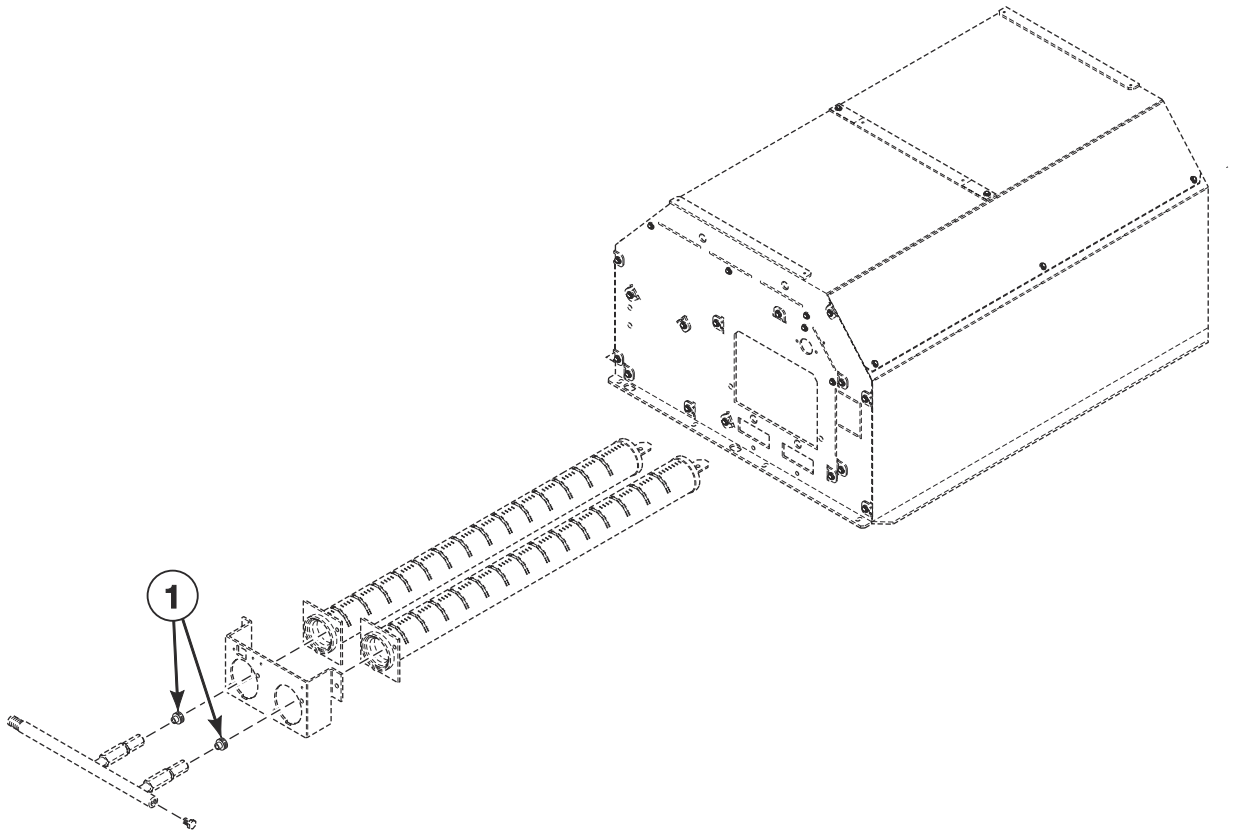

TMB3717P_70621701

© Copyright, Alliance Laundry Systems LLC – DO NOT COPY or TRANSMIT

Burner Orifices

REF	PART NO.	DESCRIPTION	COMMENTS
	44357501	High Altitude Orifice Kit	T and G market Natural gas (N.G.) models
	44357502	High Altitude Orifice Kit	T and G market Liquid Petroleum Gas (L.P) models
1	70684136	Burner Orifice	N.G. models; Drill no. 26 (3.73 mm); 0-2,000 feet
	70684134	Burner Orifice	N.G. models; Drill no. 28 (3.66 mm); 2,001-4,000 feet
	70684132	Burner Orifice	N.G. models; Drill no. 29 (3.57 mm); 4,001-6,000 feet
	70684130	Burner Orifice	N.G. models; 3.3 mm; 6,001-8,000 feet
	70684128	Burner Orifice	N.G. models; Drill no. 1/8 (3.18 mm); 8,001-10,000 feet
	70684113	Burner Orifice	J market models; L.P.; 2.30 mm; 0-2,000 feet
	70684109	Burner Orifice	J market models; L.P.; Drill no. 45 (2.08 mm); 2,001-4,000 feet
	70684107	Burner Orifice	J market models; L.P.; Drill no. 47 (1.99 mm); 4,001-6,000 feet
	70684106	Burner Orifice	J market models; L.P.; Drill no. 48 (1.93 mm); 6,001-8,000 feet
	70684105	Burner Orifice	J market models; L.P.; Drill no. 49 (1.85 mm); 8,001-10,000 feet
	70684113	Burner Orifice	All other models; L.P.; 2.30 mm; 0-2,000 feet
	70684110	Burner Orifice	All other models; L.P.; Drill no. 44 (2.18 mm); 2,001-4,000 feet
	70684109	Burner Orifice	All other models; L.P.; Drill no. 45 (2.08 mm); 4,001-6,000 feet
	70684108	Burner Orifice	All other models; L.P.; Drill no. 46 (2.06 mm); 6,001-8,000 feet
	70684106	Burner Orifice	All other models; L.P.; Drill no. 48 (1.93 mm); 8,001-10,000 feet

© Copyright, Alliance Laundry Systems LLC – DO NOT COPY or TRANSMIT

Electric Heater Components

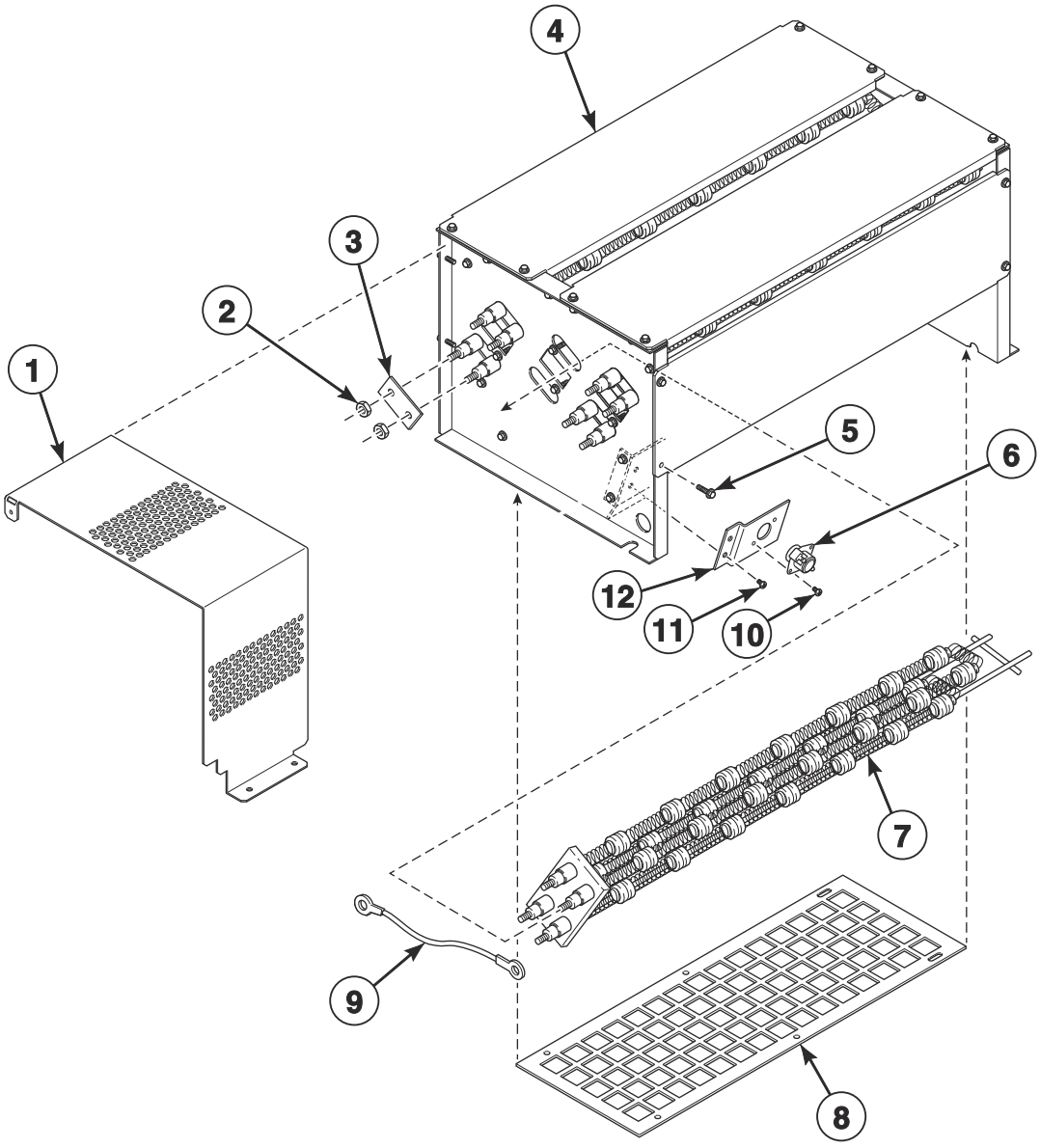

TMB3587P_70621701

© Copyright, Alliance Laundry Systems LLC – DO NOT COPY or TRANSMIT

Electric Heater Components

REF	PART NO.	DESCRIPTION	COMMENTS
	44355101P	Direct Air Kit	
	70500401	Heat Exchanger	
	70564304	Stove Limit Harness	
	44281706	Harness	200-240 Volt; Contactor to element
	44281707	Harness	Contactor element
1	44327302	Electric Wrap	
2	70054	Nut	
3	M400869	Jumper Strip	3 required for high voltage; 6 required for low voltage
4	44252501	Electric Stove Assembly	
5	70240301	Screw	
6	44328006	Limit Thermostat	
7	M410939P	Heater Element	3 required; 10 kW; 240 Volt heater element for 230-240, 400-415 and 480 Volt/3 Phase models
	M410940P	Heater Element	3 required; 10 kW; 208 Volt heater element for 200-208 Volt/3 Phase models
	M410941P	Heater Element	3 required; 10 kW 220 Volt heater element for 380 and 440 Volt/3 Phase models
	M412955P	Heater Element	3 required; 7 kW; 240 Volt heater element for 230-240 Volt/1 Phase models
8	44308801	Heating Element Screen	
9	44281708	Jumper Harness	3 inch
	44281709	Jumper Harness	9 inch
10	33562	Screw	
11	430497	Screw	
12	44226101	Limit Offset Bracket	

© Copyright, Alliance Laundry Systems LLC – DO NOT COPY or TRANSMIT

Control Tray

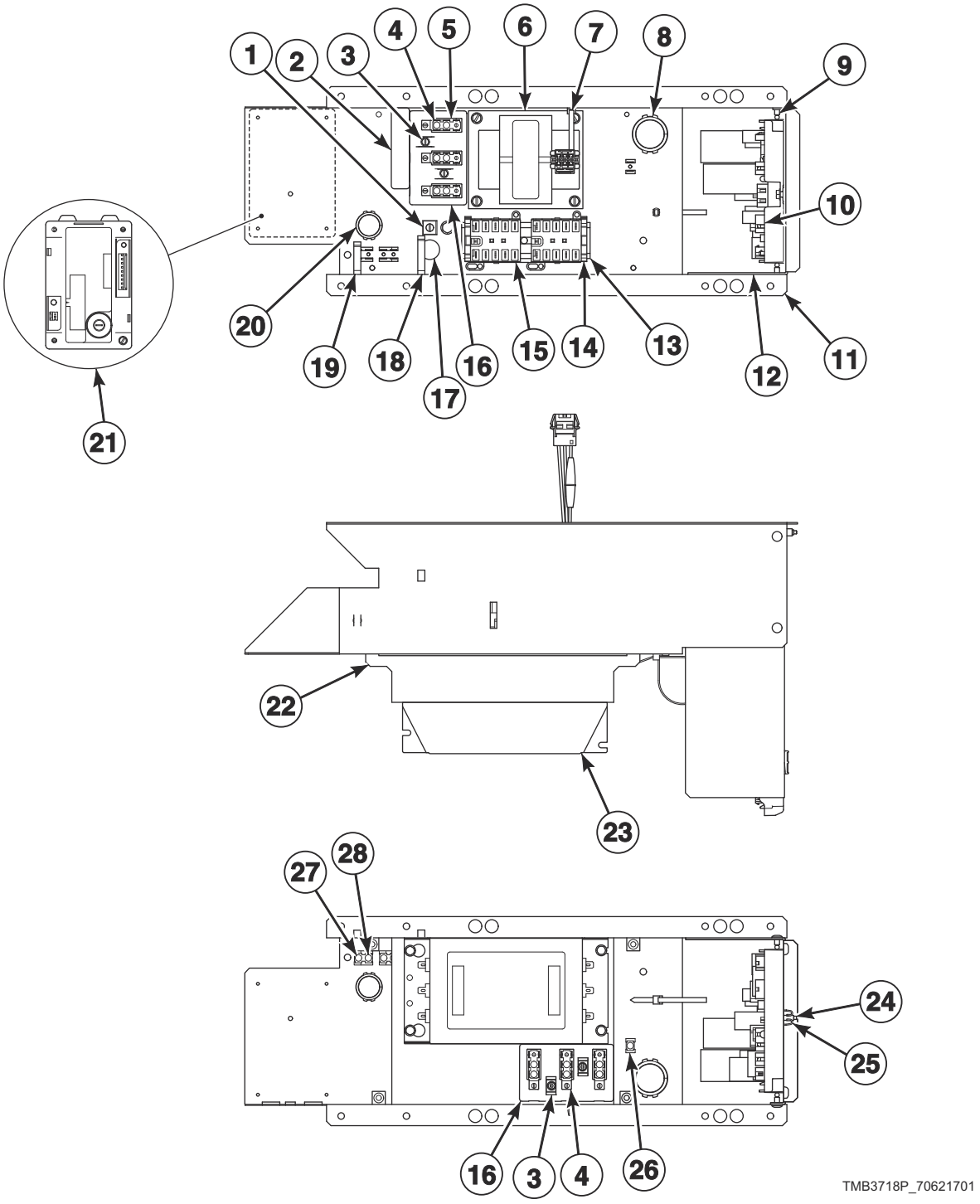

© Copyright, Alliance Laundry Systems LLC – DO NOT COPY or TRANSMIT

Control Tray

REF	PART NO.	DESCRIPTION	COMMENTS
	685837	Screw	Use with item 1
	44088001	Nut	Use with item 1
	70559306	Conversion Kit	X to B voltage
	44357401	EMI Filter Kit	CSA models; 100-240 Volt
	44357402	EMI Filter Kit	CSA models; 380-480 Volt
1	M411283	Ground Lug Connector	
2	44286803	Label	L1, L2, L3
	44286801	Label	L1, N
	44286802	Wire Label	L1 L2, L1 N
	44286804	Wire Label	L1 L2, L1 N, L1 L2 L3
3	51783	Screw	
4	430642	Terminal Block	
5	70333001	Terminal Block Shield	
6	F8491101	Transformer	380-480 Volt
7	70335601	Cable Tie	
8	70346501	Bushing	
9	70058501	Pop Rivet	
10	70671701P	I/O Control Assembly	
11	70492401	Control Tray	
12	70494901	Control Board Control Tray	
13	M412690	DIN Rail	
14	F8449801	End Stop	
15	70482601	Contactor	240 Volt or less: 1 required; 380 Volt or higher: 2 required
16	M413862	Insulator	
17	D516100	Label	
18	F8449501	Wire Clip	
19	F8449502	Wire Clip	
20	70178701	Snap Bushing	
21	70482002P	Ignition Control	IEC gas models
	70482001	Ignition Control	CSA gas models
22	70533101	Filter Bracket	
23	F8591601	EMI Filter	IEC models; 100-200 and 200-240 Volt/1 Phase
	F8637501	EMI Filter	IEC models; 380-480 Volt
24	F8206901	Screw	
25	70030501	Expansion Clip	
26	00621SG	Male Tab Terminal	
27	M400003	Pop Rivet	
28	00622SG	Terminal	

© Copyright, Alliance Laundry Systems LLC – DO NOT COPY or TRANSMIT

Accessory Box - Electric 200-240 Volt Models

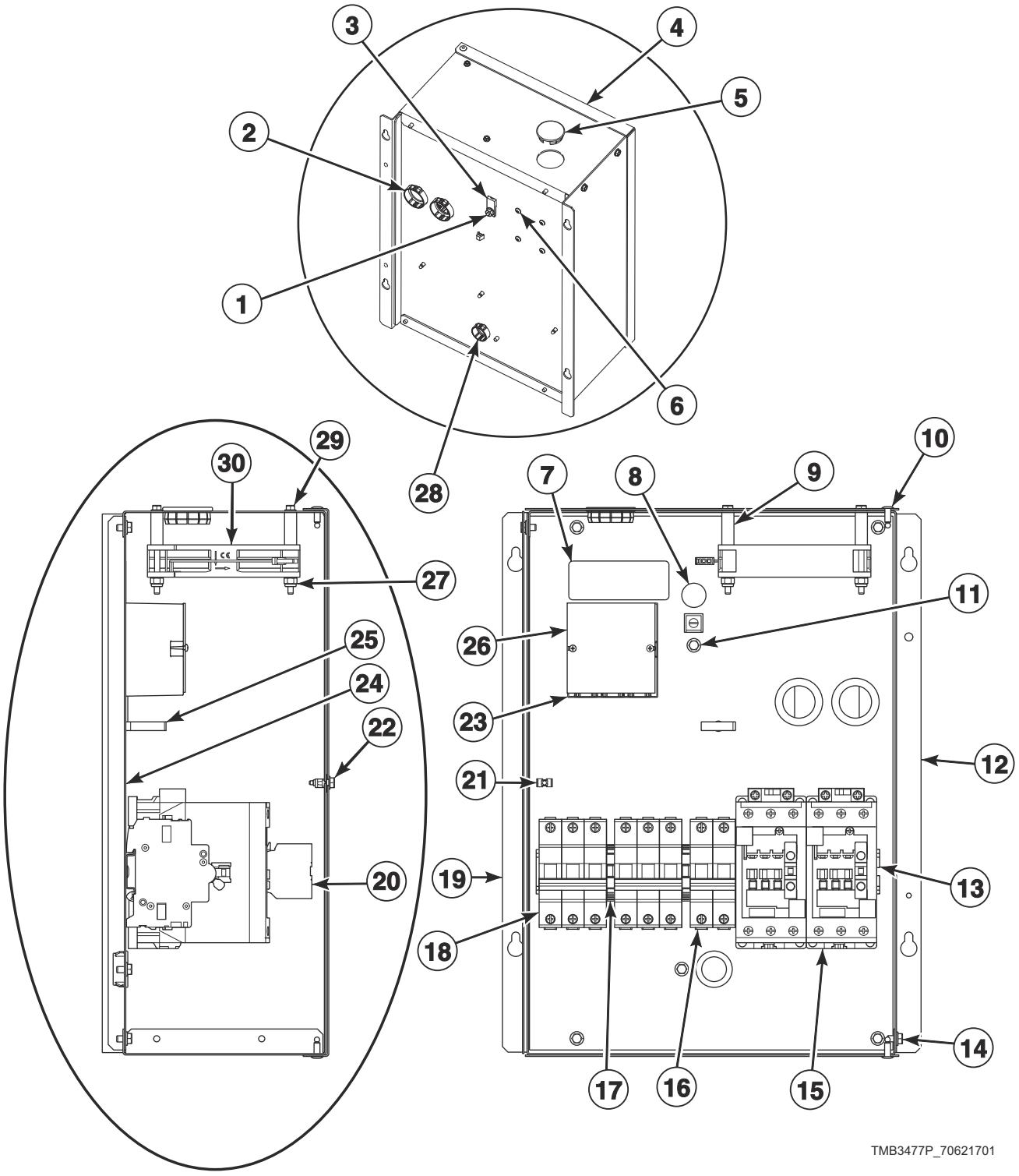

© Copyright, Alliance Laundry Systems LLC – DO NOT COPY or TRANSMIT

Accessory Box - Electric 200-240 Volt Models

REF	PART NO.	DESCRIPTION	COMMENTS
	44309003	Harness	CSA models; Power distribution block to control circuit breaker
	44309013	Harness	IEC models; Power distribution block to control circuit breaker
	44281707	Harness	Contactor to element
	44281706	Harness	Contactor to element
	44281703	Harness	Power distribution block to element circuit breaker
	44281701	Harness	Power distribution block to element circuit breaker
1	44088001	Nut	2 required
2	M402542	Snap Bushing	
3	M411283	Ground Lug Connector	
4	44134004	Contactor Box Cover	
5	70180001	Plug	
6	39733	Screw	
7	44286802	Wire Label	1 Phase; L1, L2 L1, N
	44286803	Label	3 Phase; L1, L2, L3
8	D516100	Label	
9	44328601	Sleeve	2 required
10	70058502	Pop Rivet	
11	685837	Screw	
12	44292501	Contactor Box Side	Top
13	44229701	DIN Rail	
	70058501	Pop Rivet	
14	51780	Screw	
15	70482801	Contactor	2 required
16	70488102	Circuit Breaker	25 amp
17	F8449801	End Stop	2 required
18	70488104	Circuit Breaker	2 required; 50 amp
19	44292401	Contactor Box Side	Bottom
20	44313201	Auxiliary Contact Block	
21	70030501	Expansion Clip	
22	F8206901	Screw	
23	M413865	Power Distribution Block	
24	44292601	Contactor Box Base Plate	
25	F8449502	Wire Clip	
26	44014901P	Power Distribution Block Cover	
27	F430232	Nut	
28	F140938	Snap Bushing	
29	70546902	Screw	
30	F8504301	Fan	

© Copyright, Alliance Laundry Systems LLC – DO NOT COPY or TRANSMIT

Accessory Box - Electric 380-480 Volt Models

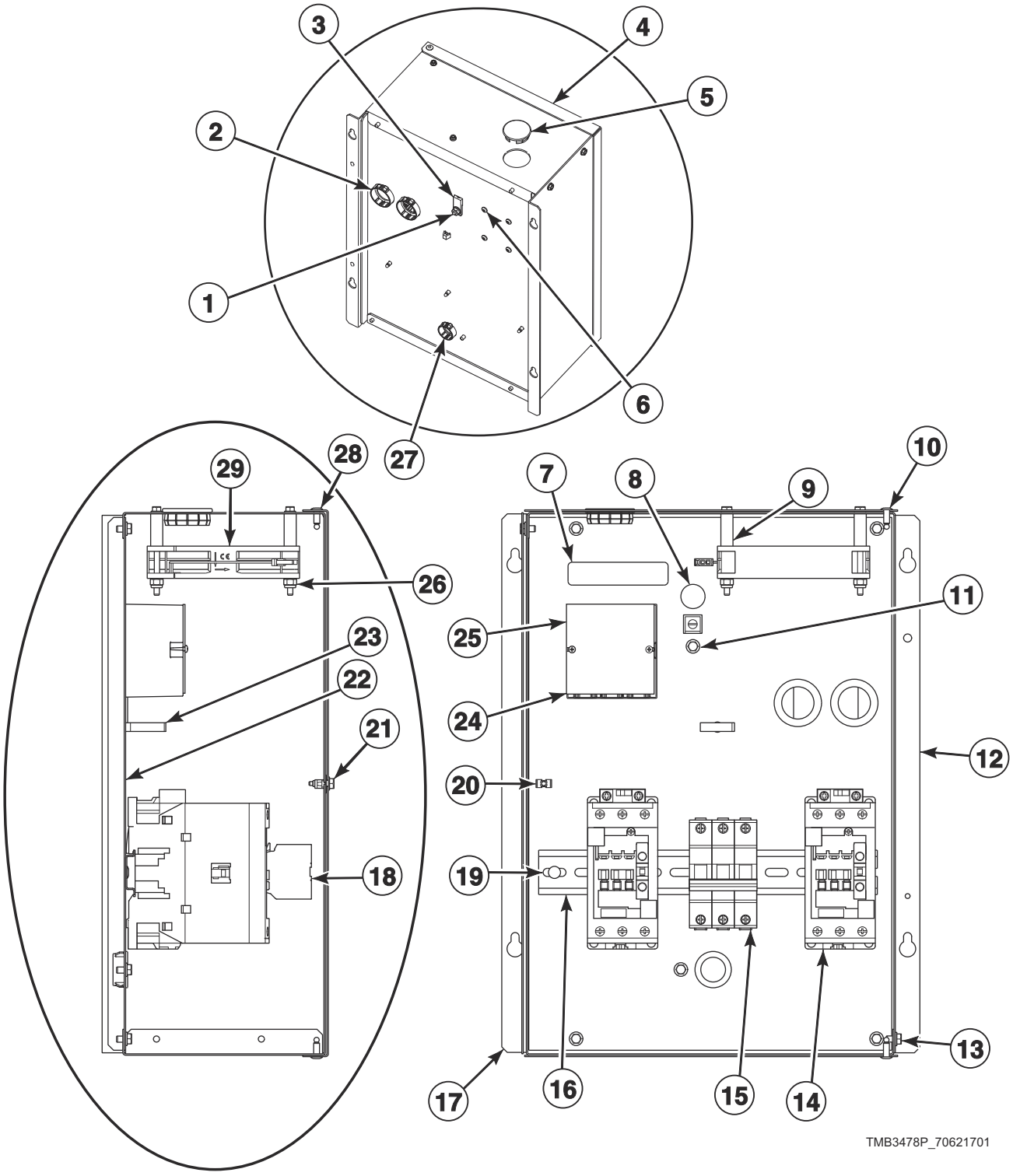

© Copyright, Alliance Laundry Systems LLC – DO NOT COPY or TRANSMIT

Accessory Box - Electric 380-480 Volt Models

REF	PART NO.	DESCRIPTION	COMMENTS
	44309004	Harness	CSA models; Power distribution block to control circuit breaker
	44309014	Harness	IEC models; Power distribution block to control circuit breaker
1	44088001	Nut	
2	M402542	Snap Bushing	2 required
3	M411283	Ground Lug Connector	
4	44134004	Contactor Box Cover	
5	70180001	Plug	
6	39733	Screw	
7	44286803	Label	
8	D516100	Label	
9	44328601	Sleeve	2 required
10	70058502	Pop Rivet	
11	685837	Screw	
12	44292501	Contactor Box Side	Top
13	51780	Screw	
14	70482801	Contactor	2 required
15	70488101	Circuit Breaker	
16	44229701	DIN Rail	
17	44292401	Contactor Box Side	Bottom
18	44313201	Auxiliary Contact Block	2 required
19	70058501	Pop Rivet	
20	70030501	Expansion Clip	
21	F8206901	Screw	
22	44292601	Contactor Box Base Plate	
23	F8449502	Wire Clip	
24	M413865	Power Distribution Block	
25	44014901P	Power Distribution Block Cover	
26	F430232	Nut	
27	F140938	Snap Bushing	
28	70546902	Screw	
29	F8504301	Fan	

© Copyright, Alliance Laundry Systems LLC – DO NOT COPY or TRANSMIT

Harnesses

PART NO.	DESCRIPTION	COMMENTS
44316007	Harness	1 Phase
44316008	Harness	3 Phase
44280007	Configuration Harness	120 Volt; Cylinder
44280006	Configuration Harness	120 Volt; Fan
44334308	Contactor Coil Harness	Electric models
44334303	Control Harness	Electric models; 1 Phase
44334304	Control Harness	Electric models; 3 Phase
44356404	Control Tray Harness Assembly	Electric models
44356403	Control Tray Harness Assembly	Gas models
44334702	Inverter Contactor Coil Harness	Secondary
44281705	Jumper Harness	
44316001	Harness	1 Phase
44316002	Harness	3 Phase
44280010	Motor Contactor Power Harness	1 Phase; EMI
44280012	Motor Contactor Power Harness	3 Phase; EMI
44280001	Motor Contactor Power Harness	1 Phase
44280003	Motor Contactor Power Harness	3 Phase
44280101	Power Harness	
44272101	Power Harness	

© Copyright, Alliance Laundry Systems LLC – DO NOT COPY or TRANSMIT

Labels

PART NO.	DESCRIPTION	COMMENTS
44324201	Caution Label	Australian models; Repeat Ignition Reset
44318601	Caution Label	Vent/install
F8614501	Danger Label	Shock; English/French
F8614301	Hot Surface Warning Label	English/French
F8609001	Hot Surface Warning Label	Icon
F8611601	Warning Label	
44318600	Label Kit	Vent/install
F8614500	Label Kit	Shock
F8611600	Warning Label Kit	
44321501	Notice Label	120/240 Volt
70539601	Notice Label	
70534201	Notice Label	
F8609501	Notice Label	
D516073	Notice Label	Read instructions; Icon
70538401	Pinch Warning Label	English/French
F8615701	Pinch Warning Label	Icon
70536401	Warning Label	Lint; Australian models
44324101	Warning Label	Fire; Australian models
44321601	Warning Label	Risk of fire; Icon
44324001	Warning Label	Shock/pinch

© Copyright, Alliance Laundry Systems LLC – DO NOT COPY or TRANSMIT

Notes

© Copyright, Alliance Laundry Systems LLC – DO NOT COPY or TRANSMIT

Parts Index

A

Accessory Plate
F8574106 9

Accessory Plate Assembly
F8574202 9
F8574203 9
F8574205 9
F8734601 9

Adapter
44178801 43

Air Exhaust Deflector
44308401 39

Airflow Switch and Arm Bracket
70319602 41

Airflow Switch Arm
70319401 41

Airflow Switch Assembly
70429602 41

Airflow Switch Vane
70319202 41

App Pay Overlay Kit
44374701 ..... 9, 11

Auxiliary Contact Block
44313201 ..... 51, 53

B

Baffle
44304602 25
44304702 25

Ball Bearing
44041901P 35, 37

Bearing
M413923P 35, 37

Belt Guard
44298401 27
44314301 27
44332201 27

Belt Guard Side Panel
44298301 27
44301101 27

Blower Assembly
70302201P 39

Blower Housing Scroll
44303801 39

Blower Inlet Cone
70303101 39

Blower Motor Mounting Plate
70380801 39

Bolt
M400650 ..... 35, 37

Bottom Pan
44304301 25

Burner Cover
44353901 43

Burner Grate
44354301 43

Burner Orifice
70684105 45
70684106 45
70684107 45
70684108 45
70684109 45
70684110 45
70684113 45
70684128 45
70684130 45
70684132 45
70684134 45
70684136 45

Burner Support
44341701 43
44341801 43

Bushing
D503235 7
70346501 49

Bypass Harness
44334103 19

C

Cable Tie
70335601 49

Card Reader Plate
F8574204 9

Caution Label
44318601 55
44324201 55

Center Hinge Lug Assembly
70640401 31

Center Pan
44304201 25

Central Pay Board Harness
44355604 17

Central Pay Harness
44355602 17
44355606 17

Central Pay Kit
44359001 17
44359003 17

Circuit Breaker
70488101 53
70488102 51
70488105 51

Coin Box
F160673P 25

Coin Chute Assembly
70296401 25

Coin Drop
38963P 13
70441601 13
70441603 13

Coin Drop Assembly
201141 13
210195 13
210196 13
38462P 13
38463 13

N/A items do not appear in index.

© Copyright, Alliance Laundry Systems LLC – DO NOT COPY or TRANSMIT

38467 13
38519 13
70281102 13
70283102 13
70441602 13
70471601 13
70482401 13
70506901 13
Coin Drop Kit
CK077 13
CK097 13
CK111 13
CK122 15
Coin Identification Paper
38464P 13
38475 13
Coin Meter
F0160737-00 13
Coin Vault Assembly
70529501 25
Coin Vault Switch Harness
44334101 19
Configuration Harness
44280006 54
44280007 54
Contactor
70482601 49
70482801 ..... 51, 53
Contactor Box Base Plate
44292601 ..... 51, 53
Contactor Box Cover
44134004 ..... 51, 53
Contactor Box Side
44292401 ..... 51, 53
44292501 ..... 51, 53
Contactor Coil Harness
44334308 54
Control Assembly
70697001P 9
70697003 11
Control Board Control Tray
70494901 49
Control Box Wrap
44119101 7
44344101 7
Control Door Latch
431318 25
Control Harness
44334303 54
44334304 54
Control Mounting Bracket
44346101 9
Control Panel
44344001 19
44344002 19
Control Screen Replacement Kit
F8647701P 9, 11
Control Tray
70492401 49
Control Tray Harness Assembly
44356403 54
44356404 54
Conversion Kit
70559306 49
Cylinder and Trunnion Assembly
44195601 33
44195602 33
44195603 33
Cylinder Kit
44057001P 33
44057101P 33
Cylinder Rib
M403002 33
44076201 33

D

Damper Assembly
44280301 39
Danger Label
F8614501 55
Decal
F8687701 19
DIN Rail
M412690 49
44229701 ..... 51, 53
Direct Air Kit
44355101P 43, 47
Door Assembly
44354702P 29, 31
44354706 31
44354709 31
Door Catch Kit
70482901 19
Door Glass
44008401P 29, 31
Door Glass Installation Tool
M4221P4 29
Door Glass Label
70650401 ..... 29, 31
70707701 ..... 29, 31
Door Handle
44007901 ..... 29, 31
Door Hinge Assembly
44366604 31
44366608 31
44366610B 31
70596603 29
Door Hinge Lug Assembly
70601005 29
Door HingecAssembly
44366606W 31
Door Latch
M401223 19
Door Ring Gasket
70296802 ..... 29, 31
Door Seal Kit
70211902P 29, 31
Door Switch Actuator
70727901 29
Drive Motor
44259501P 37
44259601P 37

N/A items do not appear in index.

© Copyright, Alliance Laundry Systems LLC – DO NOT COPY or TRANSMIT

E

Electric Stove Assembly
44252501 47

Electric Wrap
44327302 47

Electronic Coin Drop Assembly
70294107 13
70513303 13
70513304 13
70513306 13
70513309 13
70513310 13
70513311 13
70513312 13
70513313 13
70513314 13
70513315 13
70513316 13
70513318 13

Electronic Coin Drop Kit
CK099 15
CK100 15
CK101 15
CK109 15
CK110 15
CK113 15
CK115 15
CK116 15
CK117 15
CK118 15
CK119 15
CK120 15
CK121 15
CK125 15

EMI Filter
F8591601 49
F8637501 49

EMI Filter Kit
44357401 49
44357402 49

End Stop
F8449801 ..... 49, 51

Exhaust Pipe Assembly
44327901 39

Expansion Clip
70030501 ..... 9, 11, 17, 19, 49, 51, 53

Extension Spring
F8440701 37

F

Fan
F8504301 ..... 51, 53

Fan Motor
70478701P 39
70484901P 39

Fan Spacer
70599301 39

Felt Pad
M402144 33

Filter Bracket
70533101 49

Fob Communication Harness
F8719302 9

Fob Reader Control Assembly
205135 9

Front Panel
44346301 19
44346302 19
44367301 19
44367302 19
44367401W 19
44367405W 19

G

Gas Burner
70229801P 43

Gas Heater Assembly
44352601 43

Gas Valve
44154501P 43
44154502P 43
44154505 43
44154506 43
44178301P 43
44178302P 43
44298501 43
44298504 43

Gas Valve Bracket
44340701 43

Gas Valve Harness
44273501 43
44273502 43

Gasket
70289101P 21

Ground Lug Connector
M411283 ..... 49, 51, 53

Guard Panel
44269201 27
44332301 27

H

Handle and Caps Assembly
70154405P 21

Harness
44281701 51
44281703 51
44281706 ..... 47, 51
44281707 51
44309003 51
44309004 53
44309013 51
44309014 53
44316002 54
44316007 54
44316008 54

Harness Mounting Plate
70307007 ..... 7, 17

Heat Exchanger
70500401 ..... 43, 47

Heater Element
M410939P 47
M410940P 47

N/A items do not appear in index.

© Copyright, Alliance Laundry Systems LLC – DO NOT COPY or TRANSMIT

M410941P 47
M412955P 47
Heating Element Screen
44308801 47
High Altitude Orifice Kit
44357501 45
44357502 45
High Voltage Suppression Cable
44239705 43
Hinge Cam Kit
70622401 29
Hold-Down Clip
35865 23
Hot Surface Warning Label
F8609001 55
F8614301 55
Housing and Trunnion Assembly
M4644P3 35

I

Idler Shaft
44303102 37
Idler Spacer
44306801 37
Igniter Cover
70159601 43
Ignition Control
70482001 49
70482002P 49
Insulator
M413862 49
Inverter Contactor Coil Harness
44334702 54
Inverter Motor Harness
44335304 37
44335305 37
I/O Control Assembly
70671701P 49

J

Jumper Harness
44281705 54
44281708 47
44281709 47
Jumper Strip
M400869 47

K

Key
M400008 ..... 33, 37
44309301 37
70155601 19
70155602 19

L

Label
D503887 43
D516100 ..... 49, 51, 53
44286801 49
44286803 ..... 49, 51, 53
Label Kit
F8614500 55
44318600 55
70534400 19
Leveling Leg Locknut Wrench
205655 25
Limit Offset Bracket
44226101 47
Limit Thermostat
44328005 43
44328006 47
44328010 39
70530905 39
Lint Bracket
44325301 23
Lint Clip Bracket
44140202 23
Lint Panel
44293604W 21
44293605 21
44298102 23
44300901 23
Lint Screen
44063601 23
Lint Screen Clip
H96418413 23
Lint Screen Top Rail
44298901 23
Lock Catch Bracket
70654501 25
Lock, Key and Nut Kit
70722301 19
70733701 19
Lower Hinge Gusset
70632002 31
Lower Lug Assembly
70639302 31
70639304 31
Lower Rear Panel
44300001 25
Lug Mount Bracket
70604701 25
70634301 25
L.P. Conversion Kit
44330306 43
44355201 43

M

Machine ID Control Assembly
203361P 9, 11
Magnet
70343101 21
Magnet Bracket
44290501 21

N/A items do not appear in index.

© Copyright, Alliance Laundry Systems LLC – DO NOT COPY or TRANSMIT

Main Harness
44316001 54
44334203 7
Male Tab Terminal
00621SG 49
Max Fill Line Label
70707501 ..... 29, 31
Micro V Pulley
44270201 37
Motor Conduit Bracket
44317901 ..... 37, 39
Motor Contactor Power Harness
44280001 54
44280003 54
44280010 54
44280012 54
Motor Pivot Bracket Weldment
44327001 37
Motor Pivot Gusset Bracket
44325701 37
Motor Pivot Plate Weldment
44311501 37
Motor Pivot Support Bracket
44325801 37
Motor Pulley
70559102 37

N

Nameplate
F8664901 19
F8688901 19
567293 19
567887 19
Notice Label
D516073 55
F8609501 55
44321501 55
70534201 55
70539501 43
70539601 55
Notice label
70544901 43
Nut
F430232 ..... 51, 53
M400022 39
M400026 ..... 35, 37
M400033 37
M404993 33
M414215 ..... 29, 31
21899 25
23951 21
44071201 9
44087101 ..... 9, 11
44088001 ..... 29, 31, 49, 51, 53
44333202 37
51236 21
70054 ..... 9, 47

O

Opto Coupler
200674P 13
Orifice Adapter
44340801 43
Orifice Adapter Support
44342101 43
Overlay
F8734001 9
F8734301 9
F8736601 9

P

Panel Locator
56079 ..... 19, 21
Panel Lock
44089304 19
44089305 19
Pin
70071401 29
Pinch Warning Label
F8615701 55
70538401 55
Pipe Bracket
44327603 27
Pipe Nipple
70210201 43
70612601 43
70612602 43
70612603 43
Pipe Tee
44231902 43
Plug
70167601 43
70180001 ..... 51, 53
Pop Rivet
M400003 ..... 25, 49
44166601 19
70058501 ..... 21, 25, 29, 31, 49, 51, 53
70058502 ..... 51, 53
Porcelain Touch-Up Paint
122P4P 25
Power Distribution Block
M413865 ..... 51, 53
Power Distribution Block Cover
44014901P 51, 53
Power Harness
44272101 54
44280101 54
Pressure Fitting
44231601 43
Pulley
44289502 37
Pushbutton Switch
70413301 ..... 9, 11, 19

R

Reed Switch Assembly
F8066804 21
Rib Rod
M401411 33
Rivet
70743501 21

N/A items do not appear in index.

© Copyright, Alliance Laundry Systems LLC – DO NOT COPY or TRANSMIT

Roller Bracket Assembly
70404001 21
Roller Catch Arm
70030301 21
Roller Catch Spacer
70030201 21
Roller Catch Wheel
70297601 21

S

Screw
FR004022 29
F8206901 ..... 17, 49, 51, 53
F8458801 31
M400063 35
M400661 ..... 29, 31
M411072 19
33562 47
39733 ..... 9, 11, 21, 51, 53
430497 ..... 7, 25, 41, 43, 47
430757 ..... 21, 41
44349101 ..... 29, 31
51780 ..... 17, 25, 51, 53
51783 49
685837 ..... 49, 51, 53
70033502 19
70072801 21
70132301 21
70182601 19
70187201 ..... 35, 37
70240301 47
70247701 25
70275801 19
70436301 29
70442101 ..... 29, 31
70546902 ..... 51, 53
70576101 29
70640201 31
70640301 31
802822 31
805213 37
Shaft Collar
70467001 37
Side Panel
44348501W 25
44367501DG 25
44367502W 25
44367601DG 25
44367601W 25
Sleeve
44328601 ..... 51, 53
Snap Bushing
F140938 ..... 51, 53
M402542 ..... 51, 53
70178701 49
Spacer
M401402 33
Spark Electrode
70548701P 43
Spray Paint
298P4P 25
Stove Grate
44300301 27
44335601 27
Stove Limit Harness
70564304 ..... 43, 47
Street Elbow
F422304 43
H86070034 43
Switch
70411901 41
Switch Bracket
44296101 21
Switch Hole Plug
44057801B 19

T

Terminal
00622SG 49
Terminal Block
430642 49
Terminal Block Shield
70333001 49
Thermistor
M414704 39
44064701 25
Thermistor Plate
44068101 25
44068102 25
Top Pan
44304101 25
44345101 25
44352401 25
Top Panel
44346201 25
44346202 25
Transformer
F8491101 49
202757P 17
202758P 17
Transformer Harness
44272301 17
44272302 17
Trunnion and Bearing Assembly
M4640P3 35
Trunnion Assembly
44208001P 33
44375001P 35, 37
Trunnion Housing
M413826P 37
Tumbler Dolly Kit
M4379P4 19

U

Upper Hinge Gusset
70632001 31
Upper Lug Assembly
70639301 31
70639303 31
Upper Rear Panel
44297001 25
USB IR Interface Kit
203346 17

N/A items do not appear in index.

© Copyright, Alliance Laundry Systems LLC – DO NOT COPY or TRANSMIT

USB-Serial Interface Assembly
203440 ..... 9, 11

V

V-Belt
44309402 37
44333301 37
Vend Activation Harness
44334002 ..... 9, 11
Vend Plate
F8632501 9

W

Warning Label
F8611601 55
44321601 55
44324001 55
44324101 55
70534401 19
70534402 19
70534405 19
70536401 55
Warning Label Kit
F8611600 55
Washer
F431131 39
M400015 ..... 33, 35
20103 ..... 35, 37
70261401 ..... 35, 37
Wire Clip
F8449501 49
F8449502 ..... 49, 51, 53
Wire Guard
201595P 13
Wire Label
44286802 ..... 49, 51
44286804 49
Wireless Control Label
204692 11

N/A items do not appear in index.

© Copyright, Alliance Laundry Systems LLC – DO NOT COPY or TRANSMIT

Notes

© Copyright, Alliance Laundry Systems LLC – DO NOT COPY or TRANSMIT