Tumble Dryers

50 Pound Capacity

18 Digit Model Numbers with 6 in 13th Position

Refer to Page 5 for Model Numbers

Parts

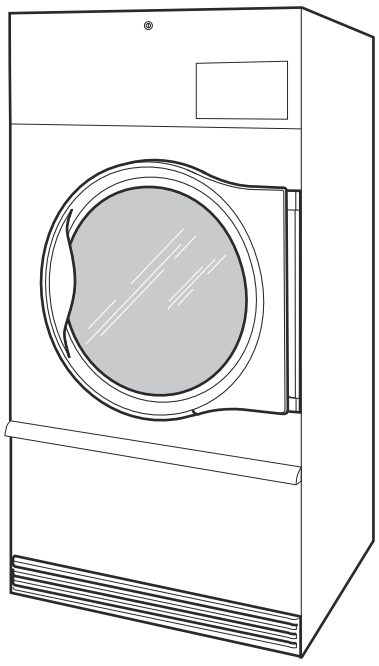

TMB1290C

Alliance™ Laundry Systems

www.alliancelaundry.com

Part No. 70698501R6
October 2025

Table of Contents

Title	Page
Parts Ordering Information	3
Serial Plate Location	3
Machine Identification	5
Product Overview - Heat Source and Voltage	6
Product Overview - FN Control Suffix	8
Product Overview - DN and NN Control Suffixes	10
Product Overview - N and W Control Suffixes	12
Product Overview - V Control Suffix	14
Control Box	16
Fire Suppression System Control Box	18
Dual Digital Control	20
Electronic Display Control - Vend Models with N or W in the 7th Position	22
Electronic Display Control Overlays- Vend Models with N or W in the 7th Position	24
Electronic Display Control - OPL Models with N in the 7th Position	26
3.5 Inch Graphical Control	28
Touch Control - Vend Models with V in the 7th Position	30
Touch Control - OPL Models with V in the 7th Position	32
Coin Drops	34
Coin Drop Kits	36
Network Board Components	38
Emergency Stop Button - IEC OPL Models	40
Cabinet Front Components	42
Control Panels and Nameplates	44
Front Panel Assemblies	46
Lower Cabinet Front Components	48
Lint Panel Components	50
Cabinet Components	52
Rear Panel and Belt Guard Components	54
Door Assemblies	56
Door Components	58
Hinge Components	60
Cylinder and Trunnion Components	62
Bearing Components	64
Moisture Sensing Components	66
Drive Motor Components	68
Blower and Exhaust Components	70
Inverter Tray Components	72
Airflow Switch Assembly	74
Gas Heater Components - Models with D, F, N and W in the 7th Position	76
Gas Heater Components - Models with V in the 7th Position	78
Burner Orifices	80

© Copyright 2025, Alliance Laundry Systems LLC

All rights reserved. No part of the contents of this book may be reproduced or transmitted in any form or by any means without the expressed written consent of the publisher.

Electric Heater Components 82
Steam Heater and Valve 84
Control Tray 86
Accessory Box - Electric 200-240 Volt Models 88
Accessory Box - Electric 380-480 Volt Models 90
Labels 92
Parts Index 93

© Copyright, Alliance Laundry Systems LLC – DO NOT COPY or TRANSMIT

Parts Ordering Information

If literature or replacement parts are required, contact the source from whom the machine was purchased or contact Alliance Laundry Systems at (920) 748-3950 for the name and address of the nearest authorized parts distributor.

For technical assistance, call the number listed below:

(920) 748-3121 Ripon, Wisconsin

Serial Plate Location

When calling or writing about your product, be sure to mention model and serial numbers. Model and serial numbers are located on serial plate(s) as shown.

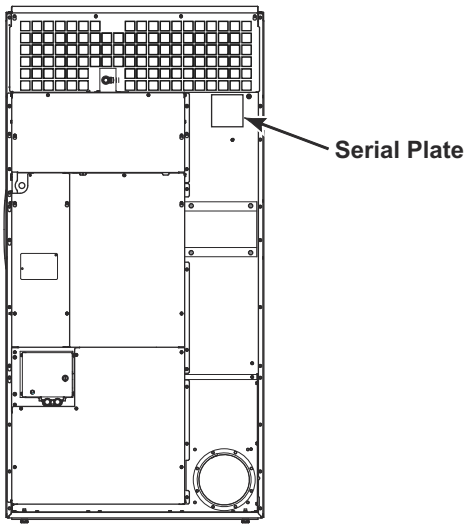

TMB3888P

© Copyright, Alliance Laundry Systems LLC – DO NOT COPY or TRANSMIT

Notes

© Copyright, Alliance Laundry Systems LLC – DO NOT COPY or TRANSMIT

Machine Identification

Information in this manual is applicable to these machines:

BA050E
BA050L
BA050N
BA050S
BG050D
BG050E
BG050L
BG050N
BG050S
BH050E
BH050L
BH050N
BH050S
BJ050D
BJ050E
BJ050L
BJ050N
BJ050S
BK050E
BK050L
BK050N
BL050E
BL050L
BR050E
BR050S
BU050E
BU050L
BU050N
BU050S
GA050E
GA050L
GA050N
GA050S
GG050E
GG050L
GG050N
GG050S
GH050E
GH050L
GH050N
GH050S
GJ050E
GJ050L
GJ050N
GJ050S
GK050E
GK050L
GK050N
GT050E
GT050L
GT050N
GT050S
GU050E
GU050L
GU050N
GU050S
HA050E
HA050L
HA050N
HA050S
HG050D
HG050E
HG050L
HG050N
HG050S
HH050E
HH050L
HH050N
HH050S
HJ050D
HJ050E
HJ050L
HJ050N
HJ050S
HK050E
HK050L
HK050N
HL050E
HL050L
HR050E
HR050S
HT050C
HT050E
HT050L
HT050N
HT050S
HU050E
HU050L
HU050N
HU050S
KT050E
KT050L
KT050N
KT050S
MG050D
MG050E
MG050L
MG050N
MG050S
MJ050D
MJ050E
MJ050L
MJ050N
MJ050S
NA050E
NA050L
NA050N
NA050S
NG050E
NG050L
NG050N
NG050S
NH050E
NH050L
NH050N
NH050S
NJ050E
NJ050L
NJ050N
NJ050S
NK050E
NK050L
NK050N
NR050E
NR050S
NT050E
NT050L
NT050N
NT050S
NU050E
NU050L
NU050N
NU050S
PA050E
PA050L
PA050N
PA050S
PG050E
PG050L
PG050N
PG050S
PH050E
PH050L
PH050N
PH050S
PJ050E
PJ050L
PJ050N
PJ050S
PK050E
PK050L
PK050N
PR050E
PR050S
PT050C
PT050E
PT050L
PT050N
PT050S
PU050E
PU050L
PU050N
PU050S
SA050E
SA050L
SA050N
SA050S
SG050D
SG050E
SG050L
SG050N
SG050S
SH050E
SH050L
SH050N
SH050S
SJ050D
SJ050E
SJ050L
SJ050N
SJ050S
SK050E
SK050L
SK050N
SL050E
SL050L
SR050E
SR050S
ST050C
ST050E
ST050L
ST050N
ST050S
SU050E
SU050L
SU050N
SU050S
UA050E
UA050L
UA050N
UA050S
UG050D
UG050E
UG050L
UG050N
UG050S
UH050E
UH050L
UH050N
UH050S
UJ050D
UJ050E
UJ050L
UJ050N
UJ050S
UK050E
UK050L
UK050N
UL050E
UL050L
UR050E
UR050S
UT050C
UT050E
UT050L
UT050N
UT050S
UU050E
UU050L
UU050N
UU050S

© Copyright, Alliance Laundry Systems LLC – DO NOT COPY or TRANSMIT

Product Overview - Heat Source and Voltage

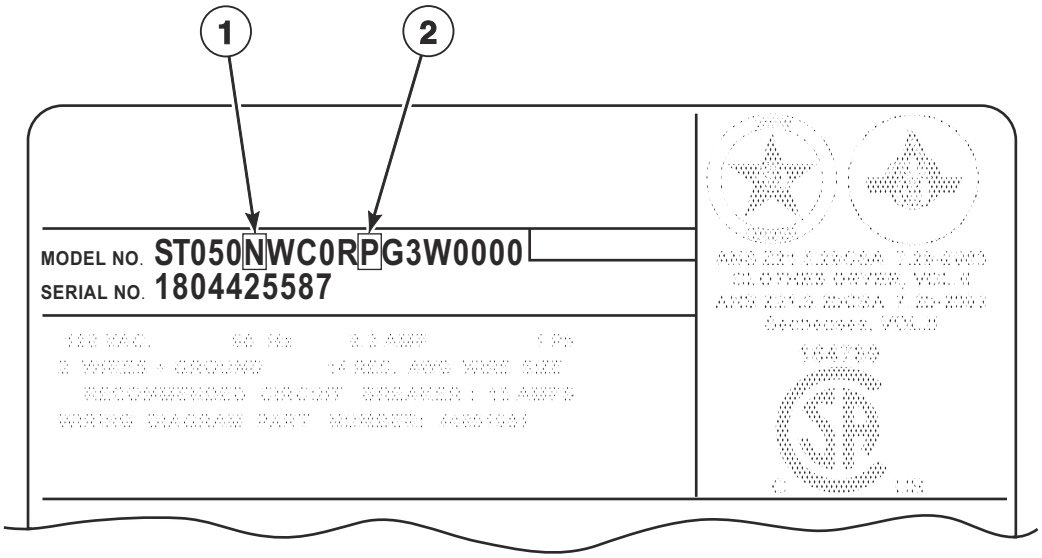

TMB3523P

© Copyright, Alliance Laundry Systems LLC – DO NOT COPY or TRANSMIT

Product Overview - Heat Source and Voltage

REF	PART NO.	DESCRIPTION	COMMENTS
1	-	Heat Source	C: Steam (CRN) D: Liquid Petroleum Gas (L.P.) E: Electric L: Liquid Petroleum Gas (L.P.) N: Natural Gas (N.G.) S: Steam
2	-	Voltage	B:100-120 Volt/50-60 Hertz/1 Phase; Gas and steam models E: 230-240 Volt/50-60 Hertz/1 Phase; Electric models F: 200-208 Volt/50-60 Hertz/3 Phase; Electric models G: 230-240 Volt/50-60 Hertz/3 Phase; Electric models H: 380 Volt/50-60 Hertz/3 Phase; Electric models J: 400-415 Volt/50-60 Hertz/3 Phase; Electric models K: 440 Volt/50-60 Hertz/3 Phase; Electric models L: 460-480 Volt/50-60 Hertz/3 Phase; Electric models N: 440-480 Volt/50-60 Hertz/3 Phase; Gas and steam models P: 380-415 Volt/50-60 Hertz/3 Phase; Gas and steam models X: 200-240 Volt/50-60 Hertz/1-3 Phase; Gas and steam models

© Copyright, Alliance Laundry Systems LLC – DO NOT COPY or TRANSMIT

Product Overview - FN Control Suffix

All Models Except M Models; OPL

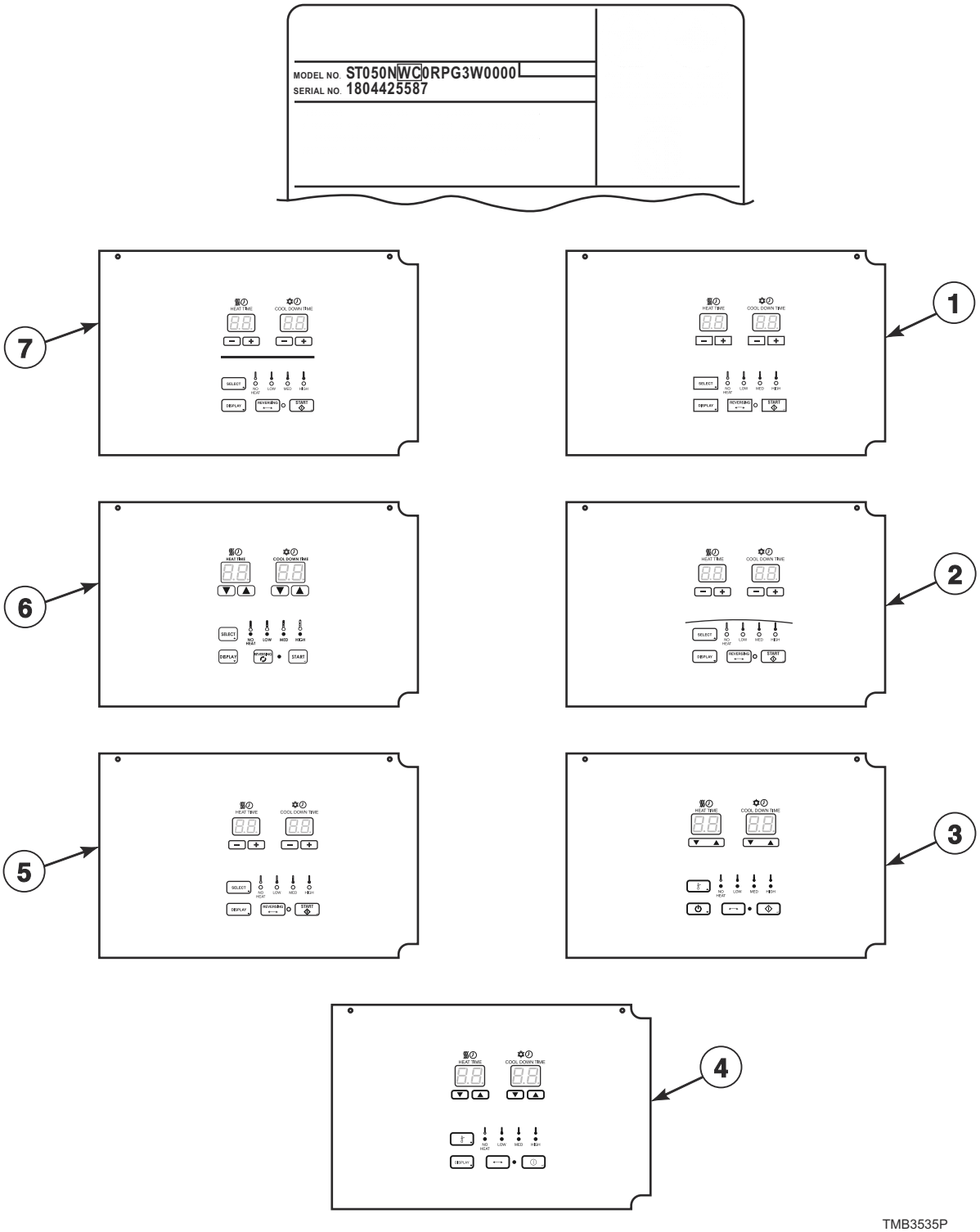

TMB3535P

© Copyright, Alliance Laundry Systems LLC – DO NOT COPY or TRANSMIT

Product Overview - FN Control Suffix

REF	PART NO.	DESCRIPTION	COMMENTS
1	-	Dual Digital Control	H models
2	-	Dual Digital Control	U models
3	-	Dual Digital Control	B models
4	-	Dual Digital Control	P models
5	-	Dual Digital Control	N models
6	-	Dual Digital Control	G and K models
7	-	Dual Digital Control	S models

© Copyright, Alliance Laundry Systems LLC – DO NOT COPY or TRANSMIT

Product Overview - DN and NN Control Suffixes

All Models Except M Models; OPL

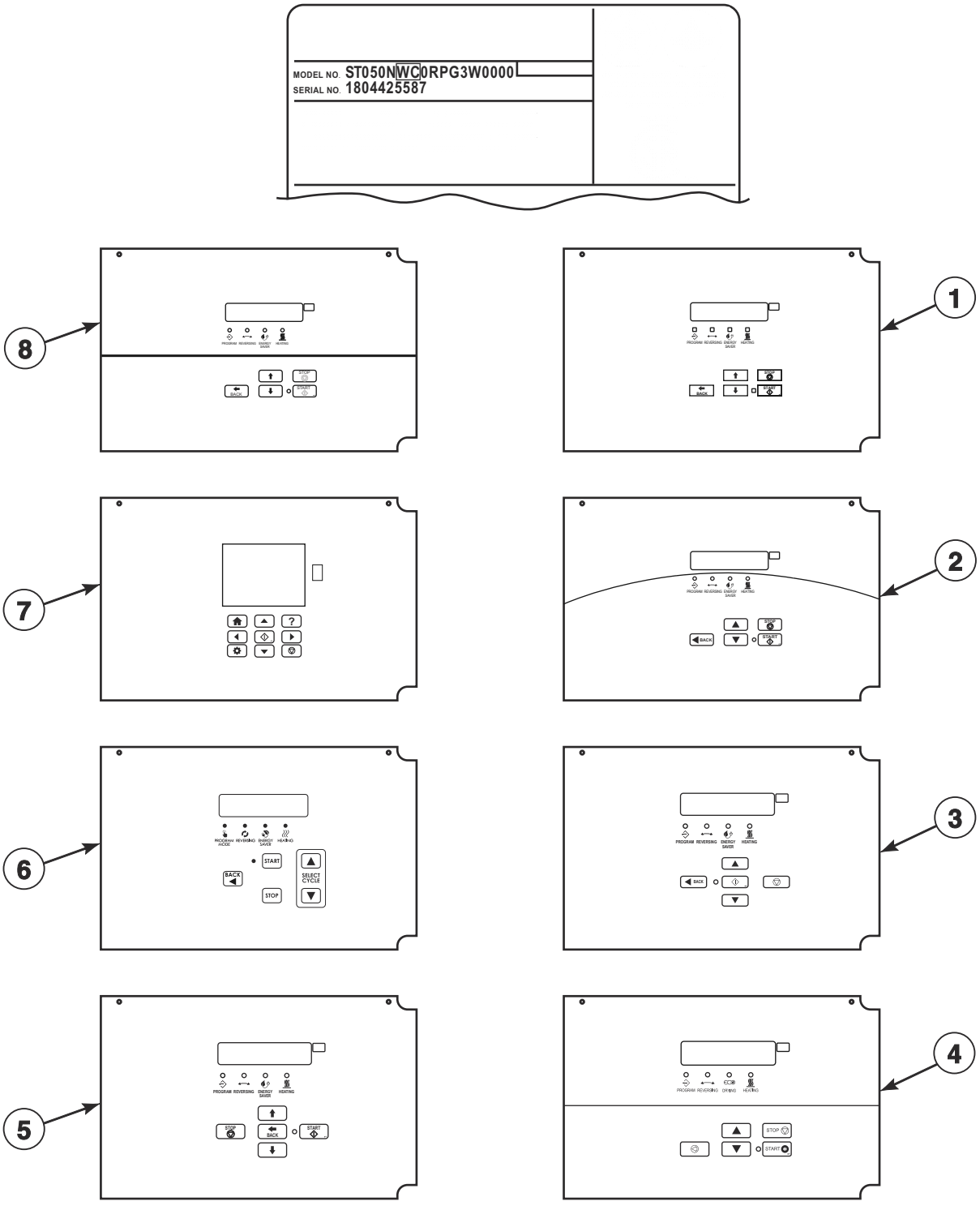

TMB3536P

© Copyright, Alliance Laundry Systems LLC – DO NOT COPY or TRANSMIT

Product Overview - DN and NN Control Suffixes

REF	PART NO.	DESCRIPTION	COMMENTS
1	-	Galaxy Control	H models
2	-	M-Series Control	U models
3	-	OPTimum Control	B models
4	-	OPL Micro Control	P models
5	-	OPL Micro Control	N models
6	-	OPL Micro Control	G and K models
7	-	UniLinc Control	U models
8	-	Quantum Gold Control	S models

© Copyright, Alliance Laundry Systems LLC – DO NOT COPY or TRANSMIT

Product Overview - N and W Control Suffixes

7th Position of the Model Number; All Models Except U Models; Vend

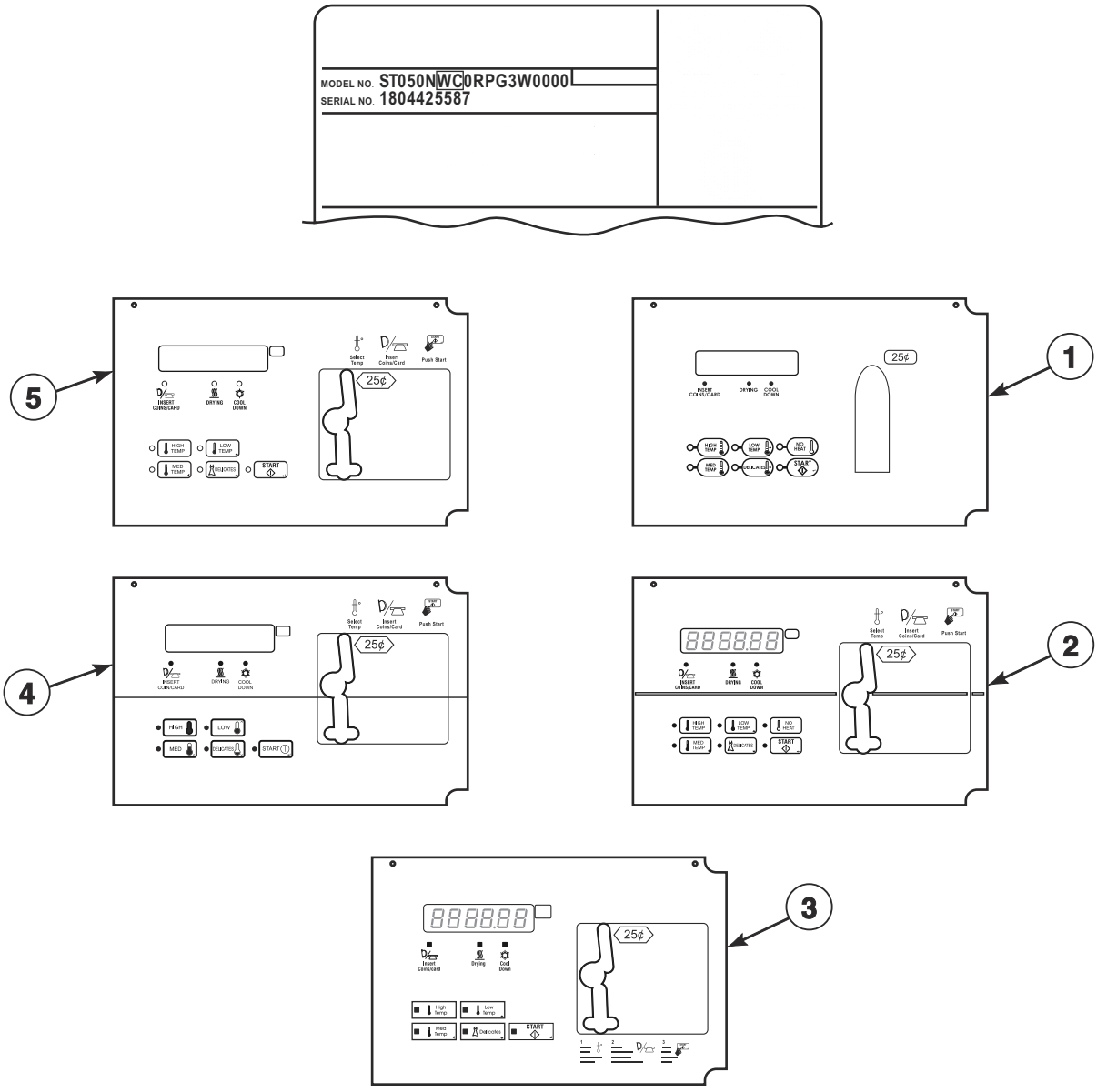

TMB3889P

© Copyright, Alliance Laundry Systems LLC – DO NOT COPY or TRANSMIT

Product Overview - N and W Control Suffixes

REF	PART NO.	DESCRIPTION	COMMENTS
1	-	Micro Control	G and K models
2	-	Quantum Gold Control	M and S models
3	-	Galaxy 600	H models
4	-	XQ Control	P models
5	-	EVO7S Control	B and N models

© Copyright, Alliance Laundry Systems LLC – DO NOT COPY or TRANSMIT

Product Overview - V Control Suffix

7th Position of the Model Number; B, H, P and S Models; Vend and OPL

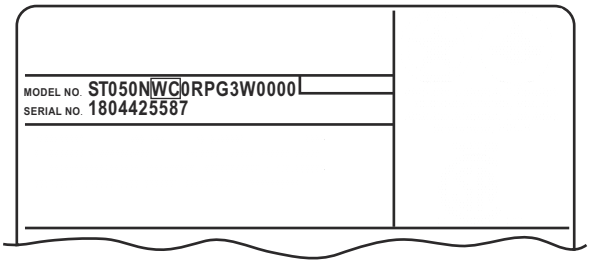

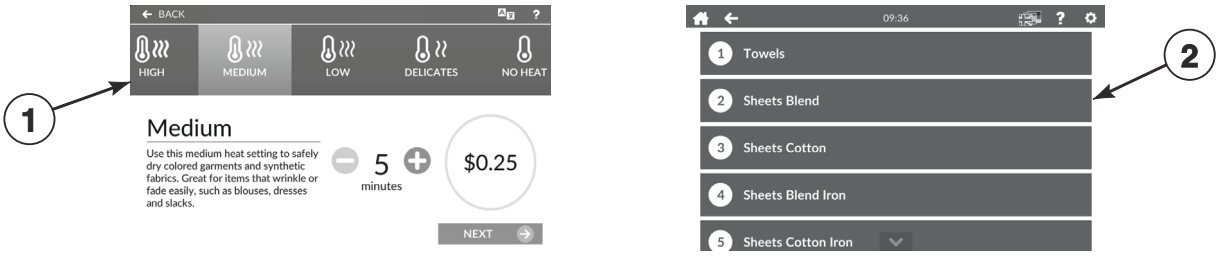

TMB3906P

© Copyright, Alliance Laundry Systems LLC – DO NOT COPY or TRANSMIT

Product Overview - V Control Suffix

REF	PART NO.	DESCRIPTION	COMMENTS
1	-	Touch Control	Vend; B, H, P and S models
2	-	Touch Control	OPL; B and P models

© Copyright, Alliance Laundry Systems LLC – DO NOT COPY or TRANSMIT

Control Box

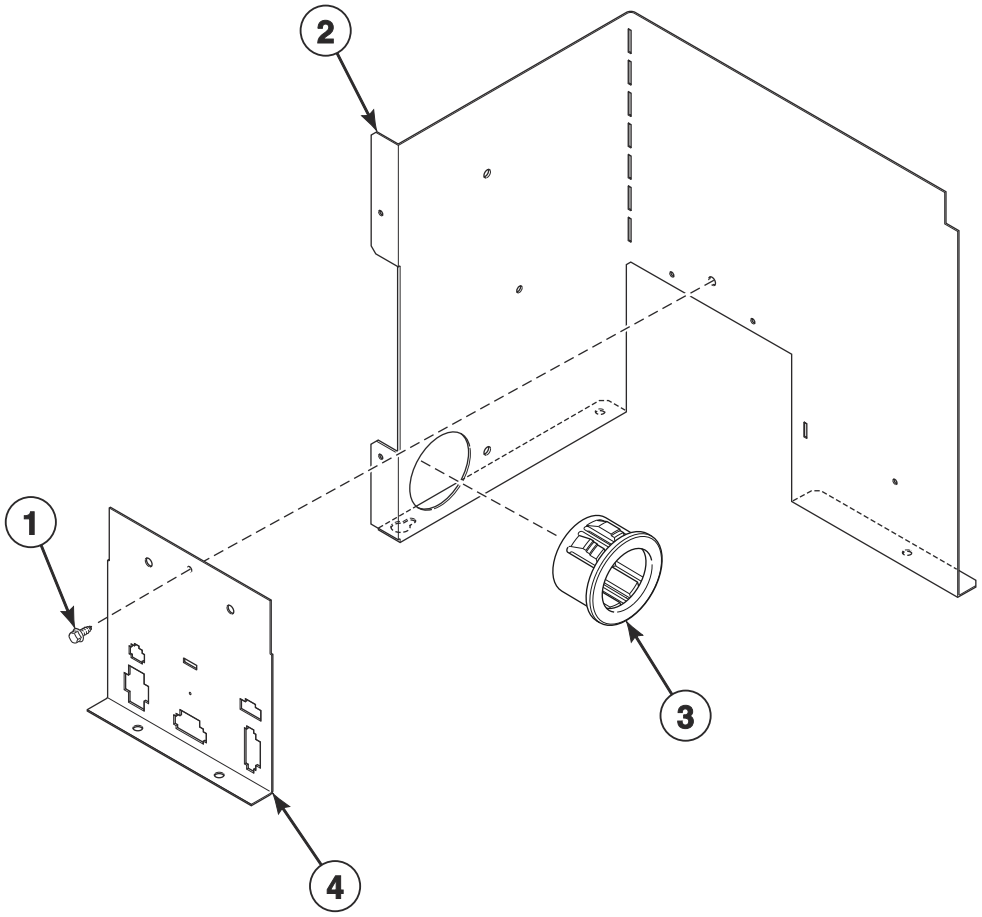

TMB3710P

© Copyright, Alliance Laundry Systems LLC – DO NOT COPY or TRANSMIT

Control Box

REF	PART NO.	DESCRIPTION	COMMENTS
	44363301	Main Harness	
1	430497	Screw	
2	44344101	Control Box Wrap	B, H, P and S models with V in 7th position
	44119101	Control Box Wrap	S models with F, N and W in 7th position
	44180101	Control Box Assembly	All models except S models with D, F, N and W in 7th position
3	D503235	Snap Bushing	Use with 44344101 Control Box Wrap
4	70307005	Control Housing Cover	

© Copyright, Alliance Laundry Systems LLC – DO NOT COPY or TRANSMIT

Fire Suppression System Control Box

All Gas and Steam Models Except M Models

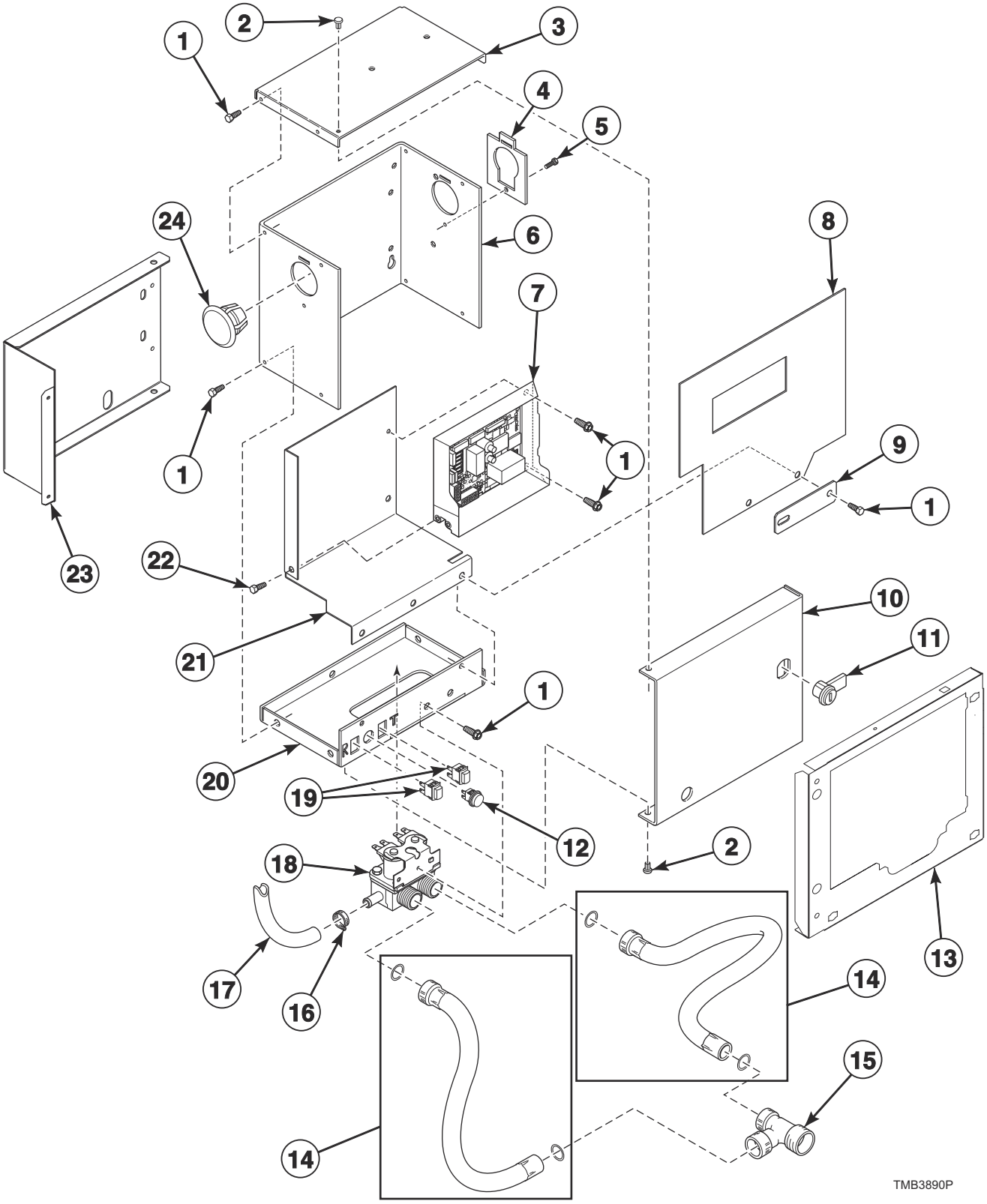

© Copyright, Alliance Laundry Systems LLC – DO NOT COPY or TRANSMIT

Fire Suppression System Control Box

REF	PART NO.	DESCRIPTION	COMMENTS
	44340301	Cold Weather Kit	
	70155601	Key	RL001; Use with item 11
	44375604	Control Harness	
	44375605	Water Valve Harness	
	44375602	Power Sensor Harness	
	44375606	Sensor Harness	
	44375601	Interconnect Harness	
	44375603	Power Sensor Harness	
	44324501	Warning Label	F.S.S.; T and G market models
	44324500	Label Kit	F.S.S.; IEC models
	F8614401	Shock Warning Label	T and G market models
	F8614201	Shock Warning Label	IEC models
	44318200	Label Kit	IEC models
	44324502	Warning Label	
	44318201	Label	T and G market models
1	430497	Screw	
2	M400713	Drive Rivet	
3	44307101	Control Box Top	
4	70523301	Harness Adapter Plate	
5	51780	Screw	
6	44306701	Control Box Housing	
7	70511601	Control	
8	44326801	Shield	
9	70551701	Filter Mounting Plate	
10	44065201	Control Box Cover	
11	70733701	Lock, Key and Nut Kit	RL001 key code; Optional if same key is to be used for control lock
12	801432	Light	
13	44376701	Rear Guard	
14	202799	Fill Hose	2 required; GHT
	202800	Fill Hose	2 required; BSPP
15	44069101	Hose Fitting	T and G market models
16	36801	Hose Clamp	
17	44073304	Hose	14 inches; Outlet hose
18	70519801	Mixing Valve	
19	801434W	Push-to-Start Switch	2 required
20	44065301	Control Box Base	
21	44306601	Mixing Valve Shield Bracket	
22	804608	Screw	
23	44376601	Mounting Bracket	
24	70180001	Plug	

© Copyright, Alliance Laundry Systems LLC – DO NOT COPY or TRANSMIT

Dual Digital Control

All Models Except M Models; Models with F in the 7th Position

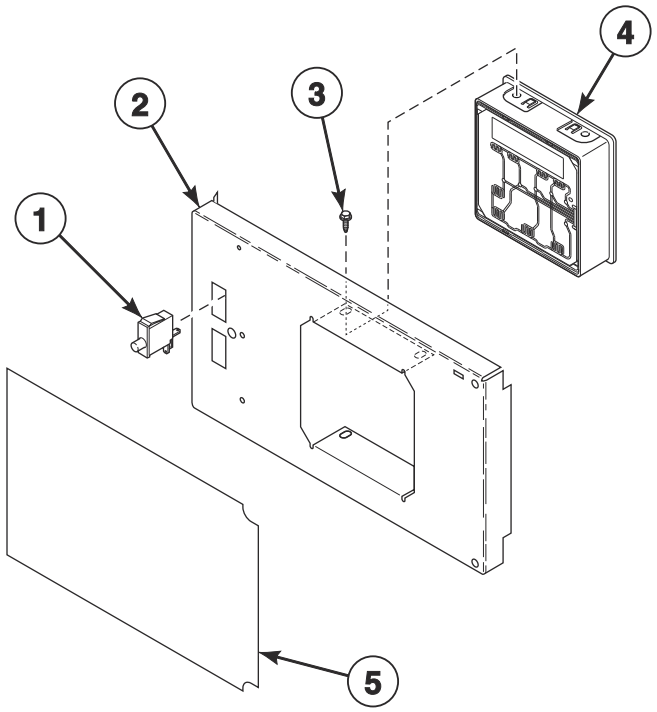

TMB3505P

© Copyright, Alliance Laundry Systems LLC – DO NOT COPY or TRANSMIT

Dual Digital Control

REF	PART NO.	DESCRIPTION	COMMENTS
	44334004	Vend Activation Harness	
1	70413301	Pushbutton Switch	
2	70497101	Control Plate	All models except S models
3	804608	Screw	4 required
4	70523101	Control Assembly	P models; Blue
	70479801	Control Assembly	G, H, K, N, S and U models; Green
	70479901	Control Assembly	B models; Red
5	70539102	Overlay	B and N models; Nonreversing
	70539101	Overlay	B and N models; Reversing
	70547502	Overlay	G and K models; Nonreversing
	70547501	Overlay	G and K models; Reversing
	70691302	Overlay	H models; Nonreversing
	70691301	Overlay	H models; Reversing
	70545502	Overlay	P models; Nonreversing
	70545501	Overlay	P models; Reversing
	70675002	Overlay	S models; Nonreversing
	70675001	Overlay	S models; Reversing
	70519002	Overlay	U models; Nonreversing
	70519001	Overlay	U models; Reversing

© Copyright, Alliance Laundry Systems LLC – DO NOT COPY or TRANSMIT

Electronic Display Control - Vend Models with N or W in the 7th Position

All Models Except U Models

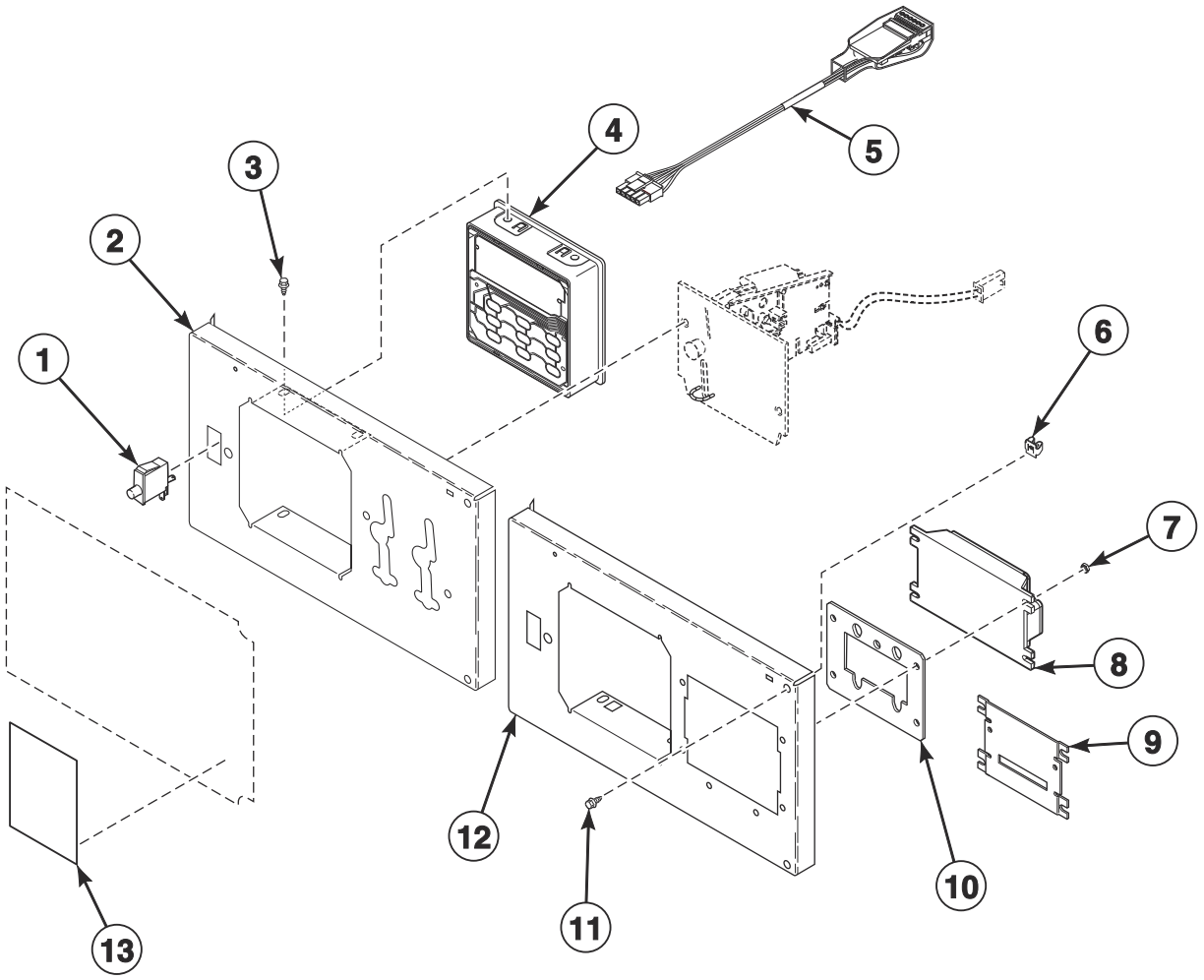

TMB3832P

© Copyright, Alliance Laundry Systems LLC – DO NOT COPY or TRANSMIT

Electronic Display Control - Vend Models with N or W in the 7th Position

REF	PART NO.	DESCRIPTION	COMMENTS
	F8519403	Emergency Stop Bypass Harness	T and G market models
	70707901	Main Harness	
	44334004	Vend Activation Harness	
	F8719301	Fob Communication Harness	
	44378104	Interface Harness	Central pay to front end control
	44334103	Bypass Harness	Vault Switch
	44334104	Coin Vault Switch Harness	
1	70413301	Pushbutton Switch	
2	70496601	Control Plate and Studs Assembly	Coin and central pay; All models except S models
3	804608	Screw	4 required
4	70523003P	Control Assembly	P models; Blue
	70478803P	Control Assembly	G, H, K, M, N and S models; Green
	70478903P	Control Assembly	B models; Red
5	203361P	Machine ID Control Assembly	Model or serial number is required when ordering
6	70030501	Expansion Clip	
7	70054	Nut	
8	205135	Fob Reader Control Assembly	
9	44089501	Slot Card Plate Assembly	
10	70208801	Mounting Plate	
11	M411072	Screw	
12	70497201	Control Plate Assembly	Card and FOB; All models except S models
13	F8205101	Overlay	S models; Single drop; Left
	70557001	Overlay	B and S models; Prep for card
	70557002	Overlay	B and S models; Central pay
	70295101	Overlay	S models; World drop
	70556801	Overlay	H models; World drop
	70556501	Overlay	H models; Prep for card
	70556502	Overlay	H models; Central pay
	70556601	Overlay	H models; Single drop; Left
	70556901	Overlay	H models; Citron; World drop
	70518101	Overlay	H models; Citron; Prep for card
	70518102	Overlay	H models; Citron; Central pay
	70556701	Overlay	H models; Citron; Left
	70556201	Overlay	P models; Single drop; Right
	70556401	Overlay	P models; Prep for card
	70556402	Overlay	P models; Central pay
	70556301	Overlay	P models; Single drop; Left
	F8733901	Overlay	S models; FOB
	F8734201	Overlay	H models; FOB
	F8736501	Overlay	H models; Citron: FOB

© Copyright, Alliance Laundry Systems LLC – DO NOT COPY or TRANSMIT

Electronic Display Control Overlays- Vend Models with N or W in the 7th Position

All Models Except U Models

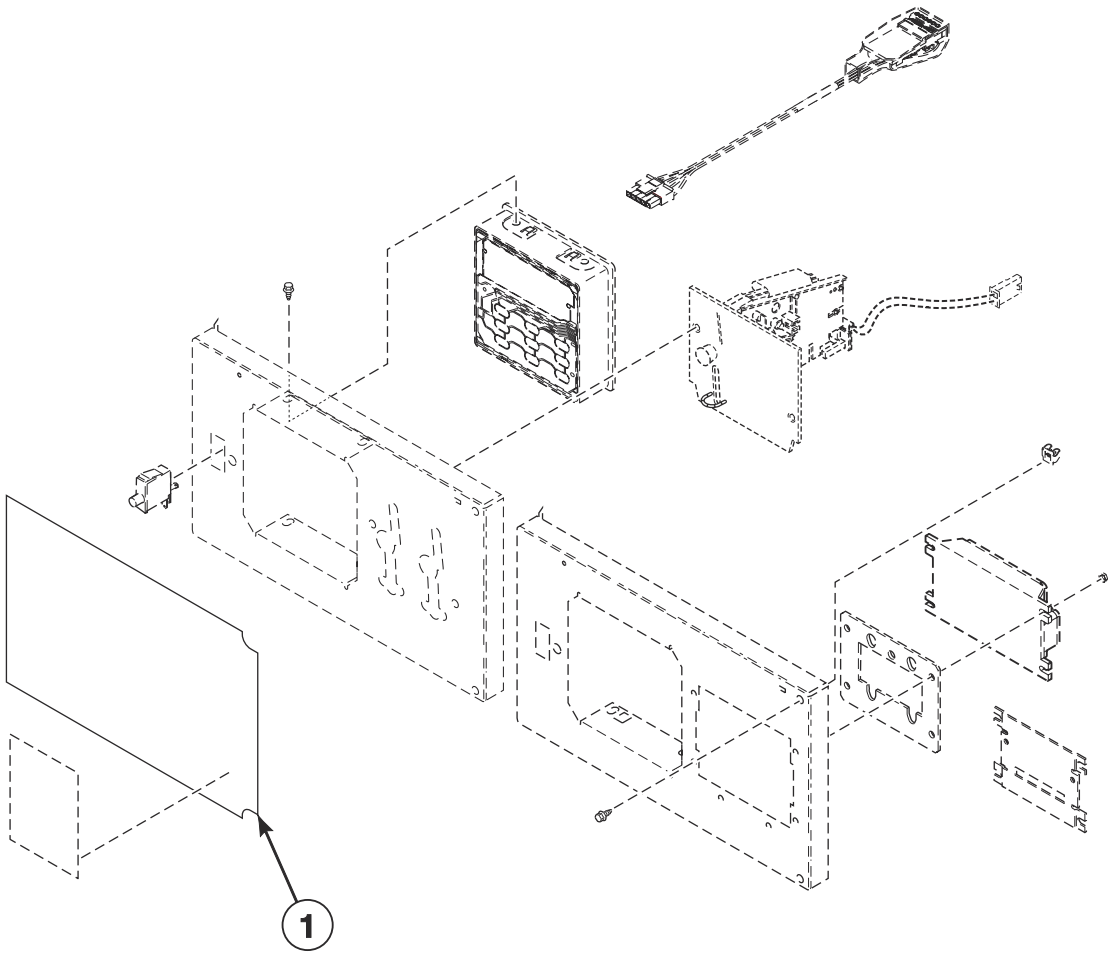

TMB3832PA

© Copyright, Alliance Laundry Systems LLC – DO NOT COPY or TRANSMIT

Electronic Display Control Overlays- Vend Models with N or W in the 7th Position

REF	PART NO.	DESCRIPTION	COMMENTS
1	70681701	Overlay	S models; Single drop
	70681702	Overlay	S models; Dual drop
	70681703	Overlay	S models; Card ready
	70681704	Overlay	S models; Central pay
	70681705	Overlay	S models; World drop
	70705701	Overlay	S models with D in 17th position
	70690401	Overlay	H models; Single drop
	70690402	Overlay	H models; Dual drop
	70690403	Overlay	H models; Card ready
	70690404	Overlay	H models; Central pay
	70690405	Overlay	H models; World drop
	70690701	Overlay	H models; Single drop; Citron
	70690702	Overlay	H models; Dual drop; Citron
	70690703	Overlay	H models; Card ready; Citron
	70571101	Overlay	B models; Single drop
	70571102	Overlay	B models; Dual drop
	70571103	Overlay	B models; Card ready
	70541201	Overlay	P models; Single drop
	70541202	Overlay	P models; Dual drop
	70541203	Overlay	P models; Card ready
	70679201	Overlay	M models; Single drop
	70571101	Overlay	N models; Single drop
	70571102	Overlay	N models; Dual drop
	70571103	Overlay	N models; Card ready
	70626001	Overlay	G and K models; Single drop
	70626002	Overlay	G and K models; Dual drop
	70626101	Overlay	G and K models; Card ready

© Copyright, Alliance Laundry Systems LLC – DO NOT COPY or TRANSMIT

Electronic Display Control - OPL Models with N in the 7th Position

All Models Except M Models

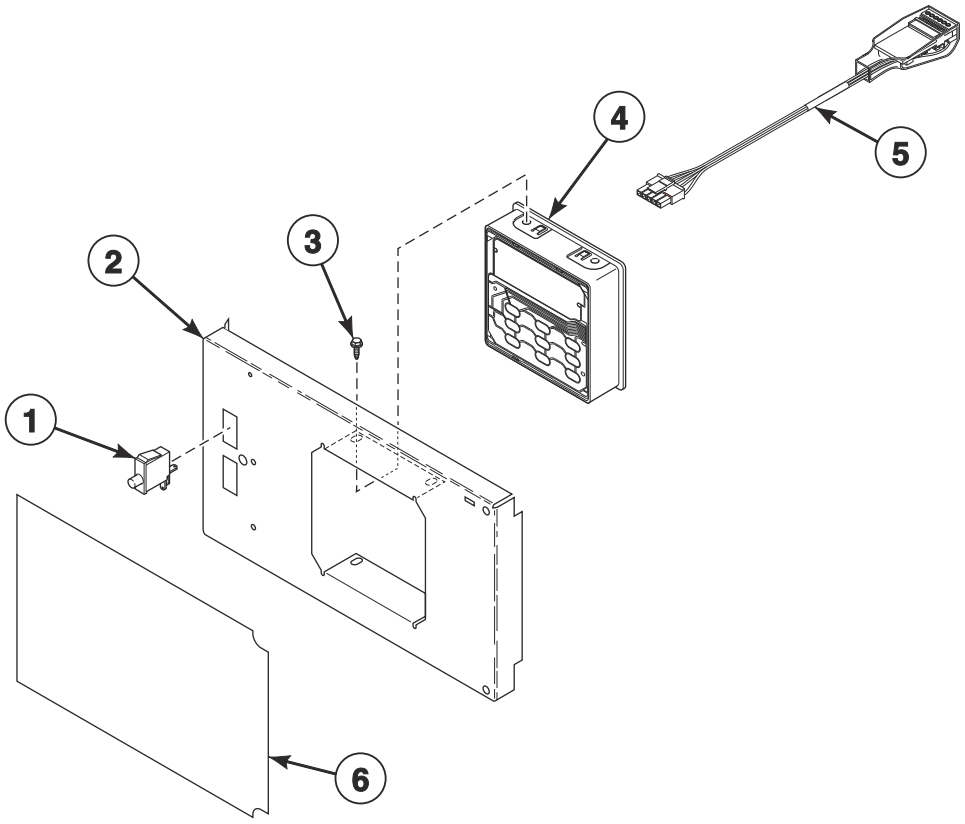

TMB3680P

© Copyright, Alliance Laundry Systems LLC – DO NOT COPY or TRANSMIT

Electronic Display Control - OPL Models with N in the 7th Position

REF	PART NO.	DESCRIPTION	COMMENTS
	44334004	Vend Activation Harness	
1	70413301	Pushbutton Switch	
2	70497101	Control Plate	All models except S models
3	804608	Screw	4 required
4	70523004P	Control Assembly	P models
	70478804P	Control Assembly	G, H, K, N, S and U models
	70478904P	Control Assembly	B models
5	203361P	Machine ID Control Assembly	Model or serial number is required when ordering
6	70673301	Overlay	S models; Reversing
	70673302	Overlay	S models; Nonreversing
	70571401	Overlay	U models; Reversing
	70571402	Overlay	U models; Nonreversing
	70691001	Overlay	H models; Reversing
	70691002	Overlay	H models; Nonreversing
	70548801	Overlay	B and N models; Reversing
	70548802	Overlay	B and N models; Nonreversing
	70547801	Overlay	G and K models; Reversing
	70547802	Overlay	G and K models; Nonreversing
	70571601	Overlay	P models; Reversing
	70571602	Overlay	P models; Nonreversing

© Copyright, Alliance Laundry Systems LLC – DO NOT COPY or TRANSMIT

3.5 Inch Graphical Control

U Models with D in the 7th Position

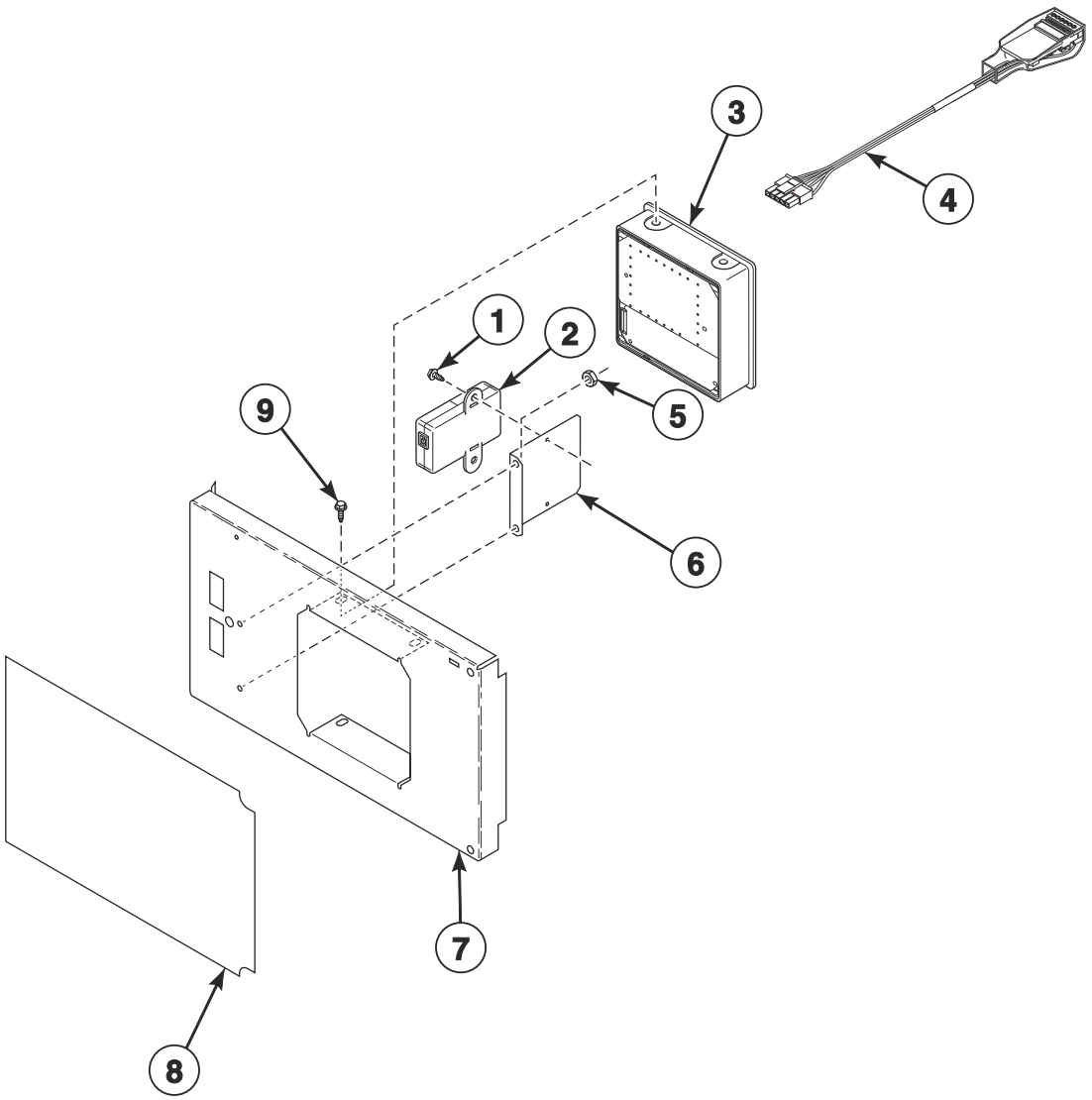

TMB3681P

© Copyright, Alliance Laundry Systems LLC – DO NOT COPY or TRANSMIT

3.5 Inch Graphical Control

REF	PART NO.	DESCRIPTION	COMMENTS
	F8617901	Harness	USB
1	51780	Screw	2 required
2	203440	USB-Serial Interface Assembly	
3	70543104	Control Assembly	
4	203361P	Machine ID Control Assembly	Model or serial number is required when ordering
5	44071201	Nut	2 required
6	70547001	USB Bracket	
7	70570201	Control Door and Studs Assembly	
8	70595401	Overlay	
9	804608	Screw	4 required

© Copyright, Alliance Laundry Systems LLC – DO NOT COPY or TRANSMIT

Touch Control - Vend Models with V in the 7th Position

B, H, P and S Models

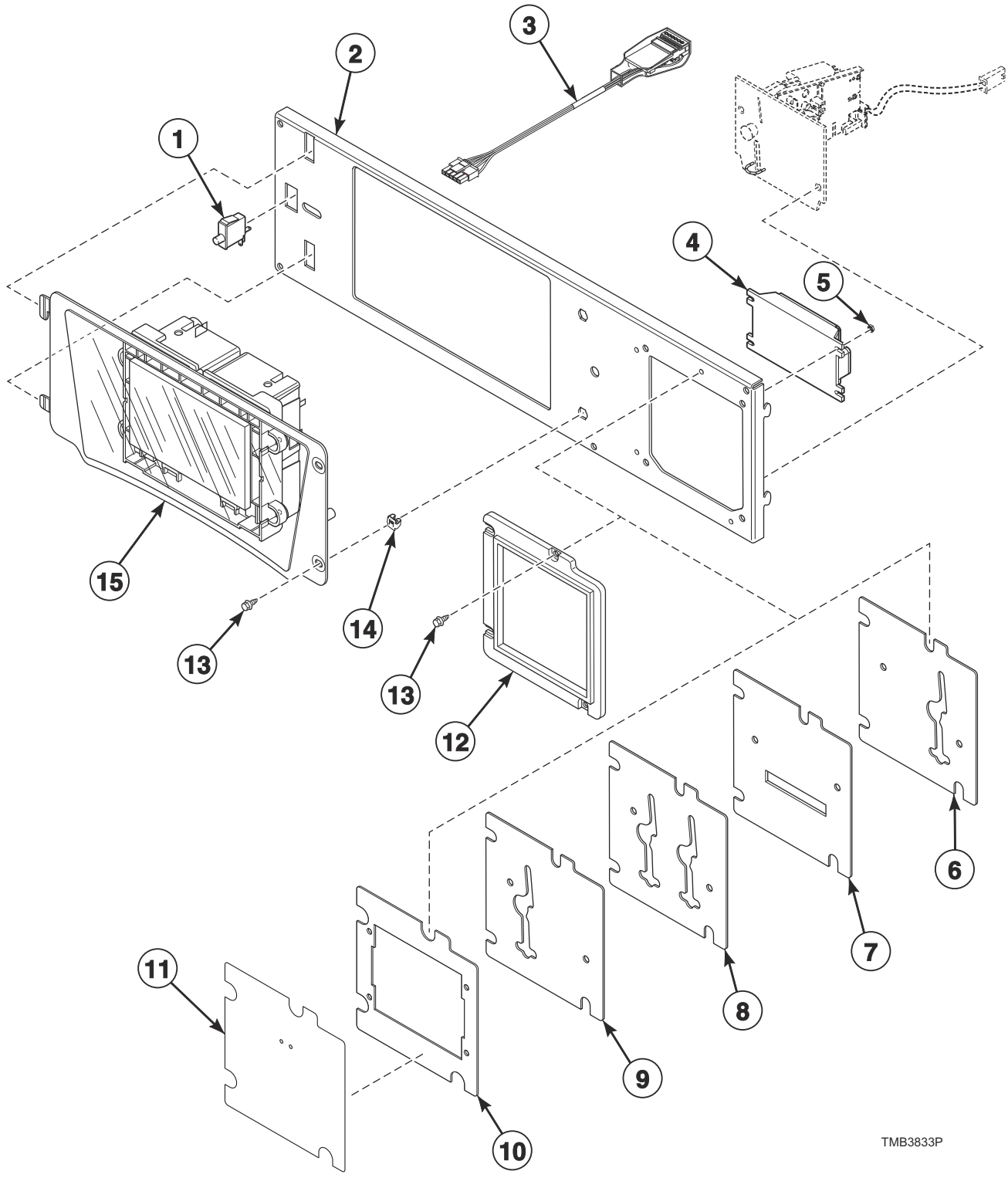

© Copyright, Alliance Laundry Systems LLC – DO NOT COPY or TRANSMIT

Touch Control - Vend Models with V in the 7th Position

REF	PART NO.	DESCRIPTION	COMMENTS
	44334002	Vend Activation Harness	
	44087101	Nut	2 required
	204692	Wireless Control Label	2 required
	203440	USB-Serial Interface Assembly	
	44374701	App Pay Overlay Kit	
	F8647701P	Control Screen Replacement Kit	
	F8519403	Emergency Stop Bypass Harness	T and G market models
	70707901	Main Harness	
	F8719302	Fob Communication Harness	
	44378104	Interface Harness	Central pay to front end control
	F8713906	Serial Pay Harness	Card
	44334103	Bypass Harness	Vault switch
	44334104	Coin Vault Switch Harness	
1	70413301	Pushbutton Switch	
2	70598601	Control Mounting Bracket	
3	203361P	Machine ID Control Assembly	
4	205135	Fob Reader Control Assembly	
5	70054	Nut	
6	F8574205	Accessory Plate Assembly	World drop
7	F8574204	Card Reader Plate	Card
8	F8574203	Accessory Plate Assembly	Dual drop
9	F8574202	Accessory Plate Assembly	Single drop
10	F8734601	Accessory Plate Assembly	FOB
11	F8734001	Overlay	S models; FOB
	F8734301	Overlay	H models; FOB
	F8736601	Overlay	H models; Citron; FOB
12	F8632501	Vend Plate	
13	39733	Screw	
14	70030501	Expansion Clip	2 required
15	70697001P	Control Assembly	

© Copyright, Alliance Laundry Systems LLC – DO NOT COPY or TRANSMIT

Touch Control - OPL Models with V in the 7th Position

B and P Models

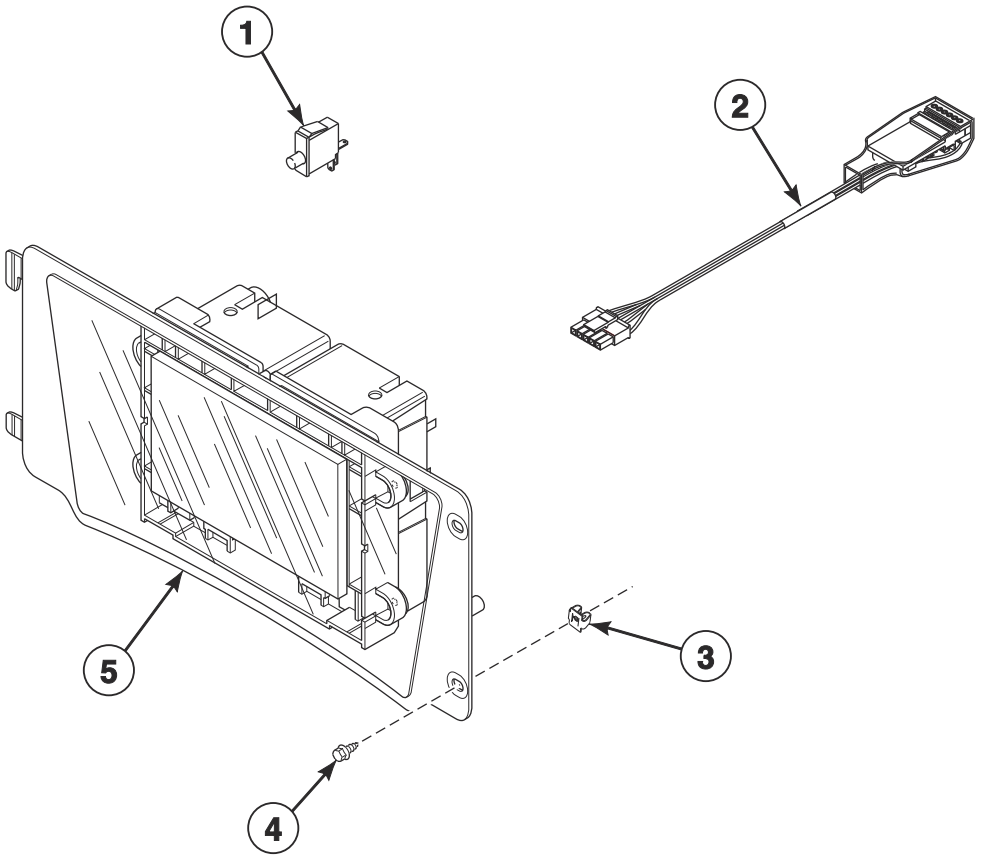

TMB3828P

© Copyright, Alliance Laundry Systems LLC – DO NOT COPY or TRANSMIT

Touch Control - OPL Models with V in the 7th Position

REF	PART NO.	DESCRIPTION	COMMENTS
	44087101	Nut	2 required
	204692	Wireless Control Label	2 required
	203440	USB-Serial Interface Assembly	
	44374701	App Pay Overlay Kit	
	F8647701P	Control Screen Replacement Kit	
	70707901	Main Harness	
1	70413301	Pushbutton Switch	
2	203361P	Machine ID Control Assembly	
3	70030501	Expansion Clip	2 required
4	39733	Screw	
5	70597803	Control Assembly	

© Copyright, Alliance Laundry Systems LLC – DO NOT COPY or TRANSMIT

Coin Drops

All Models Except U Models

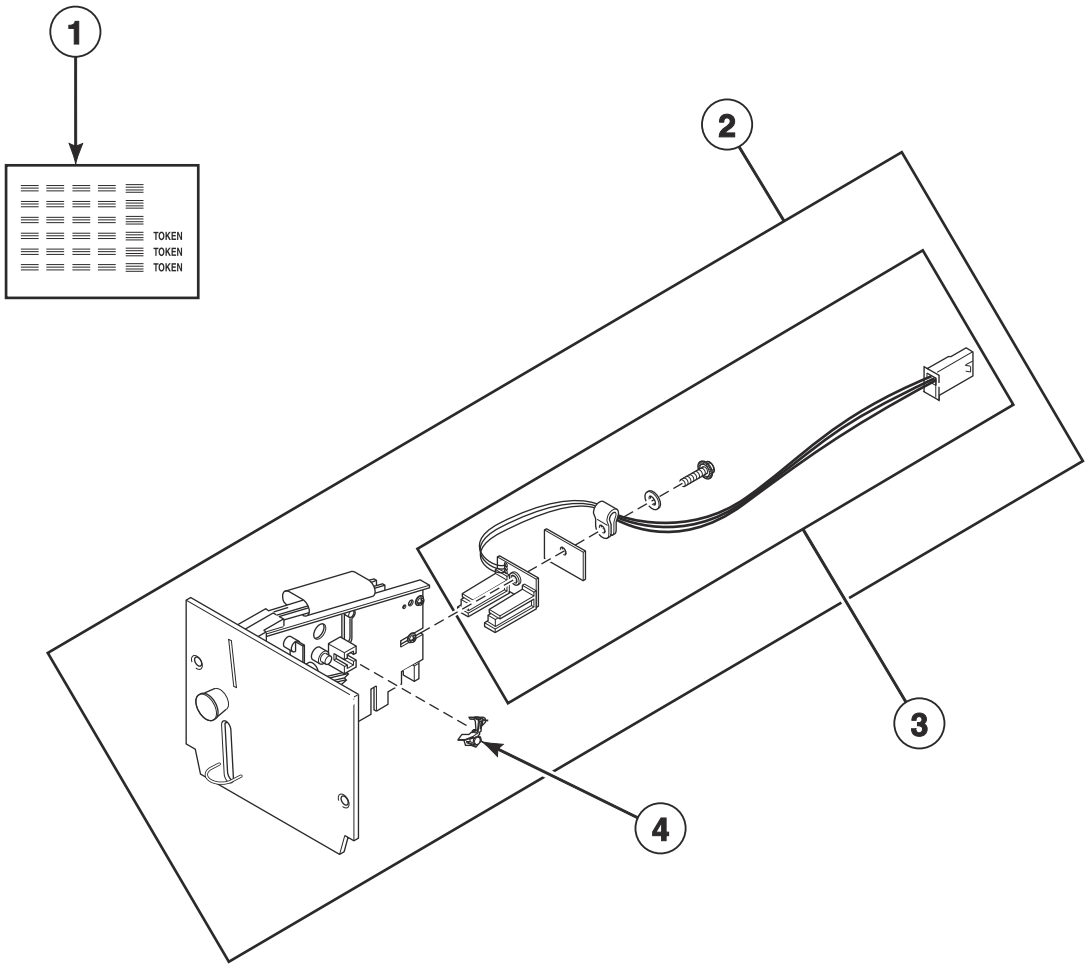

TMB3510P

© Copyright, Alliance Laundry Systems LLC – DO NOT COPY or TRANSMIT

Coin Drops

REF	PART NO.	DESCRIPTION	COMMENTS
1	38725	Coin Identification Paper	
2	70441601P	Coin Drop	Single; U.S.A.; $.25
	38475	Coin Drop Assembly	Single; Japan; 100 yen
	38464P	Coin Drop Assembly	Single; Canada; .25
	CK077	Coin Drop Kit	Single; Taiwan; 10 NT
	70506901	Coin Drop Assembly	Single; Singapore; $1.00 NEW
	70441603	Coin Drop	Dual; U.S.A.; $.25 and $1.00
	38519	Coin Drop Assembly	Dual; Japan; 100 yen and 500 yen
	70441602	Coin Drop Assembly	Dual; Canada; .25 and 1.00
	38467	Coin Drop Assembly	Dual; Australia; $0.20 and $1.00
	70447301	Coin Drop Assembly	Dual; Australia; $1.00 and $2.00
	70283102	Coin Drop Assembly	Dual; 0.20 and 0.50 Euro
	210195	Coin Drop Assembly	Dual; 0.20 and 1.00 Euro
	210196	Coin Drop Assembly	Dual; 0.50 and 1.00 Euro
	F0160737-00	Coin Meter	Dual; 0.50 and 2.00 Euro
	70281102	Coin Drop Assembly	Dual; Taiwan; 10 and 50 NT
	70482401	Coin Drop Assembly	Dual; New Zealand; $1.00 and $2.00
	38462P	Coin Drop Assembly	Single; Token; STD 118-1
	38463	Coin Drop Assembly	Single; Token; STD 118-5
	38963P	Coin Drop	Single; Token STD 118-16
	CK097	Coin Drop Kit	Single; Jeton 08MS
	201141	Coin Drop Assembly	Single; Token; Jeton wh121
	70471601	Coin Drop Assembly	Single; Token; 7K
	70513302	Electronic Coin Drop Assembly	Euro and Great Britain coins
	70513310	Electronic Coin Drop Assembly	Japan and Thailand coins
	70513304	Electronic Coin Drop Assembly	Australia, New Zealand, Hong Kong and South Korea coins
	70513303	Electronic Coin Drop Assembly	Denmark, Norway and Euro coins
	70513306	Electronic Coin Drop Assembly	Mexico, Ecuador and U.S.A. coins
	70294107	Electronic Coin Drop Assembly	Lithuania, Latvia and Euro coins
	70513311	Electronic Coin Drop Assembly	China and Malaysia coins
	70513318	Electronic Coin Drop Assembly	South African 1, 2 and 5 rand coins
	70513309	Electronic Coin Drop Assembly	Euro coins
	70513312	Electronic Coin Drop Assembly	Russia coins
	70513313	Electronic Coin Drop Assembly	Philippines coins
	70513314	Electronic Coin Drop Assembly	Thailand coins
	70513315	Electronic Coin Drop Assembly	Chile coins
	70513316	Electronic Coin Drop Assembly	Singapore coins
3	200674P	Opto Coupler	
4	201595P	Wire Guard	

© Copyright, Alliance Laundry Systems LLC – DO NOT COPY or TRANSMIT

Coin Drop Kits

All Models Except U Models

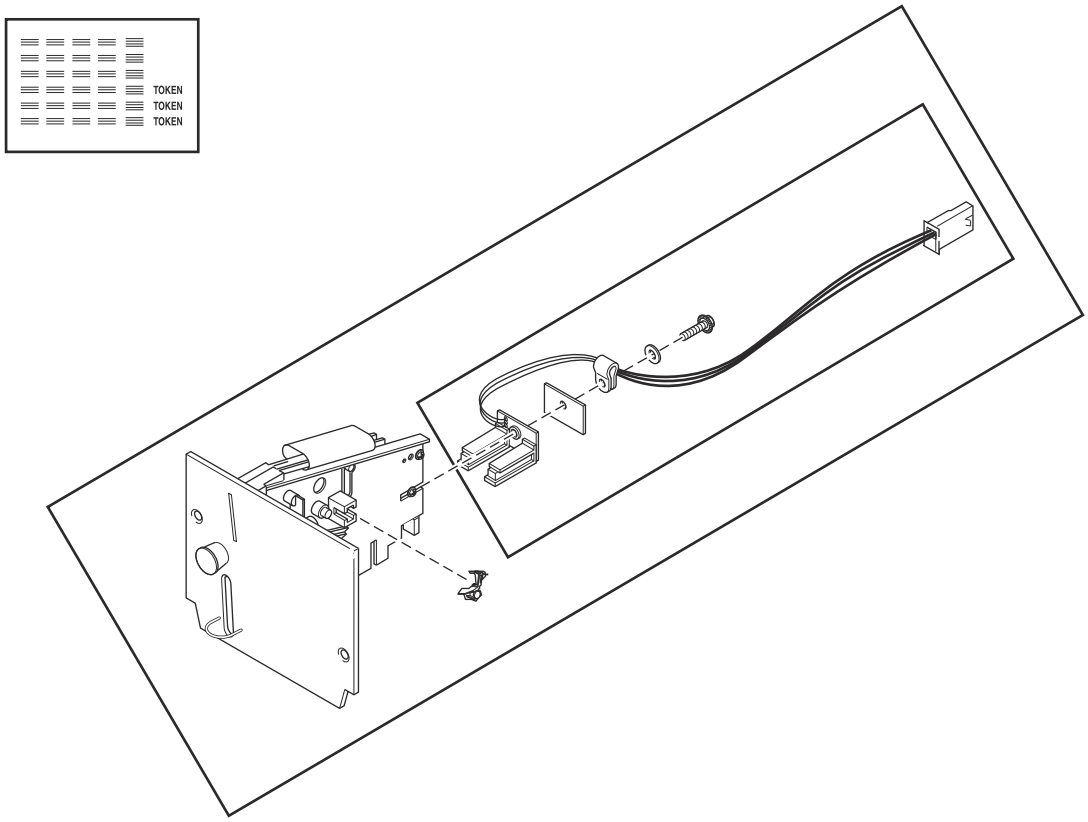

TMB3510PA

© Copyright, Alliance Laundry Systems LLC – DO NOT COPY or TRANSMIT

Coin Drop Kits

REF	PART NO.	DESCRIPTION	COMMENTS
	CK115	Electronic Coin Drop Kit	United States and Canada
	CK099	Electronic Coin Drop Kit	Australia (default), New Zealand, Hong Kong, South Korea and Malaysia
	CK100	Electronic Coin Drop Kit	United Kingdom (default) and Europe
	CK101	Electronic Coin Drop Kit	Europe (default), Denmark and Norway
	CK125	Electronic Coin Drop Kit	South Africa
	CK109	Electronic Coin Drop Kit	Euro
	CK110	Electronic Coin Drop Kit	Mexico (default), Ecuador and United States
	CK113	Electronic Coin Drop Kit	Japan and Taiwan
	CK116	Electronic Coin Drop Kit	Malaysia (default) and China
	CK117	Electronic Coin Drop Kit	Russia
	CK118	Electronic Coin Drop Kit	Philippine
	CK119	Electronic Coin Drop Kit	Thailand
	CK120	Electronic Coin Drop Kit	Chile
	CK121	Electronic Coin Drop Kit	Singapore
	CK122	Coin Drop Kit	New Zealand; 1.00 and 2.00

© Copyright, Alliance Laundry Systems LLC – DO NOT COPY or TRANSMIT

Network Board Components

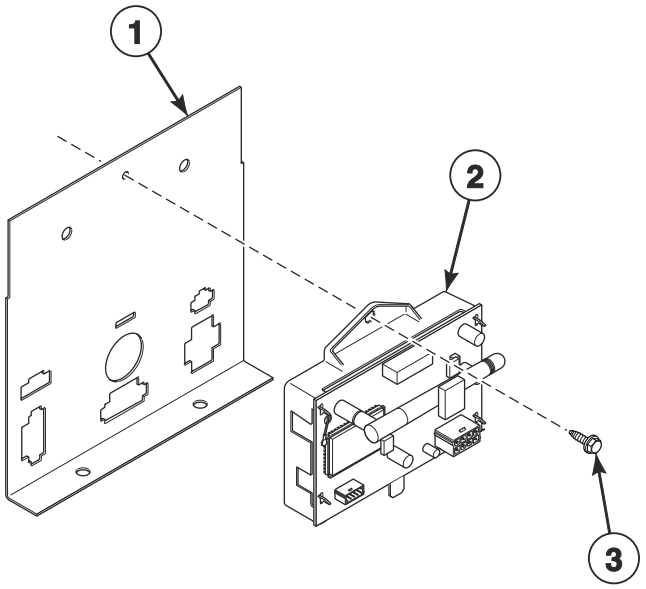

TMB3834P

© Copyright, Alliance Laundry Systems LLC – DO NOT COPY or TRANSMIT

Network Board Components

REF	PART NO.	DESCRIPTION	COMMENTS
	70609701	Wireless Network Kit	
	F8674006	Wireless Network Harness	
	204692	Wireless Control Label	
	203346	USB IR Interface Kit	
	70666806	Fob Reader Kit	
1	70307005	Control Housing Cover	
2	807211	Wireless Network Control Assembly	
3	F8206901	Screw	

© Copyright, Alliance Laundry Systems LLC – DO NOT COPY or TRANSMIT

Emergency Stop Button - IEC OPL Models

A, H, J, K, R and U in the 2nd Position

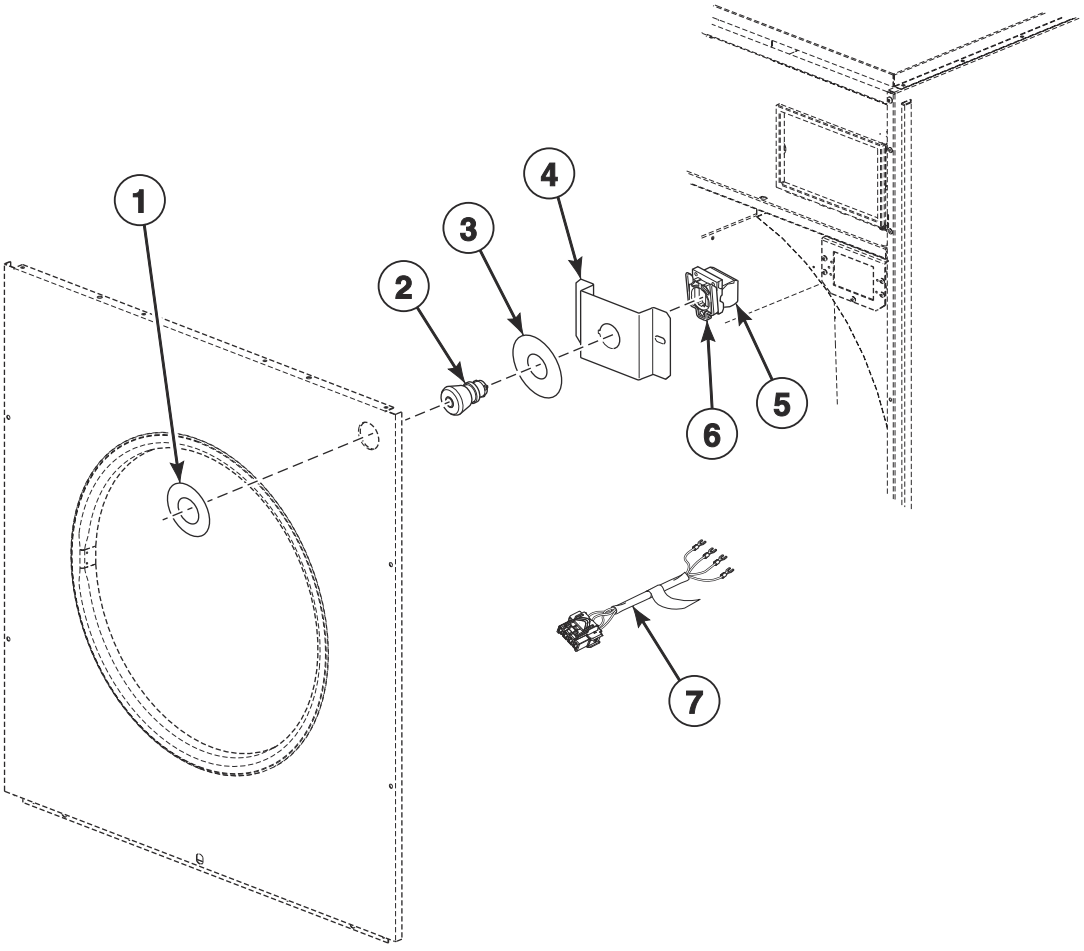

TMB3513P

© Copyright, Alliance Laundry Systems LLC – DO NOT COPY or TRANSMIT

Emergency Stop Button - IEC OPL Models

REF	PART NO.	DESCRIPTION	COMMENTS
	70580301	Emergency Stop Button Kit	Includes items 2-4
	70631102	Emergency Stop Interconnect Harness	
1	44012903	Emergency Stop Label	
2	F200233500	Emergency Stop Pushbutton	
3	44012901	Emergency Stop Label	
4	70550401	Emergency Stop Mounting Bracket	
5	F8069501	Contact Switch	2 required
6	F8538101	Contact Base	
7	44272401	Emergency Stop Harness	

© Copyright, Alliance Laundry Systems LLC – DO NOT COPY or TRANSMIT

Cabinet Front Components

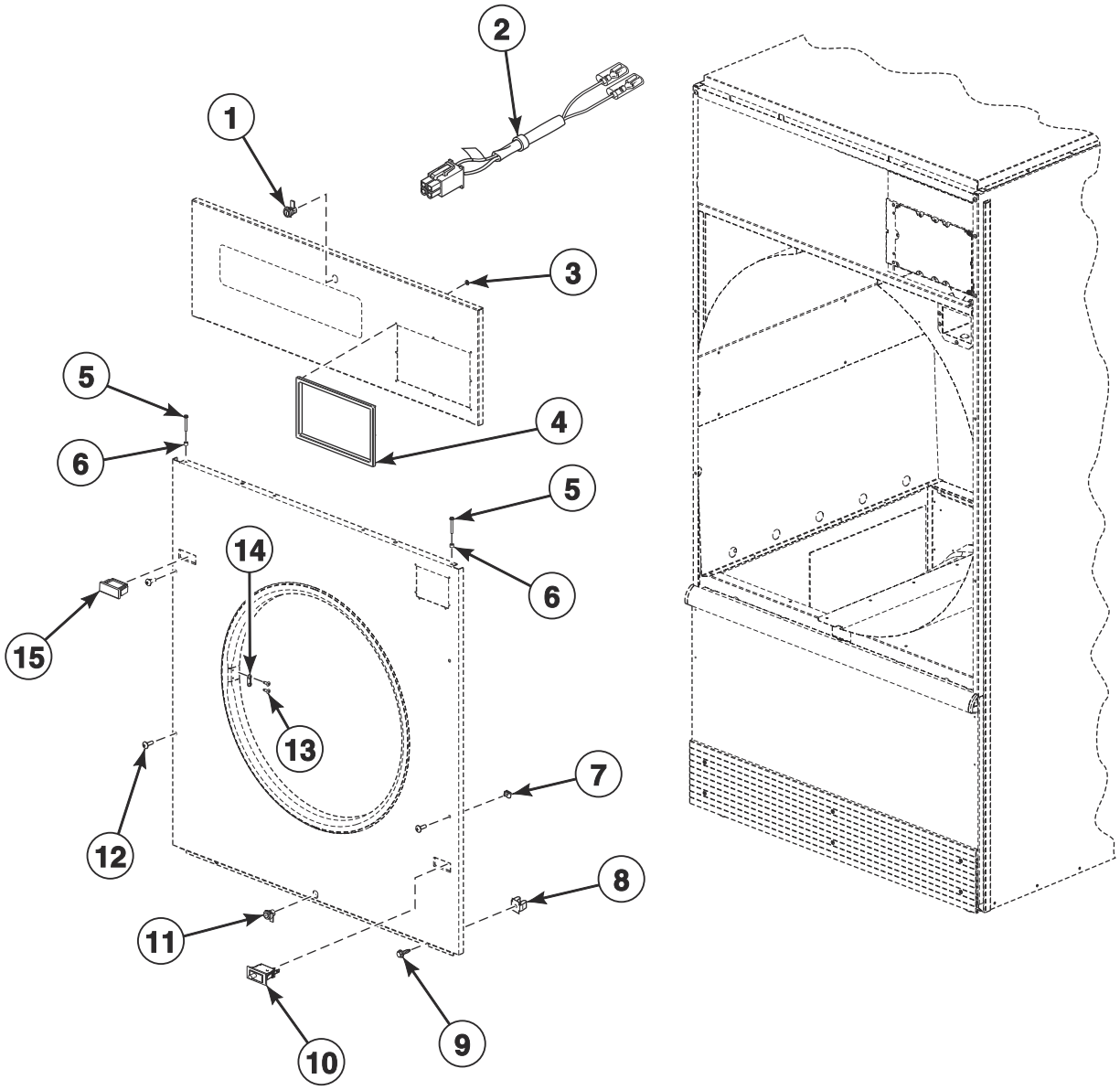

© Copyright, Alliance Laundry Systems LLC – DO NOT COPY or TRANSMIT

Cabinet Front Components

REF	PART NO.	DESCRIPTION	COMMENTS
	M4379P4	Tumbler Dolly Kit	
	D511476	Jumper Harness	Card reader present
	44366201	Door Switch Harness	
	44334103	Bypass Harness	Card and central pay
	70482901	Door Catch Kit	
1	70733701	Lock, Key and Nut Kit	RL001 key code; Black; Control panel; Optional if same key is to be used for control lock
	70155601	Key	RL001
2	44334101	Coin Vault Switch Harness	
3	M400977	Nut	8 required per control trim
4	70529401	Control Trim	H models; Gray
	44016401	Control Trim	P models; Black
5	70275801	Screw	4 required
6	56079	Panel Locator	2 required
7	70030401	Nut	
8	70030501	Expansion Clip	
9	M411072	Screw	4 required; Front panel; Bottom
10	70413301	Pushbutton Switch	Door switch
11	70733701	Lock, Key and Nut Kit	RL001 key code; Black; Lint panel; Optional if same key is to be used for control lock
	70155601	Key	RL001
	70722301	Lock, Key and Nut Kit	RL002 key code; Black; Lint panel; Standard coin and card models
	70155602	Key	RL002
12	70033502	Screw	2 required for stainless steel panels in addition to 2 of 70182601 Screw
	70182601	Screw	2 required for stainless steel panels in addition to 2 of 70033502 Screw; 4 required for painted panels
13	44166601	Pop Rivet	2 per door latch
14	M401223	Door Latch	2 required
15	44057801W	Switch Hole Plug	White
	44057801B	Switch Hole Plug	Black
	44057801LG	Switch Hole Plug	Light gray

© Copyright, Alliance Laundry Systems LLC – DO NOT COPY or TRANSMIT

Control Panels and Nameplates

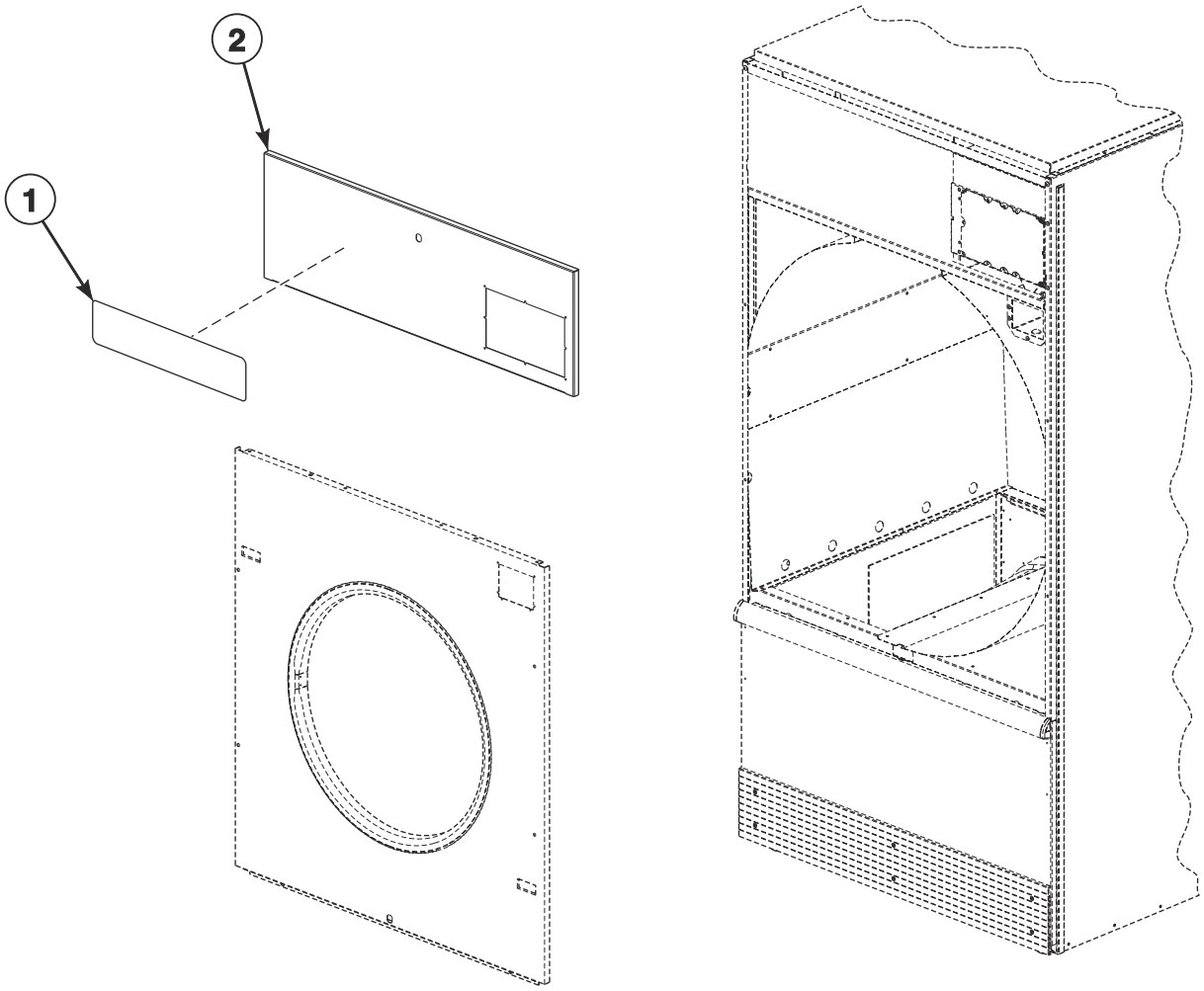

TMB3891P

© Copyright, Alliance Laundry Systems LLC – DO NOT COPY or TRANSMIT

Control Panels and Nameplates

REF	PART NO.	DESCRIPTION	COMMENTS
1	F8688901	Nameplate	S models
	F8688001	Nameplate	H models
	F8443106	Nameplate	U models
	567293	Nameplate	B models
	567887	Nameplate	P models
	70410201	Nameplate Overlay	G models; OPL
	44130301	Nameplate Overlay	K models; OPL
	562738	Label	B, P, and S models; Softwash
2	44040015W	Control Panel	B, G, K and U models; Models with D, F, N and W in 7th position
	44040013	Control Panel	B, G, K and U models; Stainless steel; Models with D, F, N and W in 7th position
	44000130W	Control Panel	H, N and P models; Models with F, N and W in 7th position
	44000125	Control Panel	H, N and P models; Stainless steel; Models with F, N and W in 7th position
	44040015LG	Control Panel	U models; Light gray; Models with D, F, N and W in 7th position
	44000130DG	Control Panel	P models; Dark gray; Models with F, N and W in 7th position
	44344001	Control Panel	B, H, P and S models; Stainless steel; Coin and card; Models with V in 7th position
	44344002	Control Panel	B, H, P and S models; Stainless steel; Central pay and OPL; Models with V in 7th position
	44388701	Control Panel	S models; Stainless steel; Coin and central pay; Models with N and W in 7th position
	44388702	Control Panel	S models; Stainless steel; Card; Models with N and W in 7th position
	44388603	Control Panel	S models; Stainless steel; OPL; Models with F, N and W in 7th position
	44388703W	Control Panel	S models; Coin and central pay; Models with N and W in 7th position
	44388704W	Control Panel	S models; Card; Models with N and W in 7th position
	44388606W	Control Panel	S models; OPL; Models with F, N and W in 7th position

© Copyright, Alliance Laundry Systems LLC – DO NOT COPY or TRANSMIT

Front Panel Assemblies

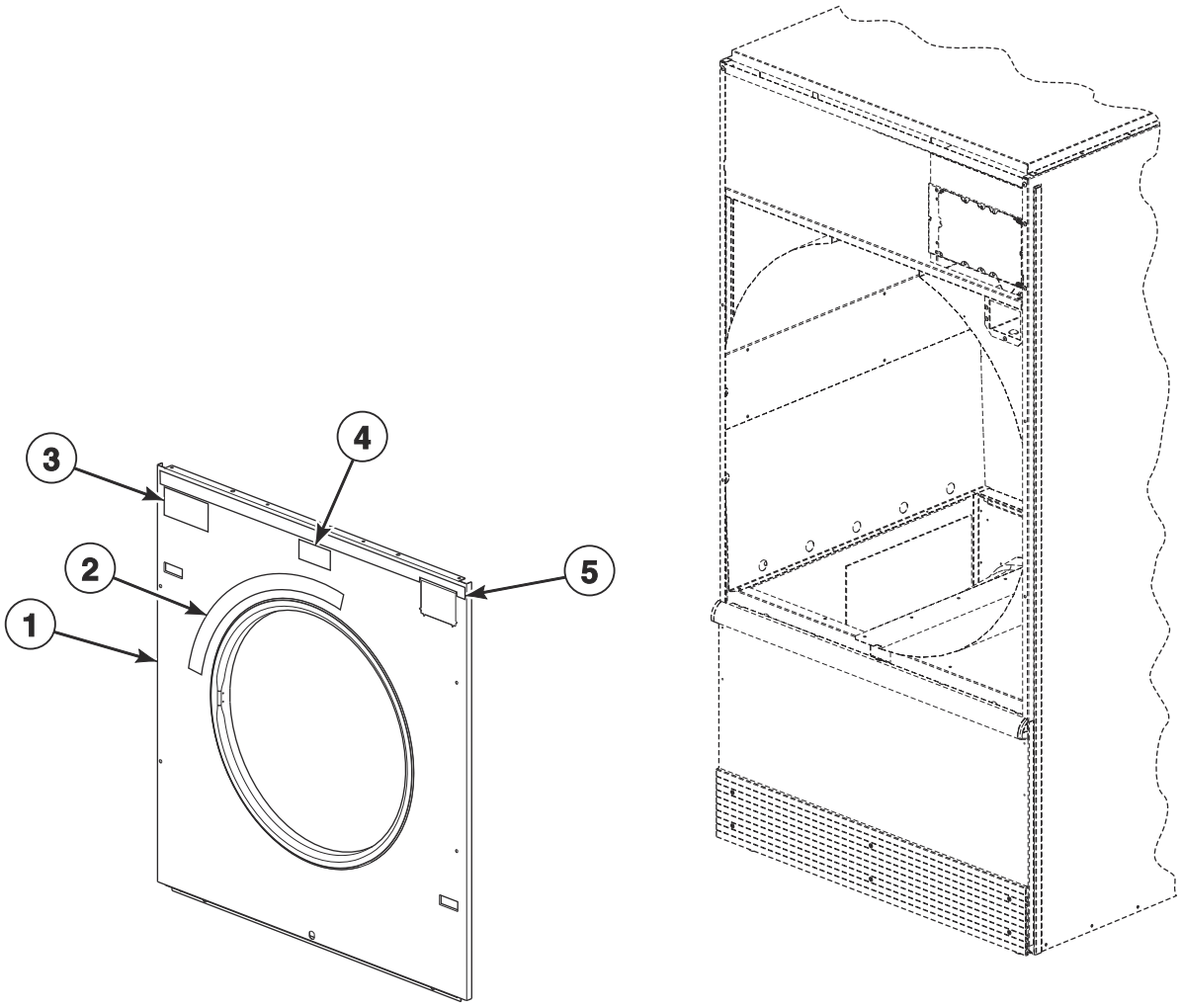

TMB3892P

© Copyright, Alliance Laundry Systems LLC – DO NOT COPY or TRANSMIT

Front Panel Assemblies

REF	PART NO.	DESCRIPTION	COMMENTS
1	44052533W	Front Panel	All models except H models; Coin; Models with N and W in 7th position
	44052532	Front Panel	All models except U models; Stainless steel; Coin; Models with N and W in 7th position
	44346305	Front Panel	B, H, P and S models; Stainless steel; Coin; Models with V in 7th position
	44052533DG	Front Panel	P models; Dark gray; Coin; Models with N and W in 7th position
	44052536W	Front Panel	All models except H models; Card, central pay and FOB; Models with N and W in 7th position
	44052535	Front Panel	All models except U models; Stainless steel; Card, central pay and FOB; Models with N and W in 7th position
	44346306	Front Panel	B, H, P and S models; Stainless steel; Card, central pay and FOB; Models with V in 7th position
	44052536DG	Front Panel	P models; Dark gray; Card, central pay and FOB; Models with N and W in 7th position
	44052542W	Front Panel	With e-stop; OPL; Models with D, F, N and W in 7th position
	44052541	Front Panel	All models except U models; Stainless steel; With e-stop; OPL; Models with D, F, N and W in 7th position
	44346308	Front Panel	B, H, P and S models; Stainless steel; With e-stop; OPL; Models with V in 7th position
	44052541	Front Panel	U models; Stainless steel; With e-stop; OPL; Models with D, F, N and W in 7th position
	44052542LG	Front Panel	U models; Light gray; With e-stop; OPL
	44052542DG	Front Panel	P models; Dark gray; With e-stop; OPL; Models with F, N and W in 7th position
	44052539W	Front Panel	Without e-stop; OPL; Models with D, F, N and W in 7th position
	44052538	Front Panel	All models except U models; Stainless steel; Without e-stop; OPL; Models with D, F, N and W in 7th position
	44346307	Front Panel	B, H, P and S models; Stainless steel; Without e-stop; OPL; Models with V in 7th position
	44052538	Front Panel	U models; Stainless steel; Without e-stop; OPL; Models with D, F, N and W in 7th position
	44052539LG	Front Panel	U models; Light gray; Without e-stop; OPL
	44052539DG	Front Panel	P models; Dark gray; Without e-stop; OPL; Models with F, N and W in 7th position
2	70534401	Warning Label	English
	70534402	Warning Label	French
	70534405	Warning Label	Colombian Spanish
	70534400	Label Kit	Warning; IEC models
3	70537101	Label	G and K models; F.S.S.
	44190901	Label	P models; Safe Tech
	70537001	Label	B, H, M, N, S and U models; C.A.R.E.
	70414001	Label	G and K models; ExpressDry
4	70472801	Label	U models
5	70399402	Access Panel Trim	G and K models

© Copyright, Alliance Laundry Systems LLC – DO NOT COPY or TRANSMIT

Lower Cabinet Front Components

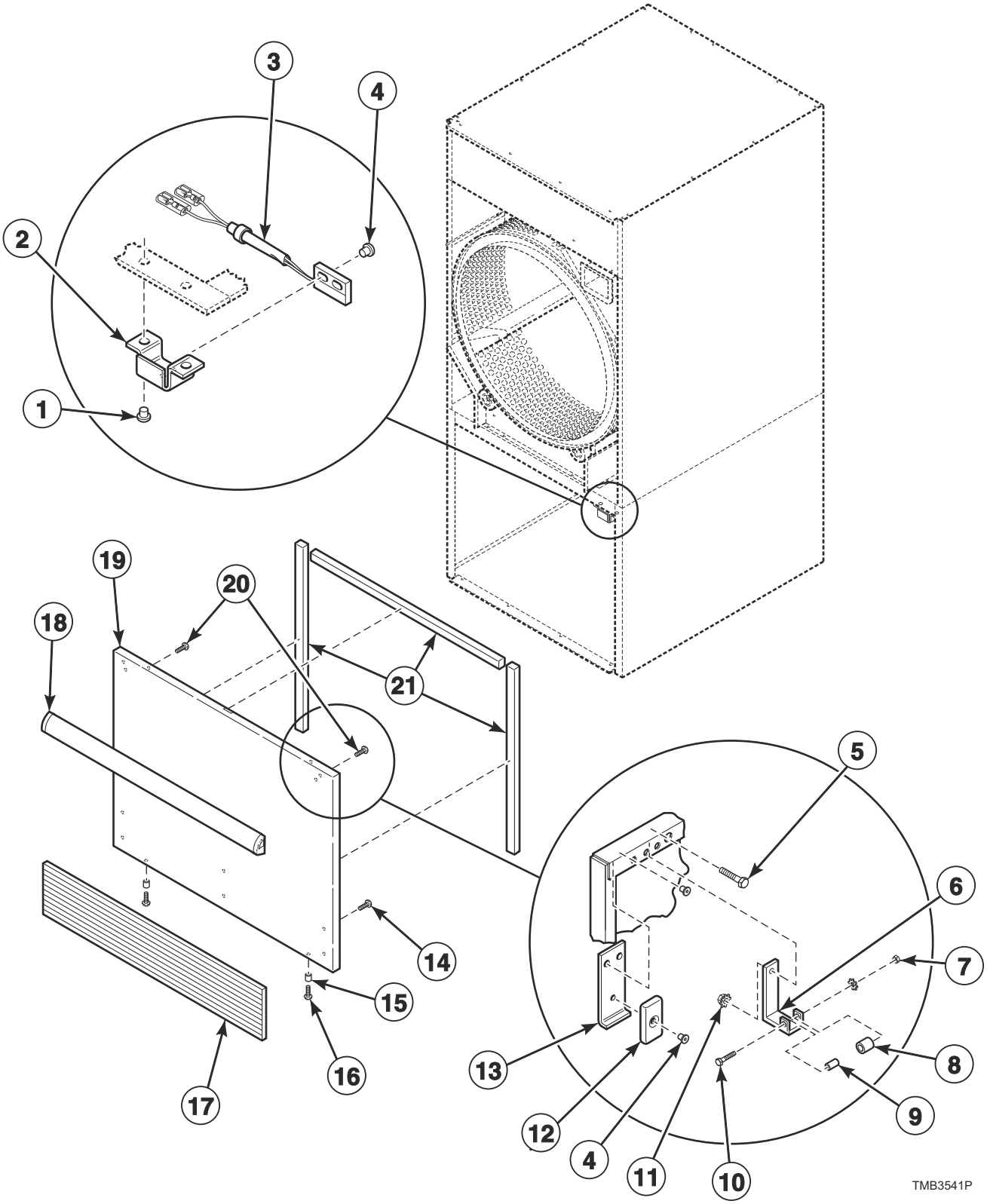

© Copyright, Alliance Laundry Systems LLC – DO NOT COPY or TRANSMIT

Lower Cabinet Front Components

REF	PART NO.	DESCRIPTION	COMMENTS
	44362702	Lint Door Switch Harness	
	70404001	Roller Bracket Assembly	Includes items 6-10
1	70058501	Pop Rivet	
2	44296101	Switch Bracket	
3	F8066804	Reed Switch Assembly	
4	70743501	Rivet	
5	70132301	Screw	Attaching roller catch
6	70030301	Roller Catch Arm	
7	23951	Nut	
8	70297601	Roller Catch Wheel	
9	70030201	Roller Catch Spacer	
10	70072801	Screw	
11	51236	Nut	Attaching roller catch
12	70343101	Magnet	
13	44290501	Magnet Bracket	
14	70126301	Pop Rivet	For attaching kickplate; Black; 6 required
	70126401	Pop Rivet	For attaching kickplate; Gray; 6 required
15	56079	Panel Locator	
16	39733	Screw	
17	70117619	Kickplate	H and U models; Gray
	70117607	Kickplate	All models except H models; Black
18	70154405P	Handle and Caps Assembly	B, M, N and S models; Black; Includes endcaps
	70407210	Handle Bumper	P models; Silver
	70154415	Handle and Caps Assembly	H and U models; Gray; Includes endcaps
	70407202	Handle Bumper	G and K models; Black and blue; Does not include endcaps
19	44293603W	Lint Panel	With kickplate (order separately)
	44293604DG	Lint Panel	P models; Dark gray; No kickplate
	44293603LG	Lint Panel	U models; Light gray; With kickplate (order separately)
	44293602	Lint Panel	All models except P models; Stainless steel; With kickplate (order separately)
	44293605	Lint Panel	Stainless steel; No kickplate
	44293604W	Lint Panel	No kickplate
20	430757	Screw	
21	70289101P	Gasket	Sold per foot

© Copyright, Alliance Laundry Systems LLC – DO NOT COPY or TRANSMIT

Lint Panel Components

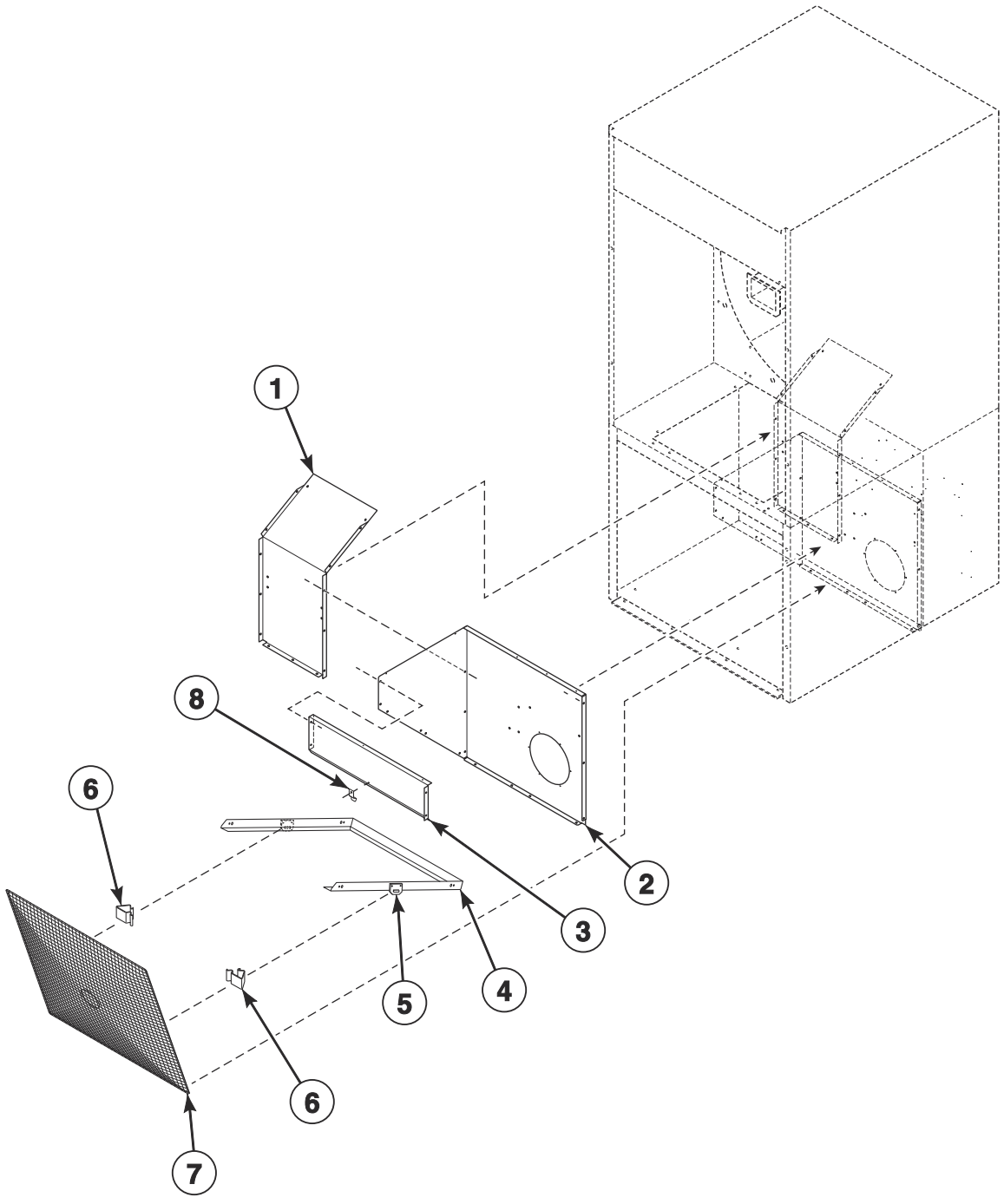

TMB3637P

© Copyright, Alliance Laundry Systems LLC – DO NOT COPY or TRANSMIT

Lint Panel Components

REF	PART NO.	DESCRIPTION	COMMENTS
1	44298102	Lint Panel	Left
2	44300901	Lint Panel	Right
3	44298901	Lint Screen Top Rail	
4	44325301	Lint Bracket	
5	44140202	Lint Clip Bracket	2 required
6	35865	Hold-Down Clip	2 required
7	44063601	Lint Screen	
8	H96418413	Lint Screen Clip	

© Copyright, Alliance Laundry Systems LLC – DO NOT COPY or TRANSMIT

Cabinet Components

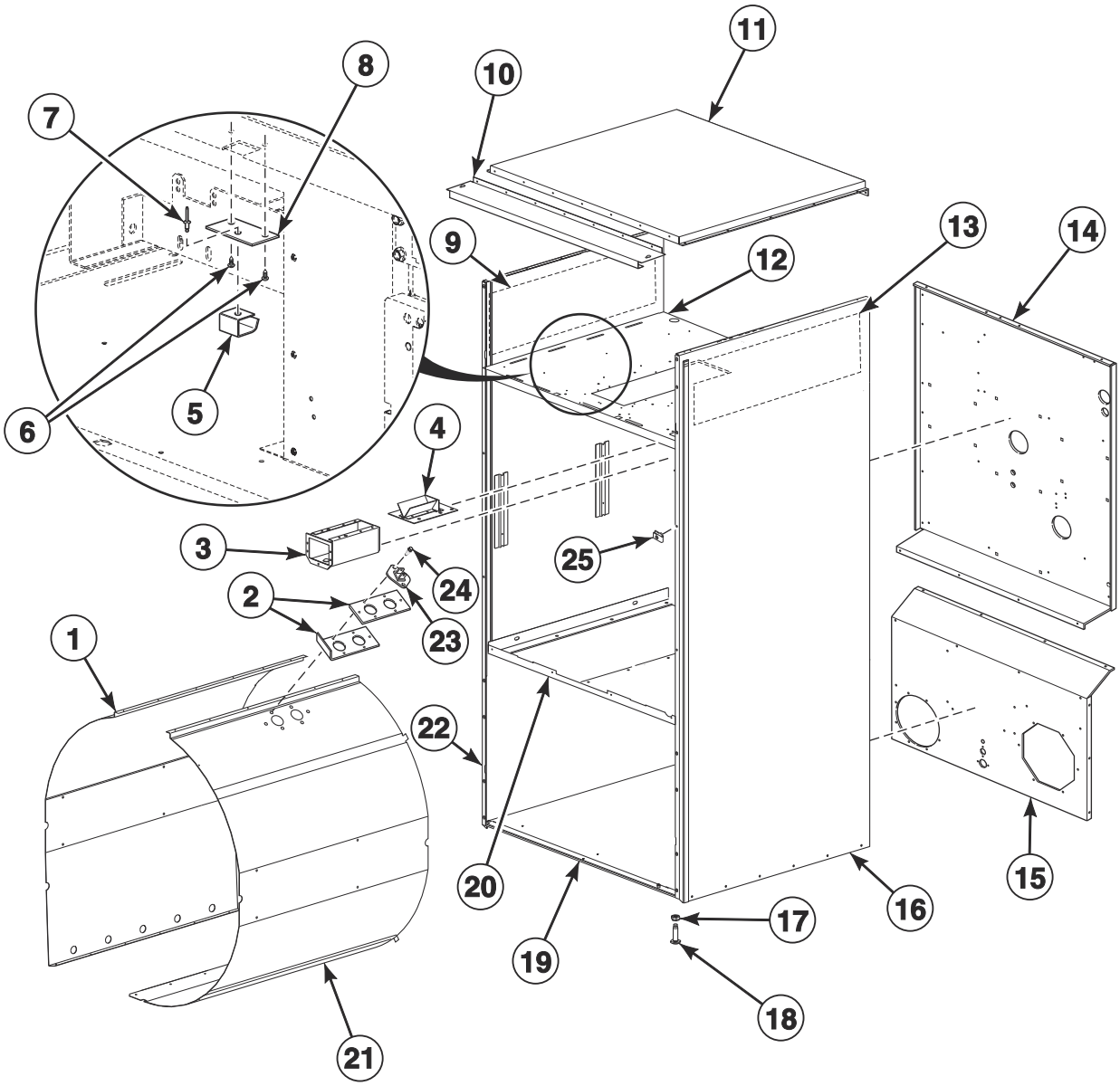

TMB3998P

© Copyright, Alliance Laundry Systems LLC – DO NOT COPY or TRANSMIT

Cabinet Components

REF	PART NO.	DESCRIPTION	COMMENTS
	298P4P	Spray Paint	White
	122P4P	Porcelain Touch-Up Paint	White
	70058501	Pop Rivet	Use with items 16 and 22
	430497	Screw	Use with items 16 and 22
	205655	Leveling Leg Locknut Wrench	Use with item 17
1	44304601	Baffle	Left
2	44068101	Thermistor Plate	
	44068102	Thermistor Plate	Use as a shim
3	70529501	Coin Vault Assembly	
	70529502	Coin Vault and Emergency Stop Mount Assembly	Models with emergency stop
	F160673P	Coin Box	Optional equipment; Includes lock and key
4	70296401	Coin Chute Assembly	Wide
5	431318	Control Door Latch	
6	431287	Screw	
7	M400003	Pop Rivet	
8	44003201	Latch Mounting Bracket	
9	44150102	Insulation	
10	44368201	Top Panel Bracket	Gas and electric models with D, F, N and W in the 7th position
11	44135001P	Top Cover Pan	Gas and electric models with D, F, N and W in the 7th position
	44368801	Top Cover	Steam models with D, F, N and W in the 7th position
	44346201	Top Panel	Gas models with V in the 7th position
	44346202	Top Panel	Electric models with V in the 7th position
12	44304101	Top Pan	Models with D, F, N and W in the 7th position
	44345101	Top Pan	Gas models with V in the 7th position
	44352401	Top Pan	Electric models with V in the 7th position
13	44150103	Insulation	
14	44376901	Upper Rear Panel	
15	44380501	Lower Rear Panel	
16	44367602DG	Side Panel	B and P models; Right; Dark gray
	44367602LG	Side Panel	U models; Right; Light gray
	44367602W	Side Panel	Right
17	21899	Nut	Right
18	70247701	Screw	Leveling leg
19	44304301	Bottom Pan	
20	44304201	Center Pan	
21	44304702	Baffle	Right
	44304701	Baffle	Right with fire suppression system
22	44367502DG	Side Panel	B and P models; Left; Dark gray
	44367502LG	Side Panel	U models; Left; Light gray
	44367502W	Side Panel	Left
23	44064701	Thermistor	
24	51780	Screw	
25	70030401	Nut	

© Copyright, Alliance Laundry Systems LLC – DO NOT COPY or TRANSMIT

Rear Panel and Belt Guard Components

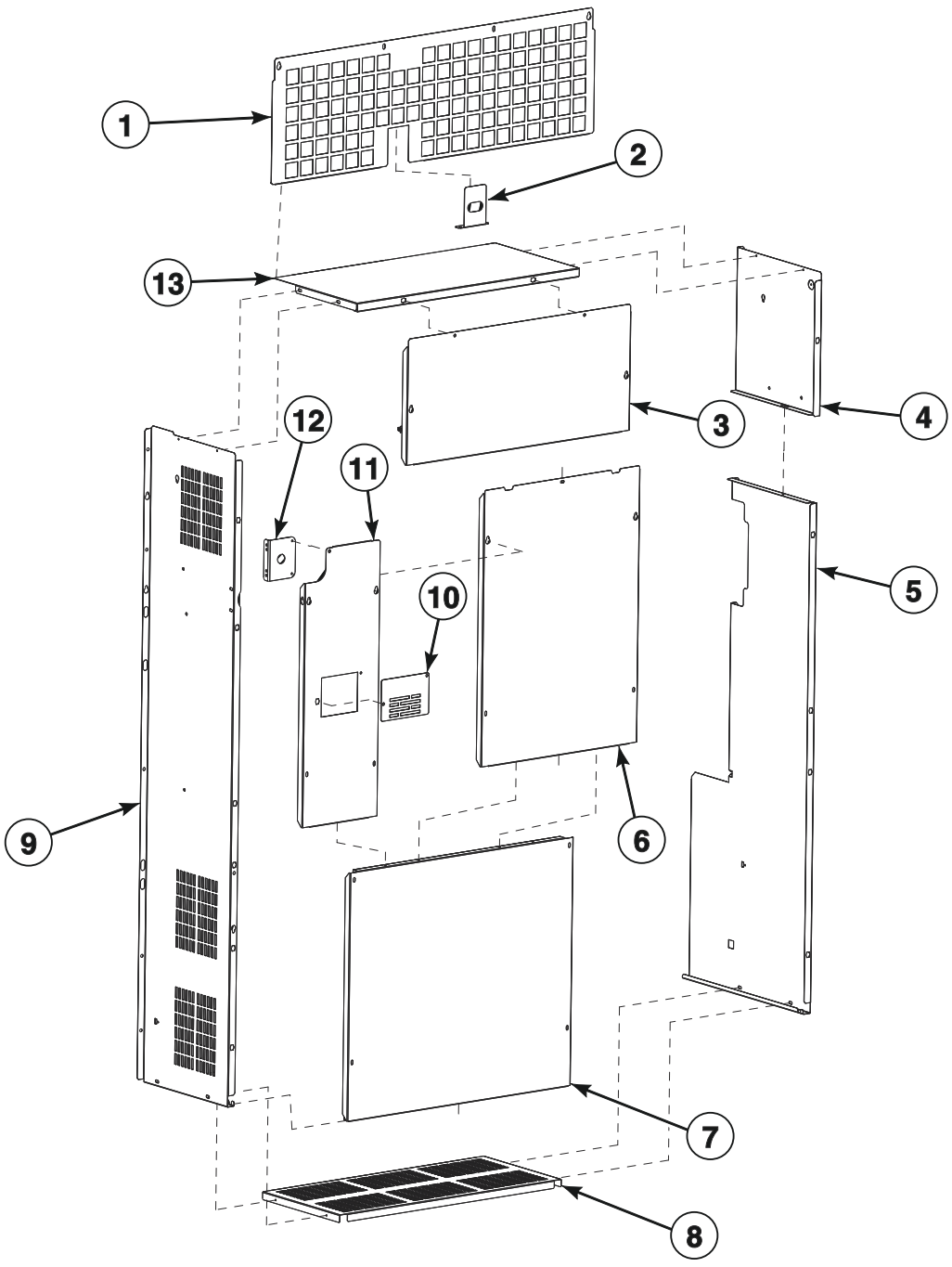

TMB3894P

© Copyright, Alliance Laundry Systems LLC – DO NOT COPY or TRANSMIT

Rear Panel and Belt Guard Components

REF	PART NO.	DESCRIPTION	COMMENTS
	F8206901	Screw	#10-16x5/8; Use with items 3, 6, 7 and 11; Used on item 10 with 70058501 Pop Rivet
	430497	Screw	#10-16x3/8; Use with items 1, 2, 4, 5, 8, 9, 12 and 13
1	44300301	Stove Grate	Gas models
	44300302	Stove Grate	Steam models
	44364801	Stove Grate	Electric models
2	44327601	Pipe Bracket	Gas models with D, F, N and W in the 7th position
	44327603	Pipe Bracket	Gas models with V in the 7th position
	44376801	Steam Harness Bracket	Steam models
3	44363801	Control Tray Guard	
4	44374301	Upper Guard	Left
5	44363501	Lower Guard	Left
6	44373501	Rear Guard	Belt
7	44363901	Lower Guard	Rear
	44363902	Lower Guard	Rear with fire suppression system
8	44377301	Guard	Bottom
9	44363601	Guard	Right
10	70202501	Drive Access Cover	
11	44373401	Rear Guard	Inverter
12	70615501	Conduit Plate	Gas and steam models
	70615502	Conduit Plate	Electric models
13	44364001	Top Guard	Gas and steam models
	44364002	Top Guard	Electric models

© Copyright, Alliance Laundry Systems LLC – DO NOT COPY or TRANSMIT

Door Assemblies

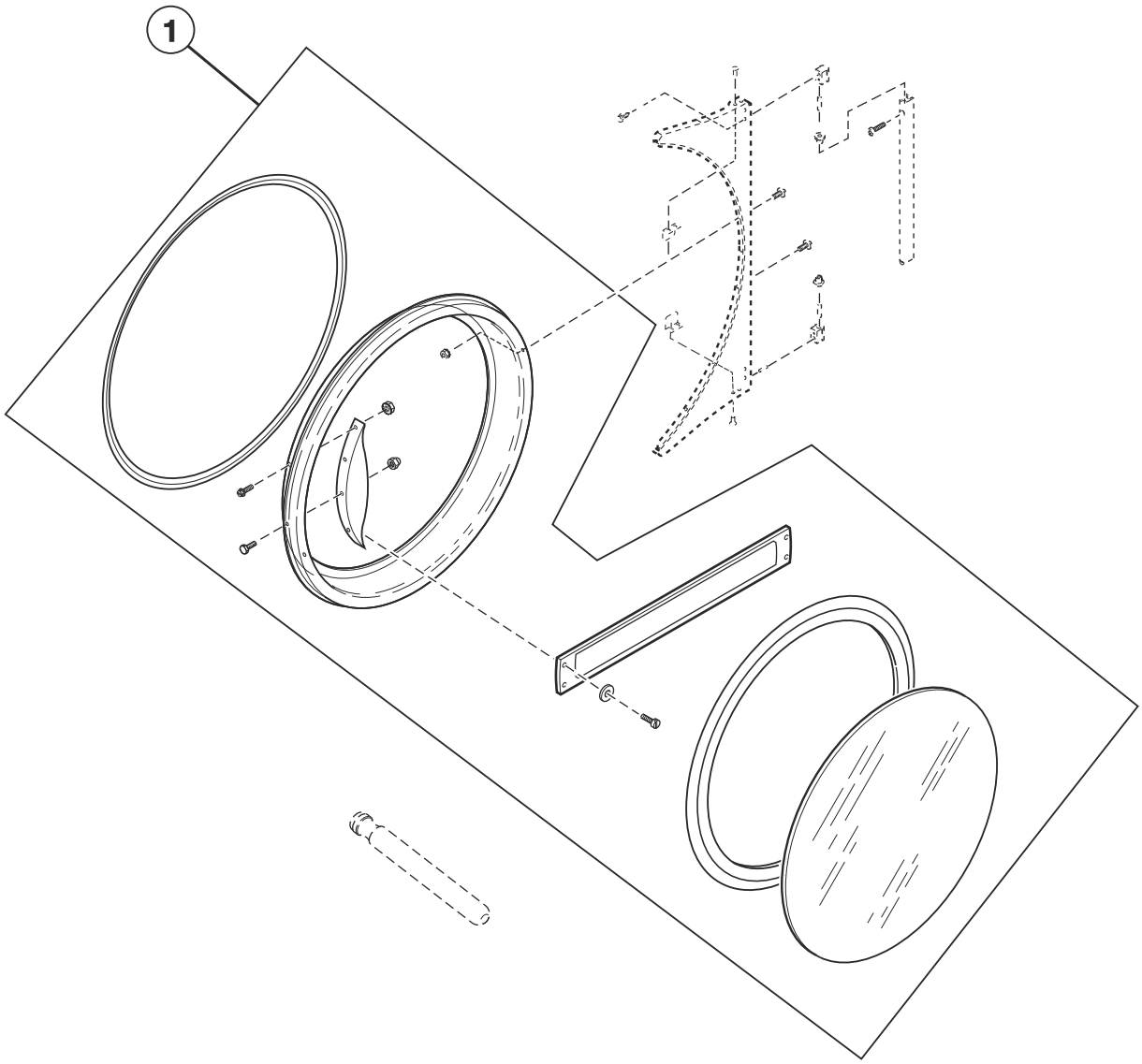

TMB3856P

© Copyright, Alliance Laundry Systems LLC – DO NOT COPY or TRANSMIT

Door Assemblies

REF	PART NO.	DESCRIPTION	COMMENTS
1	44354701	Door Assembly	M and S models; Stainless steel
	44354702P	Door Assembly	M and S models; Chrome; Models through Serial No. 2108 with 6 in 5th position of Serial No.; Models through Serial No. 2306 with 0 in 5th position of Serial No.
	44389101	Door Assembly	M and S models; Mirror polish; Models starting Serial No. 2109 with 6 in 5th position of Serial No.; Models starting Serial No. 2307 with 0 in 5th position of Serial No.
	44354703	Door Assembly	U models; Stainless steel
	44354704	Door Assembly	U models; Chrome; Models through Serial No. 2108 with 6 in 5th position of Serial No.; Models through Serial No. 2306 with 0 in 5th position of Serial No.
	44389104	Door Assembly	U models; Mirror polish; Models starting Serial No. 2109 with 6 in 5th position of Serial No.; Models starting Serial No. 2307 with 0 in 5th position of Serial No.
	44354705	Door Assembly	H models; Stainless steel
	44354707	Door Assembly	H models; Stainless steel with green trim
	44354706	Door Assembly	H models; Chrome; Models through Serial No. 2108 with 6 in 5th position of Serial No.; Models through Serial No. 2306 with 0 in 5th position of Serial No.
	44389102	Door Assembly	H models; Mirror polish; Models starting Serial No. 2109 with 6 in 5th position of Serial No.; Models starting Serial No. 2307 with 0 in 5th position of Serial No.
	44354708	Door Assembly	H models; Chrome with green trim; Models through Serial No. 2108 with 6 in 5th position of Serial No.; Models through Serial No. 2306 with 0 in 5th position of Serial No.
	44389103	Door Assembly	H models; Mirror polish with green trim; Models starting Serial No. 2109 with 6 in 5th position of Serial No.; Models starting Serial No. 2307 with 0 in 5th position of Serial No.
	44354711B	Door Assembly	G and K models; Includes handle
	44354709	Door Assembly	B, N and P models; Black
	44354710LG	Door Assembly	P models; Light gray

© Copyright, Alliance Laundry Systems LLC – DO NOT COPY or TRANSMIT

Door Components

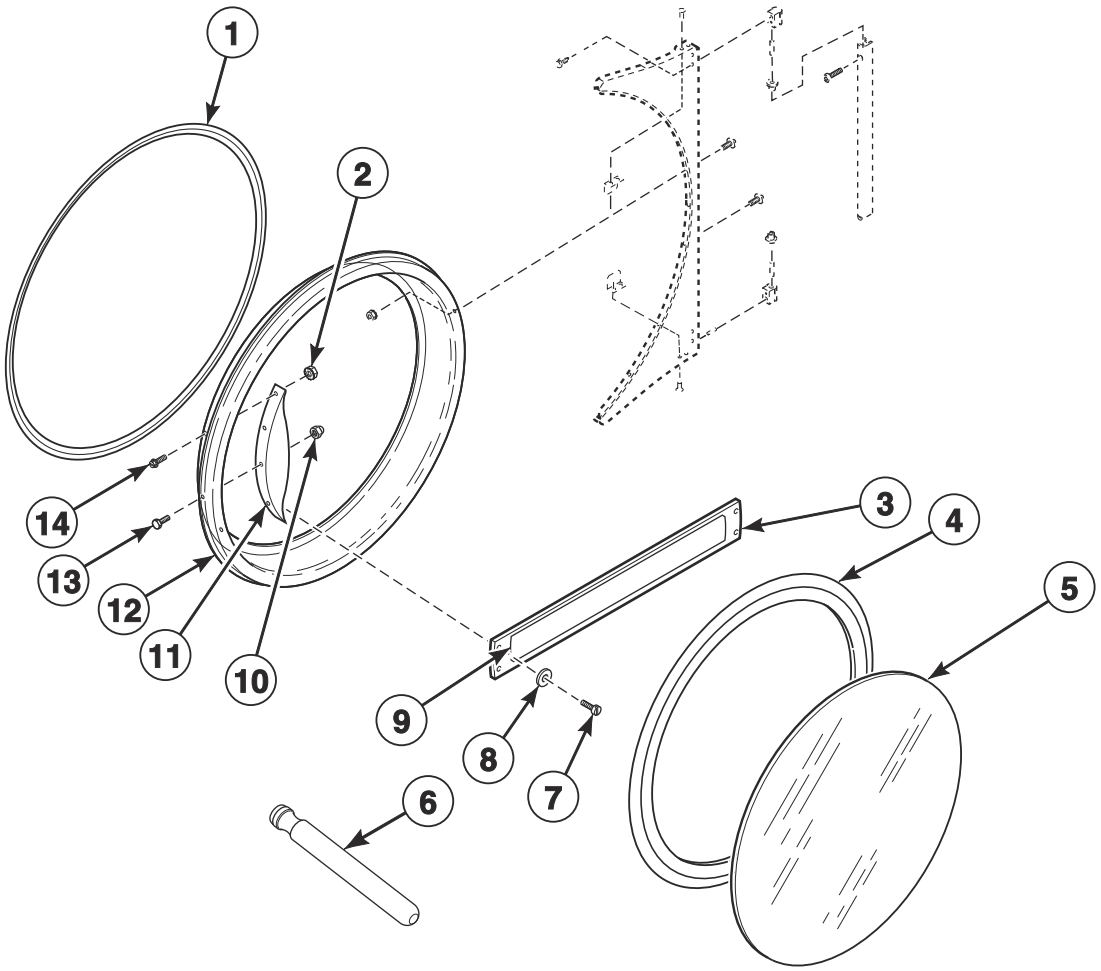

TMB3856PA

© Copyright, Alliance Laundry Systems LLC – DO NOT COPY or TRANSMIT

Door Components

REF	PART NO.	DESCRIPTION	COMMENTS
	70650401	Door Glass Label	H models
	70707701	Door Glass Label	S models
	70707501	Max Fill Line Label	
1	70296802	Door Ring Gasket	H models with chrome handle
	44008201P	Door Ring Gasket	
2	44088001	Nut	B, H, M, N and S models; 4 required
3	70399501B	Handle Bar	G and K models
4	70211902P	Door Seal Kit	Use Loctite 414 for seal
5	44008405	Door Glass	H models; Green trim
	44008401P	Door Glass	
6	M4221P4	Door Glass Installation Tool	
7	70412601	Pop Rivet	G and K models; Attaches door handle to door ring
8	70409301	Washer	G and K models
9	44144401	Nameplate Overlay	K models
	70411401	Nameplate Overlay	G models
10	M414215	Nut	For door strike; Mounts between door strike screw and door handle
11	44007901	Door Handle	B, M, N, P and S models
	44263801	Door Handle	U models; Use 901620 Screw, 800465 Washer, 803871 Screw and 44088001 Nut to attach; 90-degree chrome pull handle
	44370601	Door Handle	H models
12	44354801	Door Ring Assembly	H, M and S models; Stainless steel
	44354802	Door Ring Assembly	H, M and S models; Chrome; Models through Serial No. 2108 with 6 in 5th position of Serial No.; Models through Serial No. 2306 with 0 in 5th position of Serial No.
	70689103	Door Ring Assembly	H, M and S models; Mirror polish; Models starting Serial No. 2109 with 6 in 5th position of Serial No.; Models starting Serial No. 2307 with 0 in 5th position of Serial No.
	44354803	Door Ring Assembly	U models
	44354804	Door Ring Assembly	U models; Chrome; Models through Serial No. 2108 with 6 in 5th position of Serial No.; Models through Serial No. 2306 with 0 in 5th position of Serial No.
	70689104	Door Ring Assembly	U models; Mirror polish; Models starting Serial No. 2109 with 6 in 5th position of Serial No.; Models starting Serial No. 2307 with 0 in 5th position of Serial No.
	44354808LG	Door Ring Assembly	P models; Light gray
	44354809B	Door Ring Assembly	G and K models
	44354807B	Door Ring Assembly	B, N and P models
13	M400661	Screw	Door Strike
14	70442101	Screw	B, H, M, N, P and S models; 4 required

© Copyright, Alliance Laundry Systems LLC – DO NOT COPY or TRANSMIT

Hinge Components

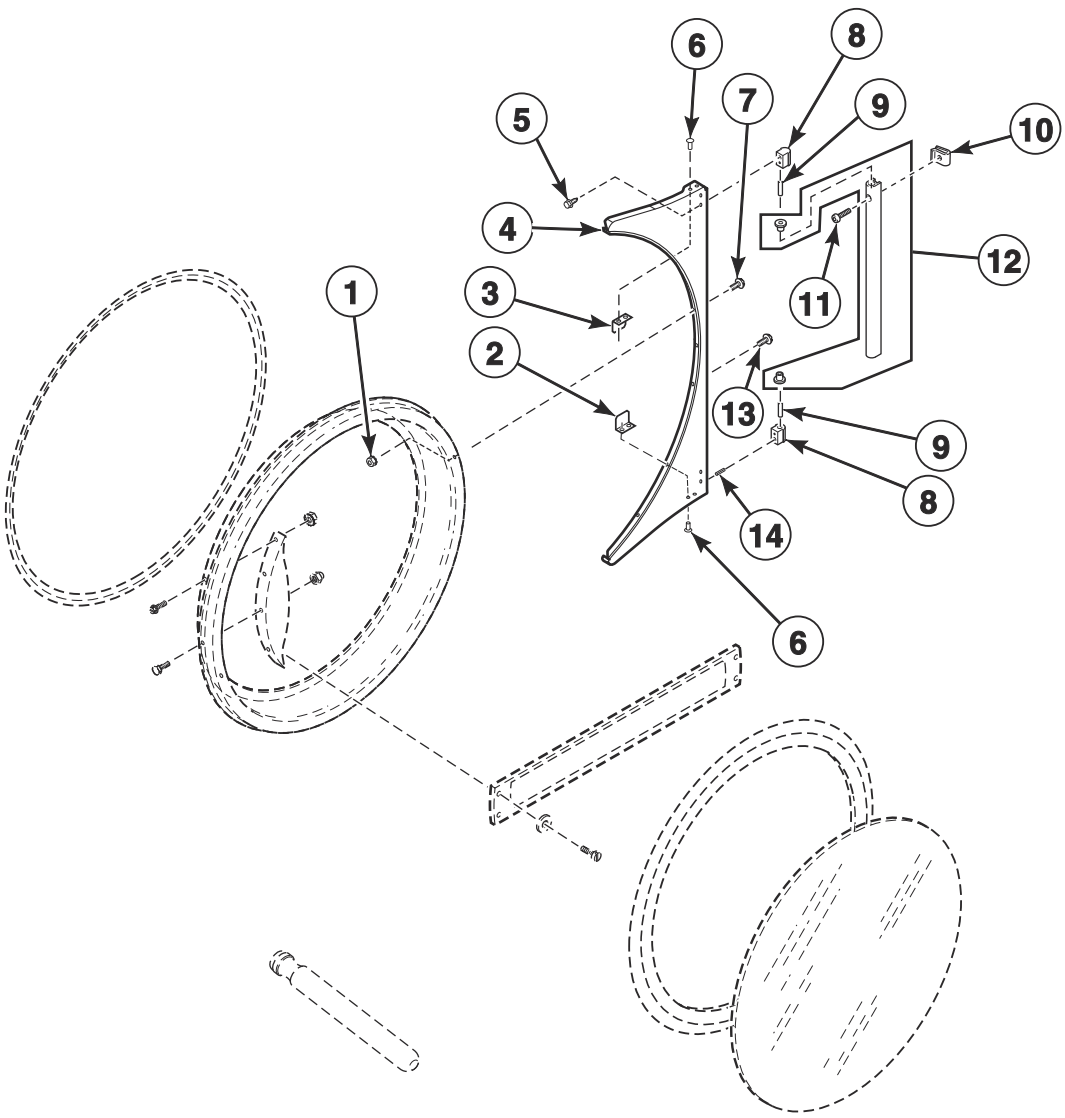

TMB3997P

© Copyright, Alliance Laundry Systems LLC – DO NOT COPY or TRANSMIT

Hinge Components

REF	PART NO.	DESCRIPTION	COMMENTS
1	44088001	Nut	
2	70727901	Door Switch Actuator	Bottom
3	70532105	Door Switch Actuator	Top
4	70596614B	Door Hinge Assembly	Black; B, G, K and P models
	70596614W	Door Hinge Assembly	B, H, M, N, S and U models
	70596603	Door Hinge Assembly	H and S models; Chrome; Models through Serial No. 2108 with 6 in 5th position of Serial No.; Models through Serial No. 2306 with 0 in 5th position of Serial No.
	70596608	Door Hinge Assembly	H and S models; Mirror polish; Models starting Serial No. 2109 with 6 in 5th position of Serial No.; Models starting Serial No. 2307 with 0 in 5th position of Serial No.
	70596604	Door Hinge Assembly	H, M, N, S and U models; Stainless steel
	70596614LG	Door Hinge Assembly	P and U models; Light gray
5	70576101	Screw	3 required
6	70058501	Pop Rivet	2 required
7	44349101	Screw	6 required
8	M4773P3	Hinge Cam Kit	Black; B, G, K and P models
	M4772P3	Hinge Cam Kit	H, M, N, P, S and U models
	70622401	Hinge Cam Kit	H and S models; Chrome
9	70071401	Pin	
10	70030401	Nut	
11	70407301	Screw	Black; B, G, K and P models
	70033502	Screw	H, M, N, P, S and U models
12	70597603	Door Hinge Lug Assembly	Black; B, G, K and P models
	70597601	Door Hinge Lug Assembly	H, M, N, P, S and U models
	70597602	Door Hinge Lug Assembly	H and S models; Chrome
13	70607603	Screw	
14	70436301	Screw	

© Copyright, Alliance Laundry Systems LLC – DO NOT COPY or TRANSMIT

Cylinder and Trunnion Components

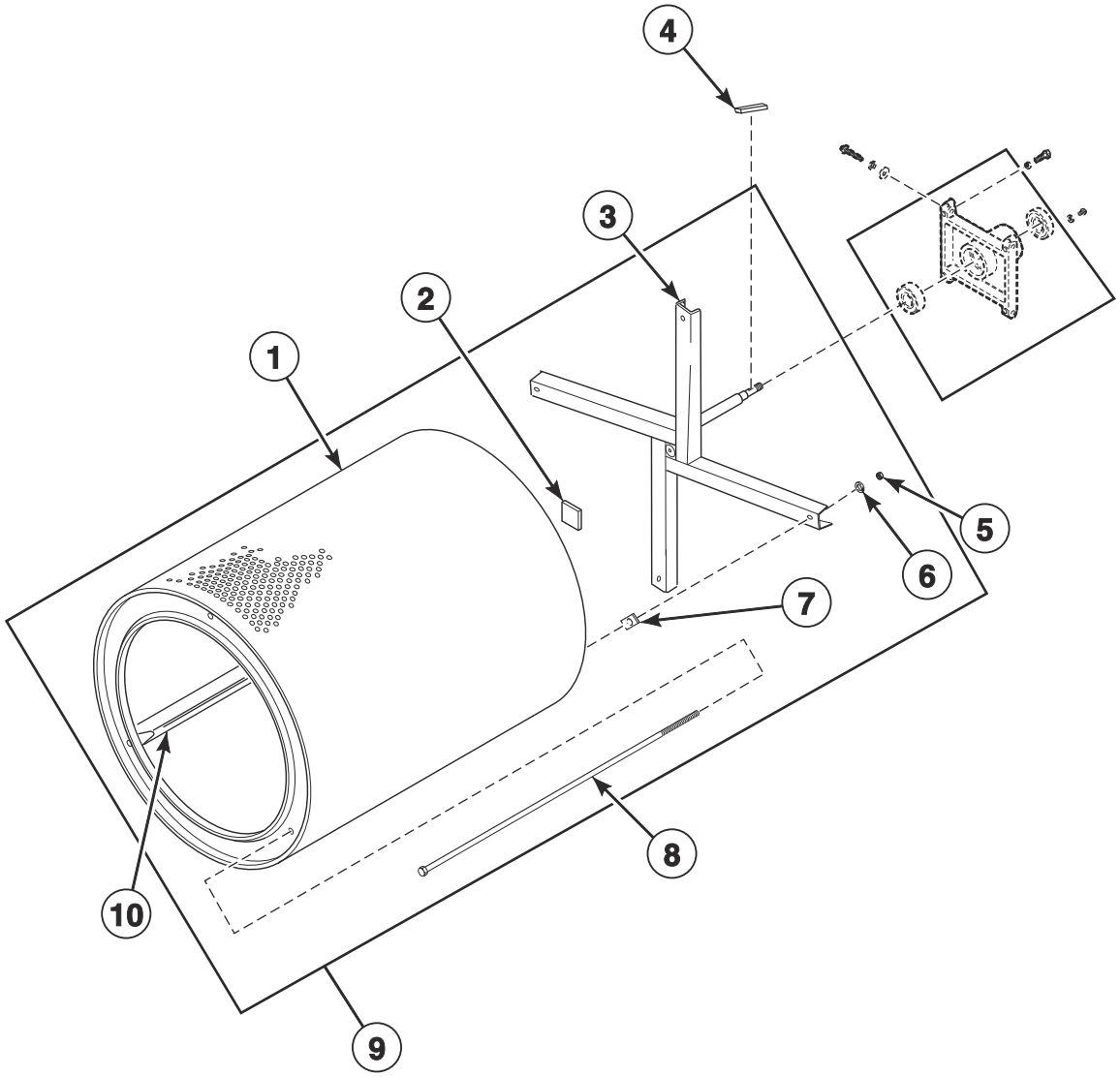

TMB3796P

© Copyright, Alliance Laundry Systems LLC – DO NOT COPY or TRANSMIT

Cylinder and Trunnion Components

REF	PART NO.	DESCRIPTION	COMMENTS
1	44057001P	Cylinder Kit	Galvanized; Non-moisture sensing
	44196301	Cylinder Assembly	Galvanized; Moisture sensing
	44057101P	Cylinder Kit	Stainless steel; Non-moisture sensing
	44196302	Cylinder Assembly	Stainless steel; Moisture sensing
	44130802	Cylinder Assembly	G and K models; Non-moisture sensing
	44196303	Cylinder Assembly	G and K models; Moisture sensing
2	M402144	Felt Pad	
3	44208001P	Trunnion Assembly	Spider; Non-moisture sensing
	44207901P	Trunnion Assembly	Moisture sensing
4	M400008	Key	Half moon
5	M404993	Nut	
6	M400015	Washer	4 required
7	M401402	Spacer	Adjustment between cylinder and trunnion
8	M401411	Rib Rod	
9	44195601	Cylinder and Trunnion Assembly	Galvanized; Non-moisture sensing
	44195602	Cylinder and Trunnion Assembly	Stainless steel; Non-moisture sensing
	44195605P	Cylinder and Trunnion Assembly	Galvanized; Moisture sensing
	44195606	Cylinder and Trunnion Assembly	Stainless steel; Moisture sensing
	44195603	Cylinder and Trunnion Assembly	G and K models; Non-moisture sensing
	44195607	Cylinder and Trunnion Assembly	G and K models; Moisture sensing
10	44191201	Cylinder Rib Assembly	Moisture sensing
	M403002	Cylinder Rib	Non-moisture sensing; Galvanized
	44076201	Cylinder Rib	Non-moisture sensing; Stainless steel

© Copyright, Alliance Laundry Systems LLC – DO NOT COPY or TRANSMIT

Bearing Components

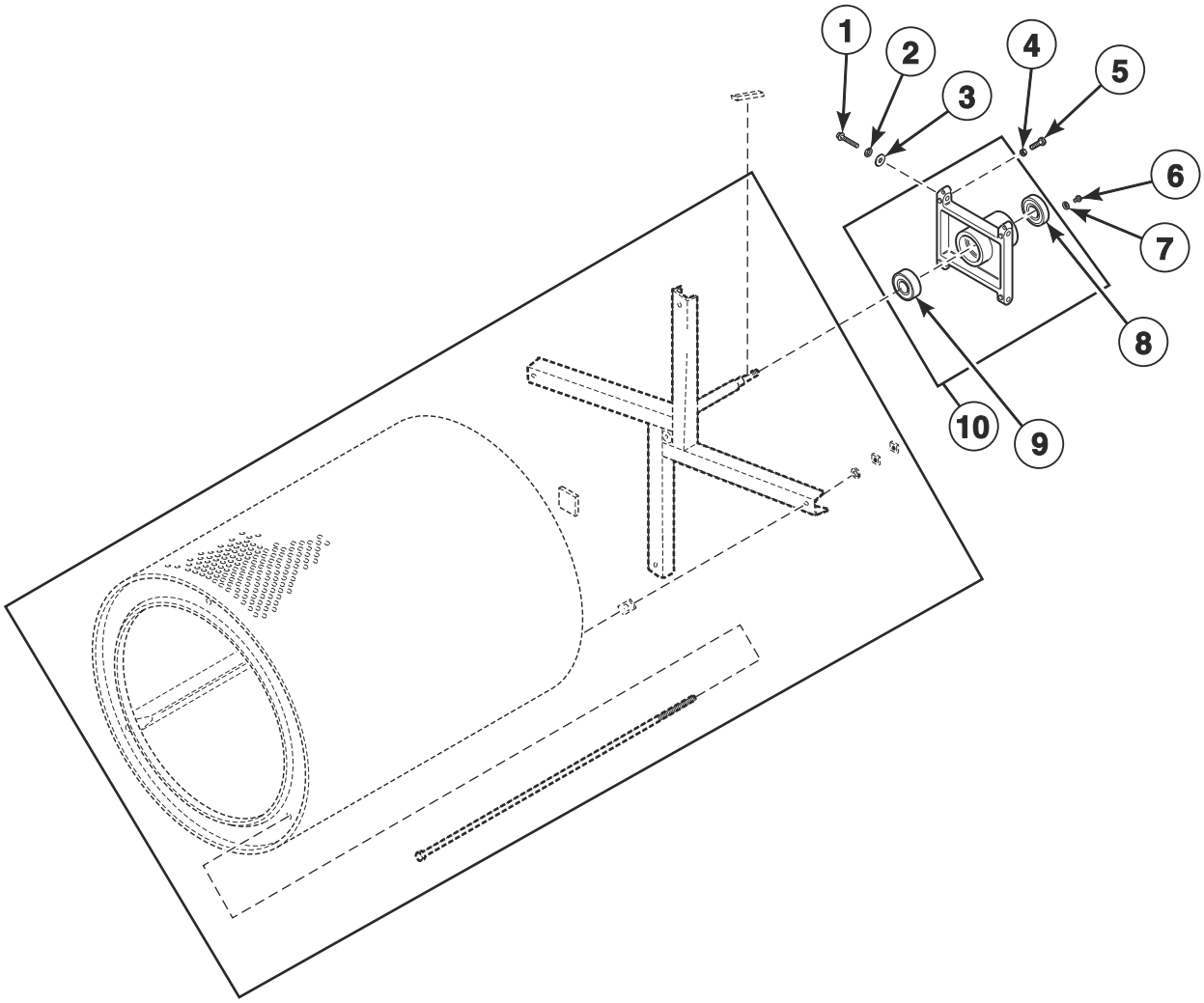

TMB2123PA

© Copyright, Alliance Laundry Systems LLC – DO NOT COPY or TRANSMIT

Bearing Components

REF	PART NO.	DESCRIPTION	COMMENTS
	M4640P3	Trunnion and Bearing Assembly	Non-moisture sensing
	44336301	Trunnion and Bearing Assembly	Moisture sensing
	M4644P3	Housing and Trunnion Assembly	Includes bearing; Non-moisture sensing
	44336302	Housing and Trunnion Assembly	Moisture sensing
1	M400063	Screw	4 required
2	M400015	Washer	4 required
3	70261401	Washer	4 required
4	M400026	Nut	4 required
5	M400650	Bolt	2 required
6	70187201	Screw	4 required
7	20103	Washer	4 required
8	M413923P	Bearing	
9	44041901P	Ball Bearing	
10	44375001P	Trunnion Assembly	Includes bearing

© Copyright, Alliance Laundry Systems LLC – DO NOT COPY or TRANSMIT

Moisture Sensing Components

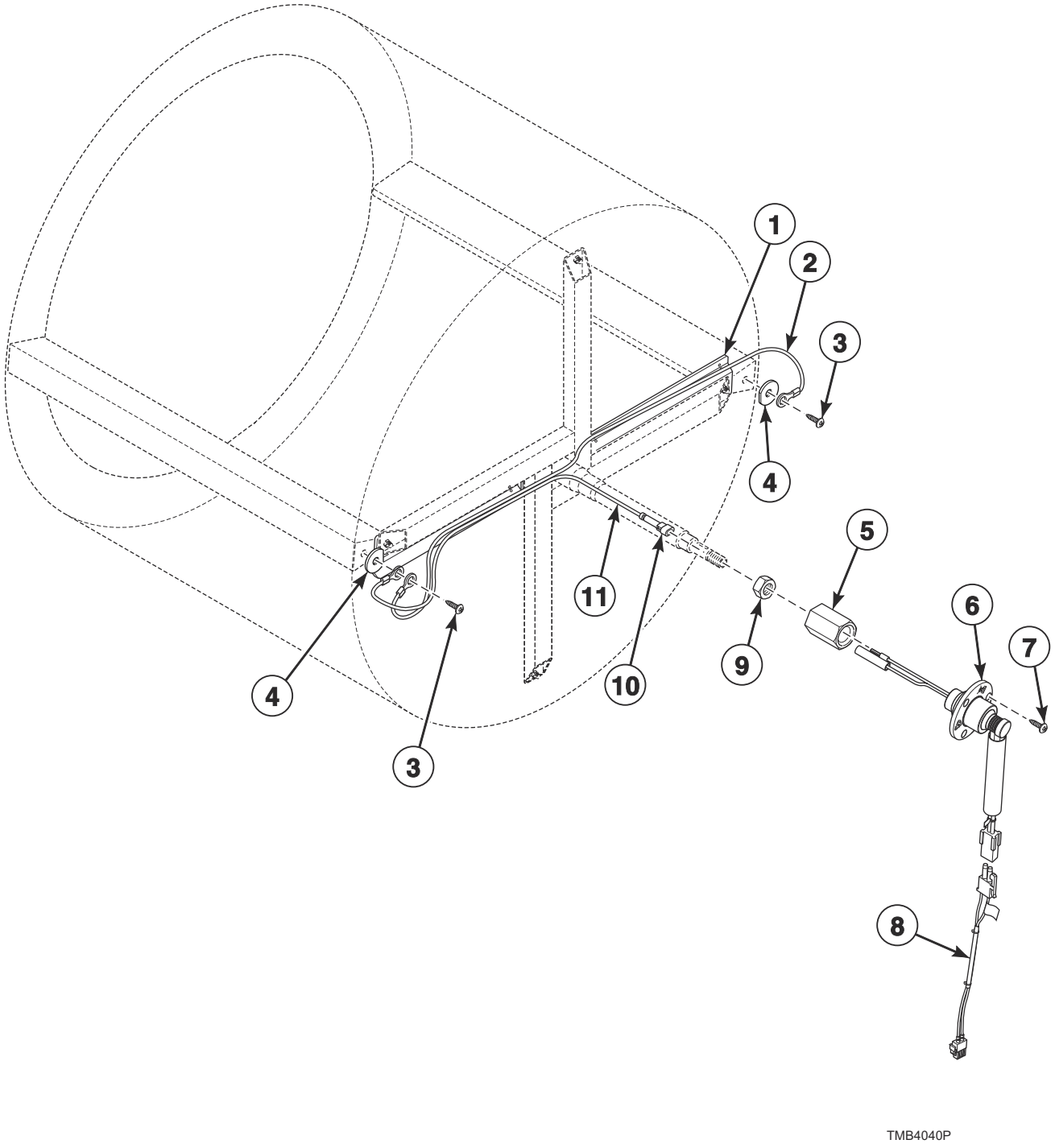

© Copyright, Alliance Laundry Systems LLC – DO NOT COPY or TRANSMIT

Moisture Sensing Components

REF	PART NO.	DESCRIPTION	COMMENTS
	44344702	Moisture Sensing Harness Kit	
	55881	Harness Strap	Use with item 1
	44375503	Adapter Harness	Goes to I/O Board
1	44239101	Wireway Channel	
2	44208601	Rib Wire	
3	44338901	Screw	
4	44238902	Washer	
5	44224401	Slip Ring Holder	
6	44222702	Slip Ring Assembly	
7	70442101	Screw	
8	44375501	Moisture Sensor Harness	Goes from item 6 to 44375503 Adapter Harness
9	M400033	Nut	
10	44370401	1 Circuit Plug Housing	
11	44208702	Shaft Wire	

© Copyright, Alliance Laundry Systems LLC – DO NOT COPY or TRANSMIT

Drive Motor Components

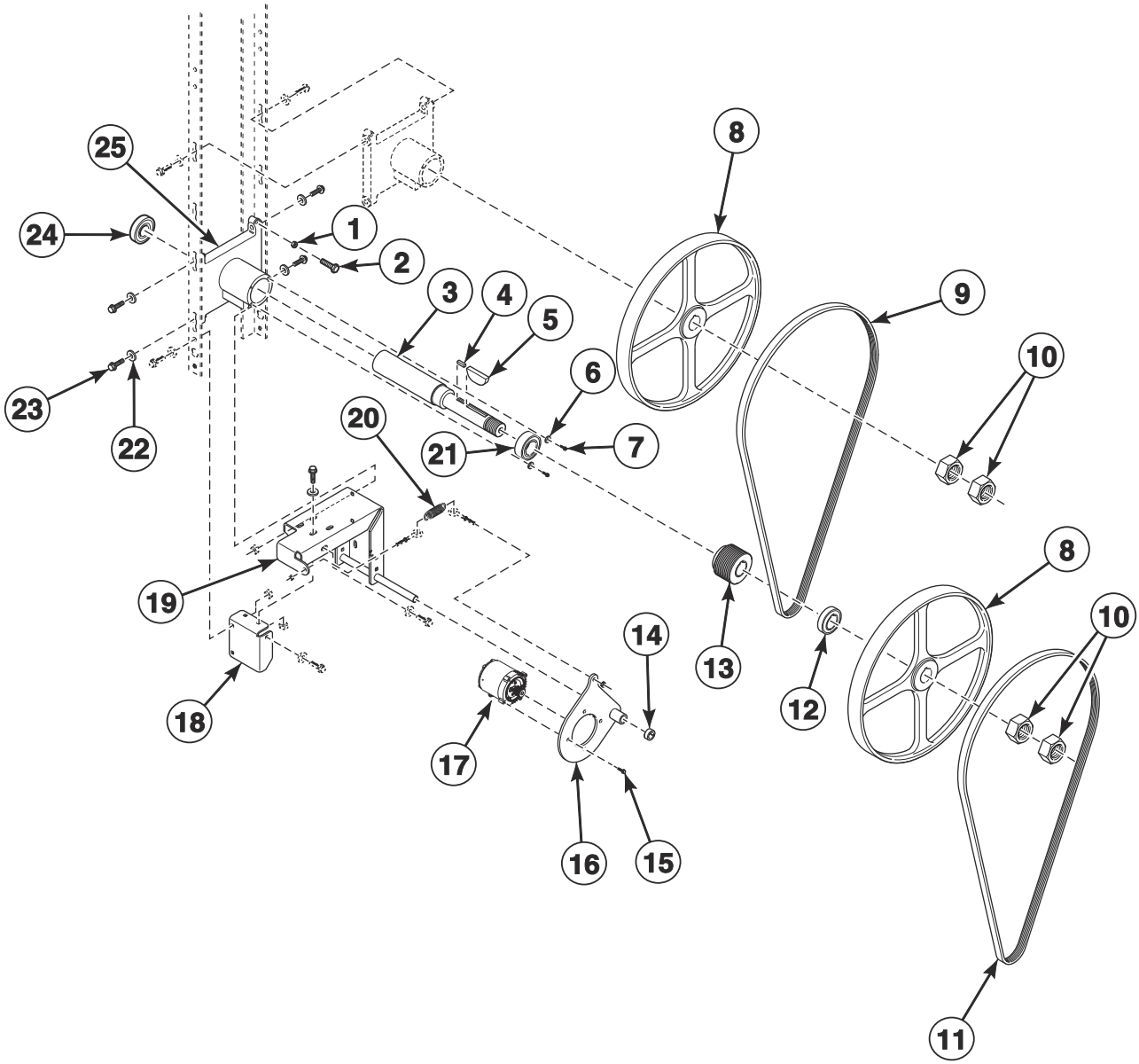

TMB4041P

© Copyright, Alliance Laundry Systems LLC – DO NOT COPY or TRANSMIT

Drive Motor Components

REF	PART NO.	DESCRIPTION	COMMENTS
	44333202	Nut	Use with motor pulley
	70635405	Inverter to Motor Harness	North America models; 120-240 Volt
	70635406	Inverter to Motor Harness	North America models; 380-480 Volt
	70635407	Inverter to Motor Harness	IEC models; 120-240 Volt
	70635408	Inverter to Motor Harness	IEC models; 380-480 Volt
	44375001P	Trunnion Assembly	Includes items 6, 7, 21, 24 and 25
1	M400026	Nut	
2	M400650	Bolt	
3	44303102	Idler Shaft	
4	44309301	Key	
5	M400008	Key	
6	20103	Washer	
7	70187201	Screw	
8	44289502	Pulley	
9	44333301	V-Belt	Upper
10	M400033	Nut	
11	44309402	V-Belt	Lower
12	44306801	Idler Spacer	
13	44374001	Micro V Pulley	
14	70467001	Shaft Collar	
15	44364602	Screw	
16	44311501	Motor Pivot Plate Weldment	
17	44355005P	Drive Motor	.50 HP; 240 Volt
	44355006P	Drive Motor	.50 HP; 480 Volt
18	44325801	Motor Pivot Support Bracket	
19	44327001	Motor Pivot Bracket Weldment	
20	F8440701	Extension Spring	
21	M413923P	Bearing	
22	70261401	Washer	4 required
23	805213	Screw	4 required
24	44041901P	Ball Bearing	
25	M413826P	Trunnion Housing	

© Copyright, Alliance Laundry Systems LLC – DO NOT COPY or TRANSMIT

Blower and Exhaust Components

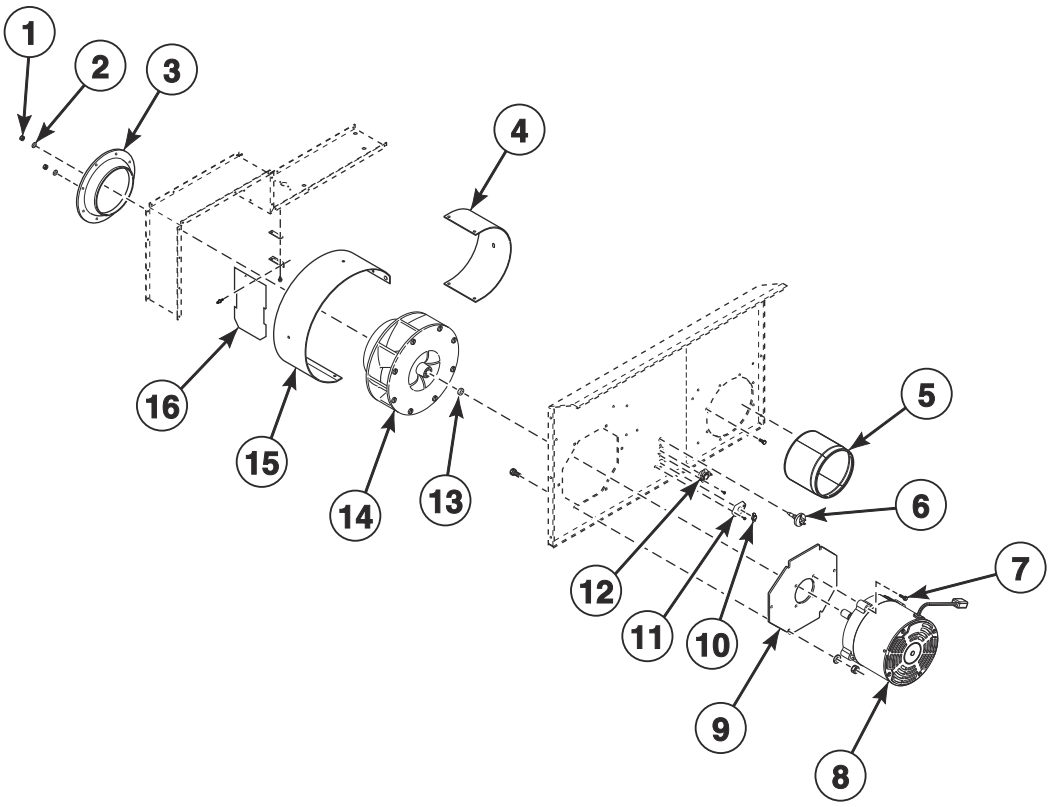

TMB4033P

© Copyright, Alliance Laundry Systems LLC – DO NOT COPY or TRANSMIT

Blower and Exhaust Components

REF	PART NO.	DESCRIPTION	COMMENTS
1	70688901	Nut	
2	F431131	Washer	
3	70303101	Blower Inlet Cone	
4	44308401	Air Exhaust Deflector	
5	44327901	Exhaust Pipe Assembly	
6	M414704	Thermistor	
7	44364601	Screw	
8	44354901P	Fan Motor	.50 HP; 240 Volt; All models with 0 in 5th position of Serial No.; Models through Serial No. 2503 with 6 in 5th position of Serial No.
	44402301P	Fan Motor	.50 HP; 240 Volt; Models starting Serial No. 2504 with 6 in 5th position of Serial No.
	44354903P	Fan Motor	.50 HP; 480 Volt
9	44380401	Blower Motor Mounting Plate	
10	70530905	Limit Thermostat	Manual reset
11	44312501	Thermostat Opening Cover	
12	44328003	Limit Thermostat	
13	70599301	Fan Spacer	
14	70302201P	Blower Assembly	
15	44303801	Blower Housing Scroll	
16	44280301	Damper Assembly	

© Copyright, Alliance Laundry Systems LLC – DO NOT COPY or TRANSMIT

Inverter Tray Components

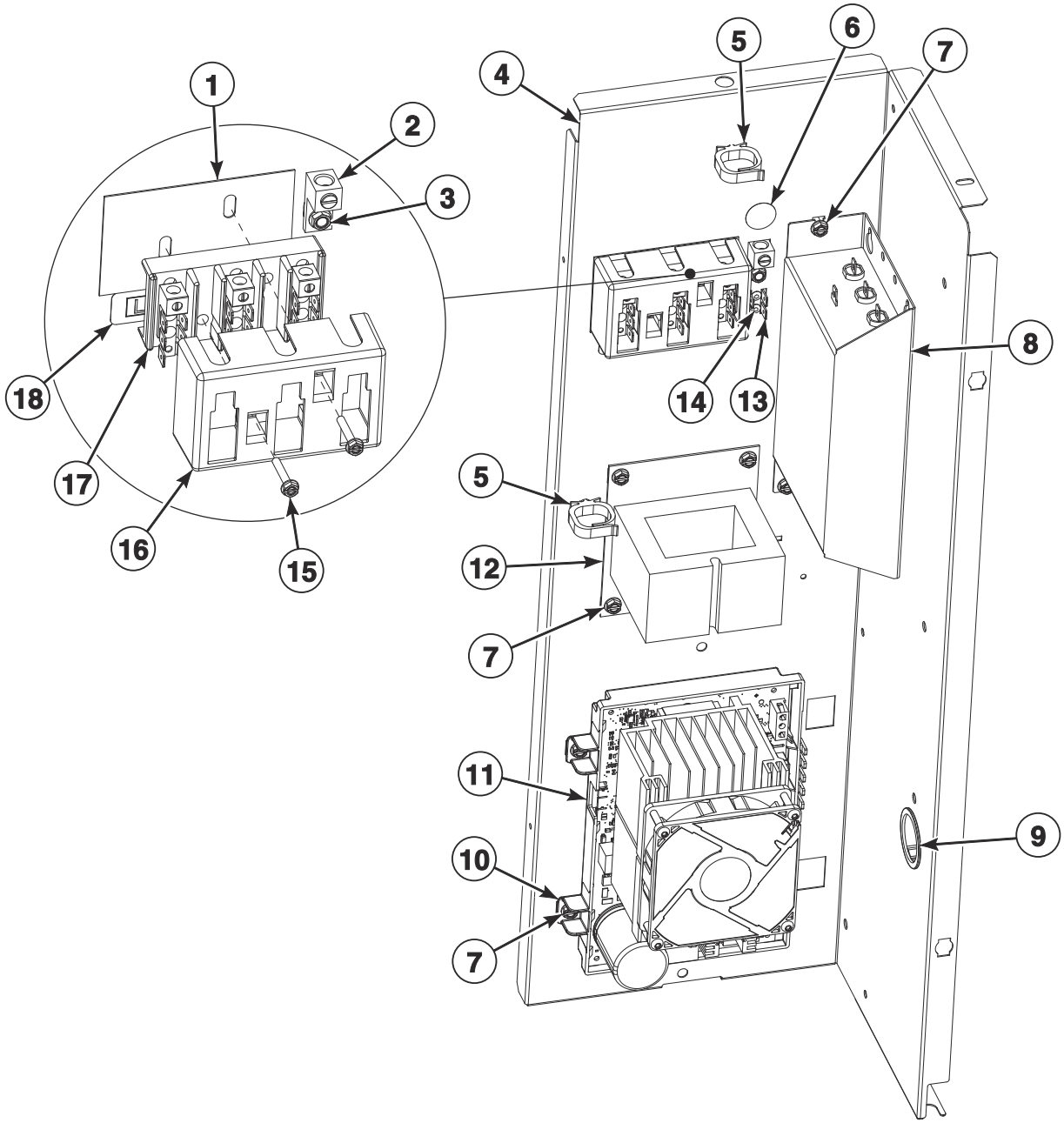

TMB3901P

© Copyright, Alliance Laundry Systems LLC – DO NOT COPY or TRANSMIT

Inverter Tray Components

REF	PART NO.	DESCRIPTION	COMMENTS
	70671001	Inverter Power Conversion Harness	X to B voltage; Gas models
	44375701	Inverter Control Power Harness	T and G market models; 120-240 Volt
	44375703	Inverter Control Power Harness	T and G market models; 380-480 Volt
	44375704	Inverter Control Power Harness	IEC models; 120-240 Volt
	44375706	Inverter Control Power Harness	IEC models; 380-480 Volt
	44375401	Harness	Gas and steam models; 120-240 Volt/1 Phase; Power distribution block to EMI filter
	44375402	Harness	Gas and steam models; 380-480 Volt/3 Phase; Power distribution block to EMI filter
1	M413862	Insulator	T and G market models; IEC gas models
2	M411283	Ground Lug Connector	Gas models
3	685837	Screw	Gas models; Use with 44088001 Nut
4	44364201	Inverter Drive Tray	
5	F8449502	Wire Clip	380-480 Volt
6	D516100	Label	Gas models
7	F8206901	Screw	
8	F8591601	EMI Filter	IEC models; 120-240 Volt
	F8637501	EMI Filter	IEC models; 380-480 Volt
9	70346501	Bushing	
10	70030501	Expansion Clip	
11	70603002	Inverter Control Assembly	1 HP; 120-240 Volt
	70603201	Inverter Control Assembly	1 HP; 380-480 Volt
12	F8491101	Transformer	380-480 Volt
13	00622SG	Terminal	
14	M400003	Pop Rivet	
15	51783	Screw	T and G market models; IEC gas models
16	70333001	Terminal Block Shield	T and G market models; IEC gas models
17	430642	Terminal Block	T and G market models; IEC gas models
18	44286803	Label	Gas models; N and P voltage; L1, L2, L3
	44286801	Label	Gas models; B voltage; L1, N
	44286804	Wire Label	Gas models; X voltage; L1 L2, L1 N, L1 L2 L3

© Copyright, Alliance Laundry Systems LLC – DO NOT COPY or TRANSMIT

Airflow Switch Assembly

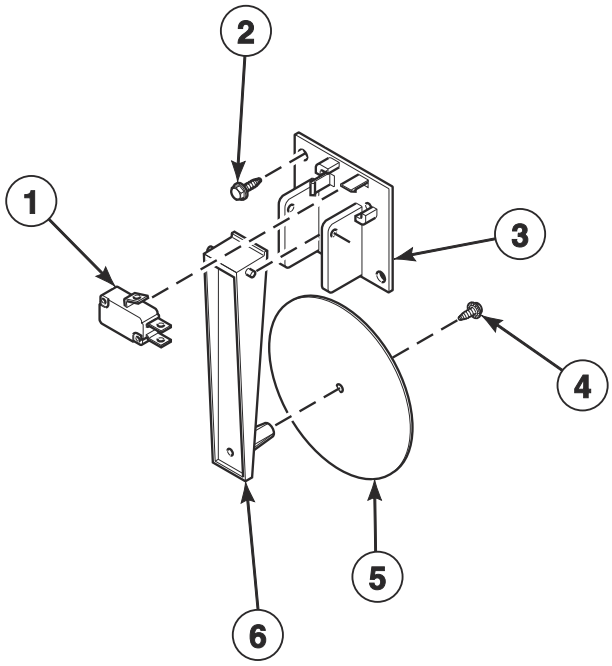

TMB3586P

© Copyright, Alliance Laundry Systems LLC – DO NOT COPY or TRANSMIT

Airflow Switch Assembly

REF	PART NO.	DESCRIPTION	COMMENTS
	70429602	Airflow Switch Assembly	Includes items 1 and 3-6
1	70411901	Switch	
2	430497	Screw	6 required
3	70319602	Airflow Switch and Arm Bracket	
4	430757	Screw	
5	70319202	Airflow Switch Vane	
6	70319401	Airflow Switch Arm	

© Copyright, Alliance Laundry Systems LLC – DO NOT COPY or TRANSMIT

Gas Heater Components - Models with D, F, N and W in the 7th Position

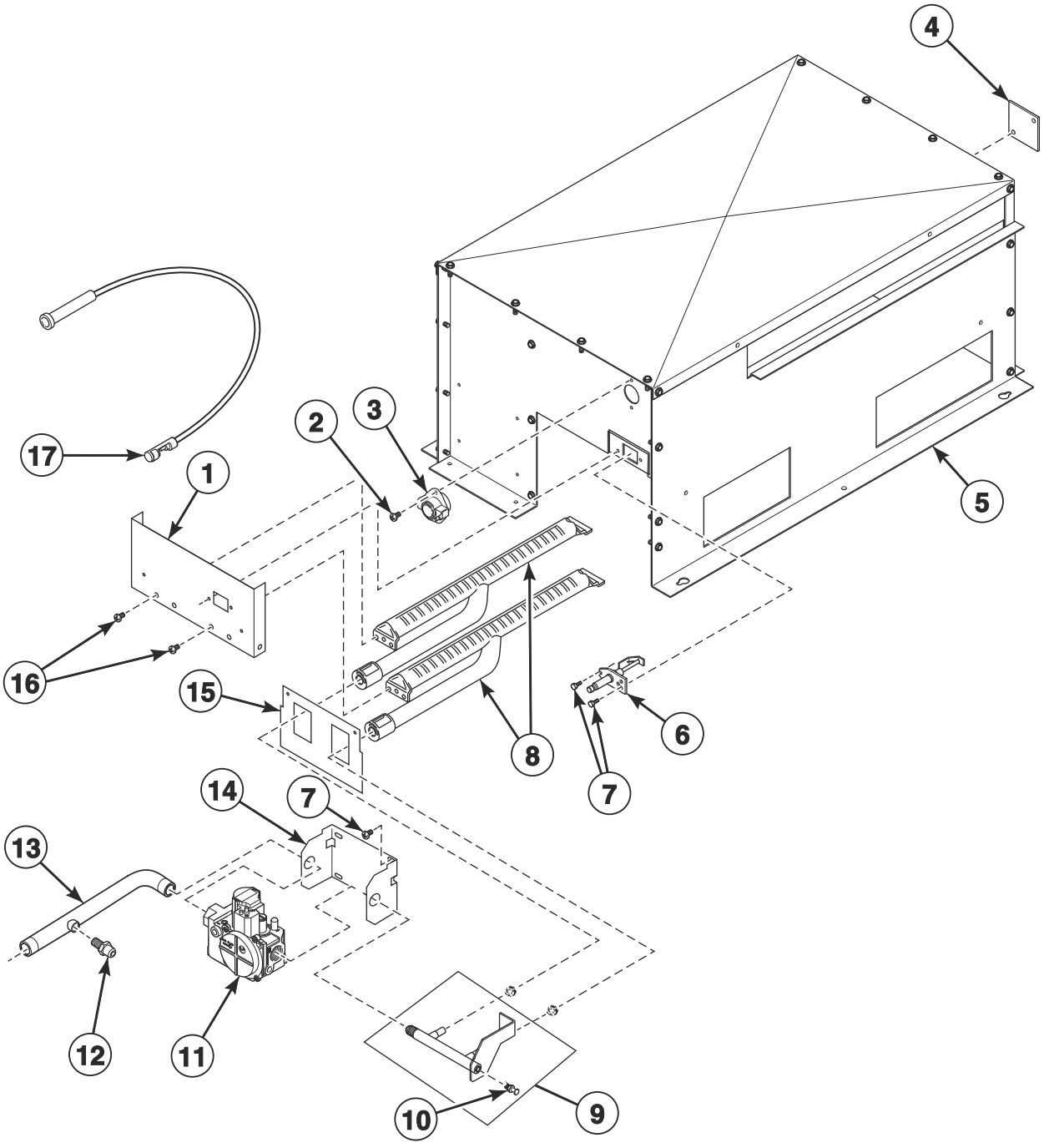

TMB3897P

© Copyright, Alliance Laundry Systems LLC – DO NOT COPY or TRANSMIT

Gas Heater Components - Models with D, F, N and W in the 7th Position

REF	PART NO.	DESCRIPTION	COMMENTS
	70539501	Notice Label	Australian models; Natural Gas (N.G.)
	70544901	Notice Label	Australian models; Liquid Petroleum Gas (L.P.)
	D503887	Label	Australian models; Gas
	44178801	Adapter	CE and Australian models; Used to convert from standard to metric thread
	44328801	L.P. Conversion Kit	T and G market models; 0-2000 feet
	44328809	L.P. Conversion Kit	Australian models; 0-2000 feet
	44330301	L.P. Conversion Kit	IEC models; 0-2000 feet
	44273502	Gas Valve Harness	Double; CE models
	44273501	Gas Valve Harness	Single; All other models
	44366301	Gas Valve/Thermostat Harness	
1	44110201	Burner Support	
2	M402797	Screw	2 required
3	44328007	Limit Thermostat	
4	70159601	Igniter Cover	
5	44136004	Gas Stove Assembly	
6	44328701P	Spark Electrode	
7	430497	Screw	2 required
8	M410541P	Burner Assembly	2 required
9	44263103	Spud Holder Weldment	
10	70167601	Plug	
11	44154501P	Gas Valve	North America models; N.G.
	44154502P	Gas Valve	North America models; L.P.
	44298501	Gas Valve	Australian models; N.G.
	44298504	Gas Valve	Australian models; L.P.
	44178301P	Gas Valve	CE models; N.G.
	44178302P	Gas Valve	CE models; L.P.
	44154505	Gas Valve	All other models; N.G.
	44154506	Gas Valve	All other models; L.P.
12	44231601	Pressure Fitting	CE and Australian models
13	44377001	Lead-In Pipe	A, K and U market models
	44377101	Lead-In Pipe	All other models
14	44175703	Gas Valve Bracket	
15	44136101	Rear Access Plate	
16	70240301	Screw	4 required
17	44239704	High Voltage Suppression Cable	

© Copyright, Alliance Laundry Systems LLC – DO NOT COPY or TRANSMIT

Gas Heater Components - Models with V in the 7th Position

B, H, P and S Models

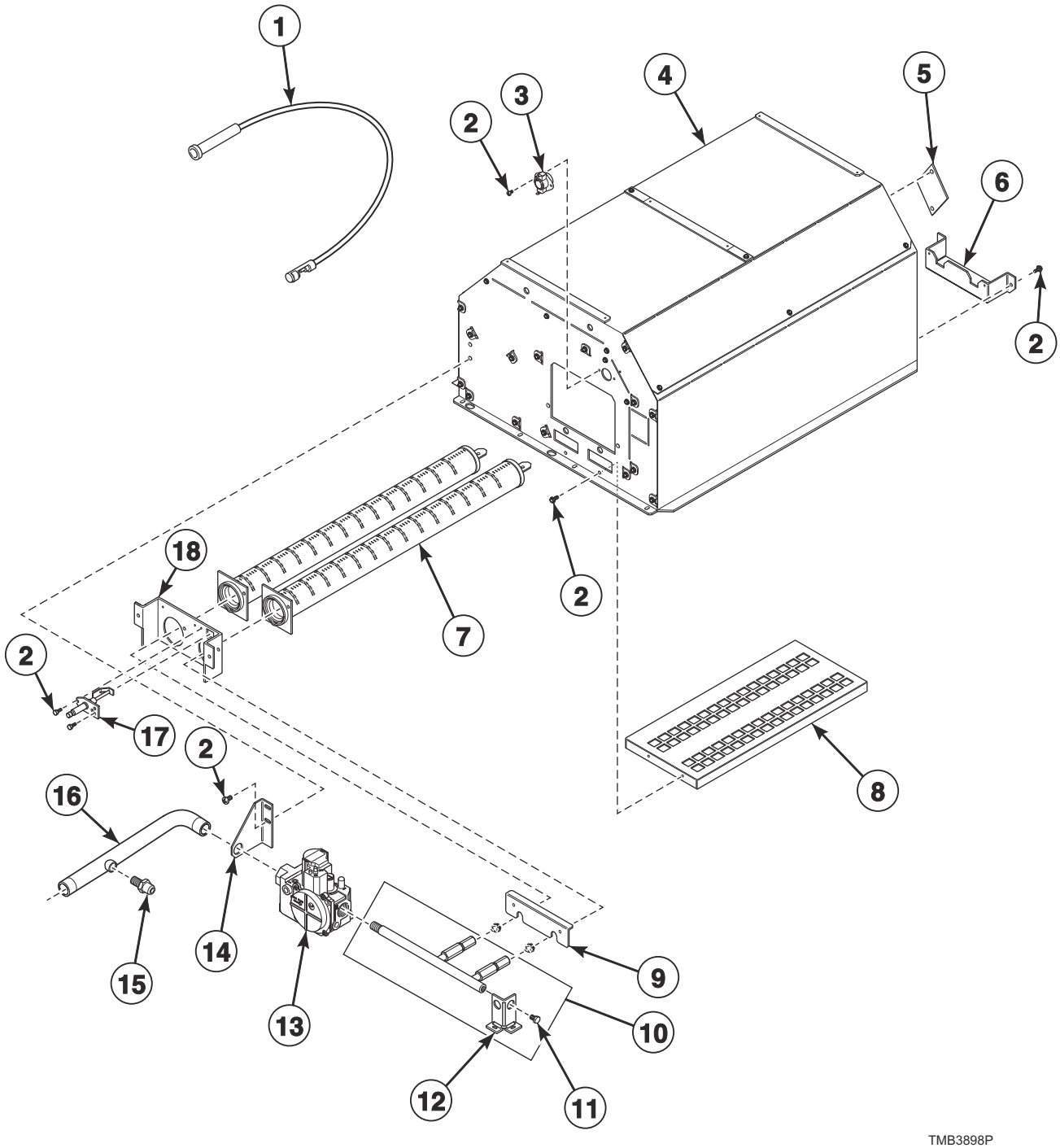

© Copyright, Alliance Laundry Systems LLC – DO NOT COPY or TRANSMIT

Gas Heater Components - Models with V in the 7th Position

REF	PART NO.	DESCRIPTION	COMMENTS
	70539501	Notice Label	Australian models; Natural Gas (N.G.)
	70544901	Notice Label	Australian models; Liquid Petroleum Gas (L.P.)
	D503887	Label	Australian models; Gas
	44178801	Adapter	CE and Australian models; Used to convert from standard to metric thread
	44355201	L.P. Conversion Kit	T and G market models; 0-2000 feet
	44328810	L.P. Conversion Kit	Australian models; 0-2000 feet
	44330306	L.P. Conversion Kit	IEC models; 0-2000 feet
	44273502	Gas Valve Harness	Double; CE models
	44273501	Gas Valve Harness	Single; All other models
	44366301	Gas Valve/Thermostat Harness	
1	44239704	High Voltage Suppression Cable	
2	430497	Screw	2 required
3	44328005	Limit Thermostat	
4	44352601	Gas Heater Assembly	
5	70159601	Igniter Cover	Included with item 4
6	44341701	Burner Support	Included with item 4
7	70229801P	Gas Burner	2 required
8	44354301	Burner Grate	Included with item 4
9	44353901	Burner Cover	
10	44340802	Orifice Adapter	
11	70167601	Plug	
12	44342101	Orifice Adapter Support	
13	44154501P	Gas Valve	North America models; N.G.
	44154502P	Gas Valve	North America models; L.P.
	44298501	Gas Valve	Australian models; N.G.
	44298504	Gas Valve	Australian models; L.P.
	44178301P	Gas Valve	CE models; N.G.
	44178302P	Gas Valve	CE models; L.P.
	44154505	Gas Valve	All other models; N.G.
	44154506	Gas Valve	All other models; L.P.
14	44340701	Gas Valve Bracket	
15	44231601	Pressure Fitting	CE and Australian models
16	44377001	Lead-In Pipe	A, K and U market models
	44377101	Lead-In Pipe	All other models
17	70548701P	Spark Electrode	
18	44341801	Burner Support	Included with item 4

© Copyright, Alliance Laundry Systems LLC – DO NOT COPY or TRANSMIT

Burner Orifices

Models with D, F, N and W in the 7th Position

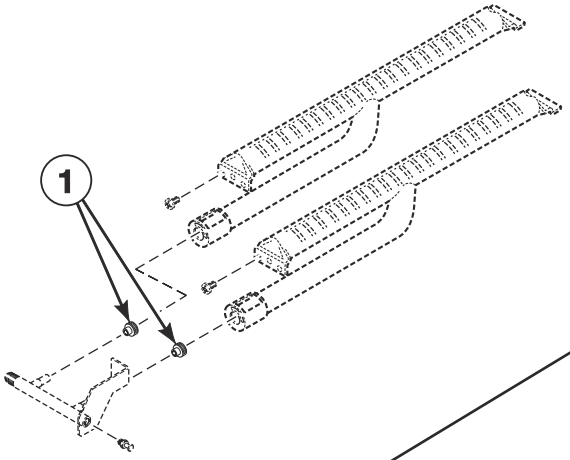

Models with V in the 7th Position

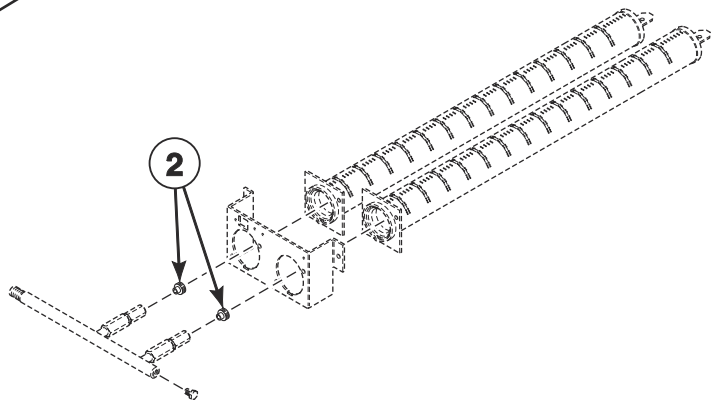

TMB3899P

© Copyright, Alliance Laundry Systems LLC – DO NOT COPY or TRANSMIT

Burner Orifices

REF	PART NO.	DESCRIPTION	COMMENTS
	44357501	High Altitude Orifice Kit	Natural gas (N.G.) models
	44357502	High Altitude Orifice Kit	Liquid Petroleum Gas (L.P.) models with A, G, H, K and T in the 2nd position
1	70684138	Burner Orifice	N.G. models; Drill no. 24 (3.86 mm); 0-2,000 feet
	70684134	Burner Orifice	N.G. models; Drill no. 28 (3.57 mm); 2,001-4,000 feet
	70684132	Burner Orifice	N.G. models; Drill no. 29 (3.45 mm); 4,001-6,000 feet
	70684130	Burner Orifice	N.G. models; 3.3 mm; 6,001-10,000 feet
	70684113	Burner Orifice	Models with 2nd digit A, G, H, J, K, L and T; L.P.; 2.30 mm; 0-2,000 feet
	70684110	Burner Orifice	Models with 2nd digit A, G, H, J, K, L and T; L.P.; Drill no. 44 (2.18 mm); 2,001-4,000 feet
	70684109	Burner Orifice	Models with 2nd digit A, G, H, J, K, L and T; L.P.; Drill no. 45 (2.08 mm); 4,001-6,000 feet
	70684108	Burner Orifice	Models with 2nd digit A, G, H, J, K, L and T; L.P.; Drill no. 46 (2.06 mm); 6,001-8,000 feet
	70684106	Burner Orifice	Models with 2nd digit A, G, H, J, K, L and T; L.P.; Drill no. 48 (1.93 mm); 8,001-10,000 feet
	70684106	Burner Orifice	CE models L.P.; Drill no. 48 (1.93 mm); 0-2,000 feet
	70684105	Burner Orifice	CE models L.P.; Drill no. 49 (1.85 mm); 2,001-4,000 feet
	70684104	Burner Orifice	CE models L.P.; Drill no. 50 (1.78 mm); 4,001-6,000 feet
	70684158	Burner Orifice	CE models L.P.; Drill no. 51 (1.70 mm); 6,001-8,000 feet
	70684103	Burner Orifice	CE models L.P.; Drill no. 52 (1.61 mm); 8,001-10,000 feet
	70684109	Burner Orifice	J market models L.P.; Drill no. 45 (2.08 mm); 0-2,000 feet
	70684107	Burner Orifice	J market models L.P.; Drill no. 47 (1.93 mm); 2,001-4,000 feet
	70684106	Burner Orifice	J market models L.P.; Drill no. 48 (1.93 mm); 4,001-6,000 feet
	70684105	Burner Orifice	J market models L.P.; Drill no. 49 (1.85 mm); 6,001-8,000 feet
	70684104	Burner Orifice	J market models L.P.; Drill no. 50 (1.78 mm); 8,001-10,000 feet
2	70684136	Burner Orifice	B, H, P and S N.G. models; Drill no. 26 (3.73 mm); 0-2,000 feet
	70684134	Burner Orifice	B, H, P and S N.G. models; Drill no. 28 (3.57 mm); 2,001-4,000 feet
	70684132	Burner Orifice	B, H, P and S N.G. models; Drill no. 29 (3.45 mm); 4,001-6,000 feet
	70684130	Burner Orifice	B, H, P and S N.G. models; 3.3 mm; 6,001-8,000 feet
	70684128	Burner Orifice	B, H, P and S N.G. models; Drill no. 1/8 (3.18 mm); 8,001-10,000 feet
	70684113	Burner Orifice	B, H, P and S J market models L.P.; 2.30 mm; 0-2,000 feet
	70684109	Burner Orifice	B, H, P and S J market models L.P.; Drill no. 45 (2.08 mm); 2,001-4,000 feet
	70684107	Burner Orifice	B, H, P and S J market models L.P.; Drill no. 47 (1.99 mm); 4,001-6,000 feet
	70684106	Burner Orifice	B, H, P and S J market models L.P.; Drill no. 48 (1.93 mm); 6,001-8,000 feet
	70684105	Burner Orifice	B, H, P and S J market models L.P.; Drill no. 49 (1.85 mm); 8,001-10,000 feet
	70684113	Burner Orifice	All other B, H, P and S models L.P.; 2.30 mm; 0-2,000 feet
	70684110	Burner Orifice	All other B, H, P and S models L.P.; Drill no. 44 (2.18 mm); 2,001-4,000 feet
	70684109	Burner Orifice	All other B, H, P and S models L.P.; Drill no. 45 (2.08 mm); 4,001-6,000 feet
	70684108	Burner Orifice	All other B, H, P and S models L.P.; Drill no. 46 (2.06 mm); 6,001-8,000 feet
	70684106	Burner Orifice	All other B, H, P and S models L.P.; Drill no. 48 (1.93 mm); 8,001-10,000 feet

© Copyright, Alliance Laundry Systems LLC – DO NOT COPY or TRANSMIT

Electric Heater Components

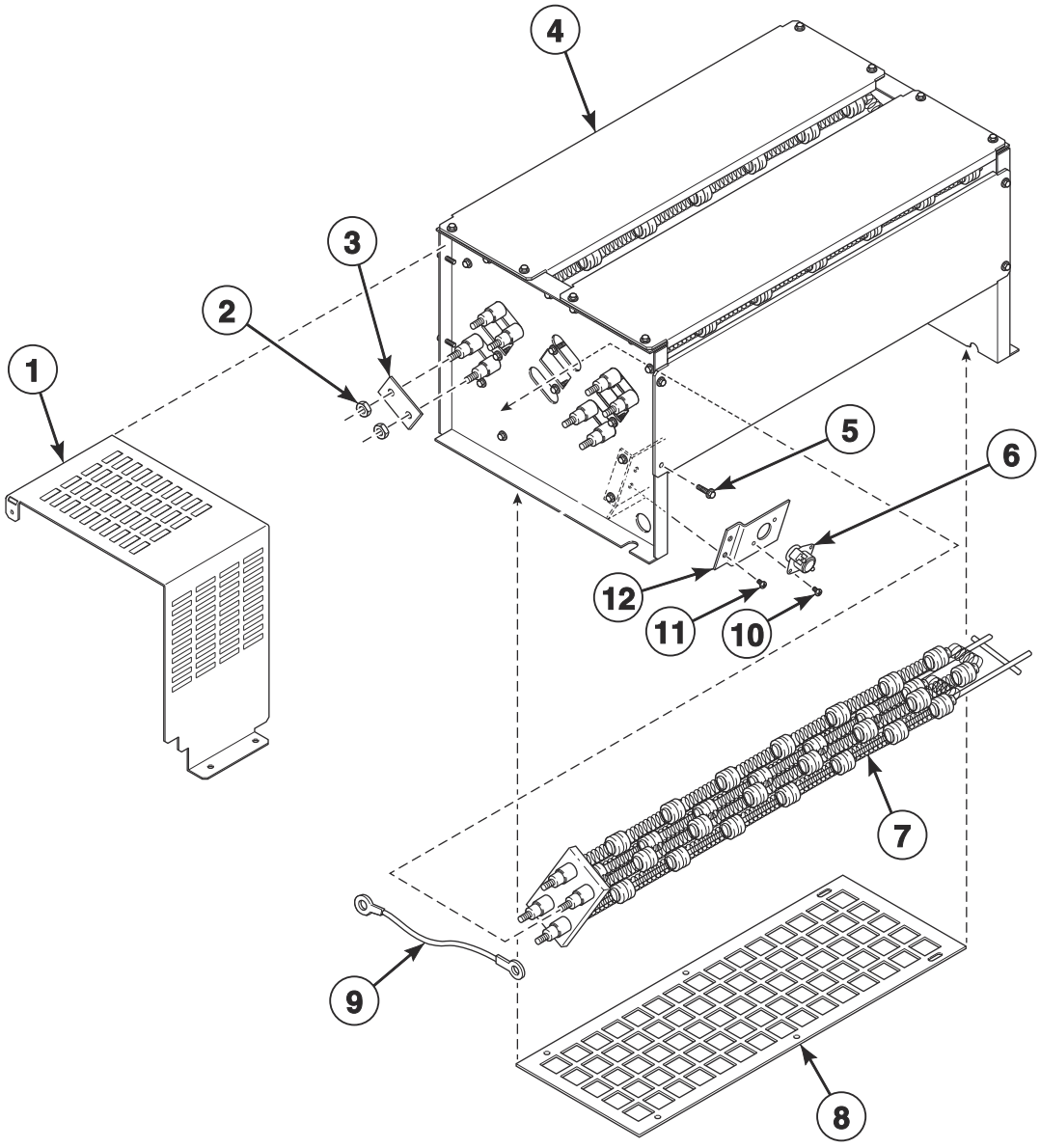

TMB3900P

© Copyright, Alliance Laundry Systems LLC – DO NOT COPY or TRANSMIT

Electric Heater Components

REF	PART NO.	DESCRIPTION	COMMENTS
	44366302	Harness	Contactor to coil/fan/thermostat
1	44364702	Electric Wrap	
2	70054	Nut	
3	M400869	Jumper Strip	3 required for high voltage; 6 required for low voltage
4	44252501	Electric Stove Assembly	
5	70240301	Screw	
6	44328006	Limit Thermostat	
7	M410939P	Heater Element	3 required; 10 kW; 240 Volt heater element for 230-240, 400-415 and 480 Volt/3 Phase models
	M410940P	Heater Element	3 required; 10 kW; 208 Volt heater element for 200-208 Volt/3 Phase models
	M410941P	Heater Element	3 required; 10 kW 220 Volt heater element for 380 and 440 Volt/3 Phase models
	M412955P	Heater Element	3 required; 7 kW; 240 Volt heater element for 230-240 Volt/1 Phase models
8	44308801	Heating Element Screen	
9	70639808	Jumper Harness	3 inch; 380-415 Volt
	70639809	Jumper Harness	9 inch; 440-480 Volt
10	33562	Screw	
11	430497	Screw	
12	44226101	Limit Offset Bracket	

© Copyright, Alliance Laundry Systems LLC – DO NOT COPY or TRANSMIT

Steam Heater and Valve

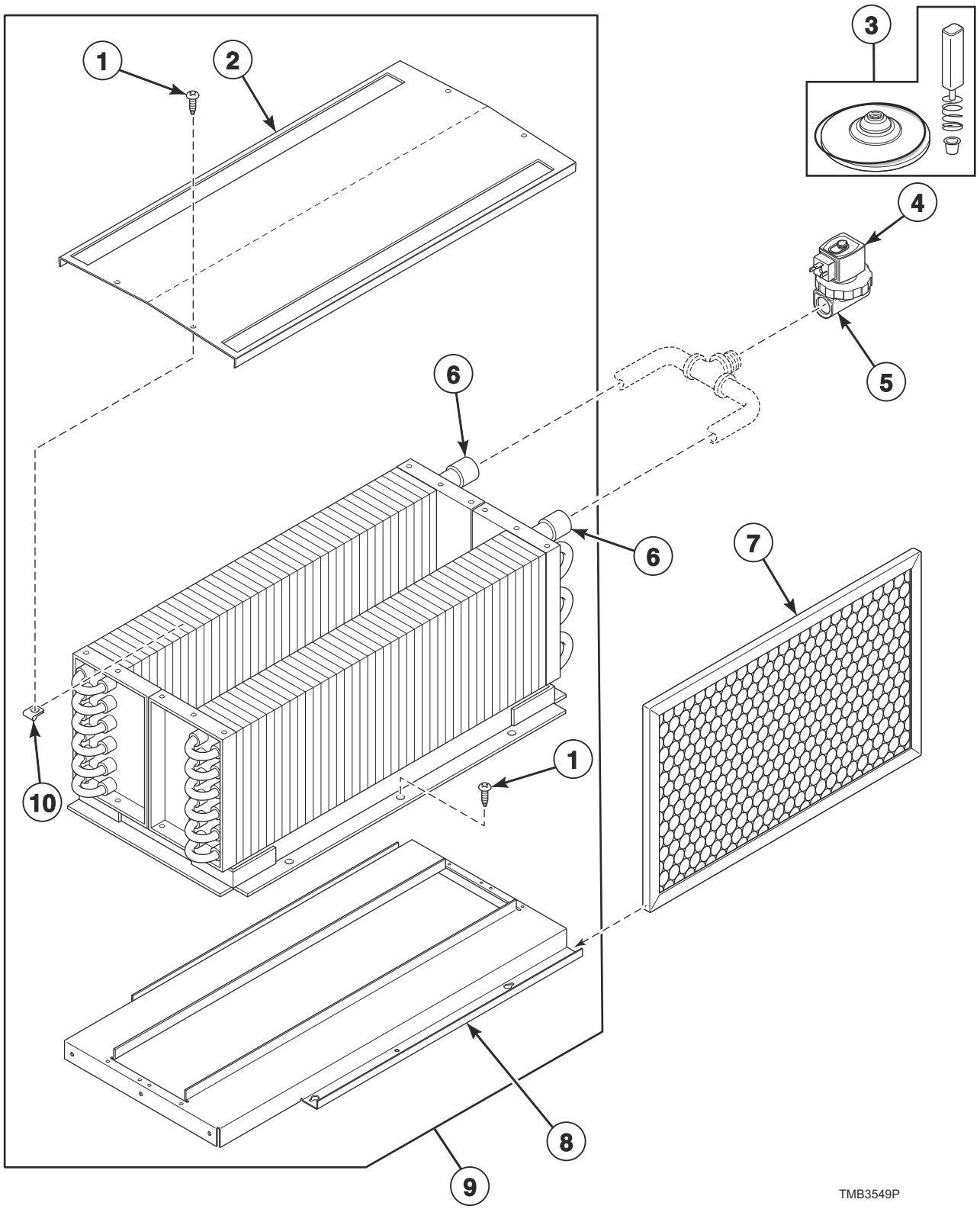

© Copyright, Alliance Laundry Systems LLC – DO NOT COPY or TRANSMIT

Steam Heater and Valve

REF	PART NO.	DESCRIPTION	COMMENTS
	44366303	Stove Limit Bypass Harness	
	F8520703	Steam Valve Harness	
	44314701	Steam Adapter Kit	IEC models
	44304801	Strain Relief	
	F8382301	DIN Valve Adapter Kit	Use with item 5
1	23008	Screw	4 required
2	M400828	Low Pressure Steam Cover	
3	F8379502	Valve Rebuild Kit	
4	F8514701	Coil	120 Volt
	F8514601P	Coil	240 Volt
5	F8322904P	Steam Valve	120 Volt
	F8322906P	Valve	240 Volt
6	44256301	Steam Coil	2 required; CRN models
	M400637P	Steam Coil	2 required; All other models
7	44172001	Filter	Aluminum; 2 required; IEC models
	44104201	Air Filter	Fiberglass; 2 required; T and G market models
8	44007501	Steam Stand Box	
9	44020402	Steam Heater Assembly	CRN models
	44020401P	Steam Heater Assembly	All other models
10	36020	Nut	4 required

© Copyright, Alliance Laundry Systems LLC – DO NOT COPY or TRANSMIT

Control Tray

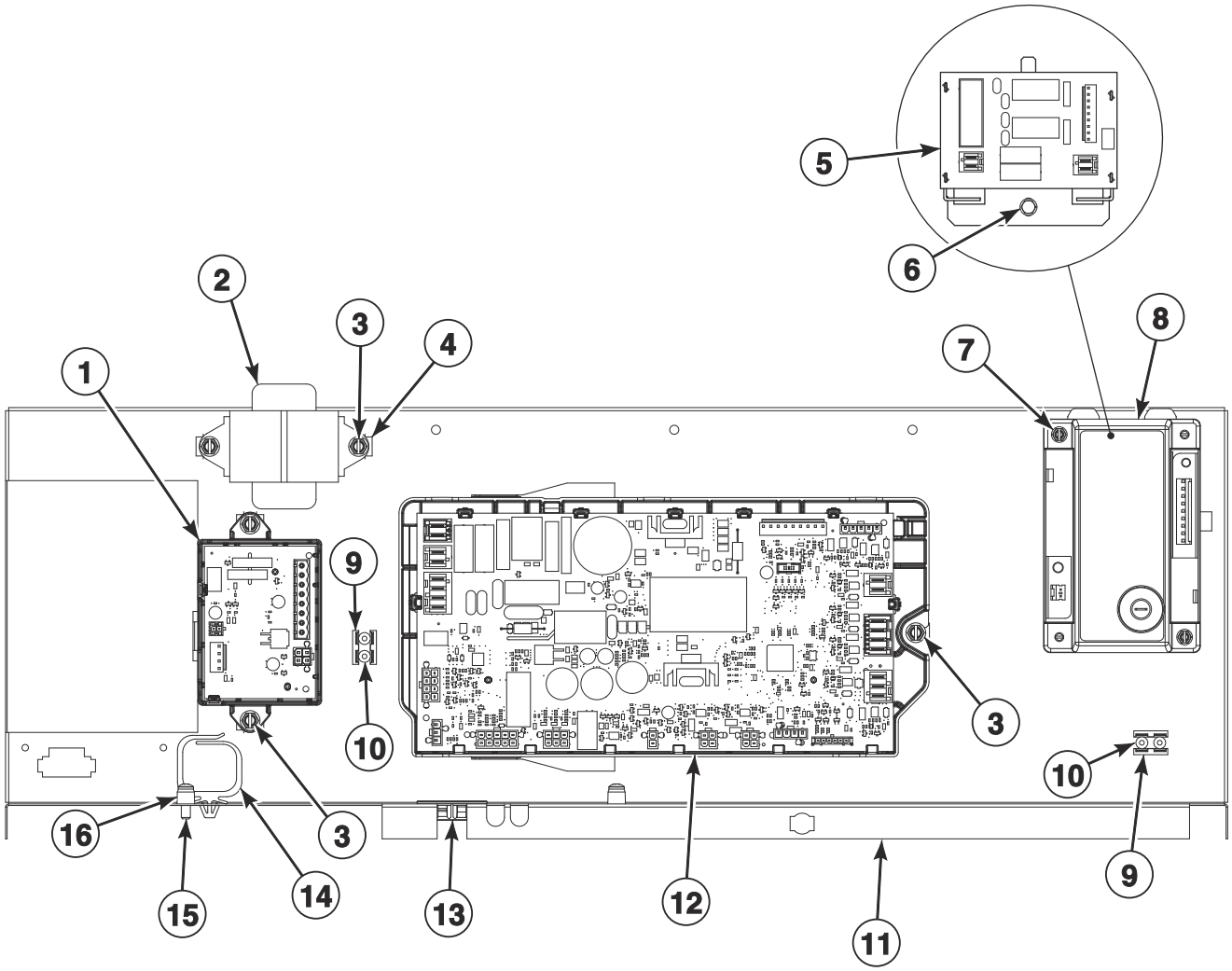

TMB3902P

© Copyright, Alliance Laundry Systems LLC – DO NOT COPY or TRANSMIT

Control Tray

REF	PART NO.	DESCRIPTION	COMMENTS
	44362701	Rear Main Harness	
	44374901	Heat Control Harness	Gas and steam models
	44378001	Steam Control Harness	Steam models
	70631703	Primary Transformer Vend Harness	120 Volt; Card and central pay
	70631704	Primary Transformer Vend Harness	240 Volt; Card and central pay
	70631705	Central Pay Board Power Supply Harness	24V
	44377401	CARE Harness Bracket	Mounts to item 11
	70696802	Conversion Kit	X to B voltage; Models with D, F, N or W in the 7th position
	70696806	Conversion Kit	X to B voltage; Models with V in the 7th position
1	204779	Central Pay Control Assembly	
2	202757	Transformer	100-200 Volt; Card and central pay
	202758	Transformer	200-480 Volt; Card and central pay
3	F8206901	Screw	
4	70030501	Expansion Clip	
5	70501801	Steam Control Assembly	Steam models
6	51780	Screw	
7	51783	Screw	
8	70482002P	Ignition Control	IEC gas models
	70482001	Ignition Control	T and G market gas models
9	00622SG	Terminal	Gas and steam models 2 required; Electric models 1 required
10	M400003	Pop Rivet	
11	44364101	Control Tray	
12	70671701	I/O Control Assembly	
13	70346501	Bushing	
14	F8449501	Wire Clip	
15	39733	Screw	
16	56079	Panel Locator	

© Copyright, Alliance Laundry Systems LLC – DO NOT COPY or TRANSMIT

Accessory Box - Electric 200-240 Volt Models

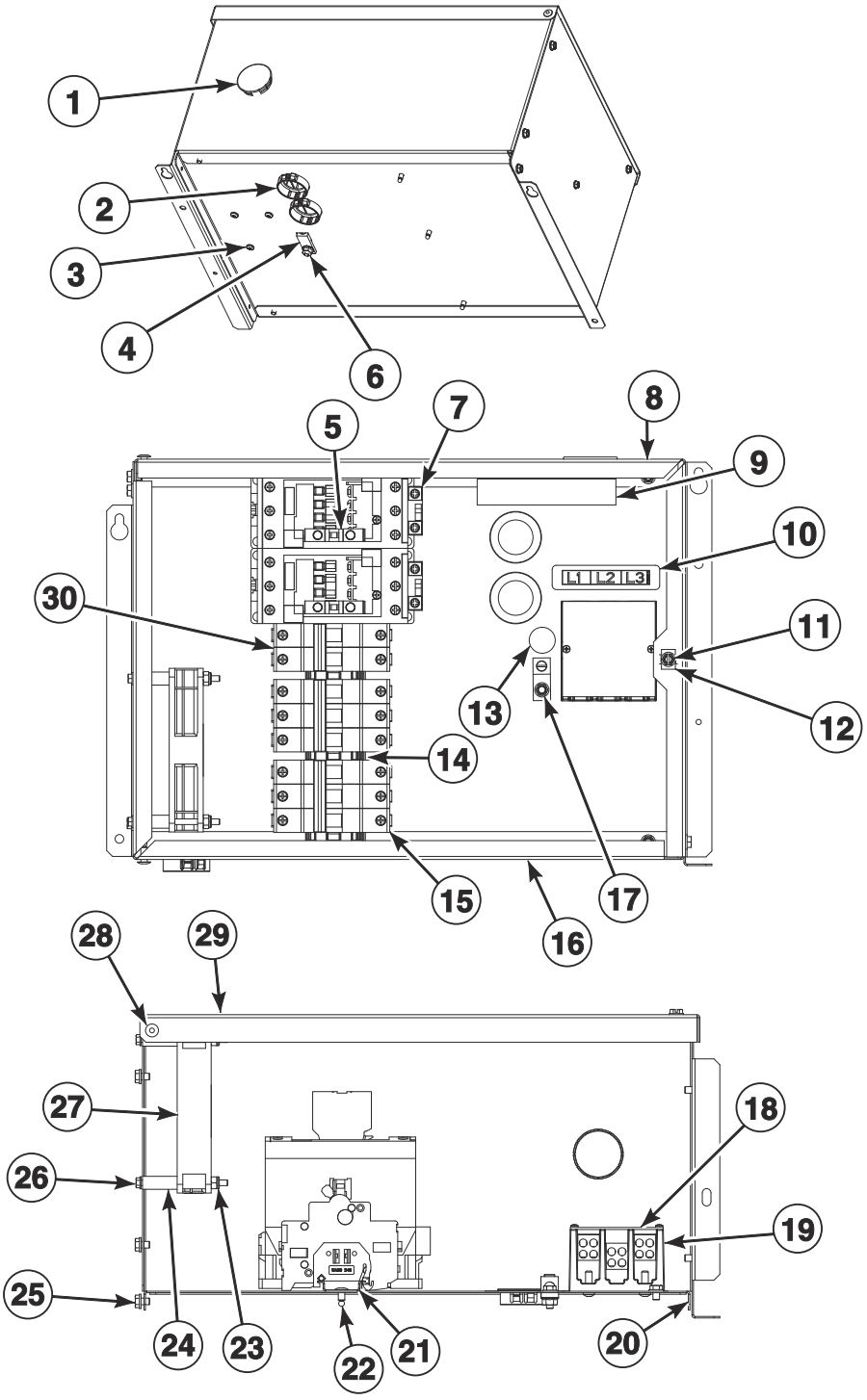

TMB3903P

© Copyright, Alliance Laundry Systems LLC – DO NOT COPY or TRANSMIT

Accessory Box - Electric 200-240 Volt Models

REF	PART NO.	DESCRIPTION	COMMENTS
	44375409	Harness	Contactor box to power distribution block/EMI filter; 1 phase
	44375410	Harness	Contactor box to power distribution block/EMI filter; 3 phase
	70639803	Harness	Power distribution block to contactor block
	70639804	Harness	Power distribution block to contactor block
	70639805	Harness	Contactor block to HC
	70632202	Harness	Contactor coil
	70630903	Harness	Contactor monitor
	70630904	Harness	IEC models; Contactor monitor
	70639812	Harness	Contactor to Element H1-H3
	70639813	Harness	Contactor to Element H4-H6
1	70180001	Plug	
2	M402542	Snap Bushing	3 required
3	39733	Screw	
4	M411283	Ground Lug Connector	
5	44313201	Auxiliary Contact Block	2 required
6	44088001	Nut	
7	70482801	Contactor	2 required
8	44365001	Contactor Box Top	
9	F8614501	Danger Label	
10	44286802	Wire Label	1 Phase; L1, L2 L1, N
	44286803	Label	3 Phase; L1, L2, L3
11	F8206901	Screw	
12	70030501	Expansion Clip	
13	D516100	Label	
14	F8449801	End Stop	3 required
15	70488104	Circuit Breaker	2 required; 50 amp
16	44364901	Contactor Box Bottom	
17	685837	Screw	
18	44014901P	Power Distribution Block Cover	
19	M413865	Power Distribution Block	
20	44365101	Contactor Box Base	
21	44229701	Din Rail	
22	70058501	Pop Rivet	
23	F430232	Nut	
24	44328601	Sleeve	2 required
25	51780	Screw	
26	70546902	Screw	
27	F8504301	Fan	
28	70058502	Pop Rivet	
29	44365301	Contactor Box Cover	
30	70488102	Circuit Breaker	25 amp

© Copyright, Alliance Laundry Systems LLC – DO NOT COPY or TRANSMIT

Accessory Box - Electric 380-480 Volt Models

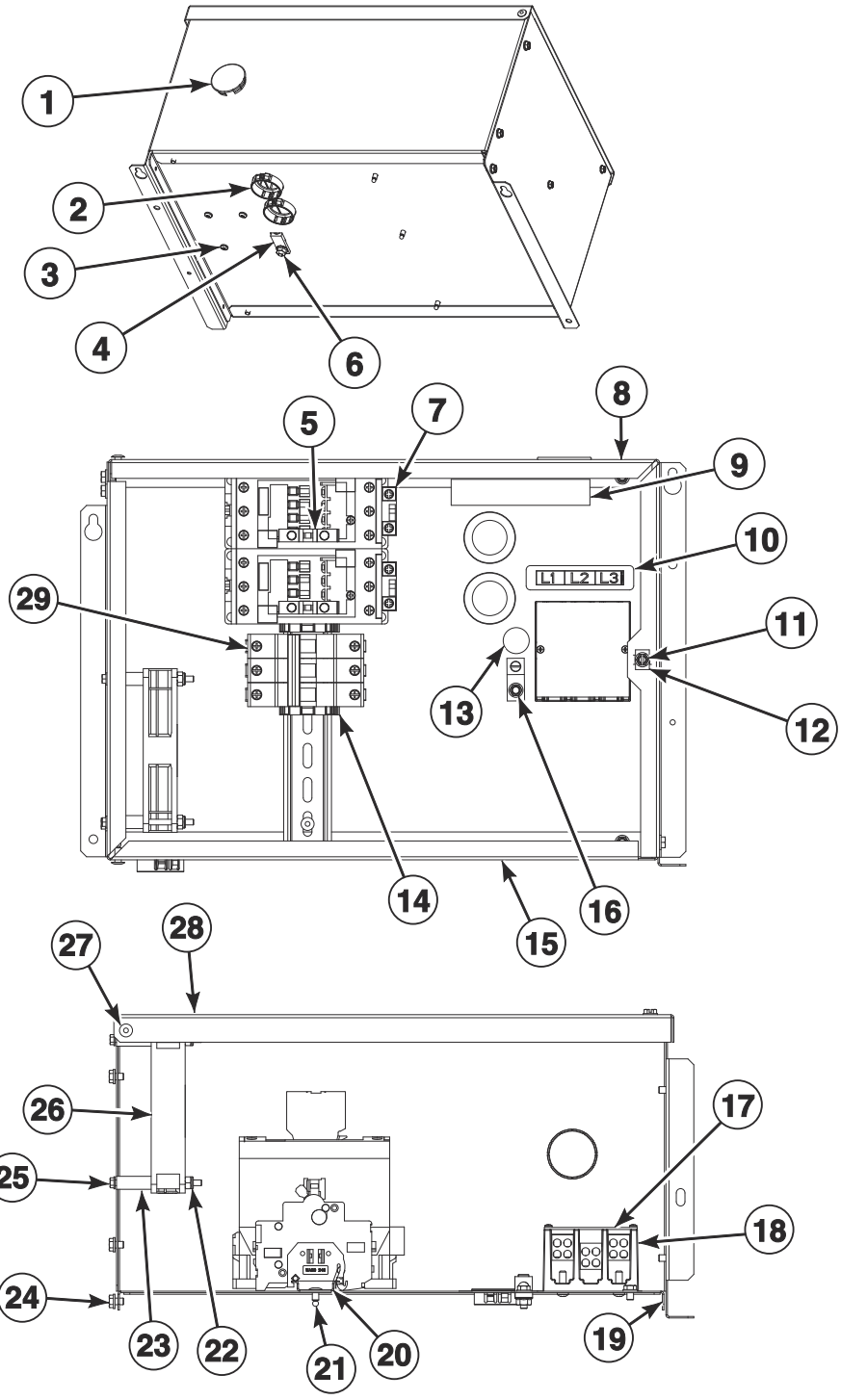

TMB3904P

© Copyright, Alliance Laundry Systems LLC – DO NOT COPY or TRANSMIT

Accessory Box - Electric 380-480 Volt Models

REF	PART NO.	DESCRIPTION	COMMENTS
	44375409	Harness	Contactor box to power distribution block/EMI filter; 1 phase
	44375410	Harness	Contactor box to power distribution block/EMI filter; 3 phase
	70639803	Harness	Power distribution block to contactor block
	70639804	Harness	Power distribution block to contactor block
	70639805	Harness	Contactor block to HC
	70632202	Harness	Contactor coil
	70630903	Harness	Contactor monitor
	70630904	Harness	IEC models; Contactor monitor
	70639812	Harness	Contactor to Element H1-H3
	70639813	Harness	Contactor to Element H4-H6
1	70180001	Plug	
2	M402542	Snap Bushing	3 required
3	39733	Screw	
4	M411283	Ground Lug Connector	
5	44313201	Auxiliary Contact Block	2 required
6	44088001	Nut	
7	70482801	Contactor	2 required
8	44365001	Contactor Box Top	
9	F8614501	Danger Label	
10	44286803	Label	3 Phase; L1, L2, L3
11	F8206901	Screw	
12	70030501	Expansion Clip	
13	D516100	Label	
14	F8449801	End Stop	2 required
15	44364901	Contactor Box Bottom	
16	685837	Screw	
17	44014901P	Power Distribution Block Cover	
18	M413865	Power Distribution Block	
19	44365101	Contactor Box Base	
20	44229701	Din Rail	
21	70058501	Pop Rivet	
22	F430232	Nut	
23	44328601	Sleeve	2 required
24	51780	Screw	
25	70546902	Screw	
26	F8504301	Fan	
27	70058502	Pop Rivet	
28	44365301	Contactor Box Cover	
29	70488101	Circuit Breaker	25 amp

© Copyright, Alliance Laundry Systems LLC – DO NOT COPY or TRANSMIT

Labels

PART NO.	DESCRIPTION	COMMENTS
44324201	Caution Label	Australian models; Repeat Ignition Reset
44318601	Caution Label	Vent/install
F8614501	Danger Label	Shock; English/French
F8614301	Hot Surface Warning Label	English/French
F8609001	Hot Surface Warning Label	Icon
F8611601	Warning Label	
44318600	Label Kit	Vent/install
F8614500	Label Kit	Shock
F8611600	Warning Label Kit	
44321501	Notice Label	120/240 Volt
70539601	Notice Label	
70534201	Notice Label	
F8609501	Notice Label	
D516073	Notice Label	Read instructions; Icon
70538401	Pinch Warning Label	English/French
F8615701	Pinch Warning Label	Icon
70536401	Warning Label	Lint; Australian models
44324101	Warning Label	Fire; Australian models
44321601	Warning Label	Risk of fire; Icon
44324001	Warning Label	Shock/pinch

© Copyright, Alliance Laundry Systems LLC – DO NOT COPY or TRANSMIT

Parts Index

A

Access Panel Trim
70399402 47

Accessory Plate Assembly
F8574202 31
F8574203 31
F8574205 31
F8734601 31

Adapter
44178801 ..... 77, 79

Adapter Harness
44375503 67

Air Exhaust Deflector
44308401 71

Air Filter
44104201 85

Airflow Switch and Arm Bracket
70319602 75

Airflow Switch Arm
70319401 75

Airflow Switch Assembly
70429602 75

Airflow Switch Vane
70319202 75

App Pay Overlay Kit
44374701 ..... 31, 33

Auxiliary Contact Block
44313201 ..... 89, 91

B

Baffle
44304601 53
44304701 53
44304702 53

Ball Bearing
44041901P 65, 69

Bearing
M413923P 65, 69

Blower Assembly
70302201P 71

Blower Housing Scroll
44303801 71

Blower Inlet Cone
70303101 71

Blower Motor Mounting Plate
44380401 71

Bolt
M400650 ..... 65, 69

Bottom Pan
44304301 53

Burner Assembly
M410541P 77

Burner Cover
44353901 79

Burner Grate
44354301 79

Burner Orifice
70684103 81
70684104 81
70684105 81
70684106 81
70684107 81
70684108 81
70684109 81
70684110 81
70684113 81
70684128 81
70684130 81
70684132 81
70684134 81
70684136 81
70684138 81
70684158 81

Burner Support
44110201 77
44341701 79
44341801 79

Bushing
70346501 ..... 73, 87

Bypass Harness
44334103 ..... 23, 31, 43

C

Card Reader Plate
F8574204 31

CARE Harness Bracket
44377401 87

Caution Label
44318601 92
44324201 92

Center Pan
44304201 53

Central Pay Board Power Supply Harness
70631705 87

Central Pay Control Assembly
204779 87

Circuit Breaker
70488101 91
70488102 89
70488104 89

Circuit Plug Housing, 1
26302 67

Coil
F8514601P 85
F8514701 85

Coin Box
F160673P 53

Coin Chute Assembly
70296401 53

Coin Drop
38963P 35
70441601 35
70441603 35

Coin Drop Assembly
201141 35
210195 35

N/A items do not appear in index.

© Copyright, Alliance Laundry Systems LLC – DO NOT COPY or TRANSMIT

210196 35
38462P 35
38463 35
38467 35
38519 35
70281102 35
70283102 35
70441602 35
70447301 35
70471601 35
70482401 35
70506901 35

Coin Drop Kit
CK077 35
CK097 35
CK122 37

Coin Identification Paper
38464P 35
38475 35
38725 35

Coin Meter
F0160737-00 35

Coin Vault and Emergency Stop Mount Assembly
70529502 53

Coin Vault Assembly
70529501 53

Coin Vault Switch Harness
44334101 43
44334104 ..... 23, 31

Cold Weather Kit
44340301 19

Conduit Plate
70615501 55
70615502 55

Contact Base
F8538101 41

Contact Switch
F8069501 41

Contactor
70482801 ..... 89, 91

Contactor Box Base
44365101 ..... 89, 91

Contactor Box Bottom
44364901 ..... 89, 91

Contactor Box Cover
44365301 ..... 89, 91

Contactor Box Top
44365001 ..... 89, 91

Control
70511601 19

Control Assembly
70478803P 23
70478804P 27
70478903P 23
70478904P 27
70479801 21
70479901 21
70523003P 23
70523004P 27
70523101 21
70543104 29
70597803 33
70697001P 31

Control Box Assembly
44180101 17

Control Box Base
44065301 19

Control Box Cover
44065201 19

Control Box Housing
44306701 19

Control Box Top
44307101 19

Control Box Wrap
44119101 17
44344101 17

Control Door and Studs Assembly
70570201 29

Control Door Latch
431318 53

Control Harness
44375604 19

Control Housing Cover
70307005 ..... 17, 39

Control Mounting Bracket
70598601 31

Control Panel
44000125 45
44000130DG 45
44000130W 45
44040013 45
44040015LG 45
44040015W 45
44344001 45
44344002 45
44388603 45
44388606W 45
44388701 45
44388702 45
44388703W 45
44388704W 45

Control Plate
70497101 ..... 21, 27

Control Plate and Studs Assembly
70496601 23

Control Plate Assembly
70497201 23

Control Screen Replacement Kit
F8647701P 31, 33

Control Tray
44364101 87

Control Tray Guard
44363801 55

Control Trim
44016401 43
70529401 43

Conversion Kit
70696802 87
70696806 87

Cylinder and Trunnion Assembly
44195601 63
44195602 63
44195603 63
44195605P 63
44195606 63
44195607 63

Cylinder Assembly
44130802 63
44196301 63
44196302 63

N/A items do not appear in index.

© Copyright, Alliance Laundry Systems LLC – DO NOT COPY or TRANSMIT

44196303 63
Cylinder Kit
44057001P 63
44057101P 63
Cylinder Rib
M403002 63
44076201 63
Cylinder Rib Assembly
44191201 63

D

Damper Assembly
44280301 71
Danger Label
F8614501 ..... 89, 91, 92
Din Rail
44229701 ..... 89, 91
DIN Valve Adapter Kit
F8382301 85
Door Assembly
44354701 57
44354702P 57
44354703 57
44354704 57
44354705 57
44354706 57
44354707 57
44354708 57
44354709 57
44354710LG 57
44354711B 57
44389101 57
44389102 57
44389103 57
44389104 57
Door Catch Kit
70482901 43
Door Glass
44008401P 59
44008405 59
Door Glass Installation Tool
M4221P4 59
Door Glass Label
70650401 59
70707701 59
Door Handle
44007901 59
44263801 59
44370601 59
Door Hinge Assembly
70596603 61
70596604 61
70596608 61
70596614B 61
70596614LG 61
70596614W 61
Door Hinge Lug Assembly
70597601 61
70597602 61
70597603 61
Door Latch
M401223 43
Door Ring Assembly
44354801 59
44354802 59
44354803 59
44354804 59
44354807B 59
44354808LG 59
44354809B 59
70689103 59
70689104 59
Door Ring Gasket
44008201P 59
70296802 59
Door Seal Kit
70211902P 59
Door Switch Actuator
70532105 61
70727901 61
Door Switch Harness
44366201 43
Drive Access Cover
70202501 55
Drive Motor
44355005P 69
44355006P 69
Drive Rivet
M400713 19

E

Electric Stove Assembly
44252501 83
Electric Wrap
44364702 83
Electronic Coin Drop Assembly
70294107 35
70513302 35
70513303 35
70513304 35
70513306 35
70513309 35
70513310 35
70513311 35
70513312 35
70513313 35
70513314 35
70513315 35
70513316 35
70513318 35
Electronic Coin Drop Kit
CK099 37
CK100 37
CK101 37
CK109 37
CK110 37
CK113 37
CK115 37
CK116 37
CK117 37
CK118 37
CK119 37
CK120 37
CK121 37
CK125 37

N/A items do not appear in index.

© Copyright, Alliance Laundry Systems LLC – DO NOT COPY or TRANSMIT

Emergency Stop Button Kit
70580301 41
Emergency Stop Bypass Harness
F8519403 ..... 23, 31
Emergency Stop Harness
44272401 41
Emergency Stop Interconnect Harness
70631102 41
Emergency Stop Label
44012901 41
44012903 41
Emergency Stop Mounting Bracket
70550401 41
Emergency Stop Pushbutton
F200233500 41
EMI Filter
F8591601 73
F8637501 73
End Stop
F8449801 ..... 89, 91
Exhaust Pipe Assembly
44327901 71
Expansion Clip
70030501 ..... 23, 31, 33, 43, 73, 87, 89, 91
Extension Spring
F8440701 69

F

Fan
F8504301 ..... 89, 91
Fan Motor
44354901P 71
44354903P 71
44402301P 71
Fan Spacer
70599301 71
Felt Pad
M402144 63
Fill Hose
202799 19
202800 19
Filter
44172001 85
Filter Mounting Plate
70551701 19
Fob Communication Harness
F8519403 31
F8719301 23
Fob Reader Control Assembly
205135 ..... 23, 31
Fob Reader Kit
70666806 39
Front Panel
44052532 47
44052533DG 47
44052533W 47
44052535 47
44052536DG 47
44052536W 47
44052538 47
44052539DG 47
44052539LG 47
44052539W 47
44052541 47
44052542DG 47
44052542LG 47
44052542W 47
44346305 47
44346306 47
44346307 47
44346308 47

G

Gas Burner
70229801P 79
Gas Heater Assembly
44352601 79
Gas Stove Assembly
44136004 77
Gas Valve
44154501P 77, 79
44154502P 77, 79
44154505 ..... 77, 79
44154506 ..... 77, 79
44178301P 77, 79
44178302P 77, 79
44298501 ..... 77, 79
44298504 ..... 77, 79
Gas Valve Bracket
44175703 77
44340701 79
Gas Valve Harness
44273501 ..... 77, 79
44273502 ..... 77, 79
Gas Valve/Thermostat Harness
44366301 ..... 77, 79
Gasket
70289101P 49
Ground Lug Connector
M411283 ..... 73, 89, 91
Guard
44363601 55
44377301 55

H

Handle and Caps Assembly
70154405P 49
70154415 49
Handle Bar
70399501B 59
Handle Bumper
70407202 49
70407210 49
Harness
F8617901 29
44366302 83
44375401 73
44375402 73
44375409 ..... 89, 91
44375410 ..... 89, 91
70630903 ..... 89, 91
70630904 ..... 89, 91
70632202 ..... 89, 91

N/A items do not appear in index.

© Copyright, Alliance Laundry Systems LLC – DO NOT COPY or TRANSMIT

70639803 ..... 89, 91
70639804 ..... 89, 91
70639805 ..... 89, 91
70639812 ..... 89, 91
70639813 ..... 89, 91
Harness Adapter Plate
70523301 19
Harness Strap
55881 67
Heat Control Harness
44374901 87
Heater Element
M410939P 83
M410940P 83
M410941P 83
M412955P 83
Heating Element Screen
44308801 83
High Altitude Orifice Kit
44357501 81
44357502 81
High Voltage Suppression Cable
44239704 ..... 77, 79
Hinge Cam Kit
M4772P3 61
M4773P3 61
70622401 61
Hold-Down Clip
35865 51
Hose
44073304 19
Hose Clamp
36801 19
Hose Fitting
44069101 19
Hot Surface Warning Label
F8609001 92
F8614301 92
Housing and Trunnion Assembly
M4644P3 65
44336302 65

I

Idler Shaft
44303102 69
Idler Spacer
44306801 69
Igniter Cover
70159601 ..... 77, 79
Ignition Control
70482001 87
70482002P 87
Insulation
44150102 53
44150103 53
Insulator
M413862 73
Interconnect Harness
44375601 19
Interface Harness
44378104 ..... 23, 31
Inverter Control Assembly
70603002 73
70603201 73
Inverter Control Power Harness
44375701 73
44375703 73
44375704 73
44375706 73
Inverter Drive Tray
44364201 73
Inverter Power Conversion Harness
70671001 73
Inverter to Motor Harness
70635405 69
70635406 69
70635407 69
70635408 69
I/O Control Assembly
70671701 87

J

Jumper Harness
D511476 43
70639808 83
70639809 83
Jumper Strip
M400869 83

K

Key
M400008 ..... 63, 69
44309301 69
70155601 ..... 19, 43
70155602 43
Kickplate
70117607 49
70117619 49

L

Label
D503887 ..... 77, 79
D516100 ..... 73, 89, 91
44190901 47
44286801 73
44286803 ..... 73, 89, 91
44318201 19
562738 45
70414001 47
70472801 47
70537001 47
70537101 47
Label Kit
F8614500 92
44318200 19
44318600 92
44324500 19
70534400 47
Latch Mounting Bracket
44003201 53

N/A items do not appear in index.

© Copyright, Alliance Laundry Systems LLC – DO NOT COPY or TRANSMIT

Lead-In Pipe
44377001 77
44377101 77
Lead-In Pipe Kit
44377001 79
44377101 79
Leveling Leg Locknut Wrench
205655 53
Light
801432 19
Limit Offset Bracket
44226101 83
Limit Thermostat
44328003 71
44328005 79
44328006 83
44328007 77
70530905 71
Lint Bracket
44325301 51
Lint Clip Bracket
44140202 51
Lint Door Switch Harness
44362702 49
Lint Panel
44293602 49
44293603LG 49
44293603W 49
44293604DG 49
44293604W 49
44293605 49
44298102 51
44300901 51
Lint Screen
44063601 51
Lint Screen Clip
H96418413 51
Lint Screen Top Rail
44298901 51
Lock, Key and Nut Kit
70722301 43
70733701 ..... 19, 43
Low Pressure Steam Cover
M400828 85
Lower Guard
44363501 55
44363901 55
44363902 55
Lower Rear Panel
44380501 53
L.P. Conversion Kit
44328801 77
44328809 77
44328810 79
44330301 77
44330306 79
44355201 79

M

Machine ID Control Assembly
203361P 23, 27, 29, 31, 33
Magnet
70343101 49
Magnet Bracket
44290501 49
Main Harness
44363301 17
70707901 ..... 23, 31, 33
Max Fill Line Label
70707501 59
Micro V Pulley
44374001 69
Mixing Valve
70519801 19
Mixing Valve Shield Bracket
44306601 19
Moisture Sensing Harness Kit
44344702 67
Moisture Sensor Harness
44375501 67
Motor Pivot Bracket Weldment
44327001 69
Motor Pivot Plate Weldment
44311501 69
Motor Pivot Support Bracket
44325801 69
Mounting Bracket
44376601 19
Mounting Plate
70208801 23

N

Nameplate
F8443106 45
F8688001 45
F8688901 45
567293 45
567887 45
Nameplate Overlay
44130301 45
44144401 59
70410201 45
70411401 59
Notice Label
D516073 92
F8609501 92
44321501 92
70534201 92
70539501 ..... 77, 79
70539601 92
Notice label
70544901 ..... 77, 79
Nut
F430232 ..... 89, 91
M400026 ..... 65, 69
M400033 ..... 67, 69
M400977 43
M404993 63
M414215 59
21899 53
23951 49
36020 85
44071201 29
44087101 ..... 31, 33
44088001 ..... 59, 61, 89, 91
44333202 69

N/A items do not appear in index.

© Copyright, Alliance Laundry Systems LLC – DO NOT COPY or TRANSMIT

51236 49
70030401 ..... 43, 53, 61
70054 ..... 23, 31, 83
70688901 71

O

Opto Coupler
200674P 35
Orifice Adapter
44340802 79
Orifice Adapter Support
44342101 79
Overlay
F8205101 23
F8733901 23
F8734001 31
F8734201 23
F8734301 31
F8736501 23
F8736601 31
70295101 23
70518101 23
70518102 23
70519001 21
70519002 21
70539101 21
70539102 21
70541201 25
70541202 25
70541203 25
70545501 21
70545502 21
70547501 21
70547502 21
70547801 27
70547802 27
70548801 27
70548802 27
70556201 23
70556301 23
70556401 23
70556402 23
70556501 23
70556502 23
70556601 23
70556701 23
70556801 23
70556901 23
70557001 23
70557002 23
70571101 25
70571102 25
70571103 25
70571401 27
70571402 27
70571601 27
70571602 27
70595401 29
70626001 25
70626002 25
70626101 25
70673301 27
70673302 27
70675001 21
70675002 21
70679201 25
70681701 25
70681702 25
70681703 25
70681704 25
70681705 25
70690401 25
70690402 25
70690403 25
70690404 25
70690405 25
70690701 25
70690702 25
70690703 25
70691001 27
70691002 27
70691301 21
70691302 21
70705701 25

P

Panel Locator
56079 ..... 43, 49, 87
Pin
70071401 61
Pinch Warning Label
F8615701 92
70538401 92
Pipe Bracket
44327601 55
44327603 55
Plug
70167601 ..... 77, 79
70180001 ..... 19, 89, 91
Pop Rivet
M400003 ..... 53, 73, 87
44166601 43
70058501 ..... 49, 53, 61, 89, 91
70058502 ..... 89, 91
70126301 49
70126401 49
70412601 59
Porcelain Touch-Up Paint
122P4P 53
Power Distribution Block
M413865 ..... 89, 91
Power Distribution Block Cover
44014901P 89, 91
Power Sensor Harness
44375602 19
44375603 19
Pressure Fitting
44231601 ..... 77, 79
Primary Transformer Vend Harness
70631703 87
70631704 87
Pulley
44289502 69
Pushbutton Switch
70413301 ..... 21, 23, 27, 31, 33, 43
Push-to-Start Switch
801434W 19

N/A items do not appear in index.

© Copyright, Alliance Laundry Systems LLC – DO NOT COPY or TRANSMIT

R

Rear Access Plate
44136101 77
Rear Guard
44373401 55
44373501 55
44376701 19
Rear Main Harness
44362701 87
Reed Switch Assembly
F8066804 49
Rib Rod
M401411 63
RIb Wire
44208601 67
Rivet
70743501 49
Roller Bracket Assembly
70404001 49
Roller Catch Arm
70030301 49
Roller Catch Spacer
70030201 49
Roller Catch Wheel
70297601 49

S

Screw
F8206901 ..... 39, 55, 73, 87, 89, 91
M400063 65
M400661 59
M402797 77
M411072 ..... 23, 43
23008 85
33562 83
39733 ..... 31, 33, 49, 87, 89, 91
430497 ..... 17, 19, 53, 55, 75, 77, 79, 83
430757 ..... 49, 75
431287 53
44338901 67
44349101 61
44364601 71
44364602 69
51780 ..... 19, 29, 53, 87, 89, 91
51783 ..... 73, 87
685837 ..... 73, 89, 91
70033502 ..... 43, 61
70072801 49
70132301 49
70182601 43
70187201 ..... 65, 69
70240301 ..... 77, 83
70247701 53
70275801 43
70407301 61
70436301 61
70442101 ..... 59, 67
70546902 ..... 89, 91
70576101 61
70607603 61
804608 ..... 19, 21, 23, 27, 29
805213 69
Sensor Harness
44375606 19
Serial Pay Harness
F8713906 31
Shaft Collar
70467001 69
Shaft Wire
44208702 67
Shield
44326801 19
Shock Warning Label
F8614201 19
F8614401 19
Side Panel
44367502DG 53
44367502LG 53
44367502W 53
44367602DG 53
44367602LG 53
44367602W 53
Sleeve
44328601 ..... 89, 91
Slip Ring Assembly
44222702 67
Slip Ring Holder
44224401 67
Slot Card Plate Assembly
44089501 23
Snap Bushing
D503235 17
M402542 ..... 89, 91
Spacer
M401402 63
Spark Electrode
44328701P 77
70548701P 79
Spray Paint
298P4P 53
Spud Holder Weldment
44263103 77
Steam Adaptor Kit
44314701 85
Steam Coil
M400637P 85
44256301 85
Steam Control Assembly
70501801 87
Steam Control Harness
44378001 87
Steam Harness Bracket
44376801 55
Steam Heater Assembly
44020401P 85
44020402 85
Steam Stand Box
44007501 85
Steam Valve
F8322904P 85
Steam Valve Harness
F8520703 85
Stove Grate
44300301 55
44300302 55
44364801 55

N/A items do not appear in index.

© Copyright, Alliance Laundry Systems LLC – DO NOT COPY or TRANSMIT

Stove Limit Bypass Harness
44366303 ... 85
Strain Relief
44304801 ... 85
Switch
70411901 ... 75
Switch Bracket
44296101 ... 49
Switch Hole Plug
44057801B ... 43
44057801LG ... 43
44057801W ... 43

T

Terminal
00622SG ... 73, 87
Terminal Block
430642 ... 73
Terminal Block Shield
70333001 ... 73
Thermistor
M414704 ... 71
44064701 ... 53
Thermistor Plate
44068101 ... 53
44068102 ... 53
Thermostat Opening Cover
44312501 ... 71
Top Cover
44368801 ... 53
Top Cover Pan
44135001P ... 53
Top Guard
44364001 ... 55
44364002 ... 55
Top Pan
44304101 ... 53
44345101 ... 53
44352401 ... 53
Top Panel
44346201 ... 53
44346202 ... 53
Top Panel Bracket
44368201 ... 53
Transformer
F8491101 ... 73
202757 ... 87
202758 ... 87
Trunnion and Bearing Assembly
M4640P3 ... 65
44336301 ... 65
Trunnion Assembly
44207901P ... 63
44208001P ... 63
44375001P ... 65, 69
Trunnion Housing
M413826P ... 69
Tumbler Dolly Kit
M4379P4 ... 43

U

Upper Guard
44374301 ... 55
Upper Rear Panel
44376901 ... 53
USB Bracket
70547001 ... 29
USB IR Interface Kit
203346 ... 39
USB-Serial Interface Assembly
203440 ... 29, 31, 33

V

Valve
F8322906P ... 85
Valve Rebuild Kit
F8379502 ... 85
V-Belt
44309402 ... 69
44333301 ... 69
Vend Activation Harness
44334002 ... 31
44334004 ... 21, 23, 27
Vend Plate
F8632501 ... 31

W

Warning Label
F8611601 ... 92
44321601 ... 92
44324001 ... 92
44324101 ... 92
44324501 ... 19
44324502 ... 19
70534401 ... 47
70534402 ... 47
70534405 ... 47
70536401 ... 92
Warning Label Kit
F8611600 ... 92
Washer
F431131 ... 71
M400015 ... 63, 65
20103 ... 65, 69
44238902 ... 67
70261401 ... 65, 69
70409301 ... 59
Water Valve Harness
44375605 ... 19
Wire Clip
F8449501 ... 87
F8449502 ... 73
Wire Guard
201595P ... 35
Wire Label
44286802 ... 89
44286804 ... 73
Wireless Control Label
204692 ... 31, 33, 39
Wireless Network Control Assembly
807211 ... 39
Wireless Network Harness
F8674006 ... 39
Wireless Network Kit
70609701 ... 39
Wireway Channel
44239101 ... 67

N/A items do not appear in index.

© Copyright, Alliance Laundry Systems LLC – DO NOT COPY or TRANSMIT

Notes

© Copyright, Alliance Laundry Systems LLC – DO NOT COPY or TRANSMIT