Tumble Dryers

75 Pound Capacity

18 Digit Model Numbers with 6 in 13th Position

Refer to Page 5 for Model Numbers

Parts

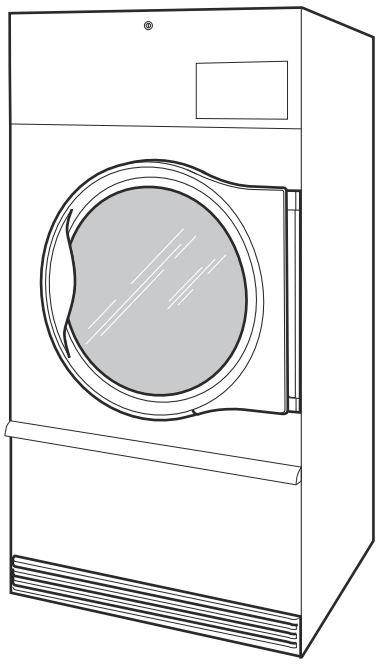

TMB1290C

Alliance™ Laundry Systems

www.alliancelaundry.com

Part No. 70698601R9
November 2025

Table of Contents

Title	Page
Parts Ordering Information	3
Serial Plate Location	3
Machine Identification	5
Product Overview - Heat Source, Voltage and Position 16	6
Product Overview - FN Control Suffix	8
Product Overview - DN and NN Control Suffixes	10
Product Overview - N and W Control Suffixes	12
Product Overview - V Control Suffix	14
Control Box	16
Fire Suppression System Control Box	18
Dual Digital Control	20
Electronic Display Control - Vend Models with N or W in the 7th Position	22
Electronic Display Control Overlays- Vend Models with N or W in the 7th Position	24
Electronic Display Control - OPL Models with N in the 7th Position	26
3.5 Inch Graphical Control	28
Touch Control - Vend Models with V in the 7th Position	30
Touch Control - OPL Models with V in the 7th Position	32
Coin Drops	34
Coin Drop Kits	36
Network Board Components	38
Emergency Stop Button - IEC OPL Models	40
Cabinet Front Components	42
Control Panels and Nameplates	44
Front Panel Assemblies	46
Lower Cabinet Front Components	48
Lint Panel Components	50
Cabinet Components (Drawing 1 of 2)	52
Cabinet Components (Drawing 2 of 2)	54
ProCapture Components	56
Rear Panel and Belt Guard Components	58
Door Assemblies	60
Door Components	62
Hinge Components	64
Cylinder and Trunnion Components	66
Bearing Components	68
Moisture Sensing Components	70
Drive Motor Components	72
Blower and Exhaust Components	74
Inverter Tray Components	76
Airflow Switch Assembly	78
Gas Heater Components - All Models with D, F, N and W in the 7th Position and U Models with V in the 7th Position	

© Copyright 2025, Alliance Laundry Systems LLC

All rights reserved. No part of the contents of this book may be reproduced or transmitted in any form or by any means without the expressed written consent of the publisher.

80
Gas Heater Components - Models with V in the 7th Position 82
Gas Heater Components - ProCapture Models 84
Burner Orifices - All Models with D, F, N and W in the 7th Position and U Models with V in the 7th Position 86
Burner Orifices - Models with V in the 7th Position 88
Electric Heater Components 90
Steam Heater and Valve 92
Control Tray 94
Accessory Box - Electric 200-240 Volt Models 96
Accessory Box - Electric 380-480 Volt Models 98
Labels 100
Parts Index 101

© Copyright, Alliance Laundry Systems LLC – DO NOT COPY or TRANSMIT

Parts Ordering Information

If literature or replacement parts are required, contact the source from whom the machine was purchased or contact Alliance Laundry Systems at (920) 748-3950 for the name and address of the nearest authorized parts distributor.

For technical assistance, call the number listed below:

(920) 748-3121 Ripon, Wisconsin

Serial Plate Location

When calling or writing about your product, be sure to mention model and serial numbers. Model and serial numbers are located on serial plate(s) as shown.

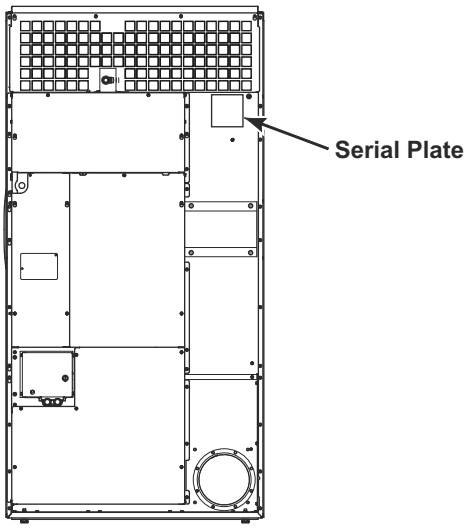

TMB3888P

© Copyright, Alliance Laundry Systems LLC – DO NOT COPY or TRANSMIT

Notes

© Copyright, Alliance Laundry Systems LLC – DO NOT COPY or TRANSMIT

Machine Identification

Information in this manual is applicable to these machines:

BA075E
BA075F
BA075L
BA075M
BA075N
BA075R
BA075S
BG075D
BG075E
BG075F
BG075L
BG075M
BG075N
BG075R
BG075S
BH075E
BH075F
BH075L
BH075M
BH075N
BH075R
BH075S
BJ075D
BJ075E
BJ075F
BJ075L
BJ075M
BJ075N
BJ075R
BJ075S
BK075E
BK075F
BK075L
BK075N
BK075R
BR075E
BR075S
BT075D
BT075E
BT075F
BT075L
BT075M
BT075N
BT075R
BT075S
BU075E
BU075F
BU075L
BU075M
BU075N
BU075R
BU075S
HA075E
HA075F
HA075L
HA075M
HA075N
HA075R
HA075S
HG075D
HG075E
HG075F
HG075L
HG075M
HG075N
HG075R
HG075S
HH075E
HH075F
HH075L
HH075M
HH075N
HH075R
HH075S
HJ075D
HJ075E
HJ075F
HJ075L
HJ075M
HJ075N
HJ075R
HJ075S
HK075E
HK075F
HK075L
HK075N
HK075R
HR075E
HR075S
HT075C
HT075D
HT075E
HT075F
HT075L
HT075M
HT075N
HT075R
HT075S
HU075E
HU075F
HU075L
HU075M
HU075N
HU075R
HU075S
JU075E
JU075N
PA075E
PA075L
PA075M
PA075N
PA075S
PG075E
PG075L
PG075M
PG075N
PG075S
PH075E
PH075L
PH075M
PH075N
PH075S
PJ075E
PJ075L
PJ075M
PJ075N
PJ075S
PK075E
PK075L
PK075N
PR075E
PR075S
PT075C
PT075E
PT075L
PT075M
PT075N
PT075S
PU075E
PU075L
PU075M
PU075N
PU075S
SA075E
SA075F
SA075L
SA075M
SA075N
SA075R
SA075S
SG075D
SG075E
SG075F
SG075L
SG075M
SG075N
SG075R
SG075S
SH075E
SH075F
SH075L
SH075M
SH075N
SH075R
SH075S
SJ075D
SJ075E
SJ075F
SJ075L
SJ075M
SJ075N
SJ075R
SJ075S
SK075E
SK075F
SK075L
SK075N
SK075R
SR075E
SR075S
ST075C
ST075D
ST075E
ST075F
ST075L
ST075M
ST075N
ST075R
ST075S
SU075E
SU075F
SU075L
SU075M
SU075N
SU075R
SU075S
UA075E
UA075F
UA075L
UA075M
UA075N
UA075R
UA075S
UG075D
UG075E
UG075F
UG075L
UG075M
UG075N
UG075R
UG075S
UGF75L
UGF75N
UH075E
UH075F
UH075L
UH075M
UH075N
UH075R
UH075S
UJ075D
UJ075E
UJ075F
UJ075L
UJ075M
UJ075N
UJ075R
UJ075S
UK075E
UK075F
UK075L
UK075N
UK075R
UR075E
UR075S
UT075C
UT075D
UT075E
UT075F
UT075L
UT075M
UT075N
UT075R
UT075S
UTF75L
UTF75N
UU075E
UU075F
UU075L
UU075M
UU075N
UU075R
UU075S

© Copyright, Alliance Laundry Systems LLC – DO NOT COPY or TRANSMIT

Product Overview - Heat Source, Voltage and Position 16

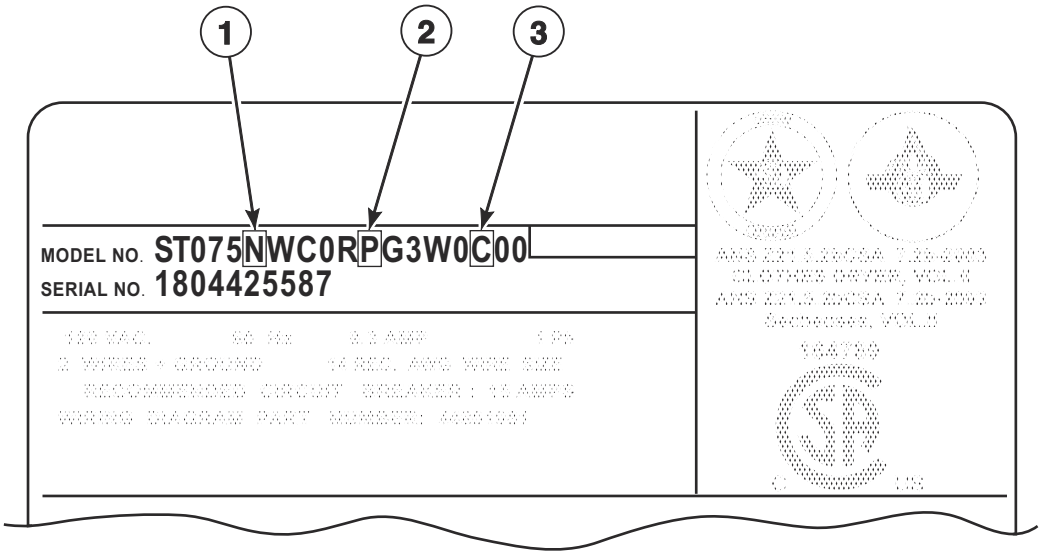

TMB3980P

© Copyright, Alliance Laundry Systems LLC – DO NOT COPY or TRANSMIT

Product Overview - Heat Source, Voltage and Position 16

REF	PART NO.	DESCRIPTION	COMMENTS
1	-	Heat Source	C: Steam (CRN) D: Liquid Petroleum Gas (L.P.) E: Electric F: Reduced Electric (Eco Line) L: Liquid Petroleum Gas (L.P.) M: Medium Electric N: Natural Gas (N.G.) R: Reduced Gas, Natural Gas (Eco Line) S: Steam
2	-	Voltage	B:100-120 Volt/50-60 Hertz/1 Phase; Gas and steam models F: 200-208 Volt/50-60 Hertz/3 Phase; Electric models G: 230-240 Volt/50-60 Hertz/3 Phase; Electric models H: 380 Volt/50-60 Hertz/3 Phase; Electric models J: 400-415 Volt/50-60 Hertz/3 Phase; Electric models K: 440 Volt/50-60 Hertz/3 Phase; Electric models L: 460-480 Volt/50-60 Hertz/3 Phase; Electric models N: 440-480 Volt/50-60 Hertz/3 Phase; Gas and steam models P: 380-415 Volt/50-60 Hertz/3 Phase; Gas and steam models Q: 200-240 Volt/50-60 Hertz/3 Phase; Gas and steam models X: 200-240 Volt/50-60 Hertz/1-3 Phase; Gas and steam models
3	-	Crating/ProCaptureTM	0: Film A: Slat C: ProCapture (lint management system)

© Copyright, Alliance Laundry Systems LLC – DO NOT COPY or TRANSMIT

Product Overview - FN Control Suffix

All Models Except J Models; OPL

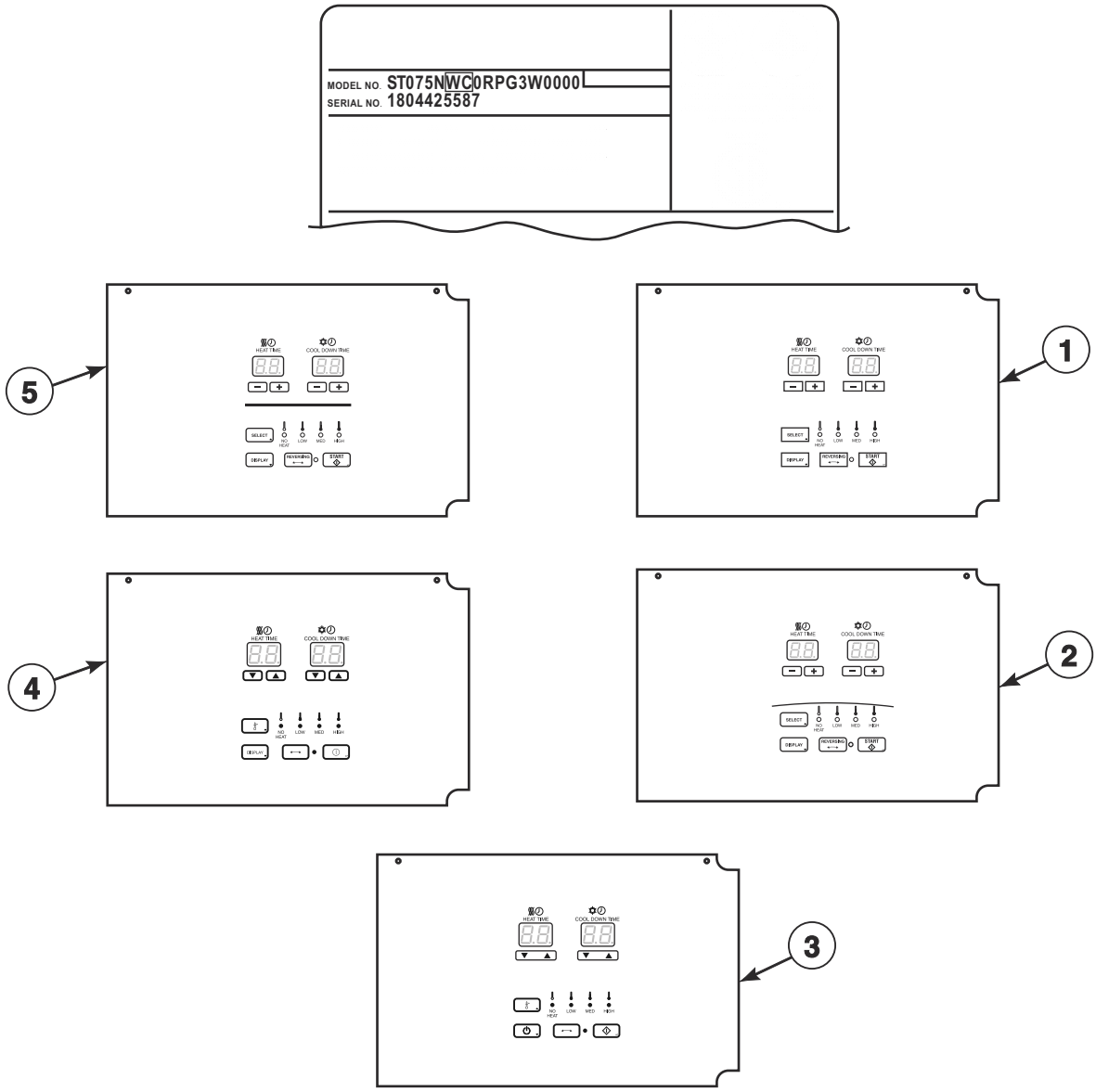

TMB3596P

© Copyright, Alliance Laundry Systems LLC – DO NOT COPY or TRANSMIT

Product Overview - FN Control Suffix

REF	PART NO.	DESCRIPTION	COMMENTS
1	-	Dual Digital Control	H models
2	-	Dual Digital Control	U models
3	-	Dual Digital Control	B models
4	-	Dual Digital Control	P models
5	-	Dual Digital Control	S models

© Copyright, Alliance Laundry Systems LLC – DO NOT COPY or TRANSMIT

Product Overview - DN and NN Control Suffixes

All Models Except J Models; OPL

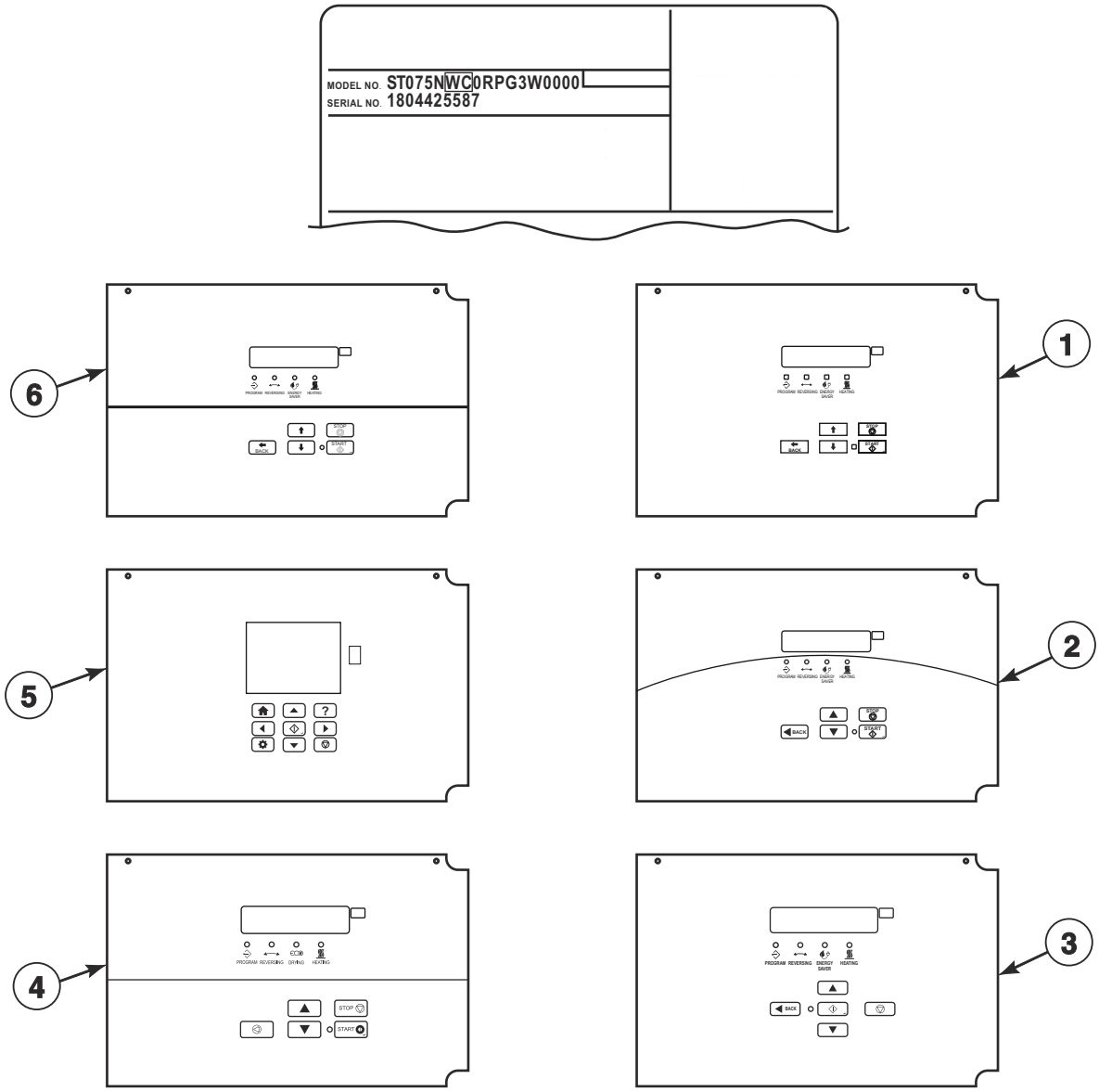

TMB3597P

© Copyright, Alliance Laundry Systems LLC – DO NOT COPY or TRANSMIT

Product Overview - DN and NN Control Suffixes

REF	PART NO.	DESCRIPTION	COMMENTS
1	-	Galaxy Control	H models
2	-	M-Series Control	U models
3	-	OPTimum Control	B models
4	-	OPL Micro Control	P models
5	-	UniLinc Control	U models
6	-	Quantum Gold Control	S models

© Copyright, Alliance Laundry Systems LLC – DO NOT COPY or TRANSMIT

Product Overview - N and W Control Suffixes

7th Position of the Model Number; All Models Except U Models; Vend

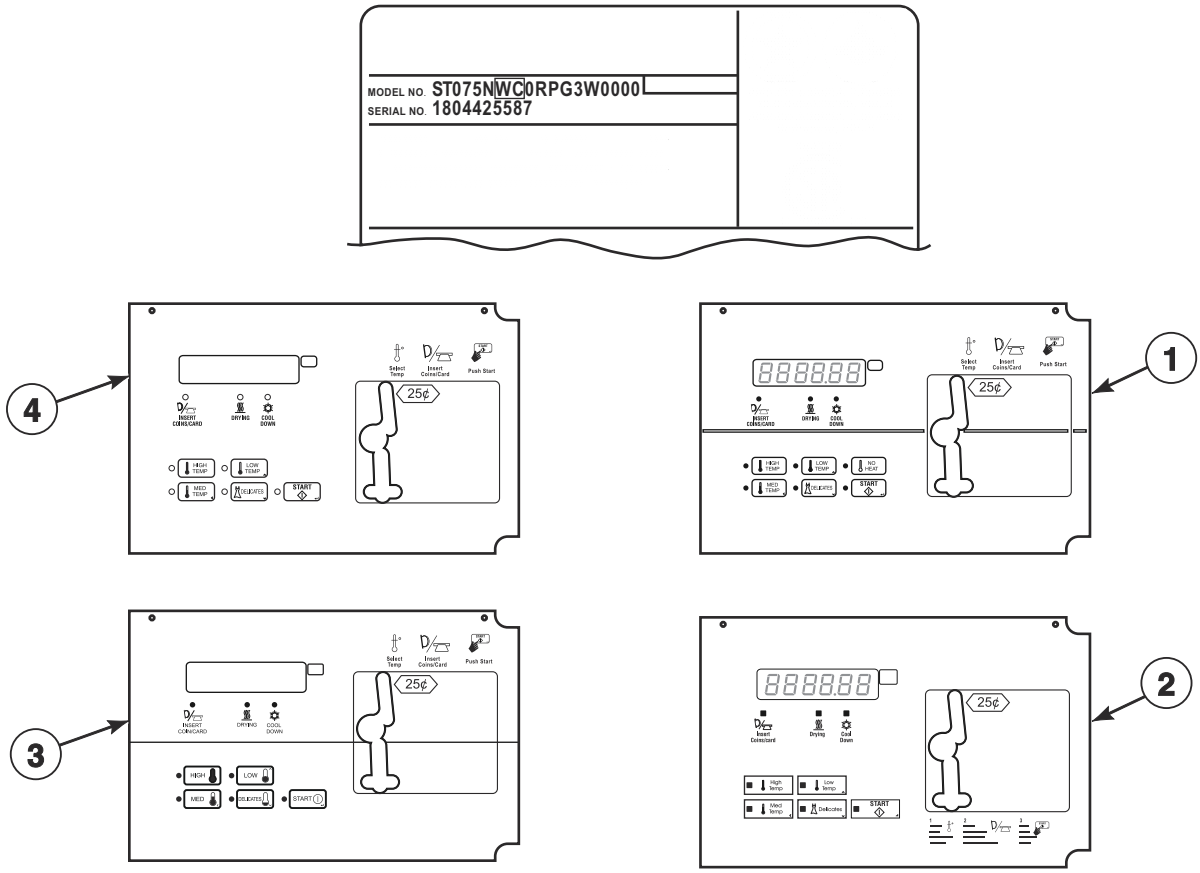

TMB3905P

© Copyright, Alliance Laundry Systems LLC – DO NOT COPY or TRANSMIT

Product Overview - N and W Control Suffixes

REF	PART NO.	DESCRIPTION	COMMENTS
1	-	Quantum Gold Control	S models
2	-	Galaxy 600	H models
3	-	XQ Control	P models
4	-	EVO7S Control	B models

© Copyright, Alliance Laundry Systems LLC – DO NOT COPY or TRANSMIT

Product Overview - V Control Suffix

7th Position of the Model Number; Vend and OPL

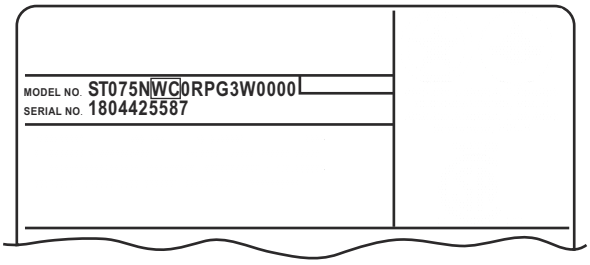

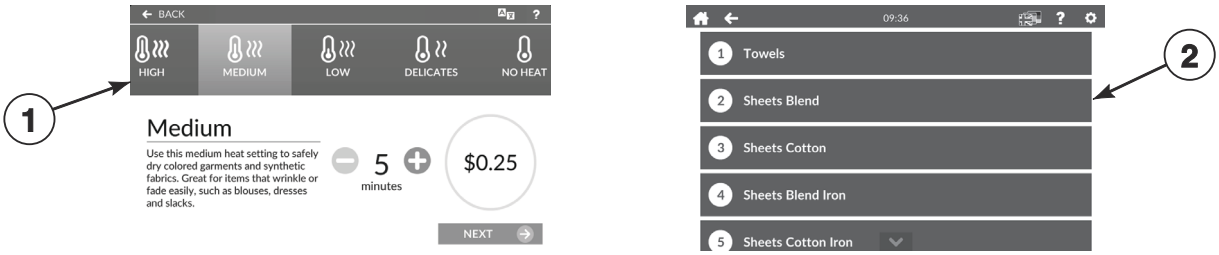

TMB3907P

© Copyright, Alliance Laundry Systems LLC – DO NOT COPY or TRANSMIT

Product Overview - V Control Suffix

REF	PART NO.	DESCRIPTION	COMMENTS
1	-	Touch Control	Vend; B, H, P and S models
2	-	Touch Control	OPL; B, J, P and U models

© Copyright, Alliance Laundry Systems LLC – DO NOT COPY or TRANSMIT

Control Box

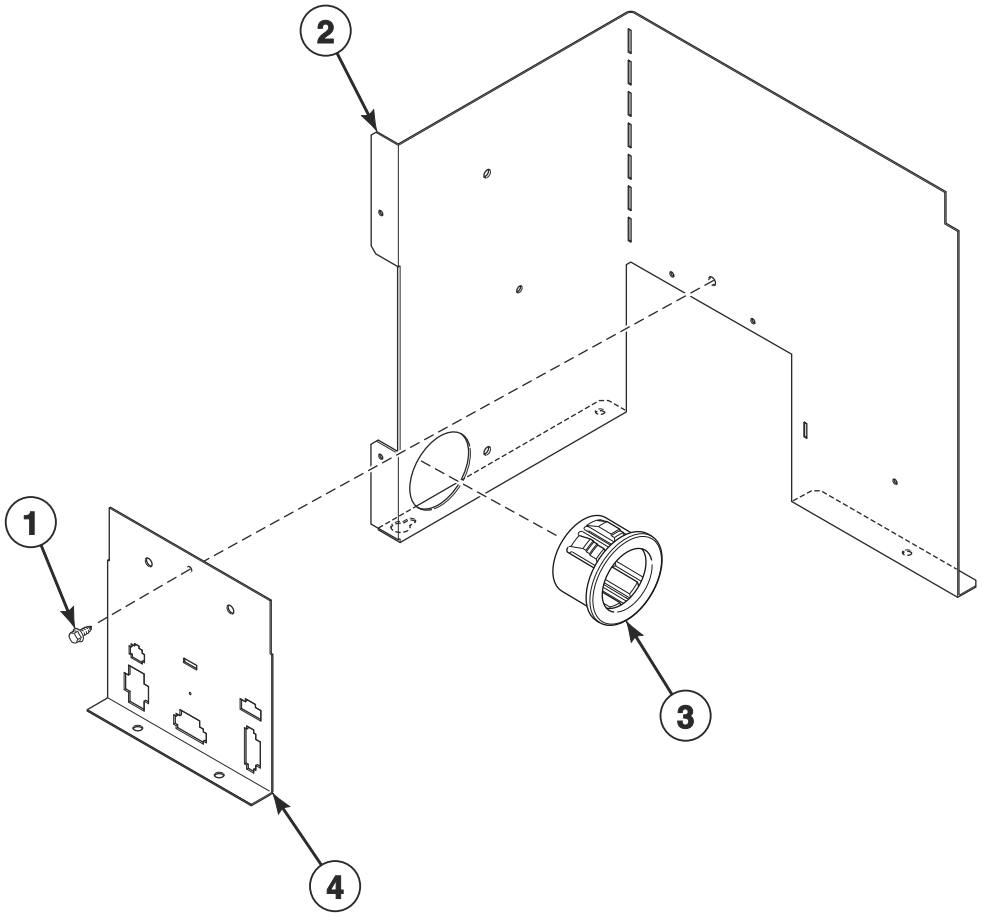

TMB3710P

© Copyright, Alliance Laundry Systems LLC – DO NOT COPY or TRANSMIT

Control Box

REF	PART NO.	DESCRIPTION	COMMENTS
	44363301	Main Harness	
1	430497	Screw	
2	44344101	Control Box Wrap	B, H, P, S and U models with V in 7th position
	44119101	Control Box Wrap	S models with F, N and W in 7th position
	44180101	Control Box Assembly	All other models except S models with D, F, N and W in 7th position
3	D503235	Snap Bushing	Use with 44344101 Control Box Wrap
4	70307005	Control Housing Cover	

© Copyright, Alliance Laundry Systems LLC – DO NOT COPY or TRANSMIT

Fire Suppression System Control Box

Gas and Steam Models

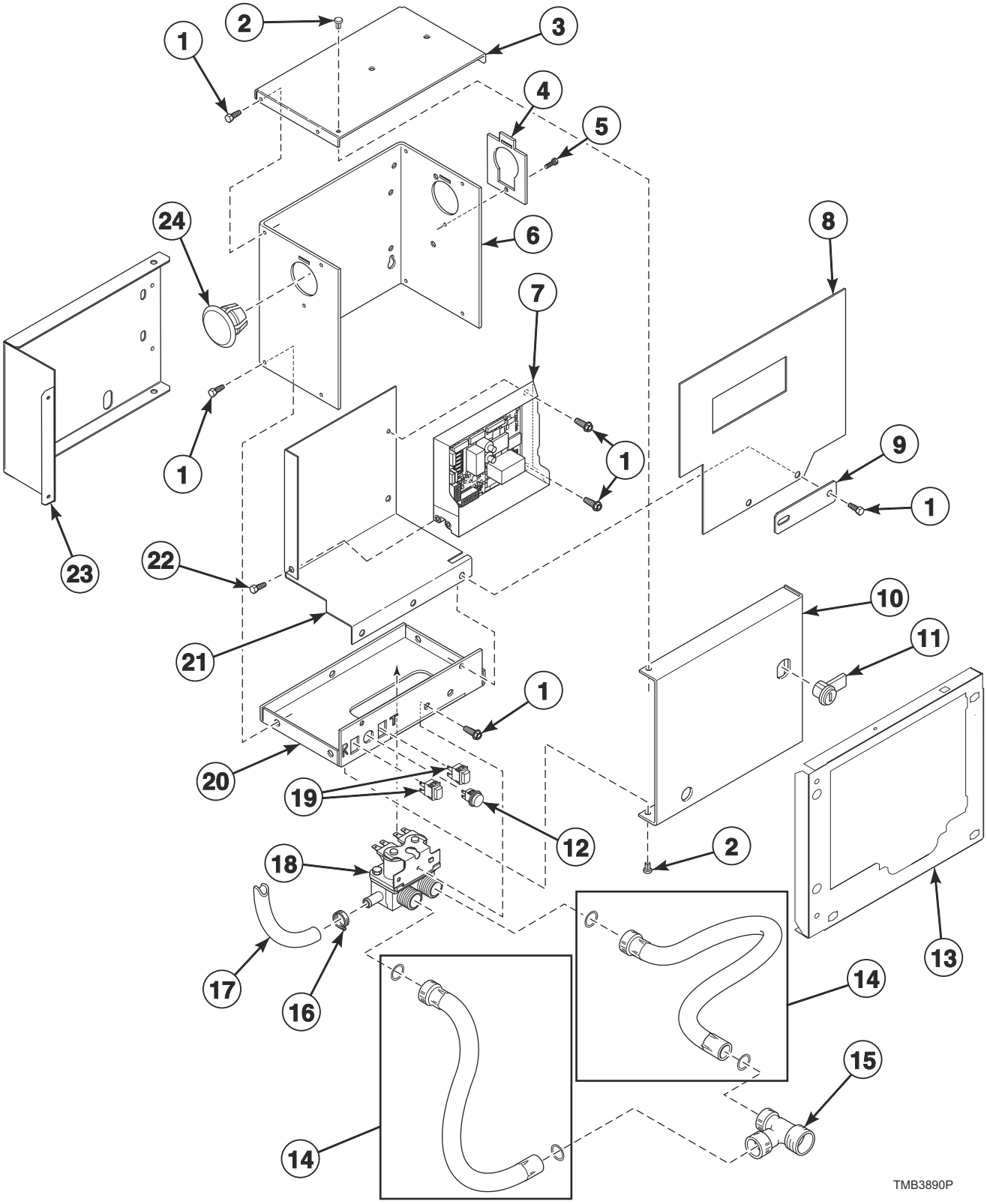

© Copyright, Alliance Laundry Systems LLC – DO NOT COPY or TRANSMIT

Fire Suppression System Control Box

REF	PART NO.	DESCRIPTION	COMMENTS
	44340301	Cold Weather Kit	
	70155601	Key	RL001; Use with item 11
	44375604	Control Harness	
	44375605	Water Valve Harness	
	44375602	Power Sensor Harness	
	44375606	Sensor Harness	
	44375601	Interconnect Harness	
	44375603	Power Sensor Harness	
	44324501	Warning Label	F.S.S.; T and G market models
	44324500	Label Kit	F.S.S.; IEC models
	F8614401	Shock Warning Label	T and G market models
	F8614201	Shock Warning Label	IEC models
	44318200	Label Kit	IEC models
	44324502	Warning Label	
	44318201	Label	T and G market models
1	430497	Screw	
2	M400713	Drive Rivet	
3	44307101	Control Box Top	
4	70523301	Harness Adapter Plate	
5	51780	Screw	
6	44306701	Control Box Housing	
7	70511601	Control	
8	44326801	Shield	
9	70551701	Filter Mounting Plate	
10	44065201	Control Box Cover	
11	70733701	Lock, Key and Nut Kit	RL001 key code; Optional if same key is to be used for control lock
12	801432	Light	
13	44376701	Rear Guard	
14	202799	Fill Hose	2 required; GHT
	202800	Fill Hose	2 required; BSPP
15	44069101	Hose Fitting	T and G market models
16	36801	Hose Clamp	
17	44073304	Hose	14 inches; Outlet hose
18	70519801	Mixing Valve	
19	801434W	Push-to-Start Switch	2 required
20	44065301	Control Box Base	
21	44306601	Mixing Valve Shield Bracket	
22	804608	Screw	
23	44376601	Mounting Bracket	
24	70180001	Plug	

© Copyright, Alliance Laundry Systems LLC – DO NOT COPY or TRANSMIT

Dual Digital Control

All Models Except J Models; Models with F in the 7th Position

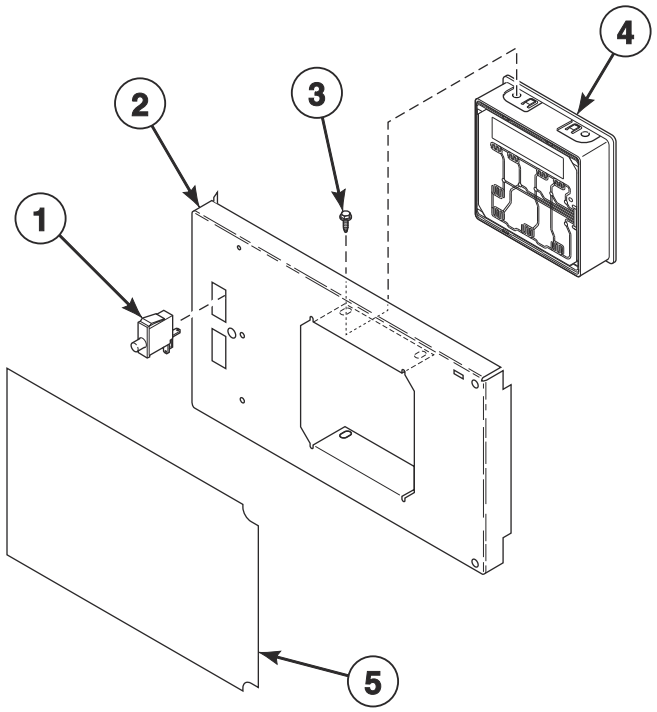

TMB3505P

© Copyright, Alliance Laundry Systems LLC – DO NOT COPY or TRANSMIT

Dual Digital Control

REF	PART NO.	DESCRIPTION	COMMENTS
	44334004	Vend Activation Harness	
1	70413301	Pushbutton Switch	
2	70497101	Control Plate	All models except S models
3	804608	Screw	4 required
4	70523101	Control Assembly	P models; Blue
	70479801	Control Assembly	H, S and U models; Green
	70479901	Control Assembly	B models; Red
5	70539102	Overlay	B models; Nonreversing
	70539101	Overlay	B models; Reversing
	70691302	Overlay	H models; Nonreversing
	70691301	Overlay	H models; Reversing
	70545502	Overlay	P models; Nonreversing
	70545501	Overlay	P models; Reversing
	70675002	Overlay	S models; Nonreversing
	70675001	Overlay	S models; Reversing
	70519002	Overlay	U models; Nonreversing
	70519001	Overlay	U models; Reversing

© Copyright, Alliance Laundry Systems LLC – DO NOT COPY or TRANSMIT

Electronic Display Control - Vend Models with N or W in the 7th Position

All Models Except U Models

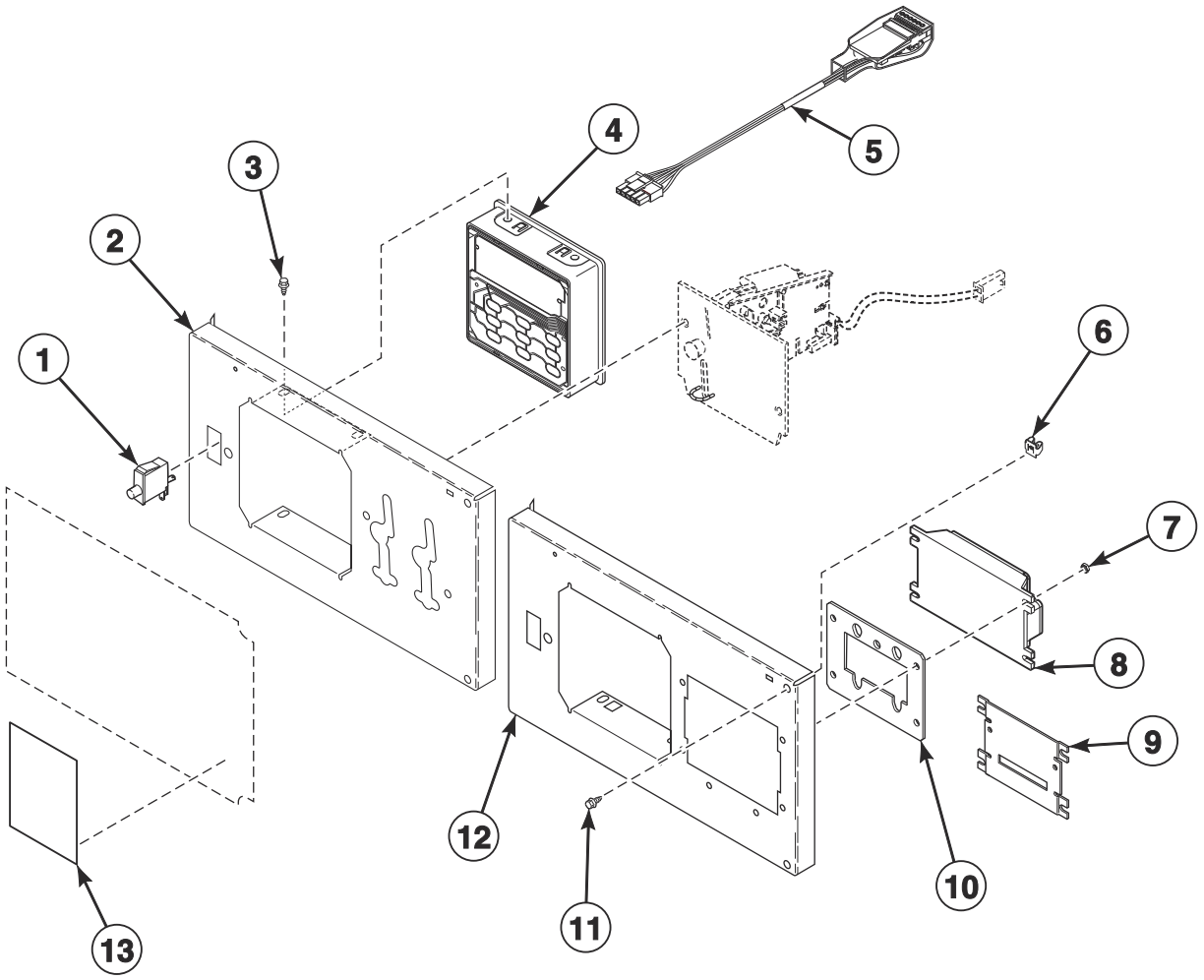

TMB3832P

© Copyright, Alliance Laundry Systems LLC – DO NOT COPY or TRANSMIT

Electronic Display Control - Vend Models with N or W in the 7th Position

REF	PART NO.	DESCRIPTION	COMMENTS
	F8519403	Emergency Stop Bypass Harness	T and G market models
	70707901	Main Harness	
	44334004	Vend Activation Harness	
	F8719301	Fob Communication Harness	
	44378104	Interface Harness	Central pay to front end control
	44334103	Bypass Harness	Vault Switch
	44334104	Coin Vault Switch Harness	
1	70413301	Pushbutton Switch	
2	70496601	Control Plate and Studs Assembly	Coin and central pay; All models except S models
3	804608	Screw	4 required
4	70523003P	Control Assembly	P models; Blue
	70478803P	Control Assembly	H and S models; Green
	70478903P	Control Assembly	B and J models; Red
5	203361P	Machine ID Control Assembly	Model or serial number is required when ordering
6	70030501	Expansion Clip	
7	70054	Nut	
8	205135	Fob Reader Control Assembly	
9	44089501	Slot Card Plate Assembly	
10	70208801	Mounting Plate	
11	M411072	Screw	
12	70497201	Control Plate Assembly	Card and FOB; All models except S models
13	F8205101	Overlay	S models; Single drop; Left
	70557001	Overlay	B and S models; Prep for card
	70557002	Overlay	B and S models; Central pay
	70295101	Overlay	S models; World drop
	70556801	Overlay	H models; World drop
	70556501	Overlay	H models; Prep for card
	70556502	Overlay	H models; Central pay
	70556601	Overlay	H models; Single drop; Left
	70556901	Overlay	H models; Citron; World drop
	70518101	Overlay	H models; Citron; Prep for card
	70518102	Overlay	H models; Citron; Central pay
	70556701	Overlay	H models; Citron; Left
	70556201	Overlay	P models; Single drop; Right
	70556401	Overlay	P models; Prep for card
	70556402	Overlay	P models; Central pay
	70556301	Overlay	P models; Single drop; Left
	F8733901	Overlay	S models; FOB
	F8734201	Overlay	H models; FOB
	F8736501	Overlay	H models; Citron: FOB

© Copyright, Alliance Laundry Systems LLC – DO NOT COPY or TRANSMIT

Electronic Display Control Overlays- Vend Models with N or W in the 7th Position

All Models Except U Models

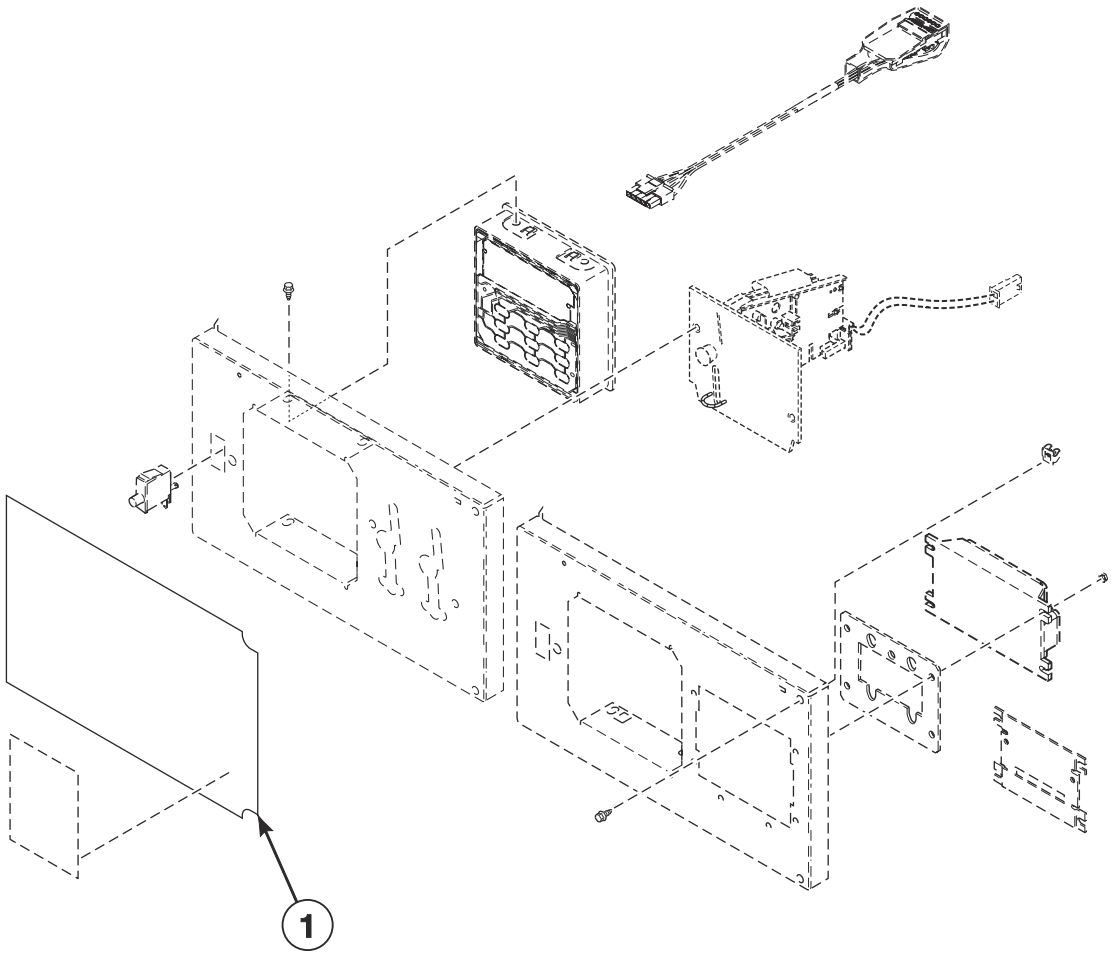

TMB3832PA

© Copyright, Alliance Laundry Systems LLC – DO NOT COPY or TRANSMIT

Electronic Display Control Overlays- Vend Models with N or W in the 7th Position

REF	PART NO.	DESCRIPTION	COMMENTS
1	70681701	Overlay	S models; Single drop
	70681702	Overlay	S models; Dual drop
	70681703	Overlay	S models; Card ready
	70681704	Overlay	S models; Central pay
	70681705	Overlay	S models; World drop
	70705701	Overlay	S models with D in 17th position
	70722401	Overlay	Model ST075N; Single drop; Lint sensor
	70722402	Overlay	Model ST075N; Dual drop; Lint sensor
	70722403	Overlay	Model ST075N; Card ready; Lint sensor
	70722404	Overlay	Model ST075N; Central pay; Lint sensor
	70722405	Overlay	Model ST075N; World drop; Lint sensor
	70690401	Overlay	H models; Single drop
	70690402	Overlay	H models; Dual drop
	70690403	Overlay	H models; Card ready
	70690404	Overlay	H models; Central pay
	70690405	Overlay	H models; World drop
	70714101	Overlay	Model HT075N; Single drop; Lint sensor
	70714102	Overlay	Model HT075N; Dual drop; Lint sensor
	70714103	Overlay	Model HT075N; Card ready; Lint sensor
	70714104	Overlay	Model HT075N; Central pay; Lint sensor
	70714105	Overlay	Model HT075N; World drop; Lint sensor
	70690701	Overlay	H models; Single drop; Citron
	70690702	Overlay	H models; Dual drop; Citron
	70690703	Overlay	H models; Card ready; Citron
	70714401	Overlay	Model HT075N; Single drop; Citron; Lint sensor
	70714402	Overlay	Model HT075N; Dual drop; Citron; Lint sensor
	70714403	Overlay	Model HT075N; Card ready; Citron; Lint sensor
	70571101	Overlay	B models; Single drop
	70571102	Overlay	B models; Dual drop
	70571103	Overlay	B models; Card ready
	70541201	Overlay	P models; Single drop
	70541202	Overlay	P models; Dual drop
	70541203	Overlay	P models; Card ready
	70571104	Overlay	J models; Electric drop

© Copyright, Alliance Laundry Systems LLC – DO NOT COPY or TRANSMIT

Electronic Display Control - OPL Models with N in the 7th Position

All Models Except J Models

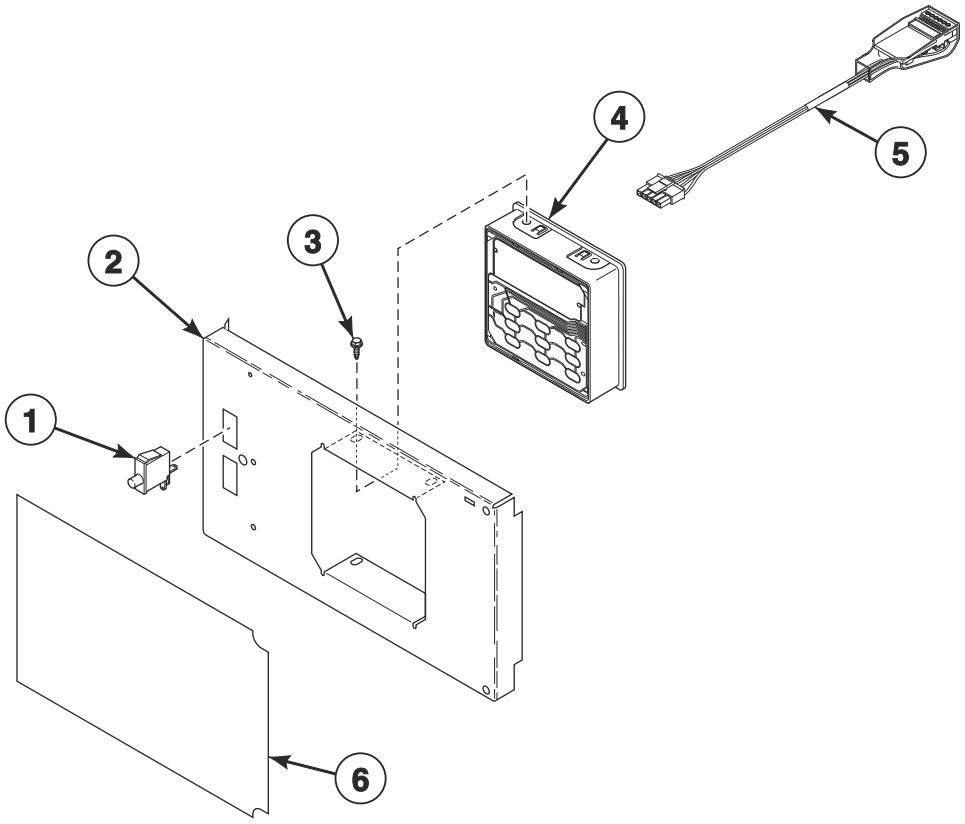

TMB3680P

© Copyright, Alliance Laundry Systems LLC – DO NOT COPY or TRANSMIT

Electronic Display Control - OPL Models with N in the 7th Position

REF	PART NO.	DESCRIPTION	COMMENTS
	44334004	Vend Activation Harness	
1	70413301	Pushbutton Switch	
2	70497101	Control Plate	All models except S models
3	804608	Screw	4 required
4	70523004P	Control Assembly	P models
	70478804P	Control Assembly	H, S and U models
	70478904P	Control Assembly	B models
5	203361P	Machine ID Control Assembly	Model or serial number is required when ordering
6	70673301	Overlay	S models; Reversing
	70673302	Overlay	S models; Nonreversing
	70714801	Overlay	Model ST075N; Reversing; Lint sensor
	70714802	Overlay	Model ST075N; Nonreversing; Lint sensor
	70571401	Overlay	U models; Reversing
	70571402	Overlay	U models; Nonreversing
	70715501	Overlay	Model UT075N; Reversing; Lint sensor
	70715502	Overlay	Model UT075N; Nonreversing; Lint sensor
	70691001	Overlay	H models; Reversing
	70691002	Overlay	H models; Nonreversing
	70715101	Overlay	Model HT075N; Reversing; Lint sensor
	70715102	Overlay	Model HT075N; Nonreversing; Lint sensor
	70548801	Overlay	B models; Reversing
	70548802	Overlay	B models; Nonreversing
	70571601	Overlay	P models; Reversing
	70571602	Overlay	P models; Nonreversing

© Copyright, Alliance Laundry Systems LLC – DO NOT COPY or TRANSMIT

3.5 Inch Graphical Control

U Models with D in the 7th Position

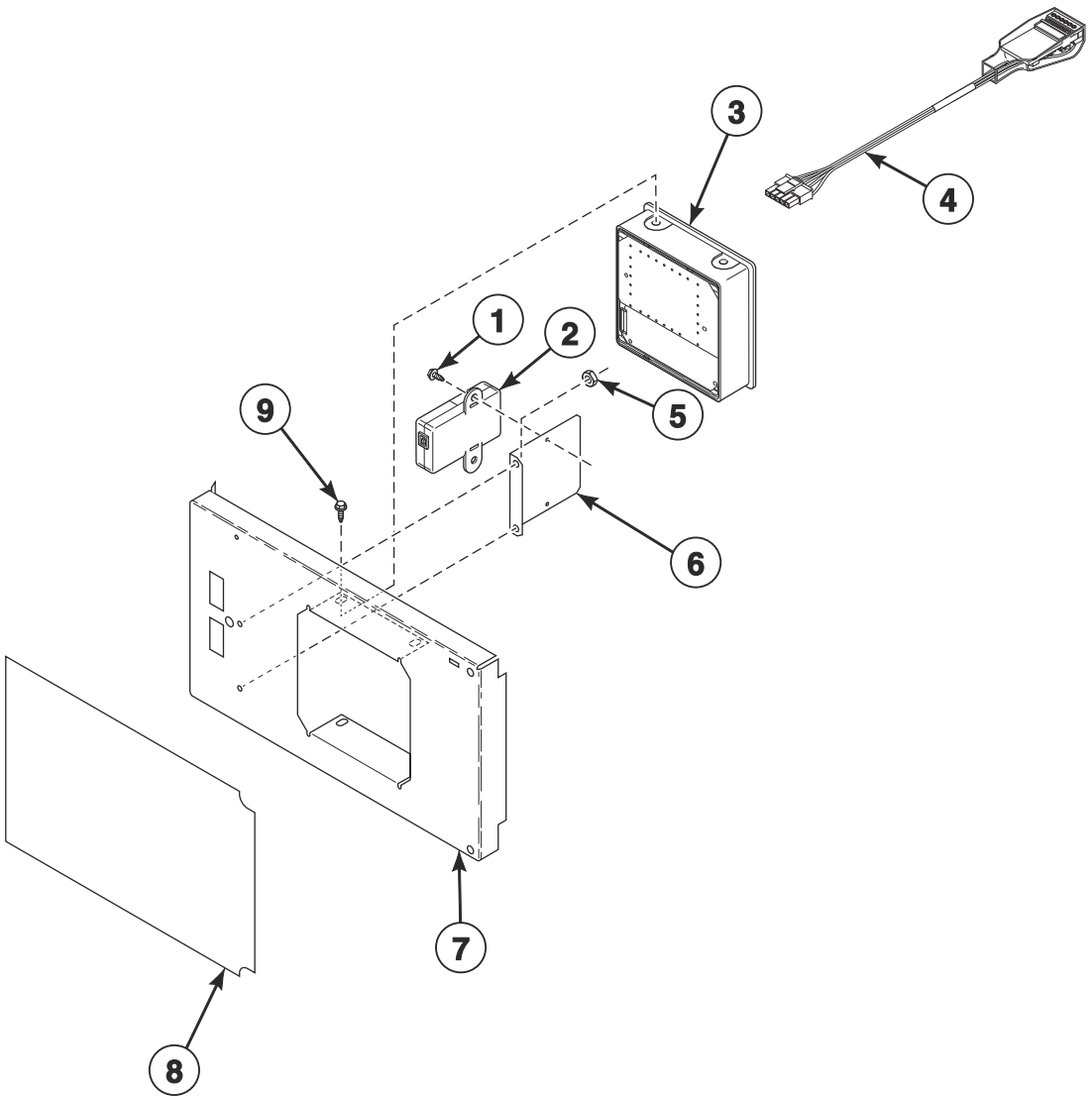

TMB3681P

© Copyright, Alliance Laundry Systems LLC – DO NOT COPY or TRANSMIT

3.5 Inch Graphical Control

REF	PART NO.	DESCRIPTION	COMMENTS
	F8617901	Harness	USB
1	51780	Screw	2 required
2	203440	USB-Serial Interface Assembly	
3	70543104	Control Assembly	
4	203361P	Machine ID Control Assembly	Model or serial number is required when ordering
5	44071201	Nut	2 required
6	70547001	USB Bracket	
7	70570201	Control Door and Studs Assembly	
8	70595401	Overlay	
9	804608	Screw	4 required

© Copyright, Alliance Laundry Systems LLC – DO NOT COPY or TRANSMIT

Touch Control - Vend Models with V in the 7th Position

B, H, P and S models

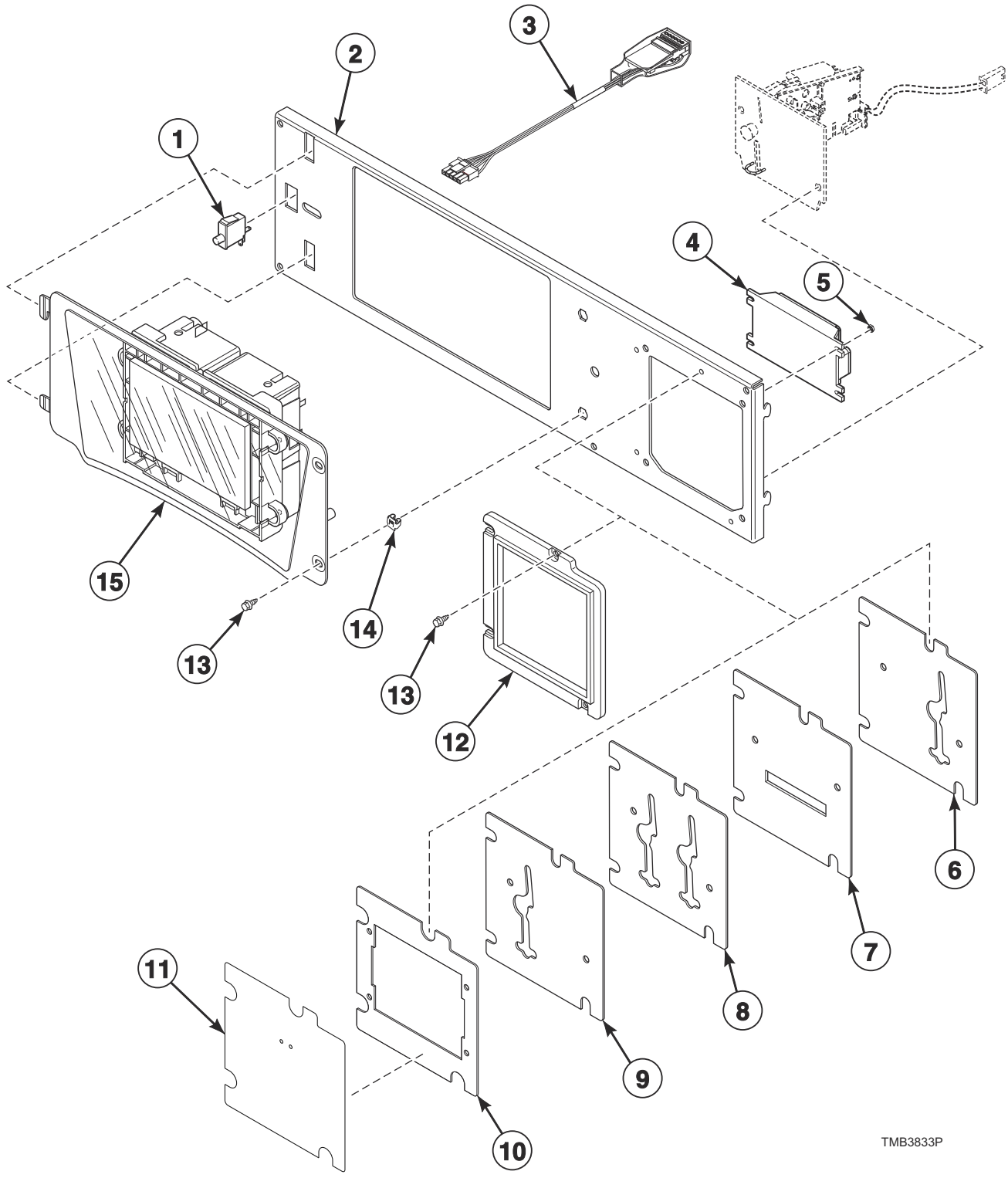

© Copyright, Alliance Laundry Systems LLC – DO NOT COPY or TRANSMIT

Touch Control - Vend Models with V in the 7th Position

REF	PART NO.	DESCRIPTION	COMMENTS
	44334002	Vend Activation Harness	
	44087101	Nut	2 required
	204692	Wireless Control Label	2 required
	203440	USB-Serial Interface Assembly	
	44374701	App Pay Overlay Kit	
	F8647701P	Control Screen Replacement Kit	
	F8519403	Emergency Stop Bypass Harness	T and G market models
	70707901	Main Harness	
	F8719302	Fob Communication Harness	
	44378104	Interface Harness	Central pay to front end control
	F8713906	Serial Pay Harness	Card
	44334103	Bypass Harness	Vault switch
	44334104	Coin Vault Switch Harness	
1	70413301	Pushbutton Switch	
2	70598601	Control Mounting Bracket	
3	203361P	Machine ID Control Assembly	
4	205135	Fob Reader Control Assembly	
5	70054	Nut	
6	F8574205	Accessory Plate Assembly	World drop
7	F8574204	Card Reader Plate	Card
8	F8574203	Accessory Plate Assembly	Dual drop
9	F8574202	Accessory Plate Assembly	Single drop
10	F8734601	Accessory Plate Assembly	FOB
11	F8734001	Overlay	S models; FOB
	F8734301	Overlay	H models; FOB
	F8736601	Overlay	H models; Citron; FOB
12	F8632501	Vend Plate	
13	39733	Screw	
14	70030501	Expansion Clip	2 required
15	70697001P	Control Assembly	

© Copyright, Alliance Laundry Systems LLC – DO NOT COPY or TRANSMIT

Touch Control - OPL Models with V in the 7th Position

B, J, P and U models

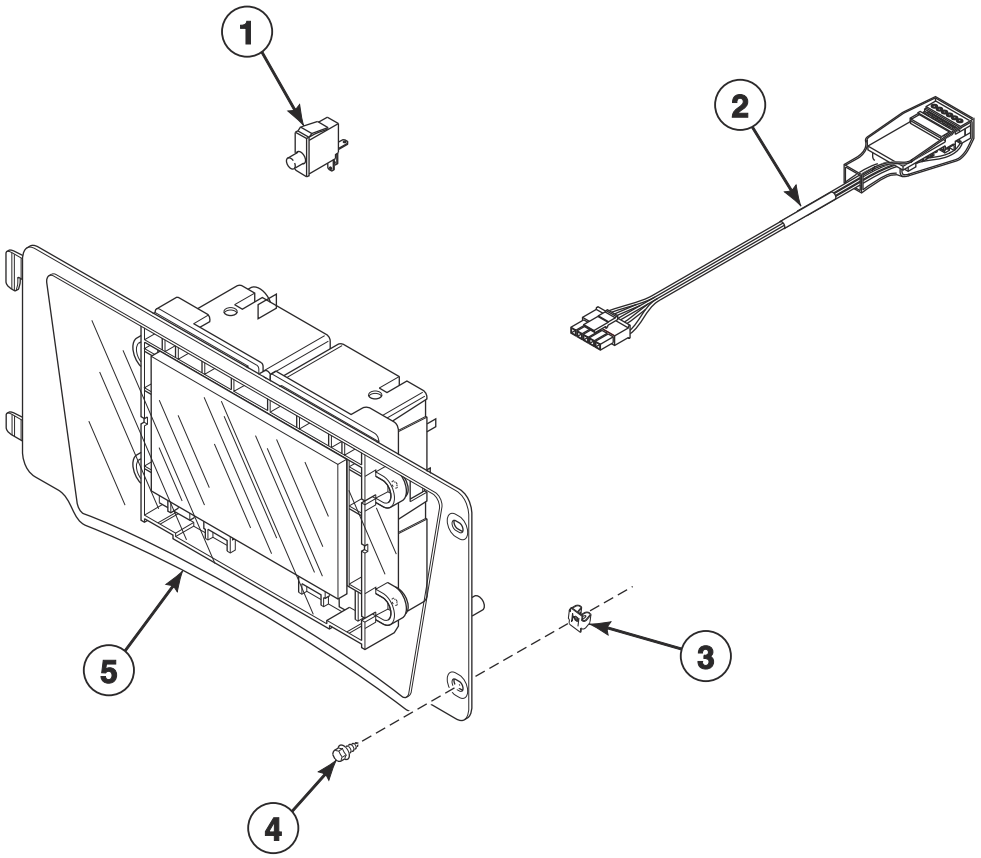

TMB3828P

© Copyright, Alliance Laundry Systems LLC – DO NOT COPY or TRANSMIT

Touch Control - OPL Models with V in the 7th Position

REF	PART NO.	DESCRIPTION	COMMENTS
	44087101	Nut	2 required
	204692	Wireless Control Label	2 required
	203440	USB-Serial Interface Assembly	
	44374701	App Pay Overlay Kit	
	F8647701P	Control Screen Replacement Kit	Use with 70697003 Control Assembly; B, J and P models
	572506P	Control Screen Replacement Kit	Use with 70697004 Control Assembly; U models
	70707901	Main Harness	
	F8617901	Harness	U models; USB
	51780	Screw	U models; Use with 70547001 USB Bracket
	70547001	USB Bracket	U models
1	70413301	Pushbutton Switch	
2	203361P	Machine ID Control Assembly	
3	70030501	Expansion Clip	2 required
4	39733	Screw	
5	70697003	Control Assembly	B, J and P models
	70697004	Control Assembly	U models

© Copyright, Alliance Laundry Systems LLC – DO NOT COPY or TRANSMIT

Coin Drops

All Models Except U Models

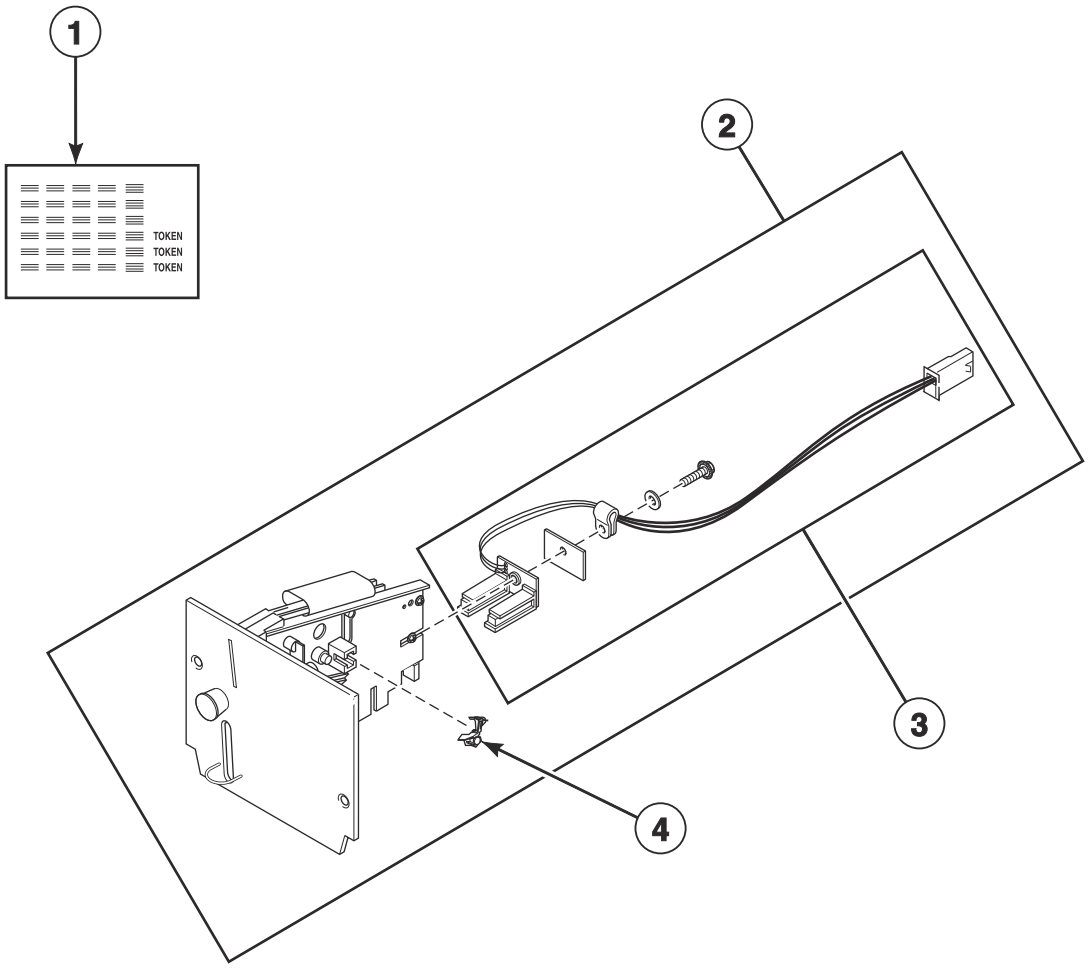

TMB3510P

© Copyright, Alliance Laundry Systems LLC – DO NOT COPY or TRANSMIT

Coin Drops

REF	PART NO.	DESCRIPTION	COMMENTS
1	38725	Coin Identification Paper	
2	70441601P	Coin Drop	Single; U.S.A.; $.25
	38475	Coin Drop Assembly	Single; Japan; 100 yen
	38464P	Coin Drop Assembly	Single; Canada; .25
	CK077	Coin Drop Kit	Single; Taiwan; 10 NT
	70506901	Coin Drop Assembly	Single; Singapore; $1.00 NEW
	70441603	Coin Drop	Dual; U.S.A.; $.25 and $1.00
	38519	Coin Drop Assembly	Dual; Japan; 100 yen and 500 yen
	70441602	Coin Drop Assembly	Dual; Canada; .25 and 1.00
	38467	Coin Drop Assembly	Dual; Australia; $0.20 and $1.00
	CK111	Coin Drop Kit	Dual; Australia; $1.00 and $2.00
	70283102	Coin Drop Assembly	Dual; 0.20 and 0.50 Euro
	210195	Coin Drop Assembly	Dual; 0.20 and 1.00 Euro
	210196	Coin Drop Assembly	Dual; 0.50 and 1.00 Euro
	F0160737-00	Coin Meter	Dual; 0.50 and 2.00 Euro
	70281102	Coin Drop Assembly	Dual; Taiwan; 10 and 50 NT
	70482401	Coin Drop Assembly	Dual; New Zealand; $1.00 and $2.00
	38462P	Coin Drop Assembly	Single; Token; STD 118-1
	38463	Coin Drop Assembly	Single; Token; STD 118-5
	38963P	Coin Drop	Single; Token STD 118-16
	CK097	Coin Drop Kit	Single; Jeton 08MS
	201141	Coin Drop Assembly	Single; Token; Jeton wh121
	70471601	Coin Drop Assembly	Single; Token; 7K
	70513310	Electronic Coin Drop Assembly	Japan and Thailand coins
	70513304	Electronic Coin Drop Assembly	Australia, New Zealand, Hong Kong and South Korea coins
	70513303	Electronic Coin Drop Assembly	Denmark, Norway and Euro coins
	70513306	Electronic Coin Drop Assembly	Mexico, Ecuador and U.S.A. coins
	70294107	Electronic Coin Drop Assembly	Lithuania, Latvia and Euro coins
	70513311	Electronic Coin Drop Assembly	China and Malaysia coins
	70513318	Electronic Coin Drop Assembly	South African 1, 2 and 5 rand coins
	70513309	Electronic Coin Drop Assembly	Euro coins
	70513312	Electronic Coin Drop Assembly	Russia coins
	70513313	Electronic Coin Drop Assembly	Philippines coins
	70513314	Electronic Coin Drop Assembly	Thailand coins
	70513315	Electronic Coin Drop Assembly	Chile coins
	70513316	Electronic Coin Drop Assembly	Singapore coins
3	200674P	Opto Coupler	
4	201595P	Wire Guard	

© Copyright, Alliance Laundry Systems LLC – DO NOT COPY or TRANSMIT

Coin Drop Kits

All Models Except U Models

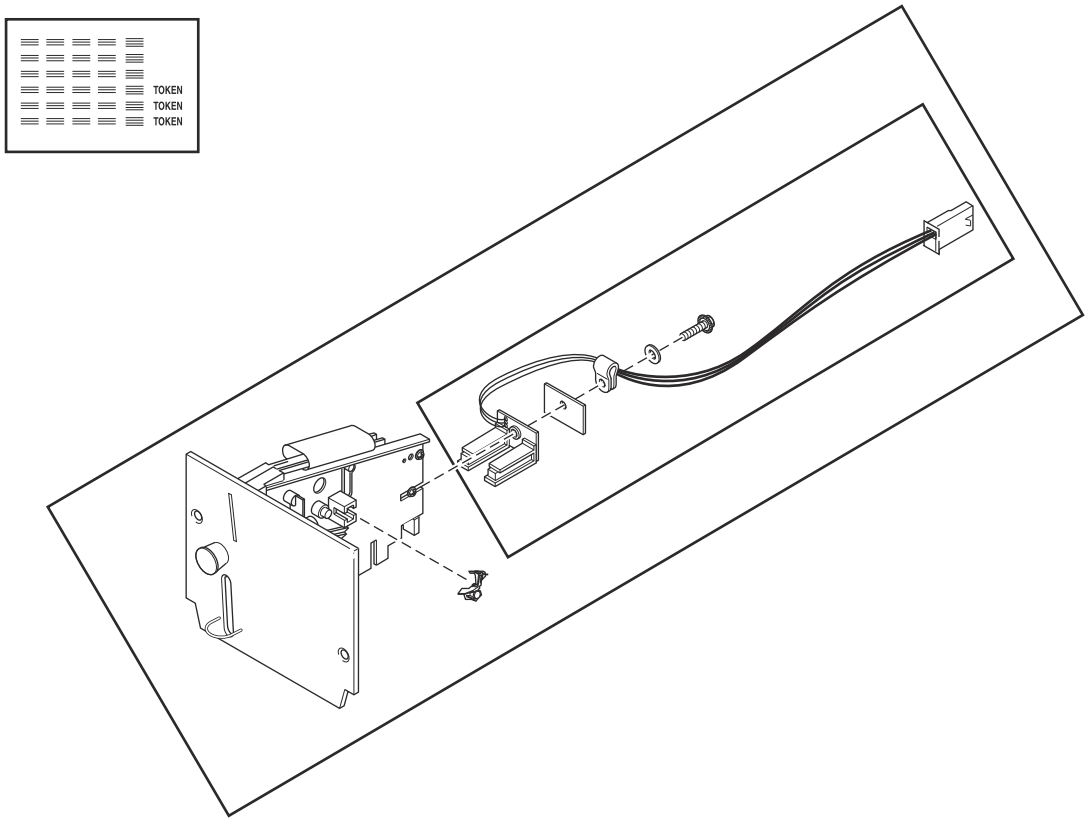

TMB3510PA

© Copyright, Alliance Laundry Systems LLC – DO NOT COPY or TRANSMIT

Coin Drop Kits

REF	PART NO.	DESCRIPTION	COMMENTS
	CK115	Electronic Coin Drop Kit	United States and Canada
	CK099	Electronic Coin Drop Kit	Australia (default), New Zealand, Hong Kong, South Korea and Malaysia
	CK100	Electronic Coin Drop Kit	United Kingdom (default) and Europe
	CK101	Electronic Coin Drop Kit	Europe (default), Denmark and Norway
	CK125	Electronic Coin Drop Kit	South Africa
	CK109	Electronic Coin Drop Kit	Euro
	CK110	Electronic Coin Drop Kit	Mexico (default), Ecuador and United States
	CK113	Electronic Coin Drop Kit	Japan and Taiwan
	CK116	Electronic Coin Drop Kit	Malaysia (default) and China
	CK117	Electronic Coin Drop Kit	Russia
	CK118	Electronic Coin Drop Kit	Philippine
	CK119	Electronic Coin Drop Kit	Thailand
	CK120	Electronic Coin Drop Kit	Chile
	CK121	Electronic Coin Drop Kit	Singapore
	CK122	Coin Drop Kit	New Zealand; 1.00 and 2.00

© Copyright, Alliance Laundry Systems LLC – DO NOT COPY or TRANSMIT

Network Board Components

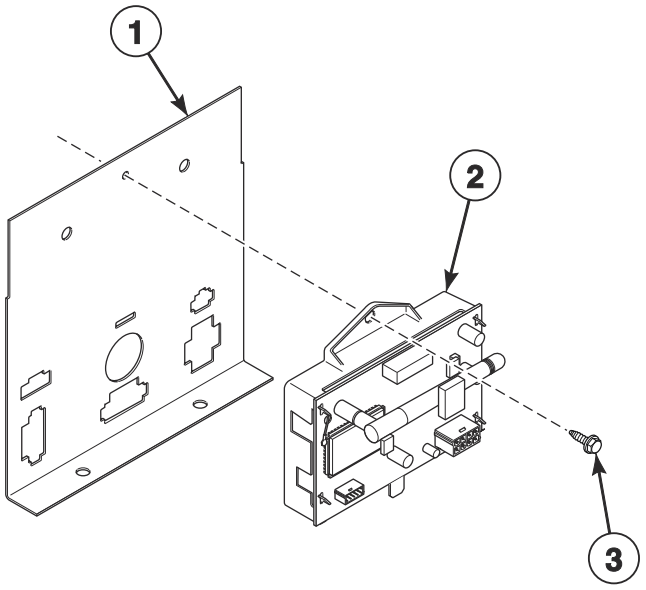

TMB3834P

© Copyright, Alliance Laundry Systems LLC – DO NOT COPY or TRANSMIT

Network Board Components

REF	PART NO.	DESCRIPTION	COMMENTS
	70609701	Wireless Network Kit	
	F8674006	Wireless Network Harness	
	204692	Wireless Control Label	
	203346	USB IR Interface Kit	
1	70307005	Control Housing Cover	
2	807211	Wireless Network Control Assembly	
3	F8206901	Screw	

© Copyright, Alliance Laundry Systems LLC – DO NOT COPY or TRANSMIT

Emergency Stop Button - IEC OPL Models

A, H, J, K, R and U in the 2nd Position

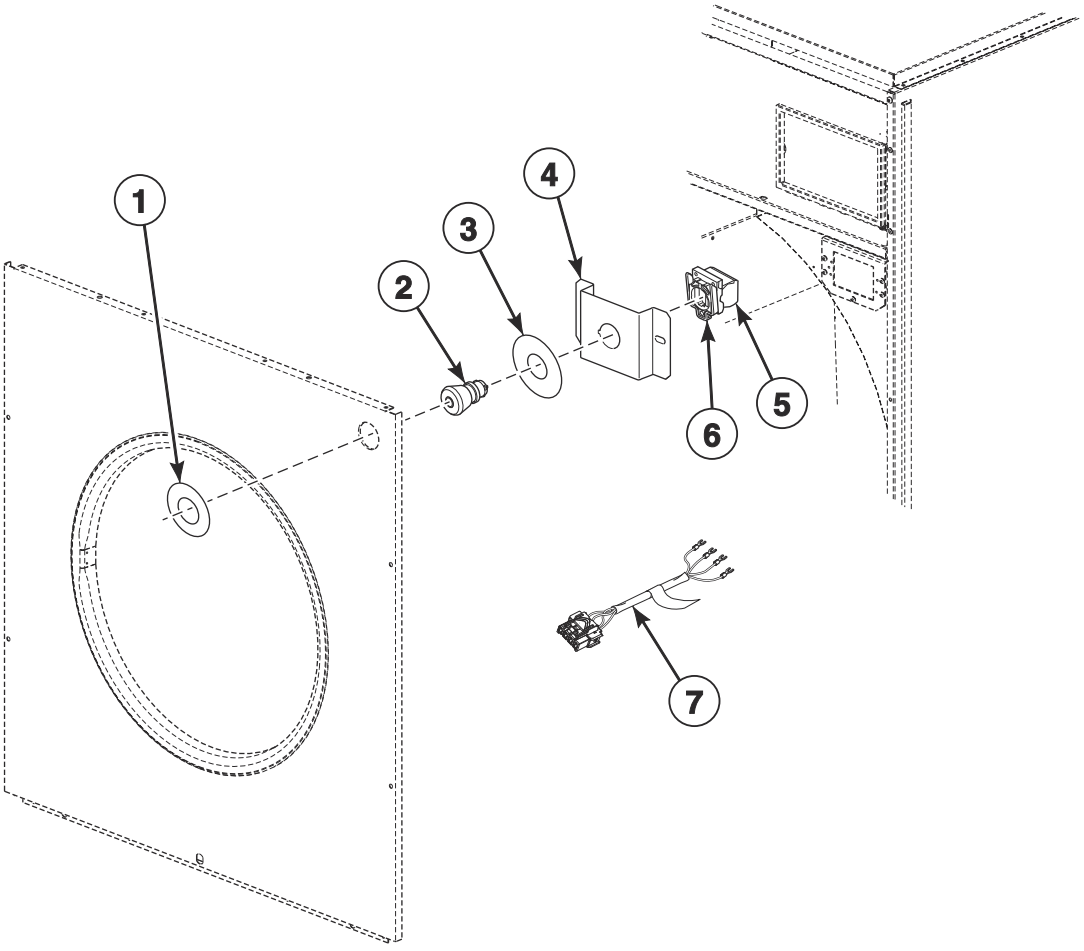

TMB3513P

© Copyright, Alliance Laundry Systems LLC – DO NOT COPY or TRANSMIT

Emergency Stop Button - IEC OPL Models

REF	PART NO.	DESCRIPTION	COMMENTS
	70580301	Emergency Stop Button Kit	Includes items 2-4
	70631102	Emergency Stop Interconnect Harness	
1	44012903	Emergency Stop Label	
2	F200233500	Emergency Stop Pushbutton	
3	44012901	Emergency Stop Label	
4	70550401	Emergency Stop Mounting Bracket	
5	F8069501	Contact Switch	2 required
6	F8538101	Contact Base	
7	44272401	Emergency Stop Harness	

© Copyright, Alliance Laundry Systems LLC – DO NOT COPY or TRANSMIT

Cabinet Front Components

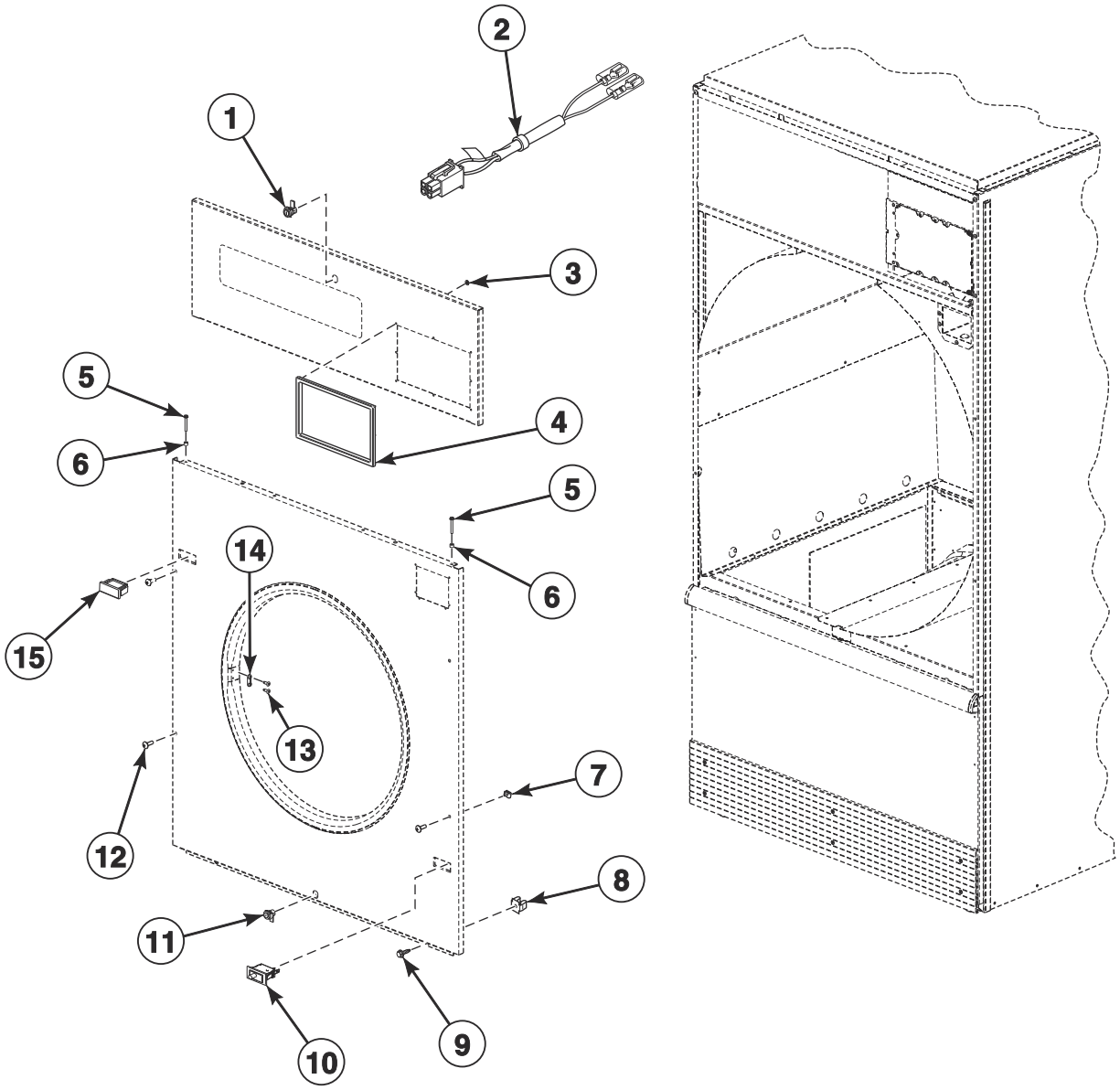

© Copyright, Alliance Laundry Systems LLC – DO NOT COPY or TRANSMIT

Cabinet Front Components

REF	PART NO.	DESCRIPTION	COMMENTS
	M4379P4	Tumbler Dolly Kit	
	D511476	Jumper Harness	Card reader present
	44366201	Door Switch Harness	
	44334103	Bypass Harness	Card and central pay
	70482901	Door Catch Kit	
1	70733701	Lock, Key and Nut Kit	RL001 key code; Black; Control panel; Optional if same key is to be used for control lock
	70155601	Key	RL001
2	44334101	Coin Vault Switch Harness	
3	M400977	Nut	8 required per control trim
4	70529401	Control Trim	H models; Gray
	44016401	Control Trim	P models; Black
5	70275801	Screw	4 required
6	56079	Panel Locator	2 required
7	70030401	Nut	
8	70030501	Expansion Clip	
9	M411072	Screw	4 required; Front panel; Bottom
10	70413301	Pushbutton Switch	Door switch
11	70733701	Lock, Key and Nut Kit	RL001 key code; Black; Lint panel; Optional if same key is to be used for control lock
	70155601	Key	RL001
	70722301	Lock, Key and Nut Kit	RL002 key code; Black; Lint panel; Standard coin and card models
	70155602	Key	RL002
12	70033502	Screw	2 required for stainless steel panels in addition to 2 of 70182601 Screw
	70182601	Screw	2 required for stainless steel panels in addition to 2 of 70033502 Screw; 4 required for painted panels
13	44166601	Pop Rivet	2 per door latch
14	M401223	Door Latch	2 required
15	44057801W	Switch Hole Plug	White
	44057801B	Switch Hole Plug	Black
	44057801LG	Switch Hole Plug	Light gray

© Copyright, Alliance Laundry Systems LLC – DO NOT COPY or TRANSMIT

Control Panels and Nameplates

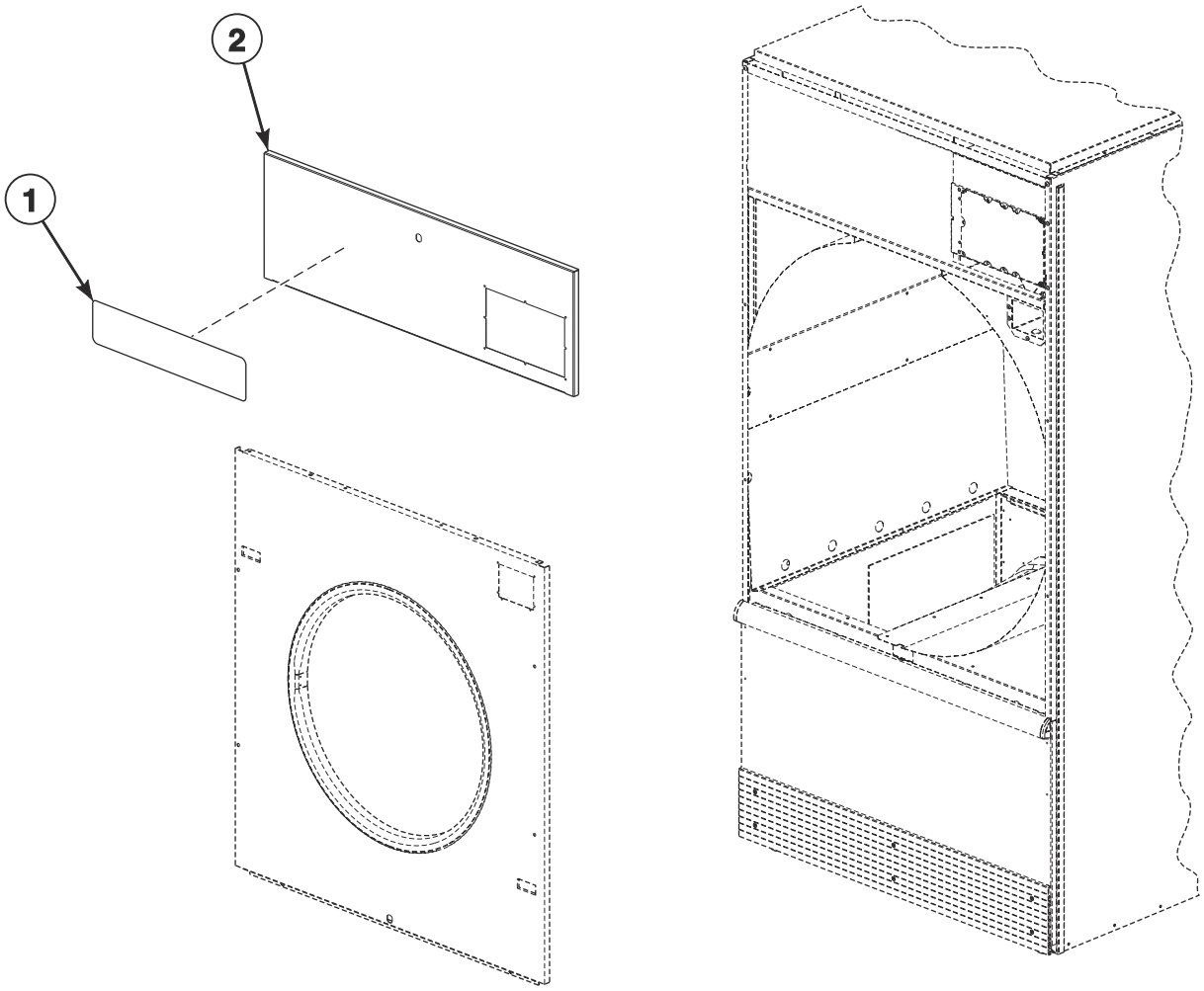

TMB3891P

© Copyright, Alliance Laundry Systems LLC – DO NOT COPY or TRANSMIT

Control Panels and Nameplates

REF	PART NO.	DESCRIPTION	COMMENTS
1	F8688901	Nameplate	S models
	F8688001	Nameplate	H models
	F8443106	Nameplate	U models
	567293	Nameplate	B models
	567887	Nameplate	P models
	70686501	Nameplate	J models
	70686601	Nameplate	J models; SAFE
	562738	Label	B, P, and S models; Softwash
2	44040015W	Control Panel	B, J and U models; Models with D, F, N and W in 7th position
	44040013	Control Panel	B and U models; Stainless steel; Models with D, F, N and W in 7th position
	44000130W	Control Panel	H and P models; Models with F, N and W in 7th position
	44000125	Control Panel	H and P models; Stainless steel; Models with F, N and W in 7th position
	44040015LG	Control Panel	U models; Light gray; Models with D, F, N and W in 7th position
	44000130DG	Control Panel	P models; Dark gray; Models with F, N and W in 7th position
	44344001	Control Panel	B, H, P and S models; Stainless steel; Coin and card; Models with V in 7th position
	44344002	Control Panel	B, H, J, P and S models; Stainless steel; Central pay and OPL; Models with V in 7th position
	70693201W	Control Panel	U models; Models with V in 7th position
	70693201LG	Control Panel	U models; Light gray; Models with V in 7th position
	70693202	Control Panel	U models; Stainless steel; Models with V in 7th position
	44388701	Control Panel	S models; Stainless steel; Coin and central pay; Models with N and W in 7th position
	44388702	Control Panel	S models; Stainless steel; Card; Models with N and W in 7th position
	44388603	Control Panel	S models; Stainless steel; OPL; Models with F, N and W in 7th position
	44388703W	Control Panel	S models; Coin and central pay; Models with N and W in 7th position
	44388704W	Control Panel	S models; Card; Models with N and W in 7th position
	44388606W	Control Panel	S models; OPL; Models with F, N and W in 7th position

© Copyright, Alliance Laundry Systems LLC – DO NOT COPY or TRANSMIT

Front Panel Assemblies

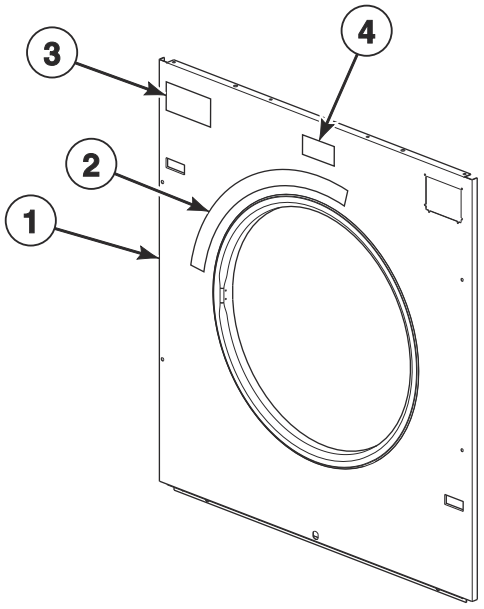

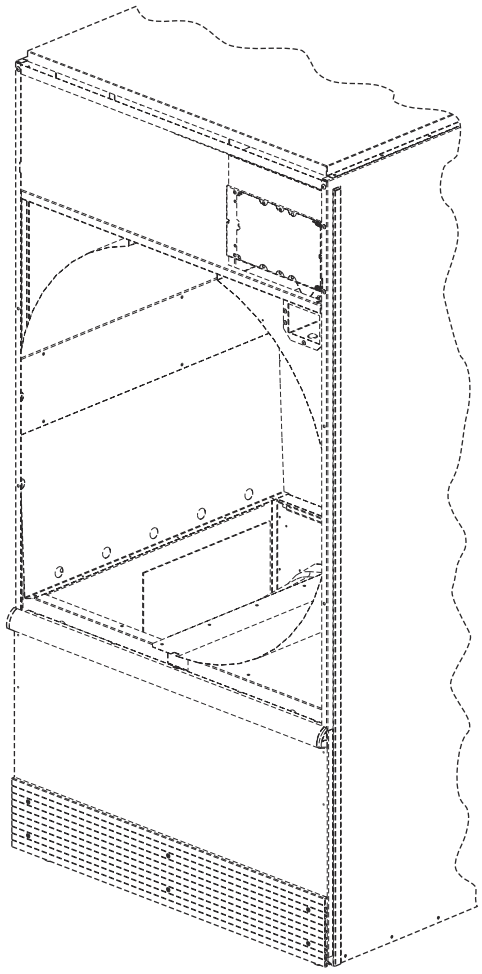

TMB3910P

© Copyright, Alliance Laundry Systems LLC – DO NOT COPY or TRANSMIT

Front Panel Assemblies

REF	PART NO.	DESCRIPTION	COMMENTS
1	44052533W	Front Panel	All models except H models; Coin; Models with N and W in 7th position
	44052532	Front Panel	All models except J and U models; Stainless steel; Coin; Models with N and W in 7th position
	44346305	Front Panel	B, H, P and S models; Stainless steel; Coin; Models with V in 7th position
	44052533DG	Front Panel	P models; Dark gray; Coin; Models with N and W in 7th position
	44052536W	Front Panel	All models except H and J models; Card, central pay and FOB; Models with N and W in 7th position
	44052535	Front Panel	All models except J and U models; Stainless steel; Card, central pay and FOB; Models with N and W in 7th position
	44346306	Front Panel	B, H, P and S models; Stainless steel; Card, central pay and FOB; Models with V in 7th position
	44052536DG	Front Panel	P models; Dark gray; Card, central pay and FOB; Models with N and W in 7th position
	44052542W	Front Panel	All models except J models; With e-stop; OPL; Models with D, F, N and W in 7th position
	44052541	Front Panel	All models except J and U models; Stainless steel; With e-stop; OPL; Models with D, F, N and W in 7th position
	44346308	Front Panel	Stainless steel; With e-stop; OPL; Models with V in 7th position
	44052541	Front Panel	U models; Stainless steel; With e-stop; OPL; Models with D, F, N and W in 7th position
	44052542LG	Front Panel	U models; Light gray; With e-stop; OPL
	44052542DG	Front Panel	P models; Dark gray; With e-stop; OPL; Models with F, N and W in 7th position
	44052539W	Front Panel	All models except J models; Without e-stop; OPL; Models with D, F, N and W in 7th position
	44052538	Front Panel	All models except J and U models; Stainless steel; Without e-stop; OPL; Models with D, F, N and W in 7th position
	44346307	Front Panel	B, H, P, S and U models; Stainless steel; Without e-stop; OPL; Models with V in 7th position
	44052538	Front Panel	U models; Stainless steel; Without e-stop; OPL; Models with D, F, N and W in 7th position
	44052539LG	Front Panel	U models; Light gray; Without e-stop; OPL
	44052539DG	Front Panel	P models; Dark gray; Without e-stop; OPL; Models with F, N and W in 7th position
2	70534401	Warning Label	English
	70534402	Warning Label	French
	70534405	Warning Label	Colombian Spanish
	70534400	Label Kit	Warning; IEC models
3	44190901	Label	P models; Safe Tech
	70537001	Label	B, H, S and U models; C.A.R.E.
4	70472801	Label	U models

© Copyright, Alliance Laundry Systems LLC – DO NOT COPY or TRANSMIT

Lower Cabinet Front Components

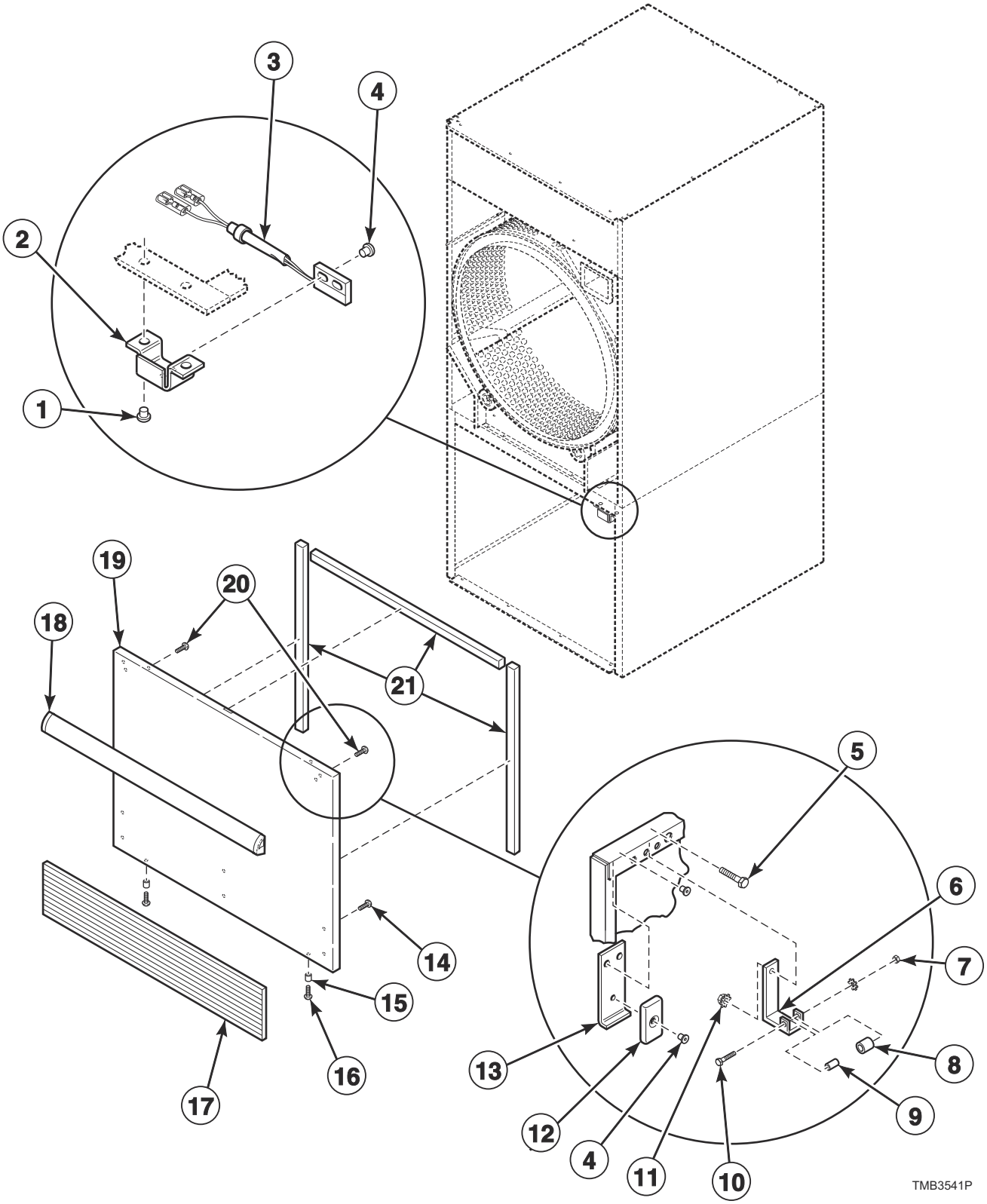

© Copyright, Alliance Laundry Systems LLC – DO NOT COPY or TRANSMIT

Lower Cabinet Front Components

REF	PART NO.	DESCRIPTION	COMMENTS
	44362702	Lint Door Switch Harness	
	70404001	Roller Bracket Assembly	Includes items 6-10
1	70058501	Pop Rivet	
2	44296101	Switch Bracket	
3	F8066804	Reed Switch Assembly	
4	70743501	Rivet	
5	70132301	Screw	Attaching roller catch
6	70030301	Roller Catch Arm	
7	23951	Nut	
8	70297601	Roller Catch Wheel	
9	70030201	Roller Catch Spacer	
10	70072801	Screw	
11	51236	Nut	Attaching roller catch
12	70343101	Magnet	
13	44290501	Magnet Bracket	
14	70126301	Pop Rivet	For attaching kickplate; Black; 6 required
	70126401	Pop Rivet	For attaching kickplate; Gray; 6 required
15	56079	Panel Locator	
16	39733	Screw	
17	70117619	Kickplate	H and U models; Gray
	70117607	Kickplate	All models except H models; Black
18	70154405P	Handle and Caps Assembly	B, J and S models; Black; Includes endcaps
	70407210	Handle Bumper	P models; Silver
	70154415	Handle and Caps Assembly	H and U models; Gray; Includes endcaps
19	44293603W	Lint Panel	All models except J models; With kickplate (order separately)
	44293604DG	Lint Panel	P models; Dark gray; No kickplate
	44293603LG	Lint Panel	U models; Light gray; With kickplate (order separately)
	44293602	Lint Panel	All models except P models; Stainless steel; With kickplate (order separately)
	44293605	Lint Panel	All models except J models; Stainless steel; No kickplate
	44293604W	Lint Panel	No kickplate
20	430757	Screw	
21	70289101P	Gasket	Sold per foot

© Copyright, Alliance Laundry Systems LLC – DO NOT COPY or TRANSMIT

Lint Panel Components

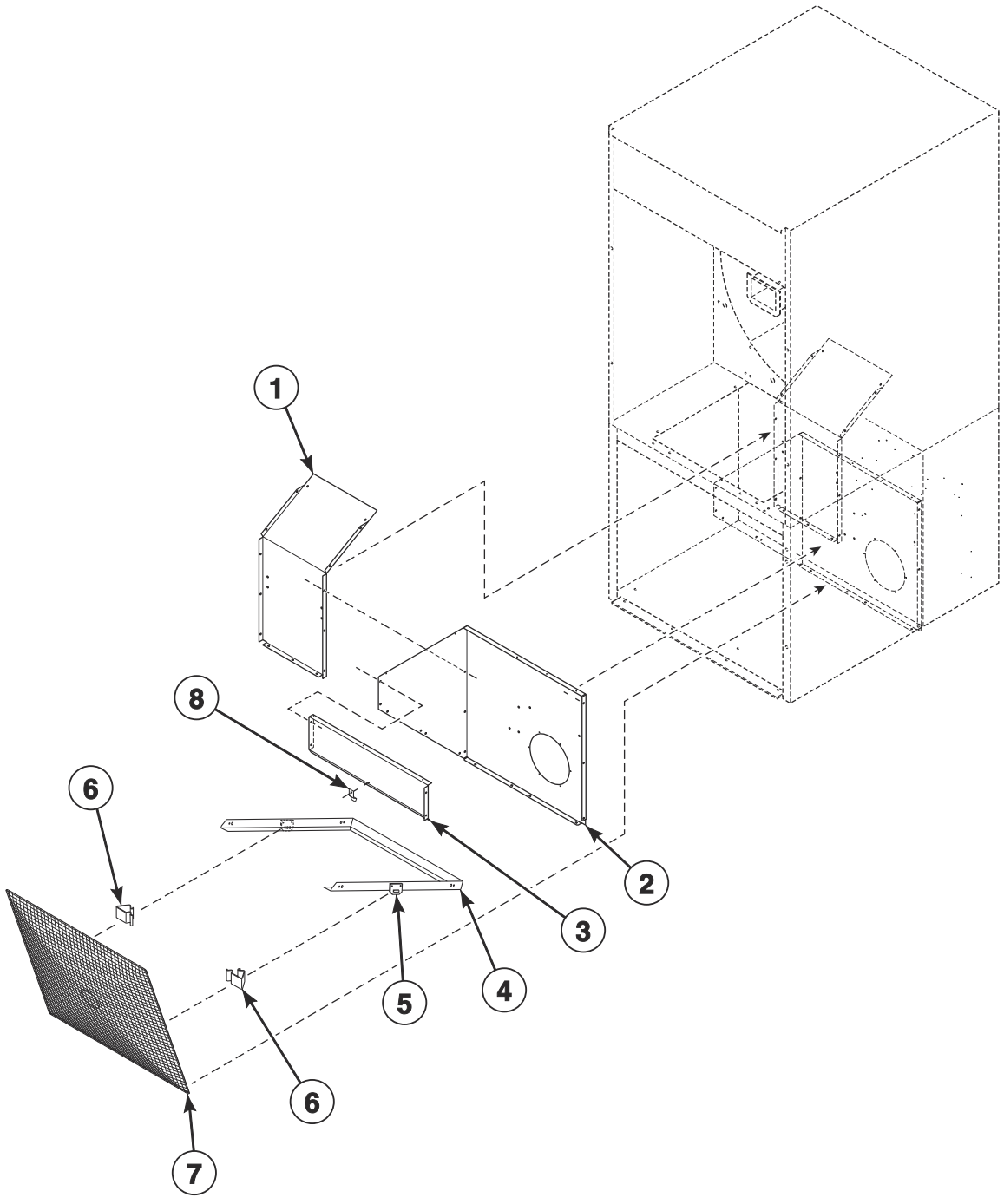

TMB3637P

© Copyright, Alliance Laundry Systems LLC – DO NOT COPY or TRANSMIT

Lint Panel Components

REF	PART NO.	DESCRIPTION	COMMENTS
1	44298101	Lint Panel	F75 models; Left
	44298102	Lint Panel	All other models; Left
2	44298201	Lint Panel	F75 models; Right
	44300901	Lint Panel	All other models; Right
3	44298901	Lint Screen Top Rail	
4	44325301	Lint Bracket	
5	44140202	Lint Clip Bracket	2 required
6	35865	Hold-Down Clip	2 required
7	44063601	Lint Screen	
8	H96418413	Lint Screen Clip	

© Copyright, Alliance Laundry Systems LLC – DO NOT COPY or TRANSMIT

Cabinet Components (Drawing 1 of 2)

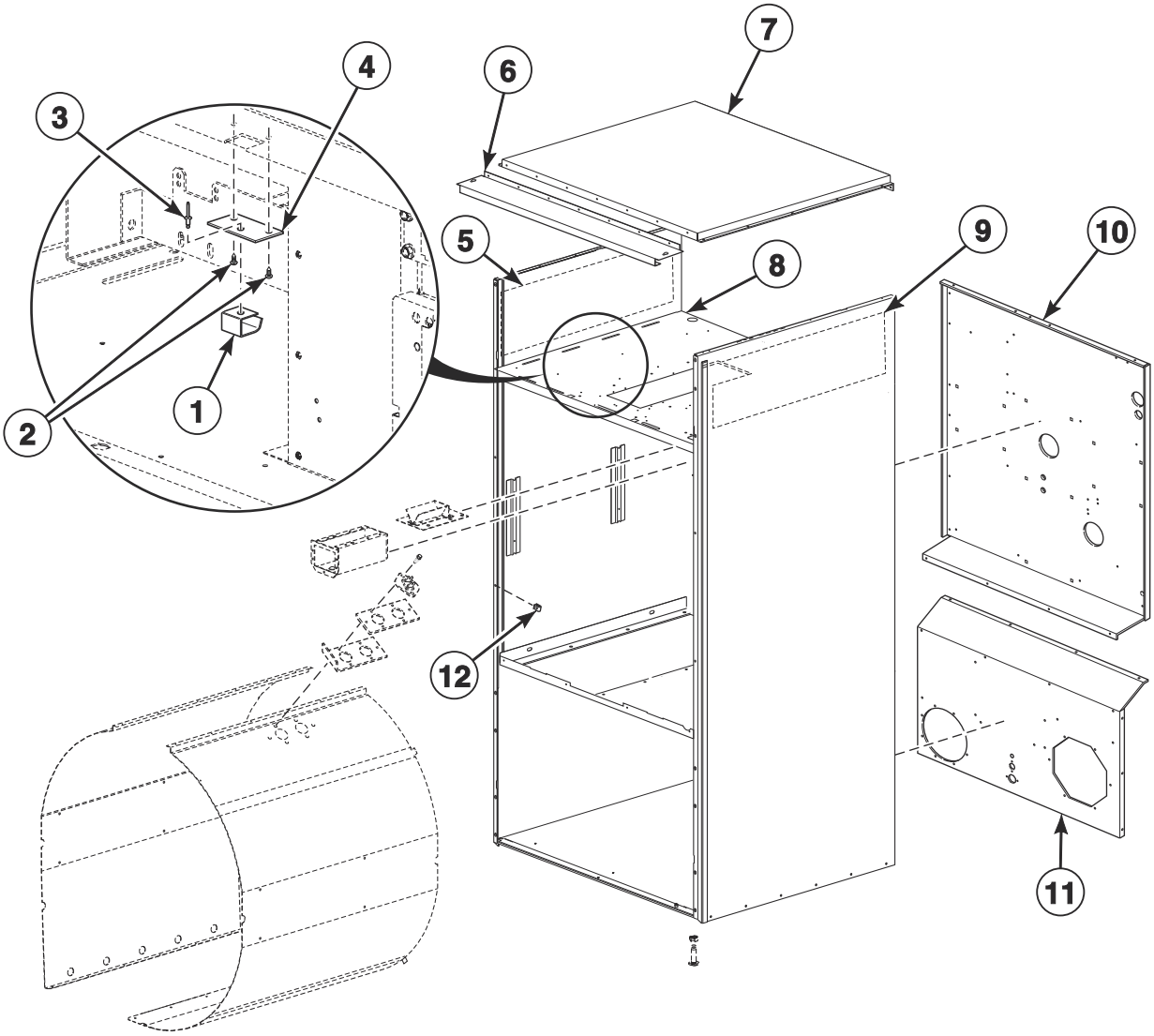

TMB3992P

© Copyright, Alliance Laundry Systems LLC – DO NOT COPY or TRANSMIT

Cabinet Components (Drawing 1 of 2)

REF	PART NO.	DESCRIPTION	COMMENTS
	298P4P	Spray Paint	White
	122P4P	Porcelain Touch-Up Paint	White
1	431318	Control Door Latch	
2	431287	Screw	
3	M400003	Pop Rivet	
4	44003201	Latch Mounting Bracket	
5	44150102	Insulation	
6	44368201	Top Panel Bracket	Gas and electric models with D, F, N and W in the 7th position and 0 or A in the 16th position
7	44129301P	Top Cover Pan	Gas and electric models with D, F, N and W in the 7th position and 0 or A in the 16th position
	44399201	Top Panel	ProCapture models with D, N and W in the 7th position and C in the 16th position
	44368901	Top Cover	Steam models with D, F, N and W in the 7th position
	44348801	Top Panel	Gas models with V in the 7th position
	44348802	Top Panel	Electric models with V in the 7th position
8	44300101	Top Pan	Models with D, F, N and W in the 7th position and 0 or A in the 16th position
	44398801	Top Pan	ProCapture models with D, N and W in the 7th position and C in the 16th position
	44348701	Top Pan	Gas models with V in the 7th position
	44352501	Top Pan	Electric models with V in the 7th position
9	44150105	Insulation	
10	44376901	Upper Rear Panel	Models with 0 or A in the 16th position
	44394301	Upper Rear Panel	ProCapture models with C in the 16th position
11	44297101	Lower Rear Panel	F75 models
	44380501	Lower Rear Panel	All other models
12	70030401	Nut	

© Copyright, Alliance Laundry Systems LLC – DO NOT COPY or TRANSMIT

Cabinet Components (Drawing 2 of 2)

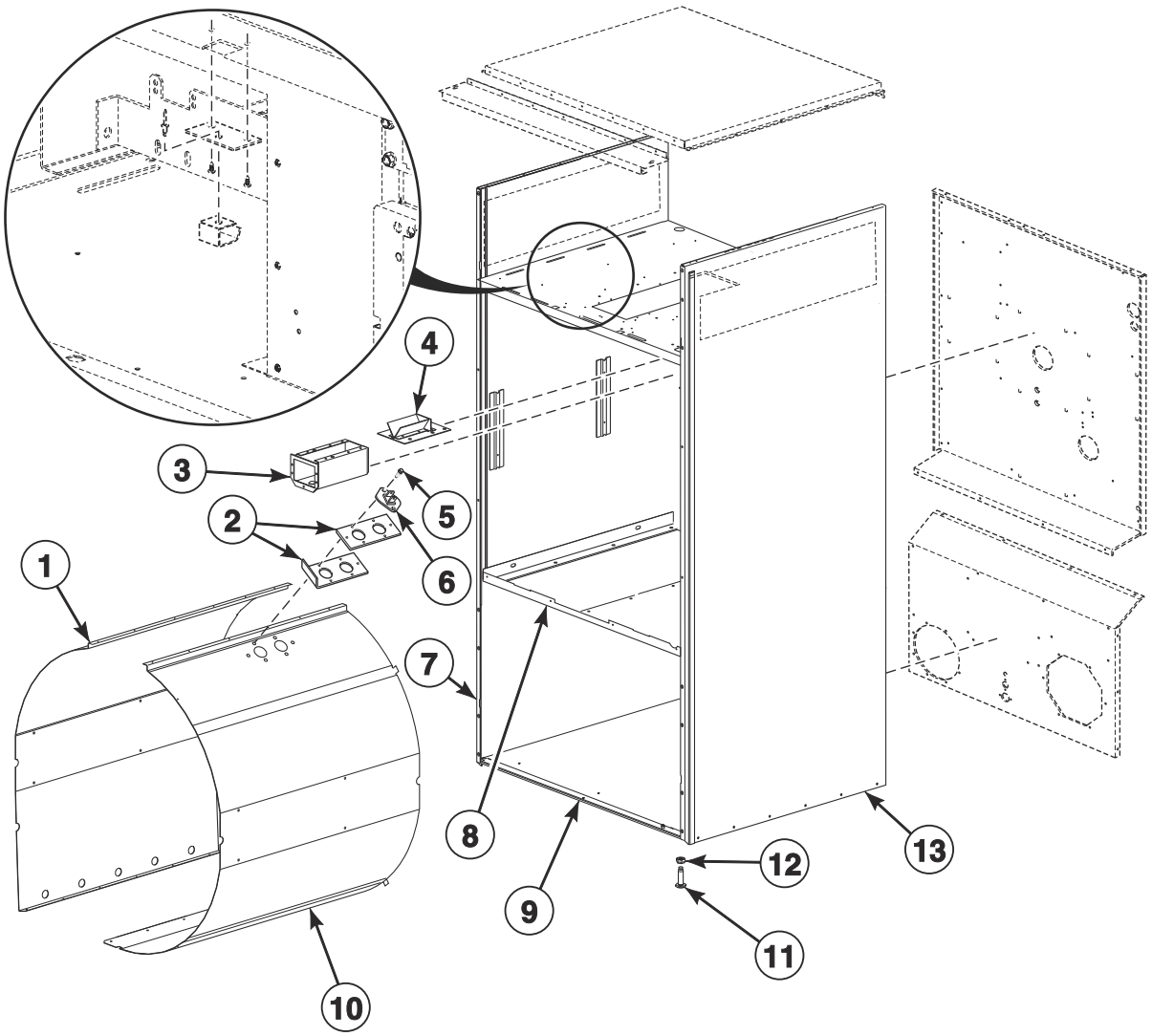

TMB3893PA

© Copyright, Alliance Laundry Systems LLC – DO NOT COPY or TRANSMIT

Cabinet Components (Drawing 2 of 2)

REF	PART NO.	DESCRIPTION	COMMENTS
	298P4P	Spray Paint	White
	122P4P	Porcelain Touch-Up Paint	White
	70058501	Pop Rivet	Use with items 7 and 13
	430497	Screw	Use with items 7 and 13
	205655	Leveling Leg Locknut Wrench	Use with item 12
1	44299001P	Baffle	Left; Models with 0 or A in the 16th position
	44393502	Baffle	Left; ProCapture models with C in the 16th position
2	44068101	Thermistor Plate	
	44068102	Thermistor Plate	Use as a shim
3	70529501	Coin Vault Assembly	
	70529502	Coin Vault and Emergency Stop Mount Assembly	Models with emergency stop
	F160673P	Coin Box	Optional equipment; Includes lock and key
4	70296401	Coin Chute Assembly	Wide
5	51780	Screw	
6	44064701	Thermistor	
7	44367702DG	Side Panel	B, J and P models; Left; Dark gray
	44367702LGP	Side Panel	U models; Left; Light gray
	44367702WP	Side Panel	Left
8	44298601	Center Pan	
9	44298701	Bottom Pan	
10	44299802P	Baffle	Right; Models with 0 or A in the 16th position
	44299801	Baffle	Right with fire suppression system; Models with 0 or A in the 16th position
	44393501	Baffle	Right; ProCapture models with C in the 16th position
11	70247701	Screw	Leveling leg
12	21899	Nut	Right
13	44367802DGP	Side Panel	B, J and P models; Right; Dark gray
	44367802LGP	Side Panel	U models; Right; Light gray
	44367802WP	Side Panel	Right

© Copyright, Alliance Laundry Systems LLC – DO NOT COPY or TRANSMIT

ProCapture Components

Models with C in the 16th Position

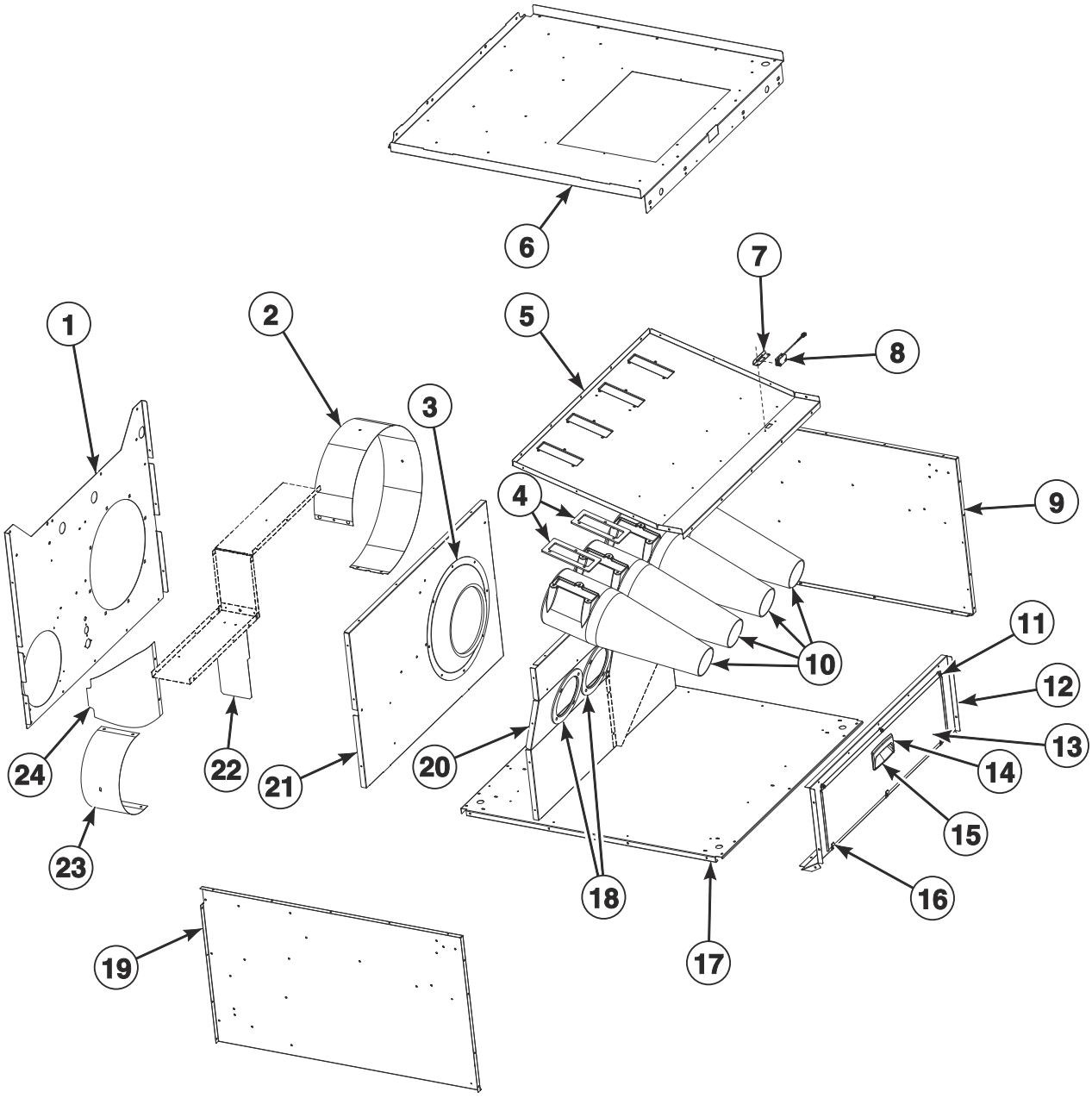

TMB4030P

© Copyright, Alliance Laundry Systems LLC – DO NOT COPY or TRANSMIT

ProCapture Components

REF	PART NO.	DESCRIPTION	COMMENTS
	44399603	Lint Sensor Harness	Use with item 8
	44396201	Edge Protector	Large object cleanout
	44394701	Edge Protector	Lint; Use with item 12 through 1/24/24
1	44393601	Rear Duct Panel	
2	44396301	Blower Housing Scroll	
3	44305201	Blower Inlet Cone	
4	44394501	Gasket	Inlet
5	44393901	Intake Panel	
6	44393301	Center Pan	
7	70723001	Lint Sensor Bracket	Use 70436301 Screw to attach
8	44399602	IR Sensor	Use F8510901 Screw to attach
9	44393701	Inner Support Panel	Right
10	44394401	Cyclone	4 required
11	F430232	Nut	3 required
	F8406201	Magnet	3 required
12	44394001	Cyclone Lint Front Panel	
13	44395801	Lint Cover Panel	
14	D510129W	Door Handle Wedge	
15	D511213P	Door Pull and Wedge Kit	
16	70226701	Clip	3 required
17	44394201	Bottom Pan	
18	44394601	Gasket	Outlet
19	44393702	Inner Support Panel	Left
20	44393801	Rear Mount Panel	
21	44393401	Front Duct Panel	
22	44280302	Damper Assembly	
23	44308402	Air Exhaust Deflector	
24	44395701	Outlet Deflector	

© Copyright, Alliance Laundry Systems LLC – DO NOT COPY or TRANSMIT

Rear Panel and Belt Guard Components

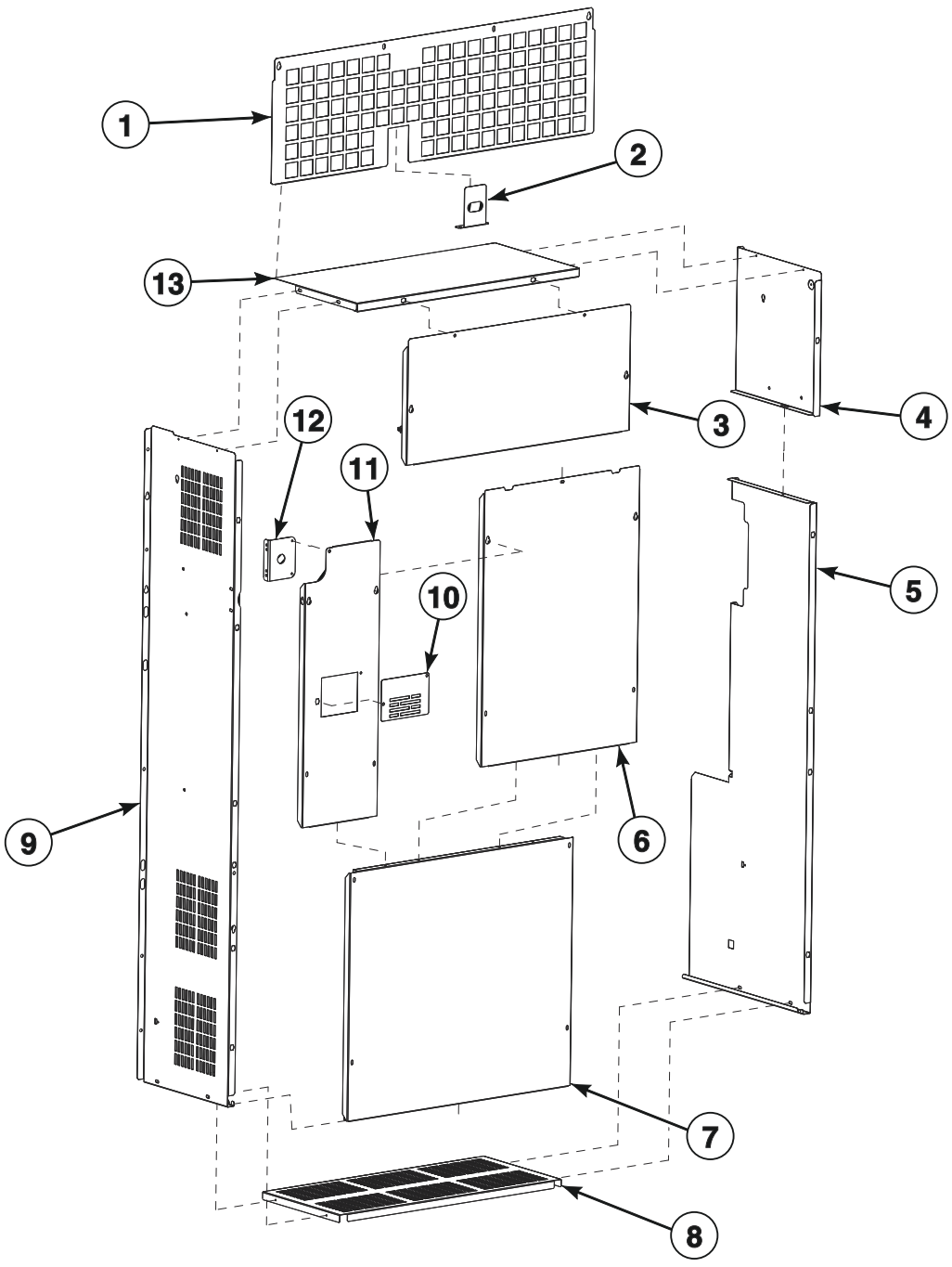

TMB3894P

© Copyright, Alliance Laundry Systems LLC – DO NOT COPY or TRANSMIT

Rear Panel and Belt Guard Components

REF	PART NO.	DESCRIPTION	COMMENTS
	F8206901	Screw	#10-16x5/8; Use with items 3, 6, 7 and 11; Used on item 10 with 70058501 Pop Rivet
	430497	Screw	#10-16x3/8; Use with items 1, 2, 4, 5, 8, 9, 12 and 13
	808338	Warning Label	Contains battery; T market models
1	44300301	Stove Grate	Gas models
	44300302	Stove Grate	Steam models
	44364801	Stove Grate	Electric models
2	44327601	Pipe Bracket	Gas models with D, F, N and W in the 7th position
	44327603	Pipe Bracket	Gas models with V in the 7th position
	44376801	Steam Harness Bracket	Steam models
3	44363801	Control Tray Guard	
4	44374301	Upper Guard	Left
5	44363501	Lower Guard	Left; Models with 0 or A in the 16th position
	44395101	Lower Guard	Left; ProCapture models with C in the 16th position
6	44373501	Rear Guard	Belt
7	44363901	Lower Guard	Rear
	44363902	Lower Guard	Rear with fire suppression system
8	44377301	Guard	Bottom
9	44363601	Guard	Right
10	70202501	Drive Access Cover	
11	44373401	Rear Guard	Inverter
12	70615501	Conduit Plate	Gas and steam models
	70615502	Conduit Plate	Electric models
13	44364001	Top Guard	Gas and steam models
	44364002	Top Guard	Electric models

© Copyright, Alliance Laundry Systems LLC – DO NOT COPY or TRANSMIT

Door Assemblies

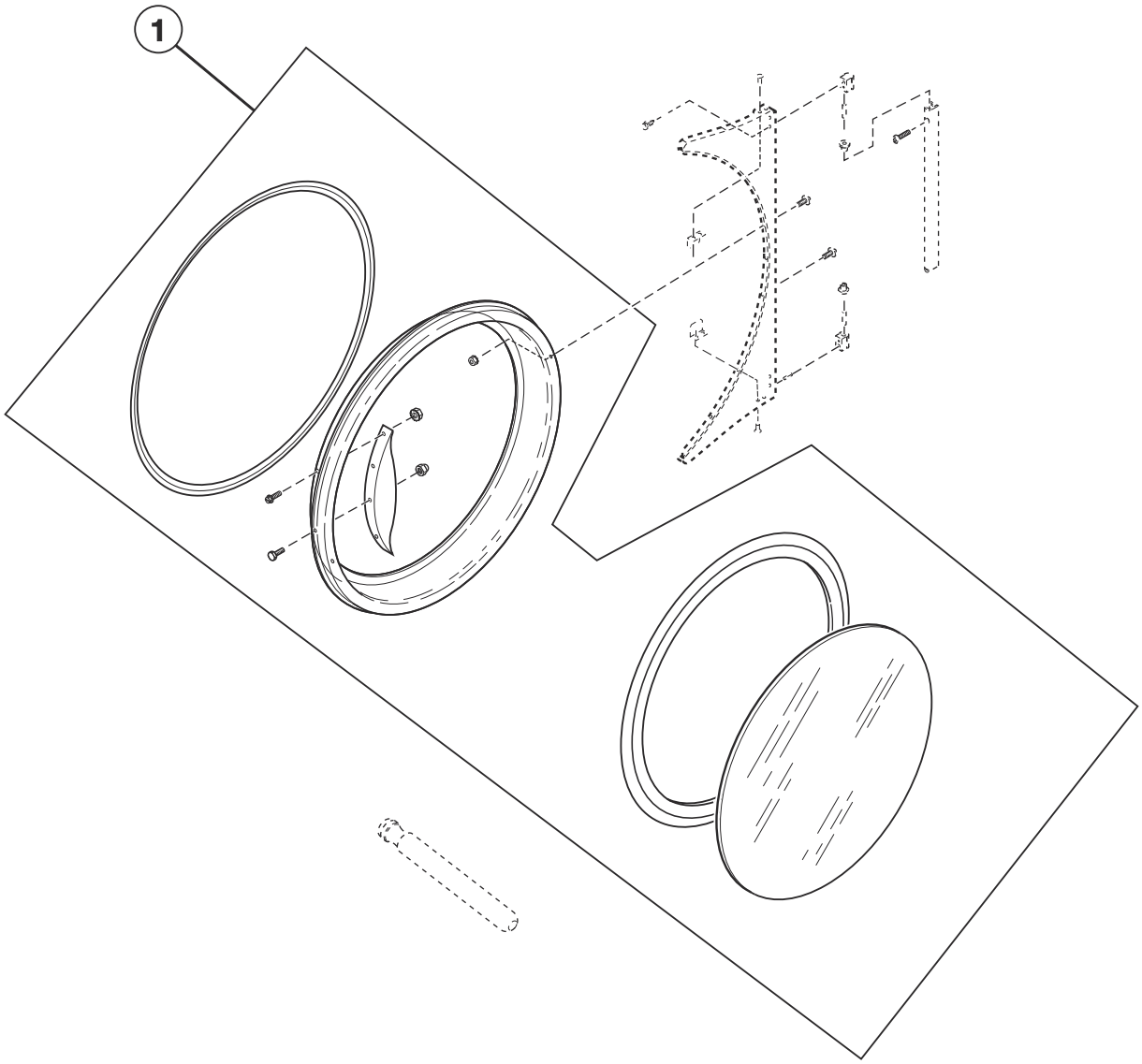

TMB3835P

© Copyright, Alliance Laundry Systems LLC – DO NOT COPY or TRANSMIT

Door Assemblies

REF	PART NO.	DESCRIPTION	COMMENTS
1	44354701	Door Assembly	S models; Stainless steel
	44354702P	Door Assembly	S models; Chrome; Models through Serial No. 2108 with 6 in 5th position of Serial No.; Models through Serial No. 2306 with 0 in 5th position of Serial No.
	44389101	Door Assembly	S models; Mirror polish; Models starting Serial No. 2109 with 6 in 5th position of Serial No.; Models starting Serial No. 2307 with 0 in 5th position of Serial No.
	44354703	Door Assembly	U models; Stainless steel
	44354704	Door Assembly	U models; Chrome; Models through Serial No. 2108 with 6 in 5th position of Serial No.; Models through Serial No. 2306 with 0 in 5th position of Serial No.
	44389104	Door Assembly	U models; Mirror polish; Models starting Serial No. 2109 with 6 in 5th position of Serial No.; Models starting Serial No. 2307 with 0 in 5th position of Serial No.
	44354705	Door Assembly	H models; Stainless steel
	44354707	Door Assembly	H models; Stainless steel with green trim
	44354706	Door Assembly	H models; Chrome; Models through Serial No. 2108 with 6 in 5th position of Serial No.; Models through Serial No. 2306 with 0 in 5th position of Serial No.
	44389102	Door Assembly	H models; Mirror polish; Models starting Serial No. 2109 with 6 in 5th position of Serial No.; Models starting Serial No. 2307 with 0 in 5th position of Serial No.
	44354708	Door Assembly	H models; Chrome with green trim; Models through Serial No. 2108 with 6 in 5th position of Serial No.; Models through Serial No. 2306 with 0 in 5th position of Serial No.
	44389103	Door Assembly	H models; Mirror polish with green trim; Models starting Serial No. 2109 with 6 in 5th position of Serial No.; Models starting Serial No. 2307 with 0 in 5th position of Serial No.
	44354709	Door Assembly	B and P models; Black
	44354712	Door Assembly	B models with 6 in 5th position of Serial No.; Black with orange seal
	44354710LG	Door Assembly	P models; Light gray

© Copyright, Alliance Laundry Systems LLC – DO NOT COPY or TRANSMIT

Door Components

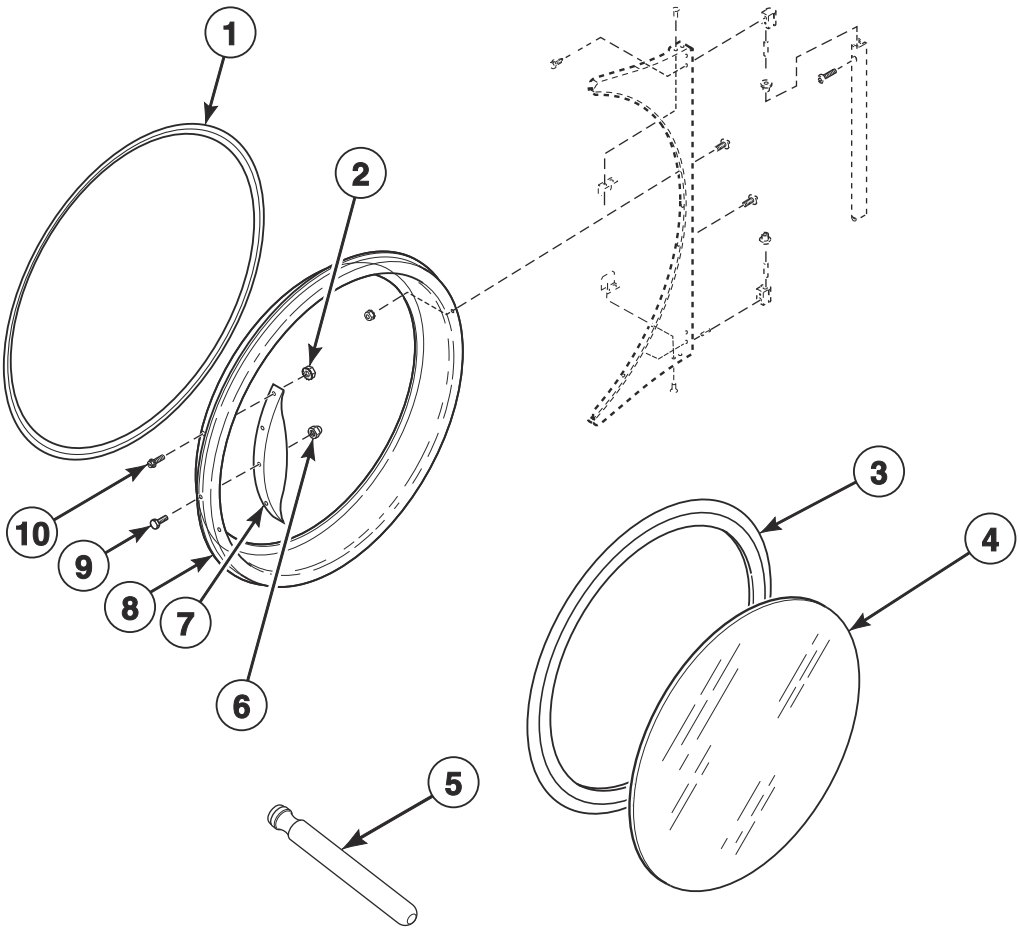

TMB3835PA

© Copyright, Alliance Laundry Systems LLC – DO NOT COPY or TRANSMIT

Door Components

REF	PART NO.	DESCRIPTION	COMMENTS
	70650401	Door Glass Label	H models
	70707701	Door Glass Label	S models
	70707501	Max Fill Line Label	
1	70296802	Door Ring Gasket	H models with chrome handle
	44008201P	Door Ring Gasket	
2	44088001	Nut	B, H and S models; 4 required
3	70211902P	Door Seal Kit	Use Loctite 414 for seal
	70211906P	Door Glass Seal Kit	B models with 6 in 5th position of Serial No.; Orange; Use Loctite 414 for seal
4	44008405	Door Glass	H models; Green trim
	44008401P	Door Glass	
5	M4221P4	Door Glass Installation Tool	
6	M414215	Nut	For door strike; Mounts between door strike screw and door handle
7	44007901	Door Handle	B, P, and S models
	44263801	Door Handle	U models; Use 901620 Screw, 800465 Washer, 803871 Screw and 44088001 Nut to attach; 90-degree chrome pull handle
	44370601	Door Handle	H models
8	44354801	Door Ring Assembly	H and S models; Stainless steel
	44354802	Door Ring Assembly	H and S models; Chrome; Models through Serial No. 2108 with 6 in 5th position of Serial No.; Models through Serial No. 2306 with 0 in 5th position of Serial No.
	70689103	Door Ring Assembly	H and S models; Mirror polish; Models starting Serial No. 2109 with 6 in 5th position of Serial No.; Models starting Serial No. 2307 with 0 in 5th position of Serial No.
	44354803	Door Ring Assembly	U models
	44354804	Door Ring Assembly	U models; Chrome; Models through Serial No. 2108 with 6 in 5th position of Serial No.; Models through Serial No. 2306 with 0 in 5th position of Serial No.
	70689104	Door Ring Assembly	U models; Mirror polish; Models starting Serial No. 2109 with 6 in 5th position of Serial No.; Models starting Serial No. 2307 with 0 in 5th position of Serial No.
	44354808LG	Door Ring Assembly	P models; Light gray
	44354807B	Door Ring Assembly	B and P models
9	M400661	Screw	Door Strike
10	70442101	Screw	B, H, P and S models; 4 required

© Copyright, Alliance Laundry Systems LLC – DO NOT COPY or TRANSMIT

Hinge Components

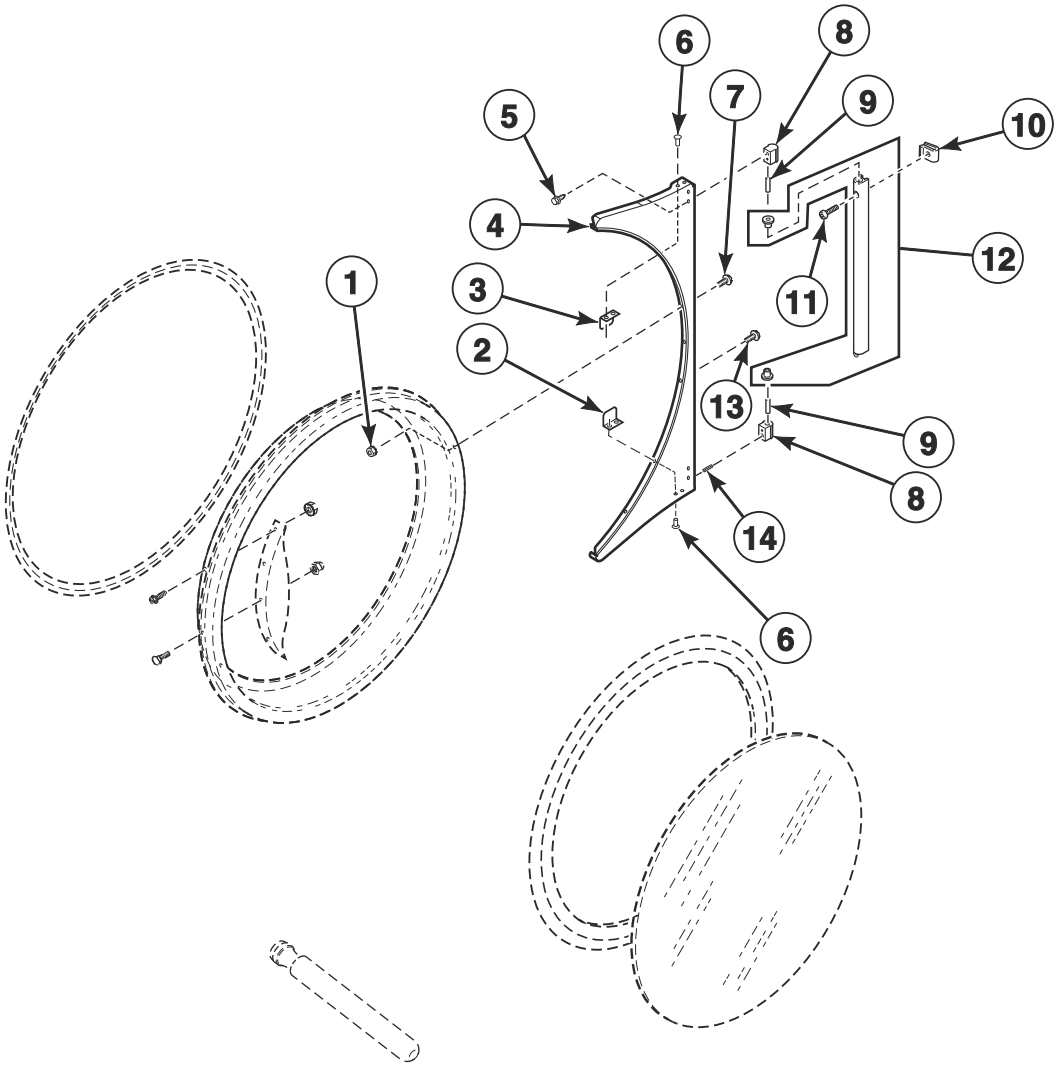

TMB3993P

© Copyright, Alliance Laundry Systems LLC – DO NOT COPY or TRANSMIT

Hinge Components

REF	PART NO.	DESCRIPTION	COMMENTS
1	44088001	Nut	
2	70727901	Door Switch Actuator	Bottom
3	70532105	Door Switch Actuator	Top
4	70596614B	Door Hinge Assembly	Black; B and P models
	70596614W	Door Hinge Assembly	B, H, S and U models
	70596603	Door Hinge Assembly	H and S models; Chrome; Models through Serial No. 2108 with 6 in 5th position of Serial No.; Models through Serial No. 2306 with 0 in 5th position of Serial No.
	70596608	Door Hinge Assembly	H and S models; Mirror polish; Models starting Serial No. 2109 with 6 in 5th position of Serial No.; Models starting Serial No. 2307 with 0 in 5th position of Serial No.
	70596604	Door Hinge Assembly	H, S and U models; Stainless steel
	70596614LG	Door Hinge Assembly	P and U models; Light gray
5	70576101	Screw	3 required
6	70058501	Pop Rivet	2 required
7	44349101	Screw	6 required
8	M4773P3	Hinge Cam Kit	Black; B and P models
	M4772P3	Hinge Cam Kit	H, P, S and U models
	70622401	Hinge Cam Kit	H and S models; Chrome
9	70071401	Pin	
10	70030401	Nut	
11	70407301	Screw	Black; B and P models
	70033502	Screw	H, P, S and U models
12	70597603	Door Hinge Lug Assembly	Black; B and P models
	70597601	Door Hinge Lug Assembly	H, P, S and U models
	70597602	Door Hinge Lug Assembly	H and S models; Chrome
13	70607603	Screw	
14	70436301	Screw	

© Copyright, Alliance Laundry Systems LLC – DO NOT COPY or TRANSMIT

Cylinder and Trunnion Components

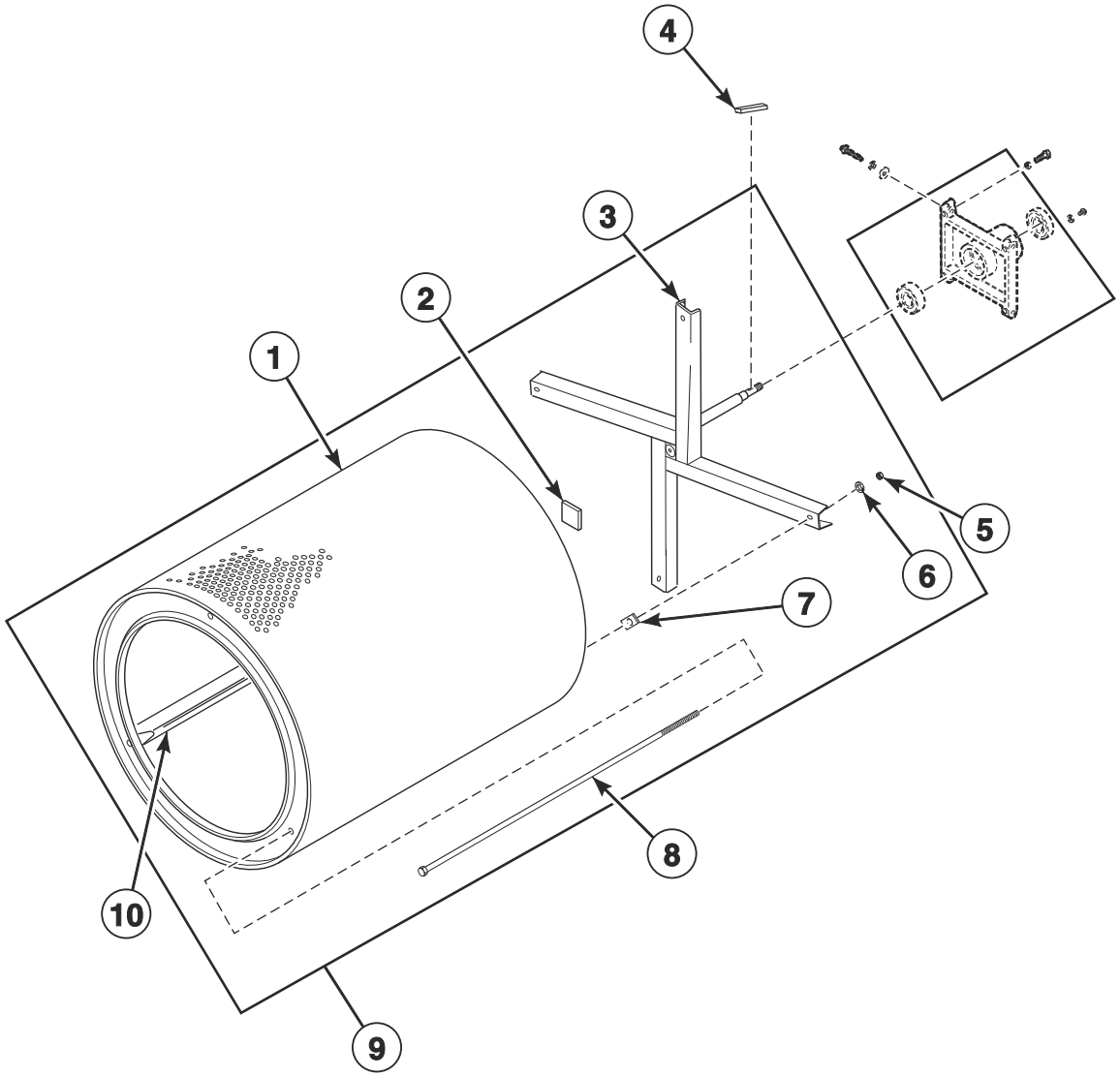

TMB3796P

© Copyright, Alliance Laundry Systems LLC – DO NOT COPY or TRANSMIT

Cylinder and Trunnion Components

REF	PART NO.	DESCRIPTION	COMMENTS
1	44057201P	Cylinder Kit	Galvanized; Non-moisture sensing
	44198301P	Cylinder Assembly	Galvanized; Moisture sensing
	44057301P	Cylinder Kit	Stainless steel; Non-moisture sensing
	44198302	Cylinder Assembly	Stainless steel; Moisture sensing
2	M402144	Felt Pad	
3	44208001P	Trunnion Assembly	Spider; Non-moisture sensing
	44207901P	Trunnion Assembly	Moisture sensing
4	M400008	Key	Half moon
5	M404993	Nut	
6	M400015	Washer	4 required
7	M401402	Spacer	Adjustment between cylinder and trunnion
8	M404992	Rib Rod	
9	44195701P	Cylinder and Trunnion Assembly	Galvanized; Non-moisture sensing
	44195702P	Cylinder and Trunnion Assembly	Stainless steel; Non-moisture sensing
	44195705P	Cylinder and Trunnion Assembly	Galvanized; Moisture sensing
	44195706	Cylinder and Trunnion Assembly	Stainless steel; Moisture sensing
10	44191202	Cylinder Rib Assembly	Moisture sensing
	M403003	Cylinder Rib	Non-moisture sensing; Galvanized
	44076301	Cylinder Rib	Non-moisture sensing; Stainless steel

© Copyright, Alliance Laundry Systems LLC – DO NOT COPY or TRANSMIT

Bearing Components

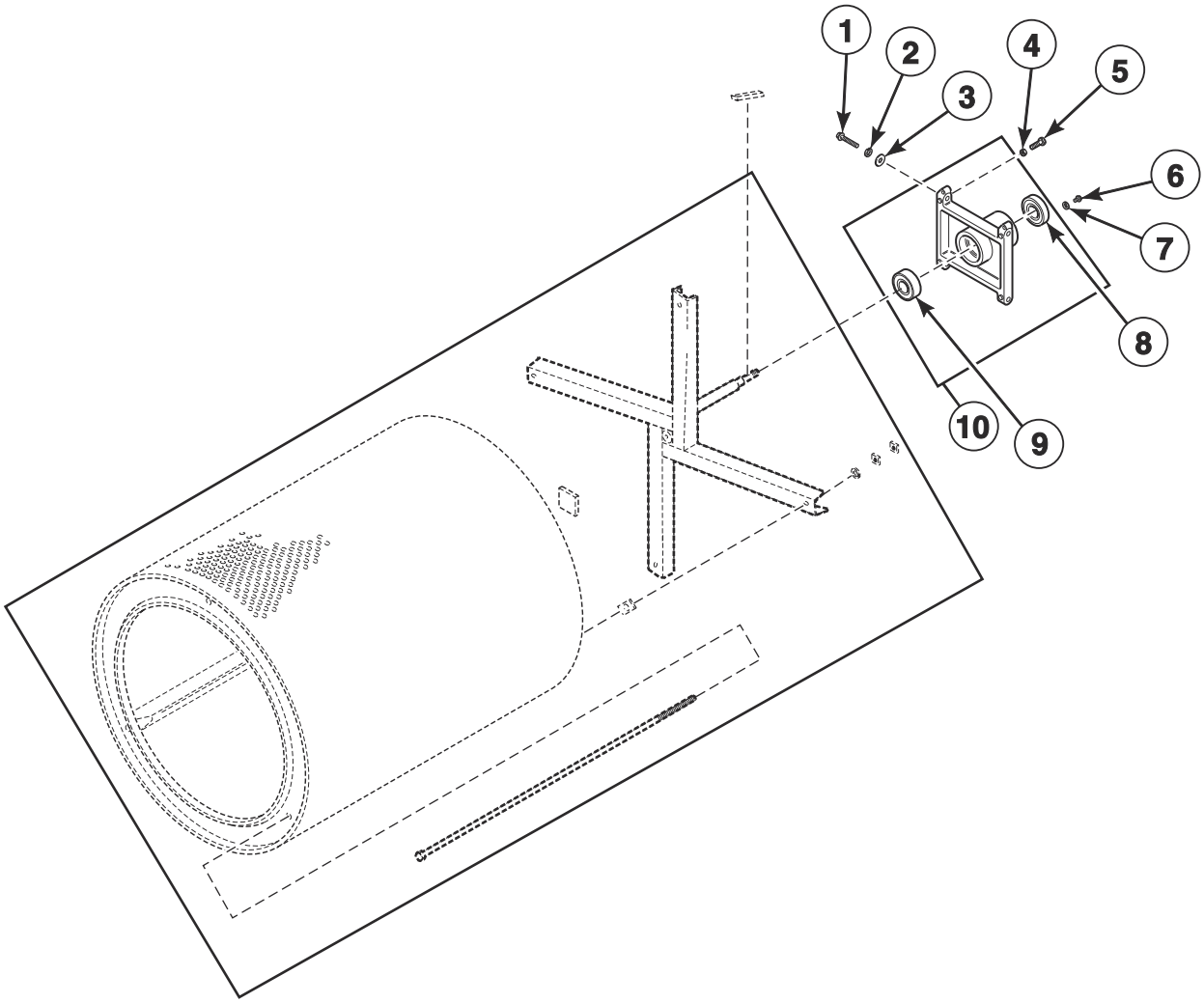

TMB2123PA

© Copyright, Alliance Laundry Systems LLC – DO NOT COPY or TRANSMIT

Bearing Components

REF	PART NO.	DESCRIPTION	COMMENTS
	M4640P3	Trunnion and Bearing Assembly	Non-moisture sensing
	44336301	Trunnion and Bearing Assembly	Moisture sensing
	M4644P3	Housing and Trunnion Assembly	Includes bearing; Non-moisture sensing
	44336302	Housing and Trunnion Assembly	Moisture sensing
1	M400063	Screw	4 required
2	M400015	Washer	4 required
3	70261401	Washer	4 required
4	M400026	Nut	4 required
5	M400650	Bolt	2 required
6	70187201	Screw	4 required
7	20103	Washer	4 required
8	M413923P	Bearing	
9	44041901P	Ball Bearing	
10	44375001P	Trunnion Assembly	Includes bearing

© Copyright, Alliance Laundry Systems LLC – DO NOT COPY or TRANSMIT

Moisture Sensing Components

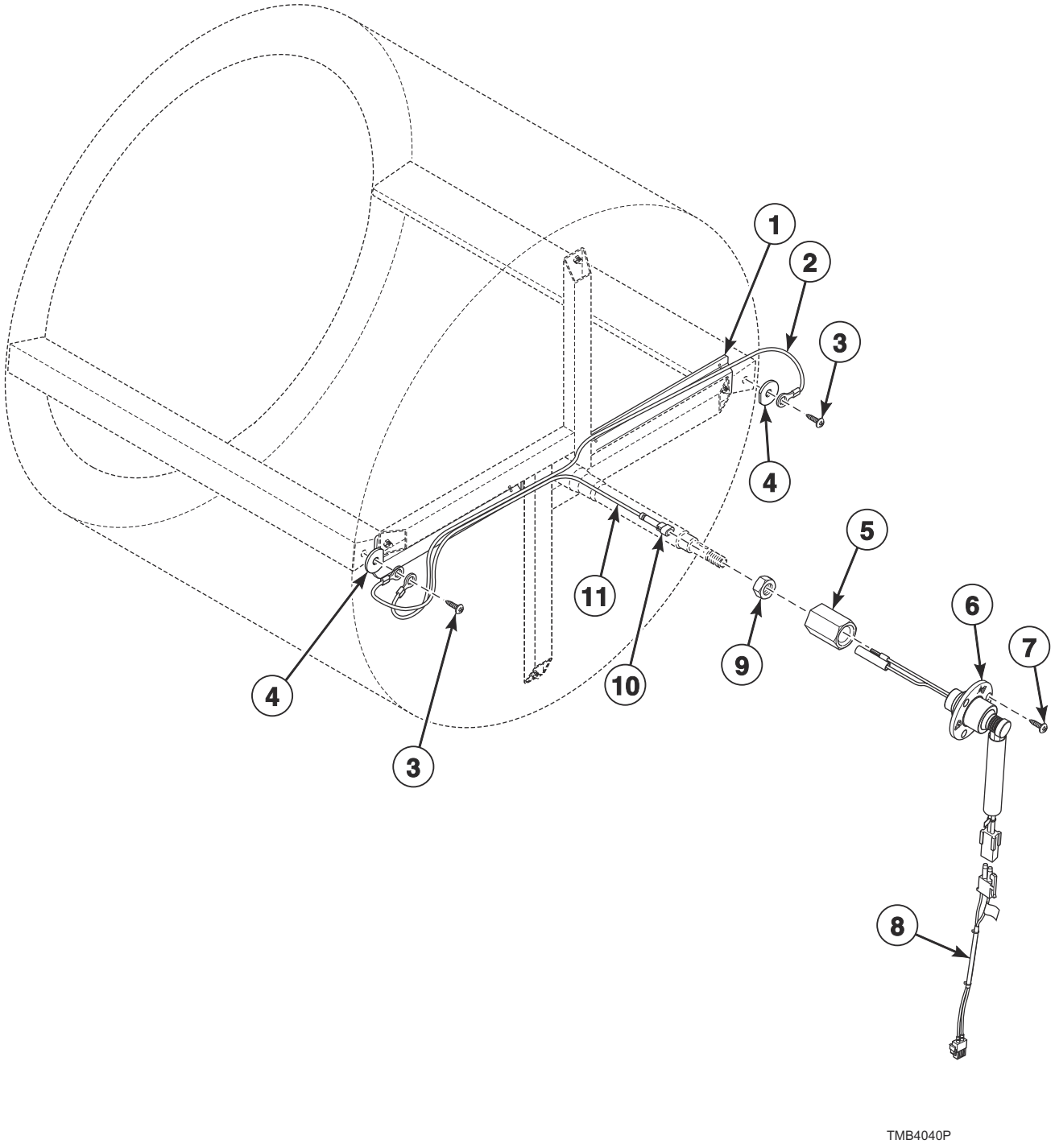

© Copyright, Alliance Laundry Systems LLC – DO NOT COPY or TRANSMIT

Moisture Sensing Components

REF	PART NO.	DESCRIPTION	COMMENTS
	44344702	Moisture Sensing Harness Kit	
	55881	Harness Strap	Use with item 1
	44375503	Adapter Harness	Goes to I/O Board
1	44239101	Wireway Channel	
2	44208601	Rib Wire	
3	44338901	Screw	
4	44238902	Washer	
5	44224401	Slip Ring Holder	
6	44222702	Slip Ring Assembly	
7	70442101	Screw	
8	44375501	Moisture Sensor Harness	Goes from item 6 to 44375503 Adapter Harness
9	M400033	Nut	
10	44370401	1 Circuit Plug Housing	
11	44208702	Shaft Wire	

© Copyright, Alliance Laundry Systems LLC – DO NOT COPY or TRANSMIT

Drive Motor Components

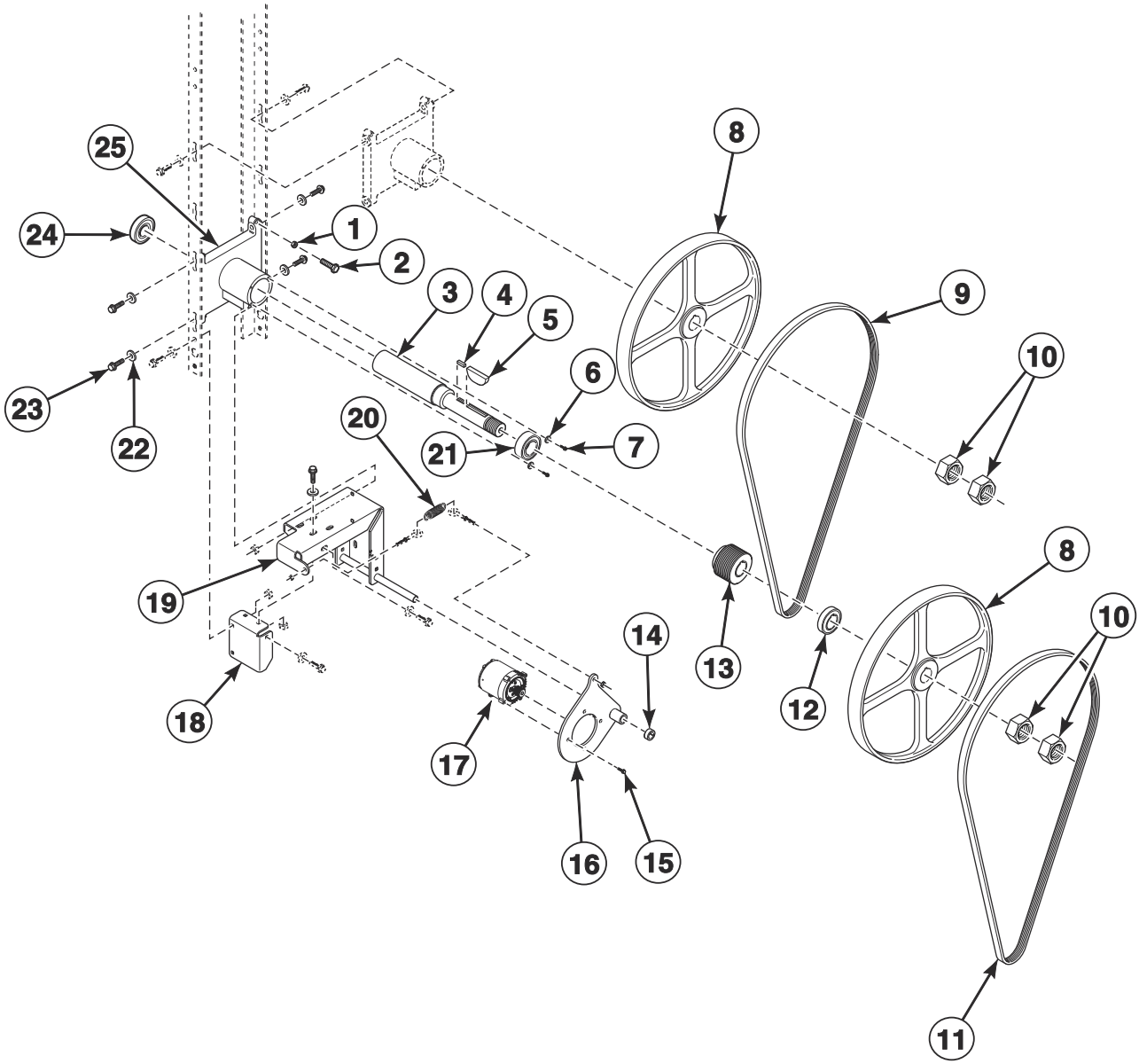

TMB4041P

© Copyright, Alliance Laundry Systems LLC – DO NOT COPY or TRANSMIT

Drive Motor Components

REF	PART NO.	DESCRIPTION	COMMENTS
	44333202	Nut	Use with motor pulley
	70635405	Inverter to Motor Harness	North America models; 120-240 Volt
	70635406	Inverter to Motor Harness	North America models; 380-480 Volt
	70635407	Inverter to Motor Harness	IEC models; 120-240 Volt
	70635408	Inverter to Motor Harness	IEC models; 380-480 Volt
	44375001P	Trunnion Assembly	Includes items 6, 7, 21, 24 and 25
1	M400026	Nut	
2	M400650	Bolt	
3	44303102	Idler Shaft	
4	44309301	Key	
5	M400008	Key	
6	20103	Washer	
7	70187201	Screw	
8	44289502	Pulley	
9	44333301	V-Belt	Upper
10	M400033	Nut	
11	44309402	V-Belt	Lower
12	44306801	Idler Spacer	
13	44374001	Micro V Pulley	
14	70467001	Shaft Collar	
15	44364602	Screw	
16	44311501	Motor Pivot Plate Weldment	
17	44355005P	Drive Motor	.50 HP; 240 Volt
	44355006P	Drive Motor	.50 HP; 480 Volt
18	44325801	Motor Pivot Support Bracket	
19	44327001	Motor Pivot Bracket Weldment	
20	F8440701	Extension Spring	
21	M413923P	Bearing	
22	70261401	Washer	4 required
23	805213	Screw	4 required
24	44041901P	Ball Bearing	
25	M413826P	Trunnion Housing	

© Copyright, Alliance Laundry Systems LLC – DO NOT COPY or TRANSMIT

Blower and Exhaust Components

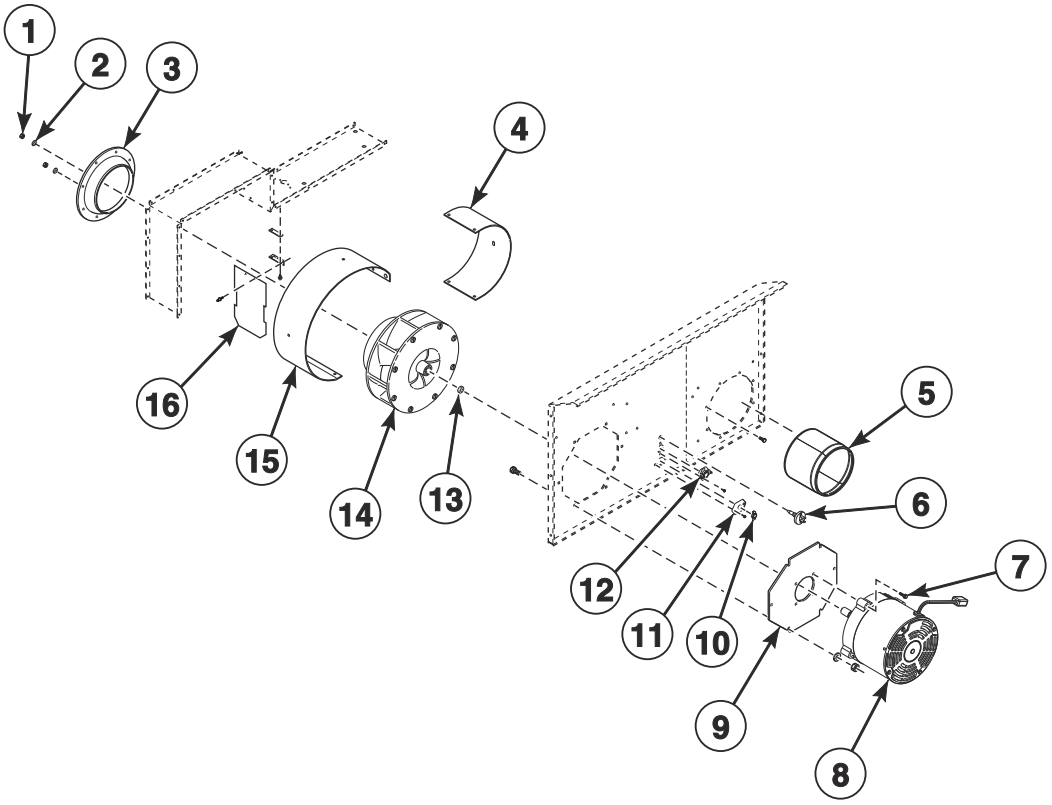

TMB4033P

© Copyright, Alliance Laundry Systems LLC – DO NOT COPY or TRANSMIT

Blower and Exhaust Components

REF	PART NO.	DESCRIPTION	COMMENTS
1	70688901	Nut	
2	F431131	Washer	
3	44305201	Blower Inlet Cone	F75 models; ProCapture models with C in the 16th position
	70303101	Blower Inlet Cone	All other models
4	44308402	Air Exhaust Deflector	F75 models; ProCapture models with C in the 16th position
	44308401	Air Exhaust Deflector	All other models
5	44305002	Thimble Assembly	F75 models; ProCapture models with C in the 16th position
	44327901	Exhaust Pipe Assembly	All other models
6	M414704	Thermistor	
7	44364601	Screw	
8	44354902P	Fan Motor	F75 models; ProCapture models with C in the 16th position; 1.5 HP; 240 Volt
	44354904P	Fan Motor	F75 models; 1.5 HP; 480 Volt
	44354901P	Fan Motor	All other models with 0 in 5th position of Serial No.; Models through Serial No. 2503 with 6 in 5th position of Serial No.; .50 HP; 240 Volt
	44402301P	Fan Motor	All other models starting Serial No. 2503 with 6 in 5th position of Serial No.; .50 HP; 240 Volt
	44354903P	Fan Motor	All other models; .50 HP; 480 Volt
9	44311301	Blower Motor Mounting Plate	F75 models; ProCapture models with C in the 16th position
	44380401	Blower Motor Mounting Plate	All other models
10	70530905	Limit Thermostat	Manual reset
11	44312501	Thermostat Opening Cover	
12	44328003	Limit Thermostat	
13	70599301	Fan Spacer	
14	44267201	Blower Assembly	F75 models; ProCapture models with C in the 16th position
	70302201P	Blower Assembly	All other models
15	44303901	Blower Housing Scroll	F75 models; ProCapture models with C in the 16th position
	44303801	Blower Housing Scroll	All other models
16	44280302	Damper Assembly	F75 models; ProCapture models with C in the 16th position
	44280301	Damper Assembly	All other models

© Copyright, Alliance Laundry Systems LLC – DO NOT COPY or TRANSMIT

Inverter Tray Components

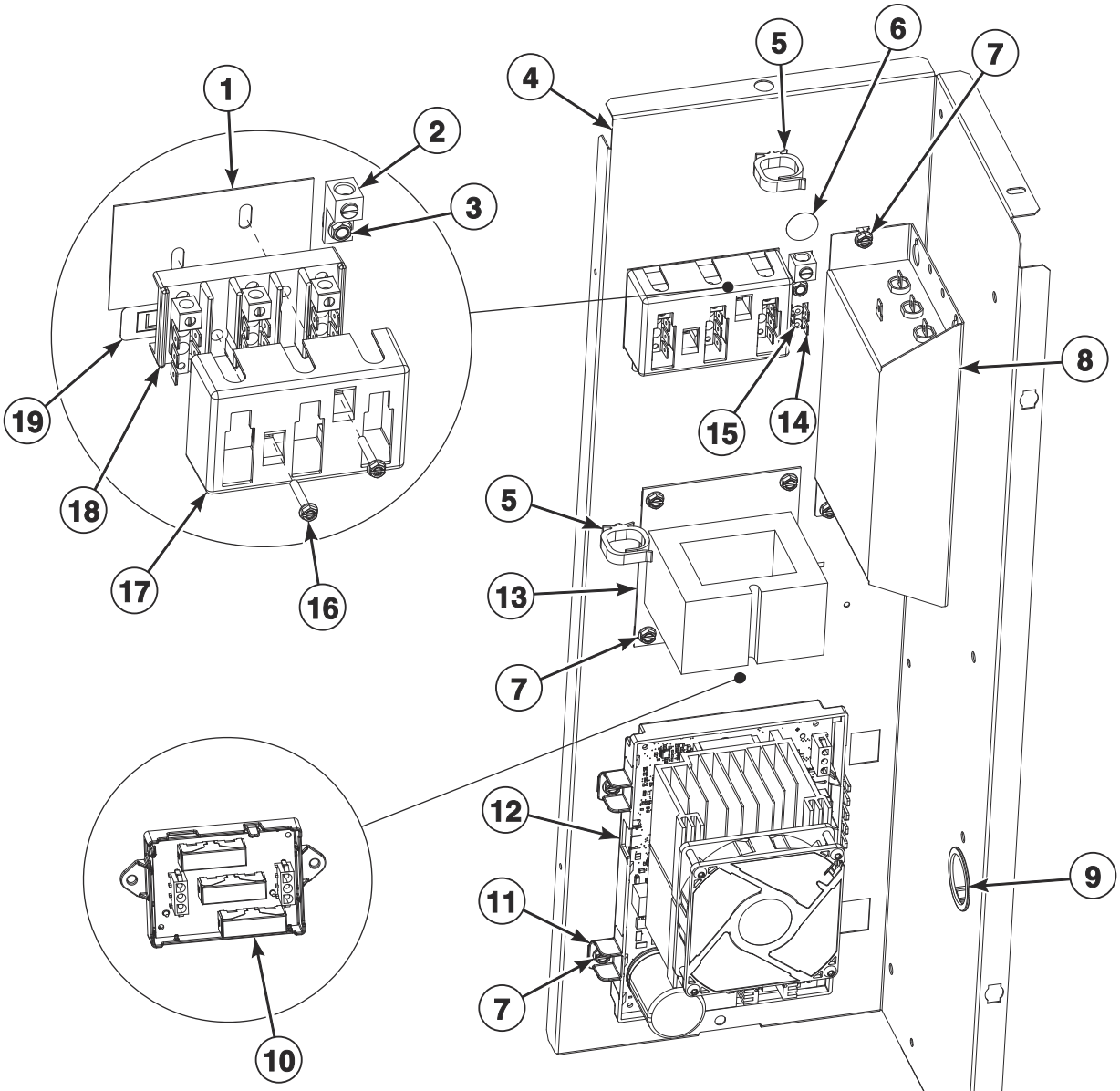

TMB3944P

© Copyright, Alliance Laundry Systems LLC – DO NOT COPY or TRANSMIT

Inverter Tray Components

REF	PART NO.	DESCRIPTION	COMMENTS
	70671001	Inverter Power Conversion Harness	X to B voltage; Gas models
	44375701	Inverter Control Power Harness	T and G market models; 120-240 Volt
	44375703	Inverter Control Power Harness	T and G market models; 380-480 Volt
	44375704	Inverter Control Power Harness	IEC models; 120-240 Volt
	44375706	Inverter Control Power Harness	IEC models; 380-480 Volt
	44375709	Inverter Control Power Harness	T market ProCapture models with C in the 16th position; 200-240 Volt/1 Phase
	44375710	Inverter Control Power Harness	A market ProCapture models with C in the 16th position; 200-240 Volt/1 Phase
	44375401	Harness	Gas and steam models; 120-240 Volt/1 Phase; Power distribution block to EMI filter
	44375402	Harness	Gas and steam models; 380-480 Volt/3 Phase; Power distribution block to EMI filter
	44388401	Power Harness	F75 models; ProCapture models with C in the 16th position; 240 Volt
	44388501	Harness	F75 models; ProCapture models with C in the 16th position; 240 Volt; Fuse board to inverter
1	M413862	Insulator	T and G market models; IEC gas models
2	M411283	Ground Lug Connector	Gas models
3	685837	Screw	Gas models; Use with 44088001 Nut
4	44364201	Inverter Drive Tray	
5	F8449502	Wire Clip	380-480 Volt
6	D516100	Label	Gas models
7	F8206901	Screw	
8	F8591601	EMI Filter	IEC models; 120-240 Volt
	F8637501	EMI Filter	IEC models; 380-480 Volt
9	70346501	Bushing	
10	70683201	Fuse Control Assembly	F75 models; ProCapture models with C in the 16th position; 240 Volt
11	70030501	Expansion Clip	
12	70603601P	Inverter Control Assembly	F75 models; 3 HP; 380-480 Volt
	70603403P	Inverter Control Assembly	F75 models; ProCapture models with C in the 16th position; 3 HP; 240 Volt/3 Phase
	70736502	Inverter Control Assembly	ProCapture models with C in the 16th position; 3 HP; 240 Volt/1 Phase
	70603002P	Inverter Control Assembly	All other models; 1 HP; 120-240 Volt
	70603201P	Inverter Control Assembly	All other models; 1 HP; 380-480 Volt
13	F8491101	Transformer	380-480 Volt
14	00622SG	Terminal	
15	M400003	Pop Rivet	
16	51783	Screw	T and G market models; IEC gas models
17	70333001	Terminal Block Shield	T and G market models; IEC gas models
18	430642	Terminal Block	T and G market models; IEC gas models
19	44286803	Label	Gas models; N and P voltage; L1, L2, L3
	44286801	Label	Gas models; B voltage; L1, N
	44286804	Wire Label	Gas models; X voltage; L1 L2, L1 N, L1 L2 L3

© Copyright, Alliance Laundry Systems LLC – DO NOT COPY or TRANSMIT

Airflow Switch Assembly

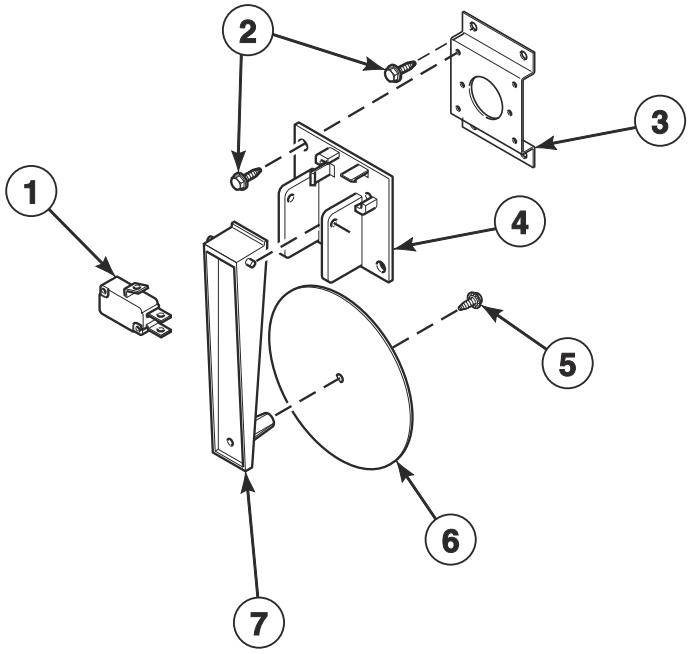

TMB3636P

© Copyright, Alliance Laundry Systems LLC – DO NOT COPY or TRANSMIT

Airflow Switch Assembly

REF	PART NO.	DESCRIPTION	COMMENTS
	70429602	Airflow Switch Assembly	Includes items 1 and 4-7
1	70411901	Switch	
2	430497	Screw	6 required
3	70356301	Switch Bracket	
4	70319602	Airflow Switch and Arm Bracket	
5	430757	Screw	
6	70319202	Airflow Switch Vane	
7	70319401	Airflow Switch Arm	

© Copyright, Alliance Laundry Systems LLC – DO NOT COPY or TRANSMIT

Gas Heater Components - All Models with D, F, N and W in the 7th Position and U Models with V in the 7th Position

Models with 0 or A in the 16th Position

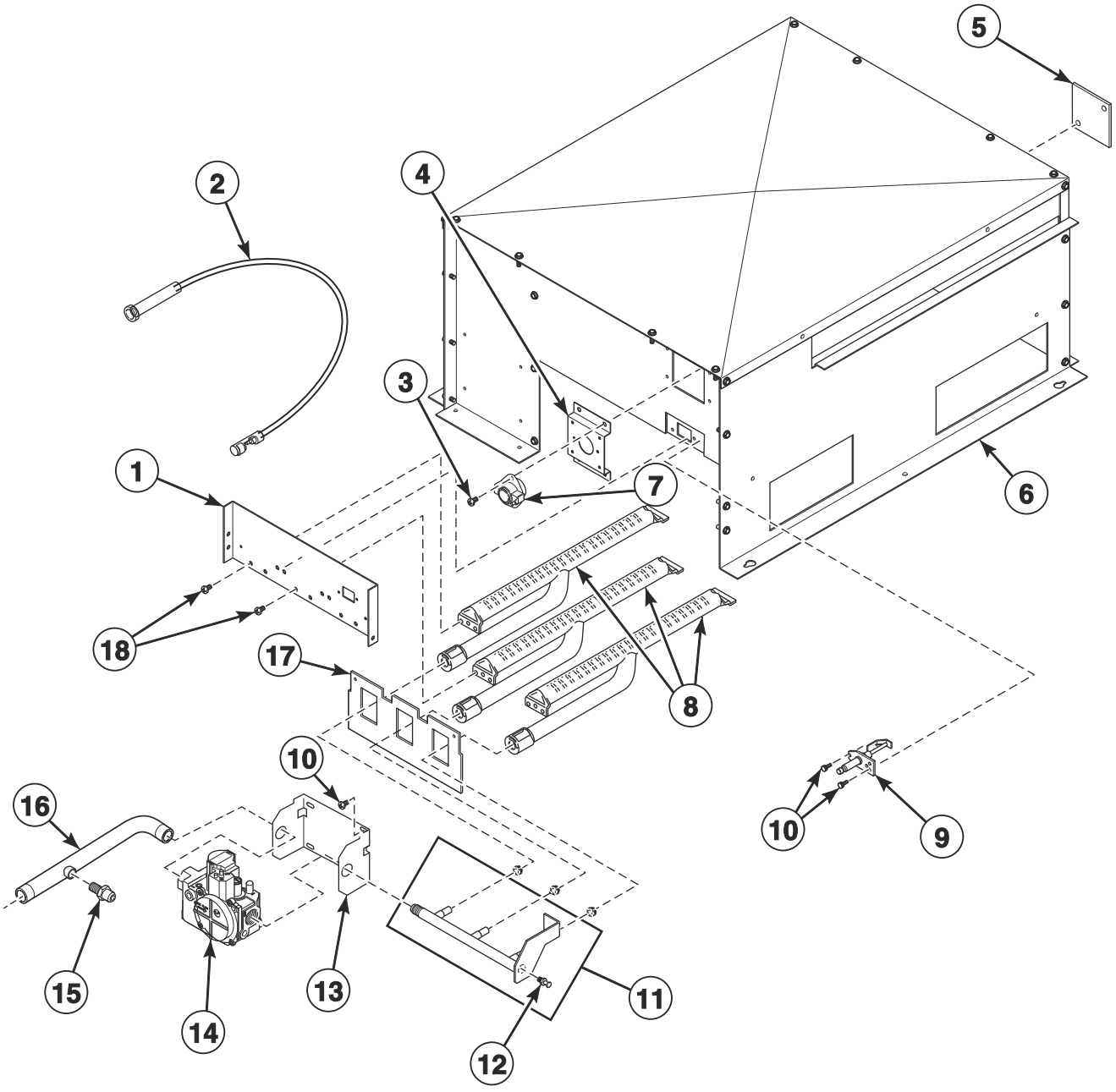

© Copyright, Alliance Laundry Systems LLC – DO NOT COPY or TRANSMIT

Gas Heater Components - All Models with D, F, N and W in the 7th Position and U Models with V in the 7th Position

REF	PART NO.	DESCRIPTION	COMMENTS
	70539501	Notice Label	Australian models Natural Gas (N.G.)
	70544901	Notice Label	Australian models Liquid Petroleum Gas (L.P.)
	D503887	Label	Australian models; Gas
	44178801	Adapter	CE and Australian models; Used to convert from standard to metric thread
	44328802	L.P. Conversion Kit	North America 75 pound models; 0-2000 feet
	44328811	L.P. Conversion Kit	Australian models; 0-2000 feet
	44330302	L.P. Conversion Kit	IEC models; 0-2000 feet
	44328803	L.P. Conversion Kit	F75 models
	70346802	Pipe Plug	F75 models
	44273502	Gas Valve Harness	Double; CE models
	44273501	Gas Valve Harness	Single; All other models
	44366301	Gas Valve/Thermostat Harness	
1	44110301	Burner Support	
2	44239705	High Voltage Suppression Cable	
3	M402797	Screw	2 required
4	70356301	Switch Bracket	
5	70159601	Igniter Cover	
6	44135605	Gas Stove Assembly	Includes item 8
7	44328008	Limit Thermostat	
8	M410541P	Burner Assembly	3 required
9	44328701P	Spark Electrode	
10	51782	Screw	2 required
11	44263104	Spud Holder Weldment	
12	70167601	Plug	
13	44175703	Gas Valve Bracket	
14	44154501P	Gas Valve	F75 and North America models; N.G.
	44154502P	Gas Valve	F75 and North America models; L.P.
	44298501	Gas Valve	Australian models; N.G.
	44298504	Gas Valve	Australian models; L.P.
	44178301P	Gas Valve	CE models; N.G.
	44178302P	Gas Valve	CE models; L.P.
	44154505	Gas Valve	All other models; N.G.
	44154506	Gas Valve	All other models; L.P.
15	44231601	Pressure Fitting	CE and Australian models
16	44377001	Lead-In Pipe	A, K and U market models
	44377101	Lead-In Pipe	All other models
17	44135201	Rear Access Plate	
18	70240301	Screw	6 required

© Copyright, Alliance Laundry Systems LLC – DO NOT COPY or TRANSMIT

Gas Heater Components - Models with V in the 7th Position

All Models Except U Models; Models with 0 or A in the 16th Position

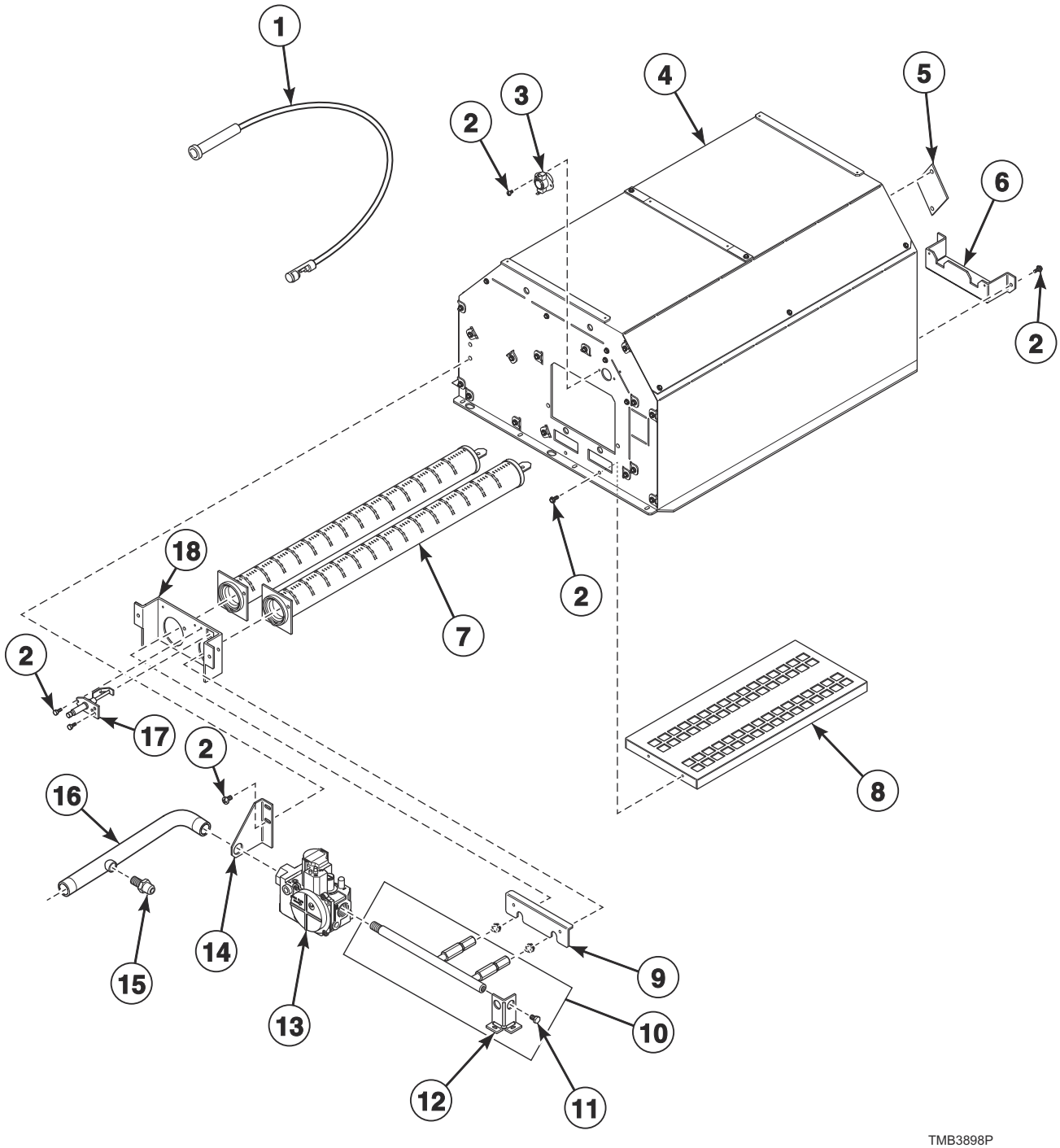

© Copyright, Alliance Laundry Systems LLC – DO NOT COPY or TRANSMIT

Gas Heater Components - Models with V in the 7th Position

REF	PART NO.	DESCRIPTION	COMMENTS
	70539501	Notice Label	Australian models; Natural Gas (N.G.)
	70544901	Notice Label	Australian models; Liquid Petroleum Gas (L.P.)
	D503887	Label	Australian models; Gas
	44178801	Adapter	CE and Australian models; Used to convert from standard to metric thread
	44355202	L.P. Conversion Kit	T and G market models; 0-2000 feet
	44328812	L.P. Conversion Kit	Australian models; 0-2000 feet
	44330307	L.P. Conversion Kit	IEC models; 0-2000 feet
	44273502	Gas Valve Harness	Double; CE models
	44273501	Gas Valve Harness	Single; All other models
	44366301	Gas Valve/Thermostat Harness	
1	44239704	High Voltage Suppression Cable	
2	430497	Screw	2 required
3	44328005	Limit Thermostat	
4	44352701	Gas Heater Assembly	
5	70159601	Igniter Cover	Included with item 4
6	44341801	Burner Support	Included with item 4
7	70396201P	Gas Burner	2 required
8	44354401	Burner Grate	Included with item 4
9	44353901	Burner Cover	
10	44340802	Orifice Adapter	
11	70167601	Plug	
12	44342101	Orifice Adapter Support	
13	44154501P	Gas Valve	North America models; N.G.
	44154502P	Gas Valve	North America models; L.P.
	44298501	Gas Valve	Australian models; N.G.
	44298504	Gas Valve	Australian models; L.P.
	44178301P	Gas Valve	CE models; N.G.
	44178302P	Gas Valve	CE models; L.P.
	44154505	Gas Valve	All other models; N.G.
	44154506	Gas Valve	All other models; L.P.
14	44340701	Gas Valve Bracket	
15	44231601	Pressure Fitting	CE and Australian models
16	44377001	Lead-In Pipe	A, K and U market models
	44377101	Lead-In Pipe	All other models
17	70548701P	Spark Electrode	
18	44341801	Burner Support	Included with item 4

© Copyright, Alliance Laundry Systems LLC – DO NOT COPY or TRANSMIT

Gas Heater Components - ProCapture Models

Models with C in the 16th Position

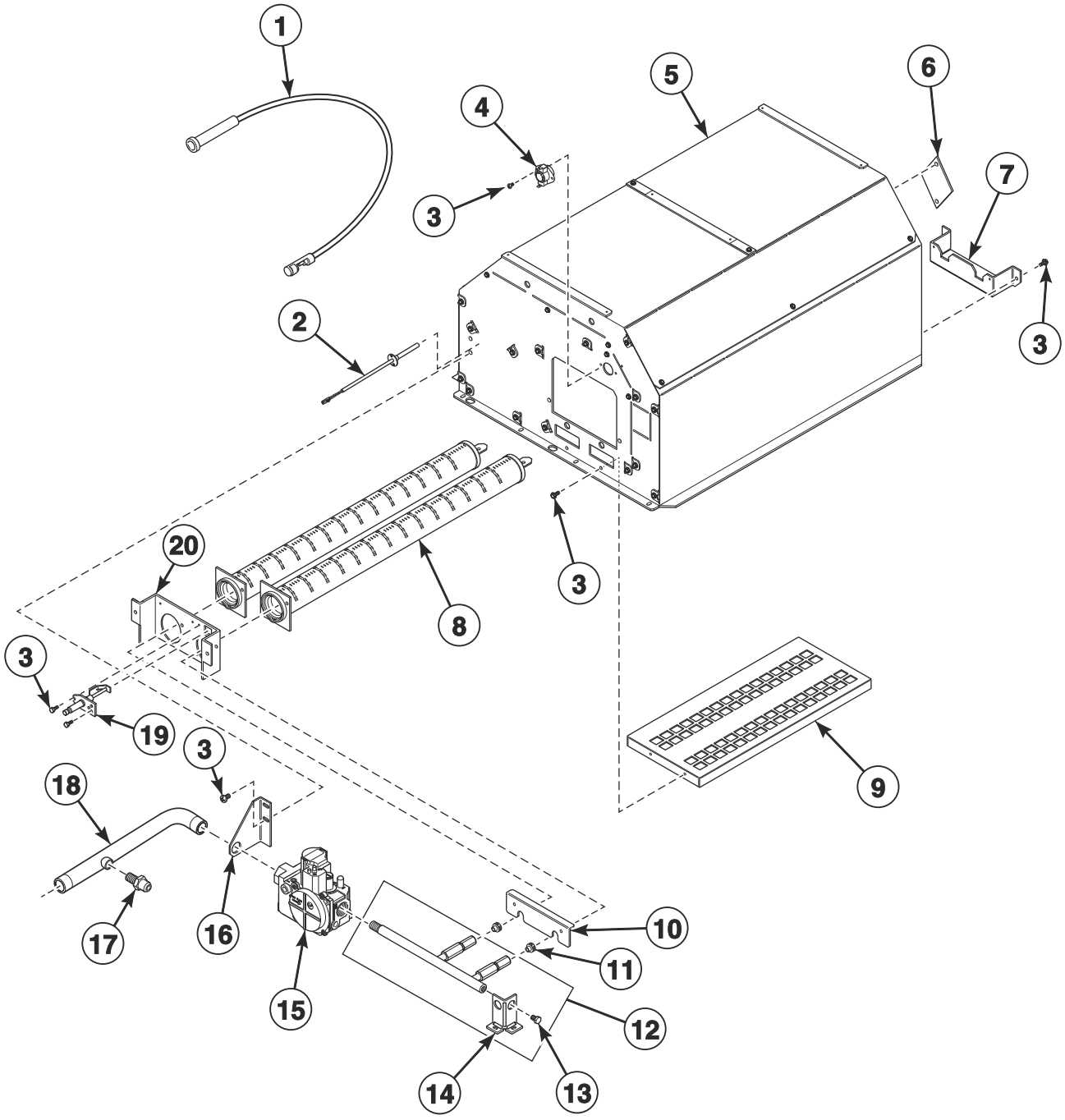

© Copyright, Alliance Laundry Systems LLC – DO NOT COPY or TRANSMIT

Gas Heater Components - ProCapture Models

REF	PART NO.	DESCRIPTION	COMMENTS
	44273501	Gas Valve Harness	Single; T market models
	44273502	Gas Valve Harness	Double; Australian models
	44366301	Gas Valve/Thermostat Harness	
	44357503	High Altitude Orifice Kit	
	70539501	Notice Label	Australian models
	D503887	Label	Australian models
	44178801	Adapter	Australian models; Used to convert from standard to metric thread
1	44239704	High Voltage Suppression Cable	
2	44394801	Probe Thermistor	
3	430497	Screw	2 required
4	44328001	Limit Thermostat	
5	44396501	Gas Heater Assembly	
6	70159601	Igniter Cover	Included with item 5
7	44341801	Burner Support	Included with item 5
8	70396201P	Gas Burner	2 required
9	44354401	Burner Grate	Included with item 5
10	44353901	Burner Cover	
11	70684142	Burner Orifice	Drill no. 20 (4.09 mm); 0-2,000 feet
	70684139	Burner Orifice	Drill no. 23 (3.91 mm); 2,001-4,000 feet
	70684137	Burner Orifice	Drill no. 25 (3.80 mm); 4,001-6,000 feet
	70684135	Burner Orifice	Drill no. 27 (3.66 mm); 6,001-8,000 feet
	70684133	Burner Orifice	3.50 mm; 8,001-10,000 feet
12	44340802	Orifice Adapter	
13	70167601	Plug	
14	44342101	Orifice Adapter Support	
15	44154501P	Gas Valve	T market models
	44178301P	Gas Valve	Australian models
16	44340701	Gas Valve Bracket	
17	44231601	Pressure Fitting	Australian models
18	44377101	Lead-In Pipe	T market models
	44377001	Lead-In Pipe	Australian models
19	70548701P	Spark Electrode	
20	44341801	Burner Support	Included with item 5

© Copyright, Alliance Laundry Systems LLC – DO NOT COPY or TRANSMIT

Burner Orifices - All Models with D, F, N and W in the 7th Position and U Models with V in the 7th Position

Models with 0 or A in the 16th Position

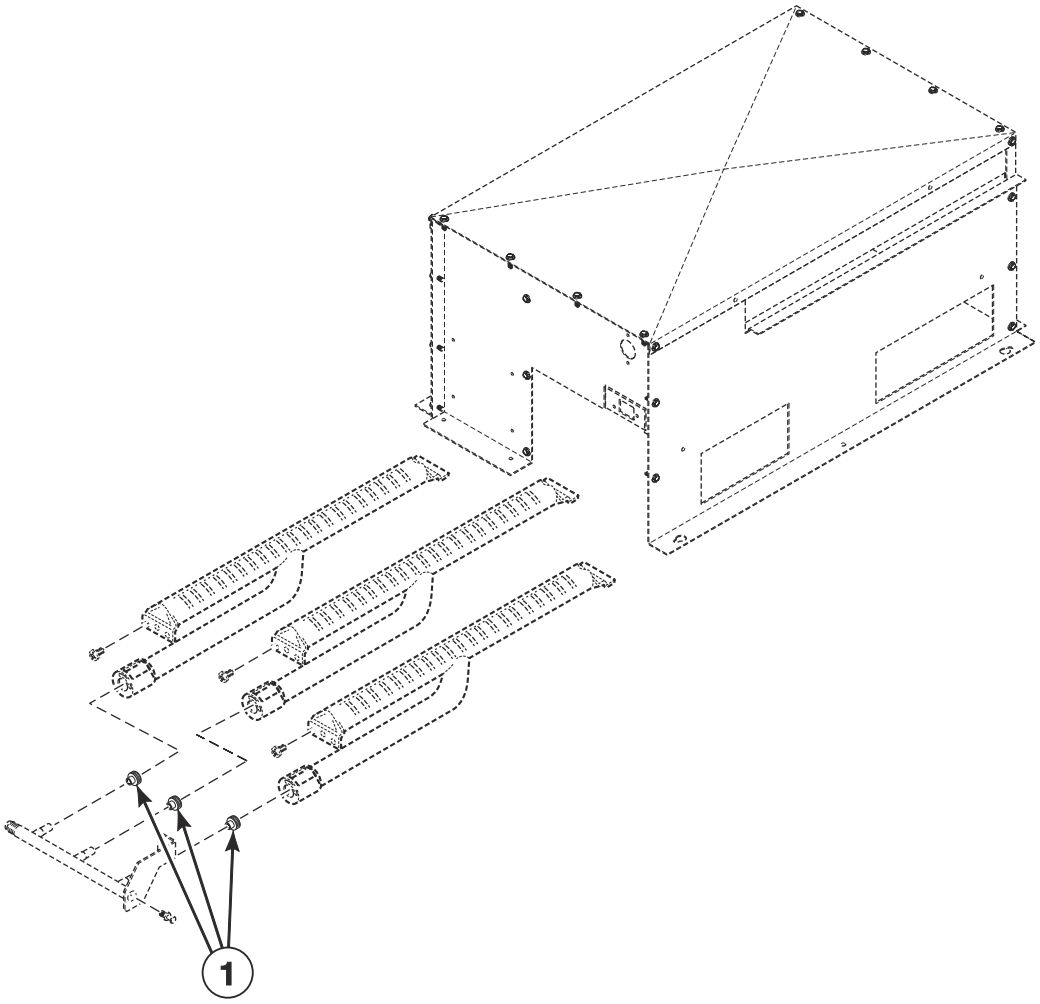

TMB3600P

© Copyright, Alliance Laundry Systems LLC – DO NOT COPY or TRANSMIT

Burner Orifices - All Models with D, F, N and W in the 7th Position and U Models with V in the 7th Position

REF	PART NO.	DESCRIPTION	COMMENTS
	44357503	High Altitude Orifice Kit	North America 75 pound Natural Gas (N.G.) models
	44357504	High Altitude Orifice Kit	North America 75 pound Liquid Petroleum Gas (L.P.) models
	44357505	High Altitude Orifice Kit	Model UTF75N
	44357506	High Altitude Orifice Kit	Model UTF75L
1	70684134	Burner Orifice	Standard 75 pound models; N.G.; Drill no. 28 (3.57 mm); 0-2,000 feet
	70684131	Burner Orifice	Standard 75 pound models; N.G.; 3.40 mm; 2,001-4,000 feet
	70684130	Burner Orifice	Standard 75 pound models; N.G.; 3.30 mm; 4,001-6,000 feet
	70684128	Burner Orifice	Standard 75 pound models; N.G.; Drill no. 1/8 (3.18 mm); 6,001-8,000 feet
	70684126	Burner Orifice	Standard 75 pound models; N.G.; Drill no. 31 (3.05 mm); 8,001-10,000 feet
	70684110	Burner Orifice	Standard 75 pound models with 2nd digit A, G, H, J, K and T; L.P.; Drill no. 44 (2.18 mm); 0-2,000 feet
	70684109	Burner Orifice	Standard 75 pound models with 2nd digit A, G, H, J, K and T; L.P.; Drill no. 45 (2.08 mm); 2,001-4,000 feet
	70684107	Burner Orifice	Standard 75 pound models with 2nd digit A, G, H, J, K and T; L.P.; Drill no. 47 (1.99 mm); 4,001-6,000 feet
	70684106	Burner Orifice	Standard 75 pound models with 2nd digit A, G, H, J, K and T; L.P.; Drill no. 48 (1.93 mm); 6,001-8,000 feet
	70684105	Burner Orifice	Standard 75 pound models with 2nd digit A, G, H, J, K and T; L.P.; Drill no. 49 (1.85 mm); 8,001-10,000 feet
	70684104	Burner Orifice	CE standard 75 pound models; L.P.; Drill no. 50 (1.78 mm); 0-2,000 feet
	70684158	Burner Orifice	CE standard 75 pound models; L.P.; Drill no. 51 (1.70 mm); 2,001-4,000 feet
	70684103	Burner Orifice	CE standard 75 pound models; L.P.; Drill no. 52 (1.61 mm); 4,001-6,000 feet
	70684102	Burner Orifice	CE standard 75 pound models; L.P.; Drill no. 1/16 (1.59 mm); 6,001-8,000 feet
	70684101	Burner Orifice	CE standard 75 pound models; L.P.; Drill no. 53 (1.51); 8,001-10,000 feet
	70684108	Burner Orifice	Standard 75 pound J market models; L.P.; Drill no. 46 (2.06 mm); 0-2,000 feet
	70684138	Burner Orifice	Eco models; N.G.; Drill no. 24 (3.86 mm); 0-2,000 feet
	70684135	Burner Orifice	Eco models; N.G.; Drill no. 27 (3.66 mm); 2,001-4,000 feet
	70684134	Burner Orifice	Eco models; N.G.; Drill no. 28 (3.57 mm); 4,001-6,000 feet
	70684132	Burner Orifice	Eco models; N.G.; Drill no. 29 (3.45 mm); 6,001-8,000 feet
	70684130	Burner Orifice	Eco models; N.G.; 3.30 mm; 8,001-10,000 feet
	70684142	Burner Orifice	F75 models; N.G.; Drill no. 20 (4.09 mm); 0-2,000 feet
	70684139	Burner Orifice	F75 models; N.G.; Drill no. 23 (3.91 mm); 2,001-4,000 feet
	70684137	Burner Orifice	F75 models; N.G.; Drill no. 25 (3.80 mm); 4,001-6,000 feet
	70684135	Burner Orifice	F75 models; N.G.; Drill no. 27 (3.66 mm); 6,001-8,000 feet
	70684133	Burner Orifice	F75 models; N.G.; 3.50 mm; 8,001-10,000 feet
	70684114	Burner Orifice	F75 models; L.P.; Drill no. 42 (2.37 mm); 0-2,000 feet
	70684112	Burner Orifice	F75 models; L.P.; Drill no. 43 (2.26 mm); 2,001-4,000 feet
	70684110	Burner Orifice	F75 models; L.P.; Drill no. 44 (2.18 mm); 4,001-6,000 feet
	70684109	Burner Orifice	F75 models; L.P.; Drill no. 45 (2.08 mm); 6,001-8,000 feet
	70684107	Burner Orifice	F75 models; L.P.; Drill no. 47 (1.99 mm); 8,001-10,000 feet

© Copyright, Alliance Laundry Systems LLC – DO NOT COPY or TRANSMIT

Burner Orifices - Models with V in the 7th Position

All Models Except U Models; Models with 0 or A in the 16th Position

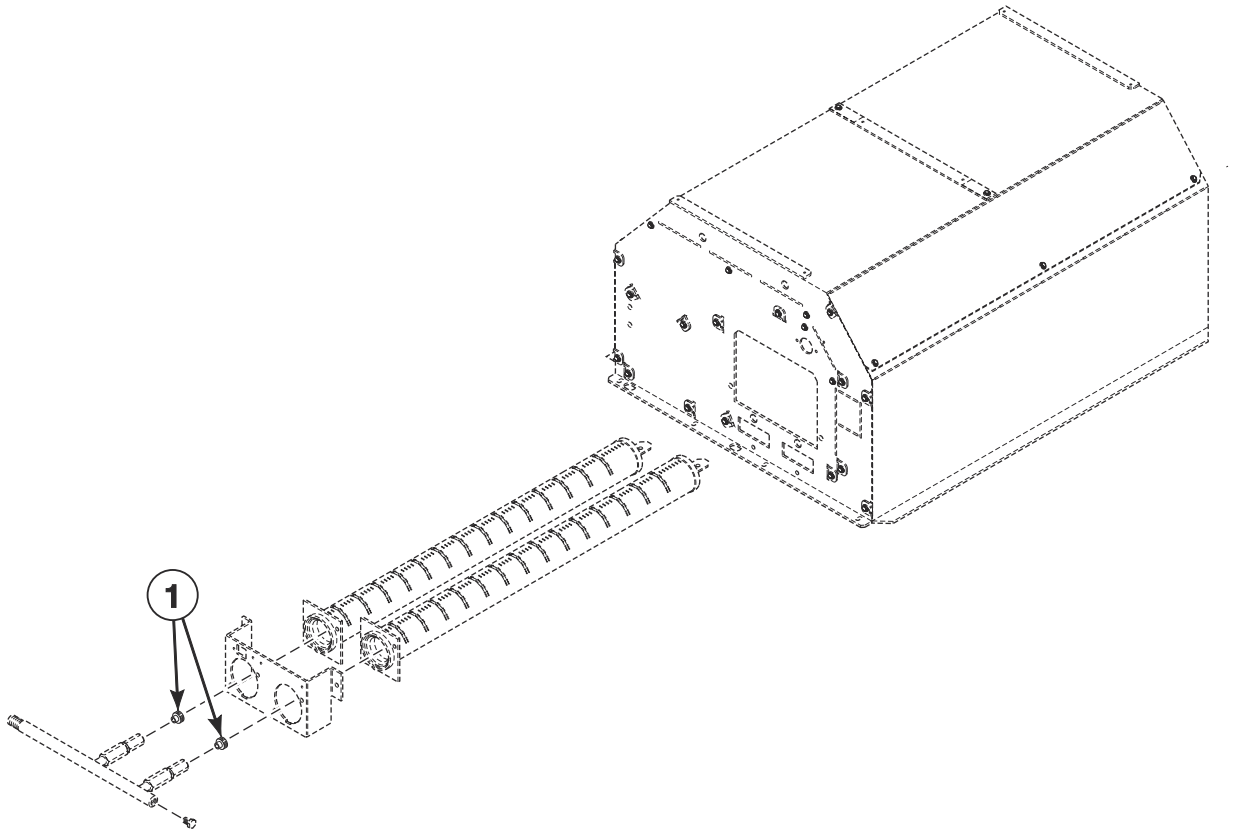

TMB3717P

© Copyright, Alliance Laundry Systems LLC – DO NOT COPY or TRANSMIT

Burner Orifices - Models with V in the 7th Position

REF	PART NO.	DESCRIPTION	COMMENTS
	44357503	High Altitude Orifice Kit	North America Natural gas (N.G.) models
	44357504	High Altitude Orifice Kit	North America Liquid Petroleum Gas (L.P) models
1	70684142	Burner Orifice	Standard N.G. models; Drill no. 20 (4.09 mm); 0-2,000 feet
	70684139	Burner Orifice	Standard N.G. models; Drill no. 23 (3.91 mm); 2,001-4,000 feet
	70684137	Burner Orifice	Standard N.G. models; Drill no. 25 (3.80 mm); 4,001-6,000 feet
	70684135	Burner Orifice	Standard N.G. models; Drill no. 27 (3.66 mm); 6,001-8,000 feet
	70684133	Burner Orifice	Standard N.G. models; 3.50 mm; 8,001-10,000 feet
	70684116	Burner Orifice	Standard J market models; L.P.; Drill no. 40 (2.49 mm); 0-2,000 feet
	70684113	Burner Orifice	Standard J market models; L.P.; 2.30 mm; 2,001-4,000 feet
	70684112	Burner Orifice	Standard J market models; L.P.; Drill no. 43 (2.26 mm); 4,001-6,000 feet
	70684110	Burner Orifice	Standard J market models; L.P.; Drill no. 44 (2.18 mm); 6,001-8,000 feet
	70684109	Burner Orifice	Standard J market models; L.P.; Drill no. 45 (2.08; 8,001-10,000 feet
	70684136	Burner Orifice	Eco models; N.G.; Drill no. 26 (3.73 mm); 0-2,000 feet
	70684134	Burner Orifice	Eco models; N.G.; Drill no. 28 (3.57 mm); 2,001-4,000 feet
	70684132	Burner Orifice	Eco models; N.G.; Drill no. 29 (3.45 mm); 4,001-6,000 feet
	70684130	Burner Orifice	Eco models; N.G.; 3.30 mm; 6,001-8,000 feet
	70684128	Burner Orifice	Eco models; N.G.; Drill no. 1/8 (3.18 mm); 8,001-10,000 feet
	70684116	Burner Orifice	All other models; L.P.; Drill no. 40 (2.49 mm); 0-2,000 feet
	70684114	Burner Orifice	All other models; L.P.; Drill no. 42 (2.37 mm); 2,001-4,000 feet
	70684113	Burner Orifice	All other models; L.P.; 2.30 mm; 4,001-6,000 feet
	70684111	Burner Orifice	All other models; L.P.; 2.20 mm; 6,001-8,000 feet
	70684109	Burner Orifice	All other models; L.P.; Drill no. 45 (2.08 mm); 8,001-10,000 feet

© Copyright, Alliance Laundry Systems LLC – DO NOT COPY or TRANSMIT

Electric Heater Components

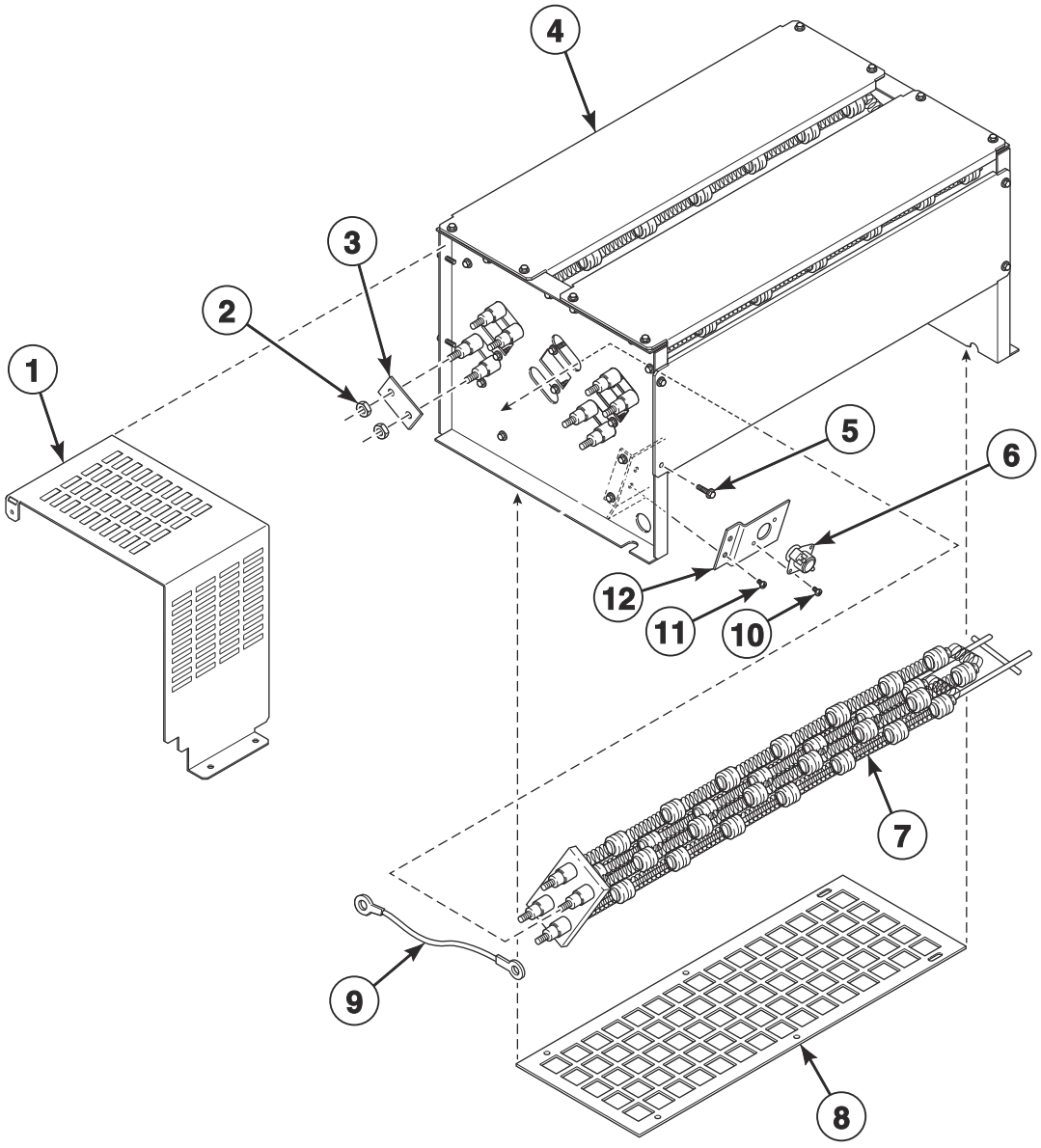

TMB3900P

© Copyright, Alliance Laundry Systems LLC – DO NOT COPY or TRANSMIT

Electric Heater Components

REF	PART NO.	DESCRIPTION	COMMENTS
	44366302	Harness	Contactor to coil/fan/thermostat
	44391004	Conversion Kit	240V/3Ph to 208V/3Ph
1	44364701	Electric Wrap	Eco and medium electric models
	44364702	Electric Wrap	Standard models
2	70054	Nut	
3	M400869	Jumper Strip	3 required for high voltage; 6 required for low voltage
4	44252501	Electric Stove Assembly	Eco and medium electric models
	44242101	Electric Stove Assembly	Standard models
5	70240301	Screw	
6	44328006	Limit Thermostat	
7	44232801	Heater Element	Standard models; 3 required; 12 kW; 208 Volt heater element for 200-208 Volt
	44232802	Heater Element	Standard models; 3 required; 12 kW; 220 Volt heater element for 380 and 440 Volt
	44232803	Heater Element	Standard models; 3 required; 12 kW; 240 Volt heater element for 230-240 Volt and 400-415 and 460-480 Volt
	44258701	Heater Element	Eco models; 3 required; 7 kW; 220 Volt heater element for 380 and 440 Volt
	M412955P	Heater Element	Eco models; 3 required; 7 kW; 240 Volt heater element for 230-240, 400-415 or 460-480 Volt
	44263201P	Heater Element	Eco models; 3 required; 7 kW; 208 Volt heater element for 200-208 Volt
	M410939P	Heater Element	Medium electric models; 3 required; 10 kW; 240 Volt heater element for 230-240 Volt, 400-415 and 460-480 Volt
	M410940P	Heater Element	Medium electric models; 3 required; 10 kW; 208 Volt heater element for 200-208 Volt
	M410941P	Heater Element	Medium electric models; 3 required; 10 kW; 220 Volt heater element for 380 and 440 Volt
8	44308801	Heating Element Screen	Eco and medium electric models
	44308802	Heating Element Screen	Standard models
9	70639808	Jumper Harness	3 inch; 380-415 Volt
	70639809	Jumper Harness	9 inch; 440-480 Volt
10	33562	Screw	
11	430497	Screw	
12	44226101	Limit Offset Bracket	

© Copyright, Alliance Laundry Systems LLC – DO NOT COPY or TRANSMIT

Steam Heater and Valve

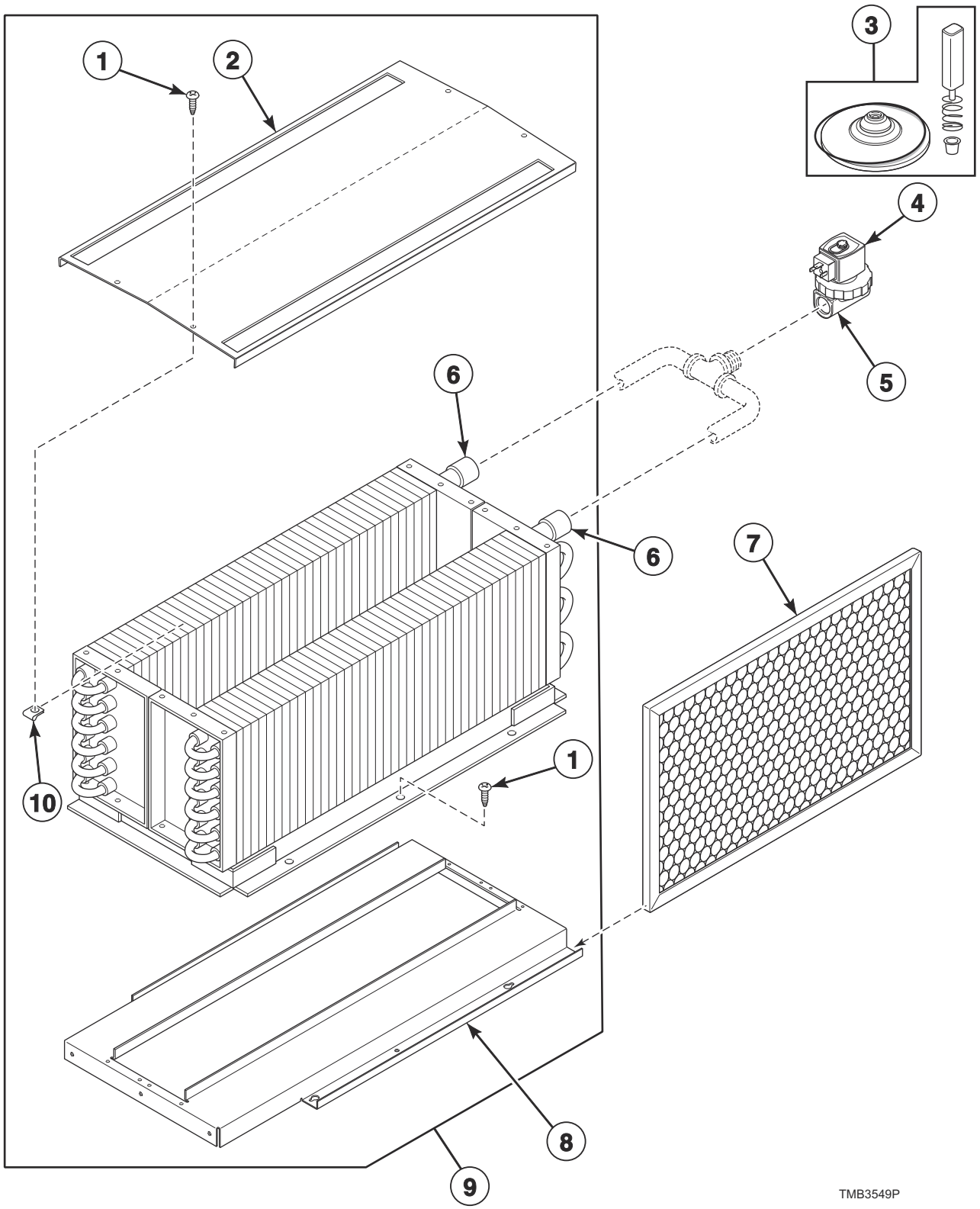

© Copyright, Alliance Laundry Systems LLC – DO NOT COPY or TRANSMIT

Steam Heater and Valve

REF	PART NO.	DESCRIPTION	COMMENTS
	44366303	Stove Limit Bypass Harness	
	F8520703	Steam Valve Harness	
	44314701	Steam Adapter Kit	IEC models
	44304801	Strain Relief	
	F8382301	DIN Valve Adapter Kit	Use with item 5
1	23008	Screw	4 required
2	M400828	Low Pressure Steam Cover	
3	F8379502	Valve Rebuild Kit	
4	F8514701	Coil	120 Volt
	F8514601P	Coil	240 Volt
5	F8322904P	Steam Valve	120 Volt
	F8322906P	Valve	240 Volt
6	44256301	Steam Coil	2 required; CRN models
	M400637P	Steam Coil	2 required; All other models
7	44172001	Filter	Aluminum; 2 required; IEC models
	44104201	Air Filter	Fiberglass; 2 required; T and G market models
8	44007501	Steam Stand Box	
9	44020402	Steam Heater Assembly	CRN models
	44020401P	Steam Heater Assembly	All other models
10	36020	Nut	4 required

© Copyright, Alliance Laundry Systems LLC – DO NOT COPY or TRANSMIT

Control Tray

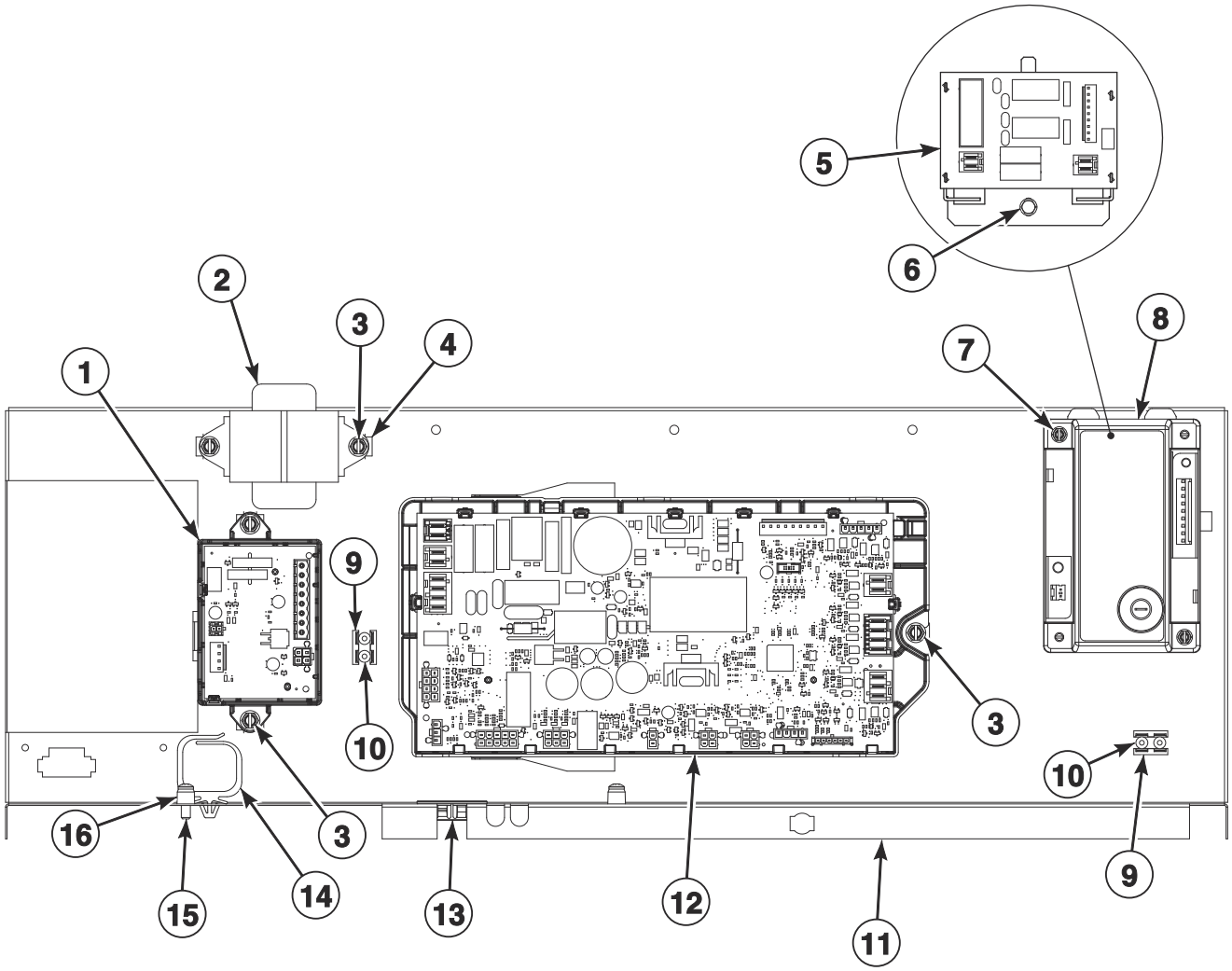

TMB3902P

© Copyright, Alliance Laundry Systems LLC – DO NOT COPY or TRANSMIT

Control Tray

REF	PART NO.	DESCRIPTION	COMMENTS
	44362701	Rear Main Harness	Models with 0 or A in the 16th position
	44395901	Rear Main Harness	ProCapture models with C in the 16th position
	44374901	Heat Control Harness	Gas and steam models
	44378001	Steam Control Harness	Steam models
	70631703	Primary Transformer Vend Harness	120 Volt; Card and central pay
	70631704	Primary Transformer Vend Harness	240 Volt; Card and central pay
	70631705	Central Pay Board Power Supply Harness	24V
	44377401	CARE Harness Bracket	Mounts to item 11
	70696803	Conversion Kit	X to B voltage; Models with D, F, N or W in the 7th position
	70696807	Conversion Kit	X to B voltage; Models with V in the 7th position
1	204779	Central Pay Control Assembly	
2	202757P	Transformer	100-200 Volt; Card and central pay
	202758P	Transformer	200-480 Volt; Card and central pay
3	F8206901	Screw	
4	70030501	Expansion Clip	
5	70501801	Steam Control Assembly	Steam models
6	51780	Screw	
7	51783	Screw	
8	70482002P	Ignition Control	IEC gas models
	70482001	Ignition Control	T and G market gas models
9	00622SG	Terminal	Gas and steam models 2 required; Electric models 1 required
10	M400003	Pop Rivet	
11	44364101	Control Tray	
12	70671701P	I/O Control Assembly	Models with 0 or A in the 16th position
	70712701	I/O Control Assembly	ProCapture models with C in the 16th position
13	70346501	Bushing	
14	F8449501	Wire Clip	
15	39733	Screw	
16	56079	Panel Locator	

© Copyright, Alliance Laundry Systems LLC – DO NOT COPY or TRANSMIT

Accessory Box - Electric 200-240 Volt Models

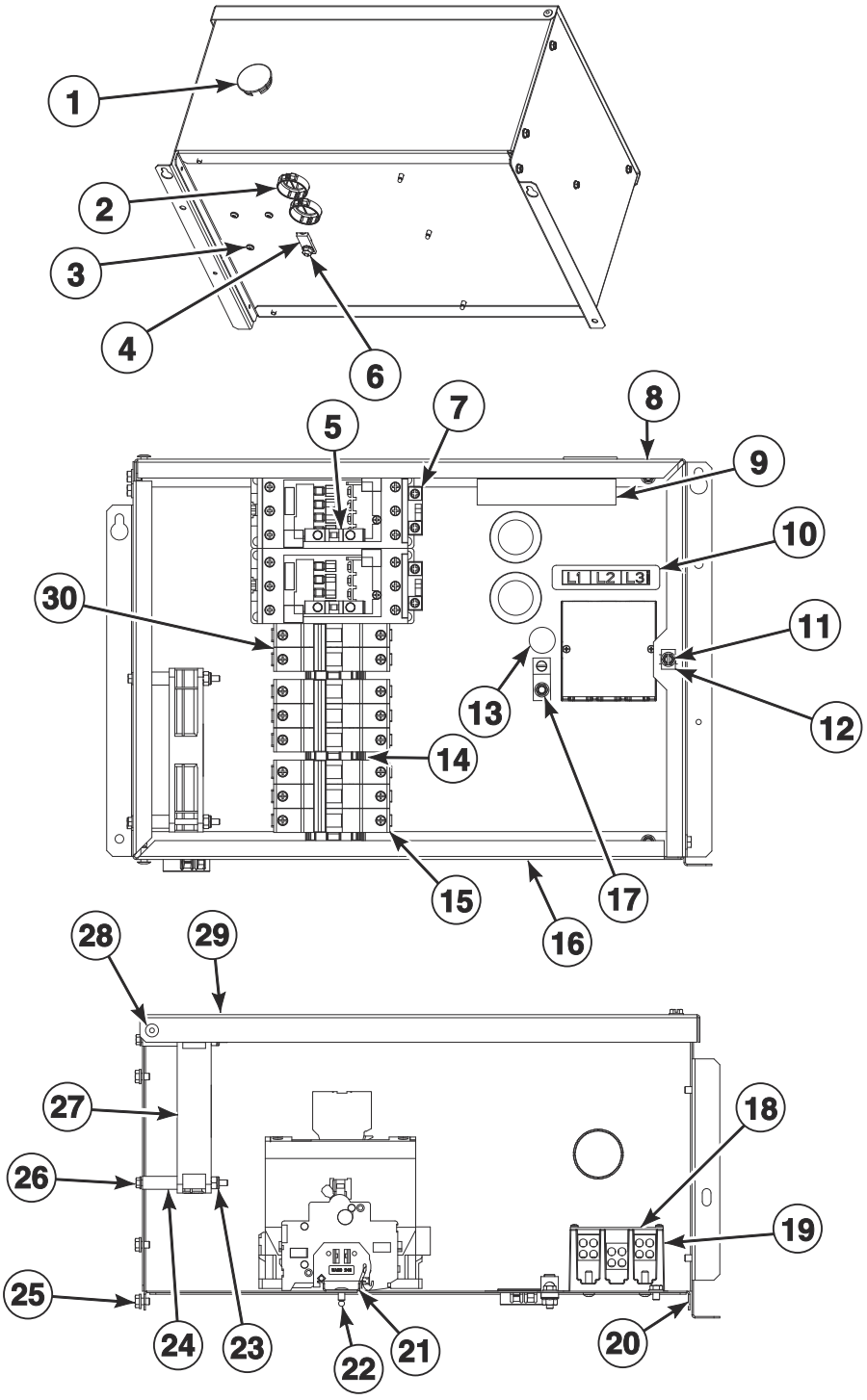

TMB3903P

© Copyright, Alliance Laundry Systems LLC – DO NOT COPY or TRANSMIT

Accessory Box - Electric 200-240 Volt Models

REF	PART NO.	DESCRIPTION	COMMENTS
	44375409	Harness	Contactor box to power distribution block/EMI filter; 1 phase
	44375410	Harness	Contactor box to power distribution block/EMI filter; 3 phase
	70639803	Harness	Power distribution block to contactor block
	70639804	Harness	Power distribution block to contactor block
	70639805	Harness	Contactor block to HC
	70632202	Harness	Contactor coil
	70630903	Harness	Contactor monitor
	70630904	Harness	IEC models; Contactor monitor
	70639812	Harness	Contactor to Element H1-H3
	70639813	Harness	Contactor to Element H4-H6
1	70180001	Plug	
2	M402542	Snap Bushing	3 required
3	39733	Screw	
4	M411283	Ground Lug Connector	
5	44313201	Auxiliary Contact Block	2 required
6	44088001	Nut	
7	70482801	Contactor	2 required
8	44365001	Contactor Box Top	
9	F8614501	Danger Label	
10	44286802	Wire Label	1 Phase; L1, L2 L1, N
	44286803	Label	3 Phase; L1, L2, L3
11	F8206901	Screw	
12	70030501	Expansion Clip	
13	D516100	Label	
14	F8449801	End Stop	3 required
15	70488105	Circuit Breaker	2 required; 63 amp
16	44364901	Contactor Box Bottom	
17	685837	Screw	
18	44014901P	Power Distribution Block Cover	
19	M413865	Power Distribution Block	
20	44365101	Contactor Box Base	
21	44229701	Din Rail	
22	70058501	Pop Rivet	
23	F430232	Nut	
24	44328601	Sleeve	2 required
25	51780	Screw	
26	70546902	Screw	
27	F8504301	Fan	
28	70058502	Pop Rivet	
29	44365301	Contactor Box Cover	
30	70488102	Circuit Breaker	25 amp

© Copyright, Alliance Laundry Systems LLC – DO NOT COPY or TRANSMIT

Accessory Box - Electric 380-480 Volt Models

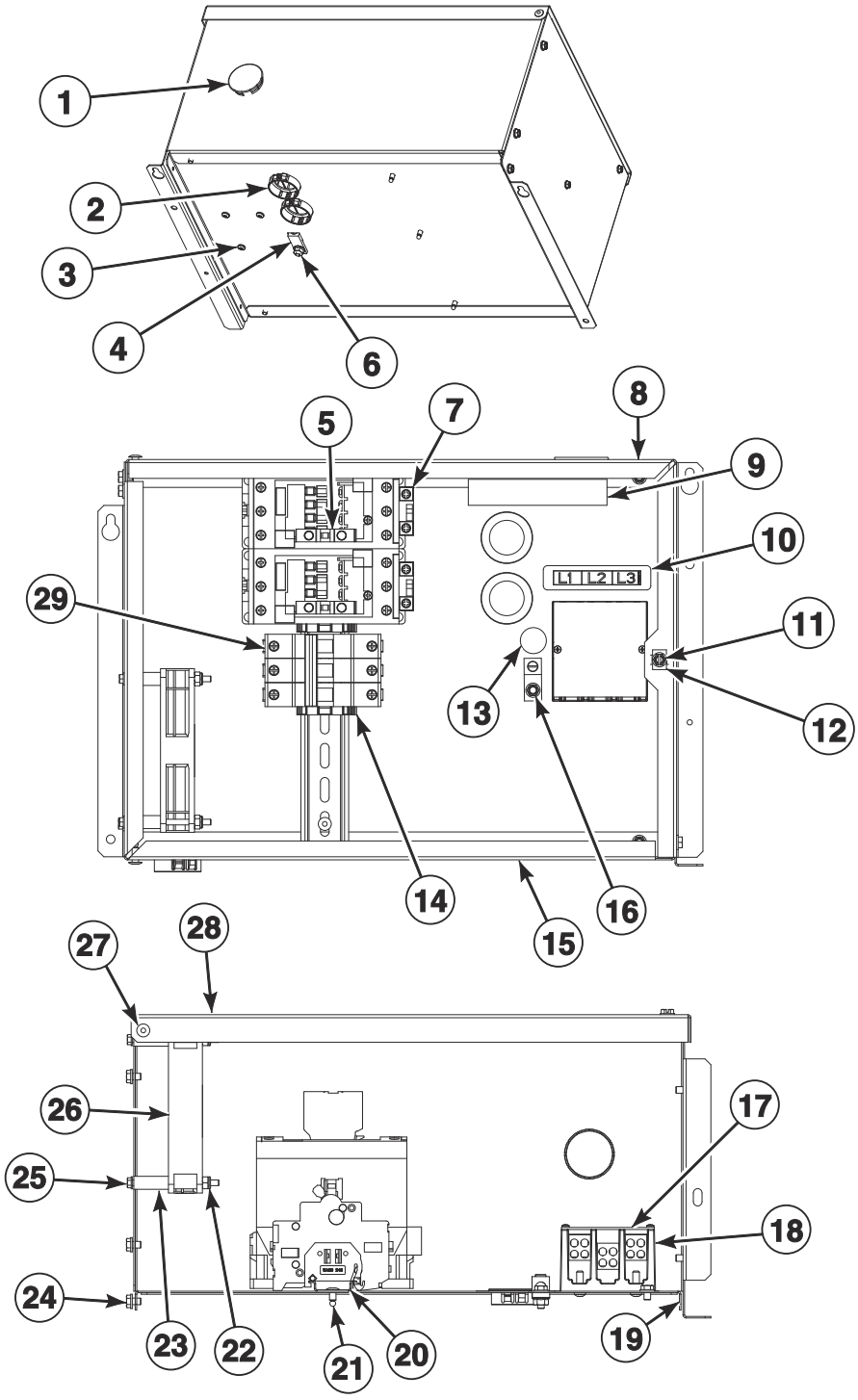

TMB3904P

© Copyright, Alliance Laundry Systems LLC – DO NOT COPY or TRANSMIT

Accessory Box - Electric 380-480 Volt Models

REF	PART NO.	DESCRIPTION	COMMENTS
	44375409	Harness	Contactor box to power distribution block/EMI filter; 1 phase
	44375410	Harness	Contactor box to power distribution block/EMI filter; 3 phase
	70639803	Harness	Power distribution block to contactor block
	70639804	Harness	Power distribution block to contactor block
	70639805	Harness	Contactor block to HC
	70632202	Harness	Contactor coil
	70630903	Harness	Contactor monitor
	70630904	Harness	IEC models; Contactor monitor
	70639812	Harness	Contactor to Element H1-H3
	70639813	Harness	Contactor to Element H4-H6
1	70180001	Plug	
2	M402542	Snap Bushing	3 required
3	39733	Screw	
4	M411283	Ground Lug Connector	
5	44313201	Auxiliary Contact Block	2 required
6	44088001	Nut	
7	70482801	Contactor	2 required
8	44365001	Contactor Box Top	
9	F8614501	Danger Label	
10	44286803	Label	3 Phase; L1, L2, L3
11	F8206901	Screw	
12	70030501	Expansion Clip	
13	D516100	Label	
14	F8449801	End Stop	2 required
15	44364901	Contactor Box Bottom	
16	685837	Screw	
17	44014901P	Power Distribution Block Cover	
18	M413865	Power Distribution Block	
19	44365101	Contactor Box Base	
20	44229701	Din Rail	
21	70058501	Pop Rivet	
22	F430232	Nut	
23	44328601	Sleeve	2 required
24	51780	Screw	
25	70546902	Screw	
26	F8504301	Fan	
27	70058502	Pop Rivet	
28	44365301	Contactor Box Cover	
29	70488101	Circuit Breaker	25 amp

© Copyright, Alliance Laundry Systems LLC – DO NOT COPY or TRANSMIT

Labels

PART NO.	DESCRIPTION	COMMENTS
44324201	Caution Label	Australian models; Repeat Ignition Reset
44318601	Caution Label	Vent/install
F8614501	Danger Label	Shock; English/French
F8614301	Hot Surface Warning Label	English/French
F8609001	Hot Surface Warning Label	Icon
F8611601	Warning Label	
44318600	Label Kit	Vent/install
F8614500	Label Kit	Shock
F8611600	Warning Label Kit	
44321501	Notice Label	120/240 Volt
70539601	Notice Label	
70534201	Notice Label	
F8609501	Notice Label	
D516073	Notice Label	Read instructions; Icon
70538401	Pinch Warning Label	English/French
F8615701	Pinch Warning Label	Icon
70536401	Warning Label	Lint; Australian models
44324101	Warning Label	Fire; Australian models
44321601	Warning Label	Risk of fire; Icon
44324001	Warning Label	Shock/pinch
70741301	ProCapture Label	ProCapture models with C in the 16th position

© Copyright, Alliance Laundry Systems LLC – DO NOT COPY or TRANSMIT

Parts Index

A

Accessory Plate Assembly
F8574202 31
F8574203 31
F8574205 31
F8734601 31

Adapter
44178801 ..... 81, 83, 85

Adapter Harness
44375503 71

Air Exhaust Deflector
44308401 75
44308402 ..... 57, 75

Air Filter
44104201 93

Airflow Switch and Arm Bracket
70319602 79

Airflow Switch Arm
70319401 79

Airflow Switch Assembly
70429602 79

Airflow Switch Vane
70319202 79

App Pay Overlay Kit
44374701 ..... 31, 33

Auxiliary Contact Block
44313201 ..... 97, 99

B

Baffle
44299001P 55
44299801 55
44299802P 55
44393501 55
44393502 55

Ball Bearing
44041901P 69, 73

Bearing
M413923P 69, 73

Blower Assembly
44267201 75
70302201P 75

Blower Housing Scroll
44303801 75
44303901 75
44396301 57

Blower Inlet Cone
44305201 ..... 57, 75
70303101 75

Blower Motor Mounting Plate
44311301 75
44380401 75

Bolt
M400650 ..... 69, 73

Bottom Pan
44298701 55
44394201 57

Burner Assembly
M410541P 81

Burner Cover
44353901 ..... 83, 85

Burner Grate
44354401 ..... 83, 85

Burner Orifice
70684101 87
70684102 87
70684103 87
70684104 87
70684105 87
70684106 87
70684107 87
70684108 87
70684109 ..... 87, 89
70684110 ..... 87, 89
70684111 89
70684112 ..... 87, 89
70684113 89
70684114 ..... 87, 89
70684116 89
70684126 87
70684128 ..... 87, 89
70684130 ..... 87, 89
70684131 87
70684132 ..... 87, 89
70684133 ..... 85, 87, 89
70684134 ..... 87, 89
70684135 ..... 85, 87, 89
70684136 89
70684137 ..... 85, 87, 89
70684138 87
70684139 ..... 85, 87, 89
70684142 ..... 85, 87, 89
70684158 87

Burner Support
44110301 81
44341801 ..... 83, 85

Bushing
70346501 ..... 77, 95

Bypass Harness
44334103 ..... 23, 31, 43

C

Card Reader Plate
F8574204 31

CARE Harness Bracket
44377401 95

Caution Label
44318601 100
44324201 100

Center Pan
44298601 55
44393301 57

Central Pay Board Power Supply Harness
70631705 95

Central Pay Control Assembly
204779 95

Circuit Breaker
70488101 99

N/A items do not appear in index.

© Copyright, Alliance Laundry Systems LLC – DO NOT COPY or TRANSMIT

70488102 97
70488105 97
Circuit Plug Housing, 1
26302 71
Clip
70226701 57
Coil
F8514601P 93
F8514701 93
Coin Box
F160673P 55
Coin Chute Assembly
70296401 55
Coin Drop
38963P 35
70441601 35
70441603 35
Coin Drop Assembly
201141 35
210195 35
210196 35
38462P 35
38463 35
38467 35
38519 35
70281102 35
70283102 35
70441602 35
70471601 35
70482401 35
70506901 35
Coin Drop Kit
CK077 35
CK097 35
CK111 35
CK122 37
Coin Identification Paper
38464P 35
38475 35
38725 35
Coin Meter
F0160737-00 35
Coin Vault and Emergency Stop Mount Assembly
70529502 55
Coin Vault Assembly
70529501 55
Coin Vault Switch Harness
44334101 43
44334104 ..... 23, 31
Cold Weather Kit
44340301 19
Conduit Plate
70615501 59
70615502 59
Contact Base
F8538101 41
Contact Switch
F8069501 41
Contactor
70482801 ..... 97, 99
Contactor Box Base
44365101 ..... 97, 99
Contactor Box Bottom
44364901 ..... 97, 99
Contactor Box Cover
44365301 ..... 97, 99
Contactor Box Top
44365001 ..... 97, 99
Control
70511601 19
Control Assembly
70478803P 23
70478804P 27
70478903P 23
70478904P 27
70479801 21
70479901 21
70523003P 23
70523004P 27
70523101 21
70543104 29
70697001P 31
70697003 33
70697004 33
Control Box Assembly
44180101 17
Control Box Base
44065301 19
Control Box Cover
44065201 19
Control Box Housing
44306701 19
Control Box Top
44307101 19
Control Box Wrap
44119101 17
44344101 17
Control Door and Studs Assembly
70570201 29
Control Door Latch
431318 53
Control Harness
44375604 19
Control Housing Cover
70307005 ..... 17, 39
Control Mounting Bracket
70598601 31
Control Panel
44000125 45
44000130DG 45
44000130W 45
44040013 45
44040015LG 45
44040015W 45
44344001 45
44344002 45
44388603 45
44388606W 45
44388701 45
44388702 45
44388703W 45
44388704W 45
70693201LG 45
70693201W 45
70693202 45
Control Plate
70497101 ..... 21, 27
Control Plate and Studs Assembly
70496601 23

N/A items do not appear in index.

© Copyright, Alliance Laundry Systems LLC – DO NOT COPY or TRANSMIT

Control Plate Assembly
70497201 23
Control Screen Replacement Kit
F8647701P 31, 33
572506P 33
Control Tray
44364101 95
Control Tray Guard
44363801 59
Control Trim
44016401 43
70529401 43
Conversion Kit
44391004 91
70696803 95
70696807 95
Cyclone
44394401 57
Cyclone Lint Front Panel
44394001 57
Cylinder and Trunnion Assembly
44195701P 67
44195702P 67
44195705P 67
44195706 67
Cylinder Assembly
44198301P 67
44198302 67
Cylinder Kit
44057201P 67
44057301P 67
Cylinder Rib
M403003 67
44076301 67
Cylinder Rib Assembly
44191202 67

D

Damper Assembly
44280301 75
44280302 ..... 57, 75
Danger Label
F8614501 ..... 97, 99, 100
Din Rail
44229701 ..... 97, 99
DIN Valve Adapter Kit
F8382301 93
Door Assembly
44354701 61
44354702P 61
44354703 61
44354704 61
44354705 61
44354706 61
44354707 61
44354708 61
44354709 61
44354710LG 61
44354712 61
44389101 61
44389102 61
44389103 61
44389104 61
Door Catch Kit
70482901 43
Door Glass
44008401P 63
44008405 63
Door Glass Installation Tool
M4221P4 63
Door Glass Label
70650401 63
70707701 63
Door Glass Seal Kit
70211906P 63
Door Handle
44007901 63
44263801 63
44370601 63
Door Handle Wedge
D510129W 57
Door Hinge Assembly
70596603 65
70596604 65
70596608 65
70596614B 65
70596614LG 65
70596614W 65
Door Hinge Lug Assembly
70597601 65
70597602 65
70597603 65
Door Latch
M401223 43
Door Pull and Wedge Kit
D511213P 57
Door Ring Assembly
44354801 63
44354802 63
44354803 63
44354804 63
44354807B 63
44354808LG 63
70689103 63
70689104 63
Door Ring Gasket
44008201P 63
70296802 63
Door Seal Kit
70211902P 63
Door Switch Actuator
70727901 65
Door Switch Acutator
70532105 65
Door Switch Harness
44366201 43
Drive Access Cover
70202501 59
Drive Motor
44355005P 73
44355006P 73
Drive Rivet
M400713 19

N/A items do not appear in index.

© Copyright, Alliance Laundry Systems LLC – DO NOT COPY or TRANSMIT

E

Edge Protector
44394701 57
44396201 57

Electric Stove Assembly
44242101 91
44252501 91

Electric Wrap
44364701 91
44364702 91

Electronic Coin Drop Assembly
70294107 35
70513303 35
70513304 35
70513306 35
70513309 35
70513310 35
70513311 35
70513312 35
70513313 35
70513314 35
70513315 35
70513316 35
70513318 35

Electronic Coin Drop Kit
CK099 37
CK100 37
CK101 37
CK109 37
CK110 37
CK113 37
CK115 37
CK116 37
CK117 37
CK118 37
CK119 37
CK120 37
CK121 37
CK125 37

Emergency Stop Button Kit
70580301 41

Emergency Stop Bypass Harness
F8519403 ..... 23, 31

Emergency Stop Harness
44272401 41

Emergency Stop Interconnect Harness
70631102 41

Emergency Stop Label
44012901 41
44012903 41

Emergency Stop Mounting Bracket
70550401 41

Emergency Stop Pushbutton
F200233500 41

EMI Filter
F8591601 77
F8637501 77

End Stop
F8449801 ..... 97, 99

Exhaust Pipe Assembly
44327901 75

Expansion Clip
70030501 ..... 23, 31, 33, 43, 77, 95, 97, 99

Extension Spring
F8440701 73

F

Fan
F8504301 ..... 97, 99

Fan Motor
44354901P 75
44354902P 75
44354903P 75
44354904P 75
44402301P 75

Fan Spacer
70599301 75

Felt Pad
M402144 67

Fill Hose
202799 19
202800 19

Filter
44172001 93

Filter Mounting Plate
70551701 19

Fob Communication Harness
F8519403 31
F8719301 23

Fob Reader Control Assembly
205135 ..... 23, 31

Front Duct Panel
44393401 57

Front Panel
44052532 47
44052533DG 47
44052533W 47
44052535 47
44052536DG 47
44052536W 47
44052538 47
44052539DG 47
44052539LG 47
44052539W 47
44052541 47
44052542DG 47
44052542LG 47
44052542W 47
44346305 47
44346306 47
44346307 47
44346308 47

Fuse Control Assembly
70683201 77

G

Gas Burner
70396201P 83, 85

Gas Heater Assembly
44352701 83
44396501 85

Gas Stove Assembly
44135605 81

N/A items do not appear in index.

© Copyright, Alliance Laundry Systems LLC – DO NOT COPY or TRANSMIT

Gas Valve
44154501P 81, 83, 85
44154502P 81, 83
44154505 ..... 81, 83
44154506 ..... 81, 83
44178301P 81, 83, 85
44178302P 81, 83
44298501 ..... 81, 83
44298504 ..... 81, 83
Gas Valve Bracket
44175703 81
44340701 ..... 83, 85
Gas Valve Harness
44273501 ..... 81, 83, 85
44273502 ..... 81, 83, 85
Gas Valve/Thermostat Harness
44366301 ..... 81, 83, 85
Gasket
44394501 57
44394601 57
70289101P 49
Ground Lug Connector
M411283 ..... 77, 97, 99
Guard
44363601 59
44377301 59

H

Handle and Caps Assembly
70154405P 49
70154415 49
Handle Bumper
70407210 49
Harness
F8617901 ..... 29, 33
44366302 91
44375401 77
44375402 77
44375409 ..... 97, 99
44375410 ..... 97, 99
44388501 77
70630903 ..... 97, 99
70630904 ..... 97, 99
70632202 ..... 97, 99
70639803 ..... 97, 99
70639804 ..... 97, 99
70639805 ..... 97, 99
70639812 ..... 97, 99
70639813 ..... 97, 99
Harness Adapter Plate
70523301 19
Harness Strap
55881 71
Heat Control Harness
44374901 95
Heater Element
M410939P 91
M410940P 91
M410941P 91
M412955P 91
44232801 91
44232802 91
44232803 91
44258701 91
44263201P 91
Heating Element Screen
44308801 91
44308802 91
High Altitude Orifice Kit
44357503 ..... 85, 87, 89
44357504 ..... 87, 89
44357505 87
44357506 87
High Voltage Suppression Cable
44239704 ..... 83, 85
44239705 81
Hinge Cam Kit
M4772P3 65
M4773P3 65
70622401 65
Hold-Down Clip
35865 51
Hose
44073304 19
Hose Clamp
36801 19
Hose Fitting
44069101 19
Hot Surface Warning Label
F8609001 100
F8614301 100
Housing and Trunnion Assembly
M4644P3 69
44336302 69

I

Idler Shaft
44303102 73
Idler Spacer
44306801 73
Igniter Cover
70159601 ..... 81, 83, 85
Ignition Control
70482001 95
70482002P 95
Inner Support Panel
44393701 57
44393702 57
Insulation
44150102 53
44150105 53
Insulator
M413862 77
Intake Panel
44393901 57
Interconnect Harness
44375601 19
Interface Harness
44378104 ..... 23, 31
Inverter Control Assembly
70603002P 77
70603201P 77
70603403P 77
70603601P 77
70736502 77

N/A items do not appear in index.

© Copyright, Alliance Laundry Systems LLC – DO NOT COPY or TRANSMIT

Inverter Control Power Harness
44375701 77
44375703 77
44375704 77
44375706 77
44375709 77
44375710 77
Inverter Drive Tray
44364201 77
Inverter Power Conversion Harness
70671001 77
Inverter to Motor Harness
70635405 73
70635406 73
70635407 73
70635408 73
IR Sensor
44399602 57
I/O Control Assembly
70671701P 95
70712701 95

J

Jumper Harness
D511476 43
70639808 91
70639809 91
Jumper Strip
M400869 91

K

Key
M400008 ..... 67, 73
44309301 73
70155601 ..... 19, 43
70155602 43
Kickplate
70117607 49
70117619 49

L

Label
D503887 ..... 81, 83, 85
D516100 ..... 77, 97, 99
44190901 47
44286801 77
44286803 ..... 77, 97, 99
44318201 19
562738 45
70472801 47
70537001 47
Label Kit
F8614500 100
44318200 19
44318600 100
44324500 19
70534400 47
Latch Mounting Bracket
44003201 53
Lead-In Pipe
44377001 81
44377101 81
Lead-In Pipe Kit
44377001 ..... 83, 85
44377101 ..... 83, 85
Leveling Leg Locknut Wrench
205655 55
Light
801432 19
Limit Offset Bracket
44226101 91
Limit Thermostat
44328001 85
44328003 75
44328005 83
44328006 91
44328008 81
70530905 75
Lint Bracket
44325301 51
Lint Clip Bracket
44140202 51
Lint Cover Panel
44395801 57
Lint Door Switch Harness
44362702 49
Lint Panel
44293602 49
44293603LG 49
44293603W 49
44293604DG 49
44293604W 49
44293605 49
44298101 51
44298102 51
44298201 51
44300901 51
Lint Screen
44063601 51
Lint Screen Clip
H96418413 51
Lint Screen Top Rail
44298901 51
Lint Sensor Bracket
70723001 57
Lint Sensor Harness
44399603 57
Lock, Key and Nut Kit
70722301 43
70733701 ..... 19, 43
Low Pressure Steam Cover
M400828 93
Lower Guard
44363501 59
44363901 59
44363902 59
44395101 59
Lower Rear Panel
44380501 53
L.P. Conversion Kit
44328802 81
44328803 81
44328811 81
44328812 83

N/A items do not appear in index.

© Copyright, Alliance Laundry Systems LLC – DO NOT COPY or TRANSMIT

44330302 81
44330307 83
44355202 83

M

Machine ID Control Assembly
203361P 23, 27, 29, 31, 33
Magnet
F8406201 57
70343101 49
Magnet Bracket
44290501 49
Main Harness
44363301 17
70707901 ..... 23, 31, 33
Max Fill Line Label
70707501 63
Micro V Pulley
44374001 73
Mixing Valve
70519801 19
Mixing Valve Shield Bracket
44306601 19
Moisture Sensing Harness Kit
44344702 71
Moisture Sensor Harness
44375501 71
Motor Pivot Bracket Weldment
44327001 73
Motor Pivot Plate Weldment
44311501 73
Motor Pivot Support Bracket
44325801 73
Mounting Bracket
44376601 19
Mounting Plate
70208801 23

N

Nameplate
F8443106 45
F8688001 45
F8688901 45
567293 45
567887 45
70686501 45
70686601 45
Notice Label
D516073 100
F8609501 100
44321501 100
70534201 100
70539501 ..... 81, 83, 85
70539601 100
Notice label
70544901 ..... 81, 83
Nut
F430232 ..... 57, 97, 99
M400026 ..... 69, 73
M400033 ..... 71, 73
M400977 43
M404993 67
M414215 63
21899 55
23951 49
36020 93
44071201 29
44087101 ..... 31, 33
44088001 ..... 63, 65, 97, 99
44333202 73
51236 49
70030401 ..... 43, 53, 65
70054 ..... 23, 31, 91
70688901 75

O

Opto Coupler
200674P 35
Orifice Adapter
44340802 ..... 83, 85
Orifice Adapter Support
44342101 ..... 83, 85
Outlet Deflector
44395701 57
Overlay
F8205101 23
F8733901 23
F8734001 31
F8734201 23
F8734301 31
F8736501 23
F8736601 31
70295101 23
70518101 23
70518102 23
70519001 21
70519002 21
70539101 21
70539102 21
70541201 25
70541202 25
70541203 25
70545501 21
70545502 21
70548801 27
70548802 27
70556201 23
70556301 23
70556401 23
70556402 23
70556501 23
70556502 23
70556601 23
70556701 23
70556801 23
70556901 23
70557001 23
70557002 23
70571101 25
70571102 25
70571103 25
70571104 25
70571401 27
70571402 27
70571601 27
70571602 27

N/A items do not appear in index.

© Copyright, Alliance Laundry Systems LLC – DO NOT COPY or TRANSMIT

70595401 29
70673301 27
70673302 27
70675001 21
70675002 21
70681701 25
70681702 25
70681703 25
70681704 25
70681705 25
70690401 25
70690402 25
70690403 25
70690404 25
70690405 25
70690701 25
70690702 25
70690703 25
70691001 27
70691002 27
70691301 21
70691302 21
70705701 25
70714101 25
70714102 25
70714103 25
70714104 25
70714105 25
70714401 25
70714402 25
70714403 25
70714801 27
70714802 27
70715101 27
70715102 27
70715501 27
70715502 27
70722401 25
70722402 25
70722403 25
70722404 25
70722405 25

P

Panel Locator
56079 ..... 43, 49, 95
Pin
70071401 65
Pinch Warning Label
F8615701 100
70538401 100
Pipe Bracket
44327601 59
44327603 59
Pipe Plug
70346802 81
Plug
70167601 ..... 81, 83, 85
70180001 ..... 19, 97, 99
Pop Rivet
M400003 ..... 53, 77, 95
44166601 43
70058501 ..... 49, 55, 65, 97, 99
70058502 ..... 97, 99
70126301 49
70126401 49
Porcelain Touch-Up Paint
122P4P 53, 55
Power Distribution Block
M413865 ..... 97, 99
Power Distribution Block Cover
44014901P 97, 99
Power Harness
44388401 77
Power Sensor Harness
44375602 19
44375603 19
Pressure Fitting
44231601 ..... 81, 83, 85
Primary Transformer Vend Harness
70631703 95
70631704 95
Probe Thermistor
44394801 85
ProCapture Label
70741301 100
Pulley
44289502 73
Pushbutton Switch
70413301 ..... 21, 23, 27, 31, 33, 43
Push-to-Start Switch
801434W 19

R

Rear Access Plate
44135201 81
Rear Duct Panel
44393601 57
Rear Guard
44373401 59
44373501 59
44376701 19
Rear Main Harness
44362701 95
44395901 95
Rear Mount Panel
44393801 57
Reed Switch Assembly
F8066804 49
Rib Rod
M404992 67
RIb Wire
44208601 71
Rivet
70743501 49
Roller Bracket Assembly
70404001 49
Roller Catch Arm
70030301 49
Roller Catch Spacer
70030201 49
Roller Catch Wheel
70297601 49

N/A items do not appear in index.

© Copyright, Alliance Laundry Systems LLC – DO NOT COPY or TRANSMIT

S

Screw
F8206901 ..... 39, 59, 77, 95, 97, 99
M400063 69
M400661 63
M402797 81
M411072 ..... 23, 43
23008 93
33562 91
39733 ..... 31, 33, 49, 95, 97, 99
430497 ..... 17, 19, 55, 59, 79, 83, 85, 91
430757 ..... 49, 79
431287 53
44338901 71
44349101 65
44364601 75
44364602 73
51780 ..... 19, 29, 33, 55, 95, 97, 99
51782 81
51783 ..... 77, 95
685837 ..... 77, 97, 99
70033502 ..... 43, 65
70072801 49
70132301 49
70182601 43
70187201 ..... 69, 73
70240301 ..... 81, 91
70247701 55
70275801 43
70407301 65
70436301 65
70442101 ..... 63, 71
70546902 ..... 97, 99
70576101 65
70607603 65
804608 ..... 19, 21, 23, 27, 29
805213 73

Sensor Harness
44375606 19

Serial Pay Harness
F8713906 31

Shaft Collar
70467001 73

Shaft Wire
44208702 71

Shield
44326801 19

Shock Warning Label
F8614201 19
F8614401 19

Side Panel
44367702DG 55
44367702LGP 55
44367702WP 55
44367802DGP 55
44367802LGP 55
44367802WP 55

Sleeve
44328601 ..... 97, 99

Slip Ring Assembly
44222702 71

Slip Ring Holder
44224401 71

Slot Card Plate Assembly
44089501 23

Snap Bushing
D503235 17
M402542 ..... 97, 99

Spacer
M401402 67

Spark Electrode
44328701P 81
70548701P 83, 85

Spray Paint
298P4P 53, 55

Spud Holder Weldment
44263104 81

Steam Adaptor Kit
44314701 93

Steam Coil
M400637P 93
44256301 93

Steam Control Assembly
70501801 95

Steam Control Harness
44378001 95

Steam Harness Bracket
44376801 59

Steam Heater Assembly
44020401P 93
44020402 93

Steam Stand Box
44007501 93

Steam Valve
F8322904P 93

Steam Valve Harness
F8520703 93

Stove Grate
44300301 59
44300302 59
44364801 59

Stove Limit Bypass Harness
44366303 93

Strain Relief
44304801 93

Switch
70411901 79

Switch Bracket
44296101 49
70356301 ..... 79, 81

Switch Hole Plug
44057801B 43
44057801LG 43
44057801W 43

T

Terminal
00622SG 77, 95

Terminal Block
430642 77

Terminal Block Shield
70333001 77

Thermistor
M414704 75
44064701 55

Thermistor Plate
44068101 55

N/A items do not appear in index.

© Copyright, Alliance Laundry Systems LLC – DO NOT COPY or TRANSMIT

44068102 55
Thermostat Opening Cover
44312501 75
Thimble Assembly
44305002 75
Top Cover
44368901 53
Top Cover Pan
44129301P 53
Top Guard
44364001 59
44364002 59
Top Pan
44300101 53
44348701 53
44352501 53
44398801 53
Top Panel
44348801 53
44348802 53
44399201 53
Top Panel Bracket
44368201 53
Transformer
F8491101 77
202757P 95
202758P 95
Trunnion and Bearing Assembly
M4640P3 69
44336301 69
Trunnion Assembly
44207901P 67
44208001P 67
44375001P 69, 73
Trunnion Housing
M413826P 73
Tumbler Dolly Kit
M4379P4 43

U

Upper Guard
44374301 59
Upper Rear Panel
44376901 53
44394301 53
USB Bracket
70547001 ..... 29, 33
USB IR Interface Kit
203346 39
USB-Serial Interface Assembly
203440 ..... 29, 31, 33

V

Valve
F8322906P 93
Valve Rebuild Kit
F8379502 93
V-Belt
44309402 73
44333301 73
Vend Activation Harness
44334002 31
44334004 ..... 21, 23, 27
Vend Plate
F8632501 31

W

Warning Label
F8611601 100
44321601 100
44324001 100
44324101 100
44324501 19
44324502 19
70534401 47
70534402 47
70534405 47
70536401 100
808338 59
Warning Label Kit
F8611600 100
Washer
F431131 75
M400015 ..... 67, 69
20103 ..... 69, 73
44238902 71
70261401 ..... 69, 73
Water Valve Harness
44375605 19
Wire Clip
F8449501 95
F8449502 77
Wire Guard
201595P 35
Wire Label
44286802 97
44286804 77
Wireless Control Label
204692 ..... 31, 33, 39
Wireless Network Control Assembly
807211 39
Wireless Network Harness
F8674006 39
Wireless Network Kit
70609701 39
Wireway Channel
44239101 71

N/A items do not appear in index.

© Copyright, Alliance Laundry Systems LLC – DO NOT COPY or TRANSMIT