Washer-Extractor

Refer to Page 5 for Model Numbers

Parts

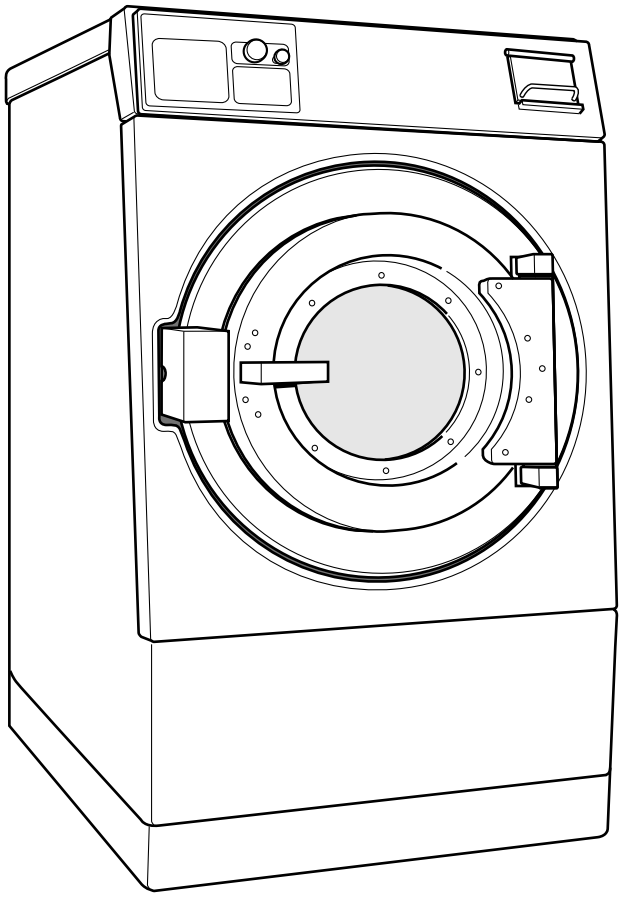

PHM1397C_C002874

Alliance™ Laundry Systems

www.alliancelaundry.com

Part No. C002874R15
September 2024

Table of Contents

Title	Page
Parts Ordering Information	3
Serial Plate Location	3
Model Identification	5
Product Overview - PS40 Control	6
Decals - Models through 8/31/09 (Drawing 1 of 2)	8
Decals - Models through 8/31/09 (Drawing 2 of 2)	10
Decals - Models starting 9/1/09	12
Bearing Housing Assembly (Drawing 1 of 6)	14
Bearing Housing Assembly (Drawing 2 of 6)	16
Bearing Housing Assembly (Drawing 3 of 6)	18
Bearing Housing Assembly (Drawing 4 of 6)	20
Bearing Housing Assembly (Drawing 5 of 6)	22
Bearing Housing Assembly (Drawing 6 of 6)	24
Top and Front Panels (Drawing 1 of 2)	26
Top and Front Panels (Drawing 2 of 2)	28
Rear, Side and Valve Panels (Drawing 1 of 2)	30
Rear, Side and Valve Panels (Drawing 2 of 2)	32
Control Box Assembly	34
Cylinder Assembly	36
Single Cup Dispenser Assembly	38
5 Cup Dispenser Assembly	40
Door Assembly - Models through 2/9/09 (Drawing 1 of 2)	42
Door Assembly - Models through 2/9/09 (Drawing 2 of 2)	44
Door Assembly - Models starting 2/10/09 (Drawing 1 of 2)	46
Door Assembly - Models starting 2/10/09 (Drawing 2 of 2)	48
Door Lock Assembly	50
Door Lock Assembly with Magnetic Sensor	52
5 Cup Hot Plumbing Assembly	54
1 Cup Hot Plumbing Assembly	56
5 Cup Cold Plumbing Assembly	58
1 Cup Cold Plumbing Assembly	60
Auxiliary Plumbing Assembly	62
Supply Hose and Filter (Optional)	64
Steam Heat Assembly	66
Steam Option Assembly	68
Shell Assembly (Drawing 1 of 2)	70
Shell Assembly (Drawing 2 of 2)	72
Electric Heat Shell Assembly (Drawing 1 of 2)	74
Electric Heat Shell Assembly (Drawing 2 of 2)	76
Drive Box Assembly	78
Electric Heat Drive Box Assembly	80

© Copyright 2024, Alliance Laundry Systems LLC

All rights reserved. No part of the contents of this book may be reproduced or transmitted in any form or by any means without the expressed written consent of the publisher.

AC Drive and EMI Filter 82
AC Drive and EMI Filter - Electric Heat Models 84
PowerFlex Drive and EMI Filter - Design 1 Models 86
PowerFlex Drive and EMI Filter - Design 2 Models 88
Main Assembly (Drawing 1 of 8) 90
Main Assembly (Drawing 2 of 8) 92
Main Assembly (Drawing 3 of 8) 94
Main Assembly (Drawing 4 of 8) 96
Main Assembly (Drawing 5 of 8) 98
Main Assembly (Drawing 6 of 8) 100
Main Assembly (Drawing 7 of 8) 102
Main Assembly (Drawing 8 of 8) 104
Parts Index 107

© Copyright, Alliance Laundry Systems LLC – DO NOT COPY or TRANSMIT

Parts Ordering Information

If literature or replacement parts are required, contact the source from whom the machine was purchased or contact Alliance Laundry Systems at (920) 748-3950 for the name and address of the nearest authorized parts distributor.

For technical assistance, call the number listed below:

(920) 748-3121 Ripon, Wisconsin

Serial Plate Location

When calling or writing about your product, be sure to mention model and serial numbers. Model and serial numbers are located on serial plate(s) as shown. The serial plate is located inside the door and on the upper rear panel.

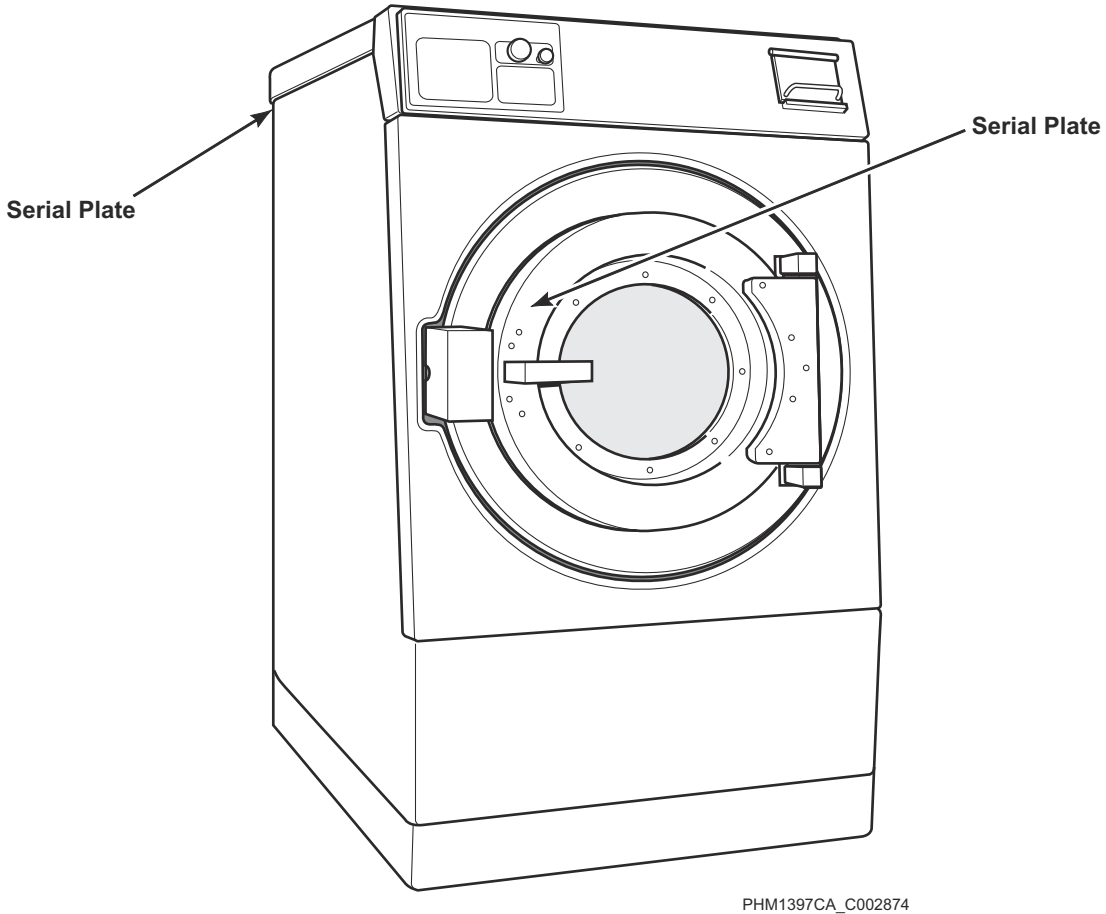

PHM1397CA_C002874

© Copyright, Alliance Laundry Systems LLC – DO NOT COPY or TRANSMIT

Notes

© Copyright, Alliance Laundry Systems LLC – DO NOT COPY or TRANSMIT

Model Identification

Information in this manual is applicable to these washer-extractor models:

CP040PHN1
CP040PHQ1
CP040PHX2
CP040PMN1
CP040PMQ1
CP040PMX2
CP060PHN1
CP060PHN2
CP060PHQ1
CP060PHQ2
CP060PHX1
CP060PHX2
CP060PMN1
CP060PMQ1
CP060PMX2
CPC40H
CPC40M
CPC60H
CPC60M

IP040PHN1
IP040PHN2
IP040PHQ1
IP040PHX2
IP040PMN1
IP040PMQ1
IP040PMX2
IP060PHN1
IP060PHN2
IP060PHQ1
IP060PHQ2
IP060PHX2
IP060PMN1
IP060PMN2
IP060PMQ1
IP060PMX2
IPH40H
IPH40M
IPH60H
IPH60M
IPH180
IPH270

JP040PHN1
JP040PHQ1
JP060PHN1
JP060PHN2
JP060PHQ1
JP060PMQ1

© Copyright, Alliance Laundry Systems LLC – DO NOT COPY or TRANSMIT

Product Overview - PS40 Control

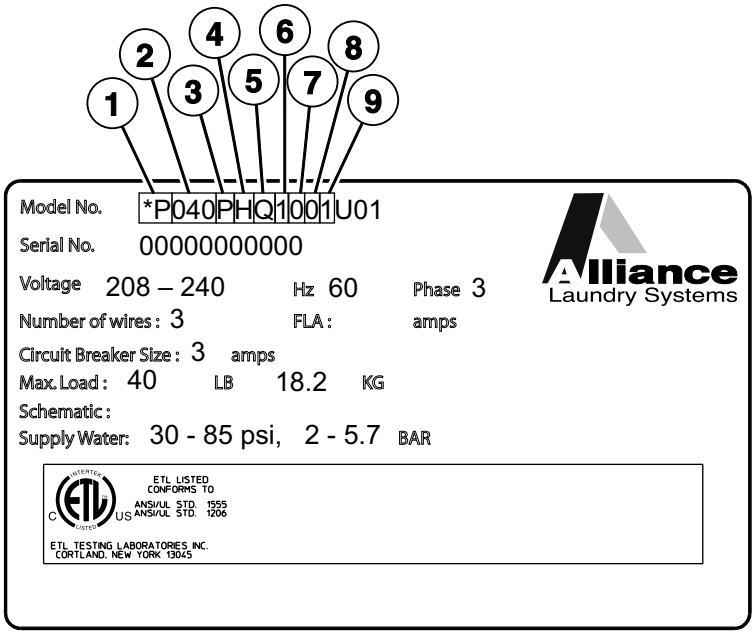

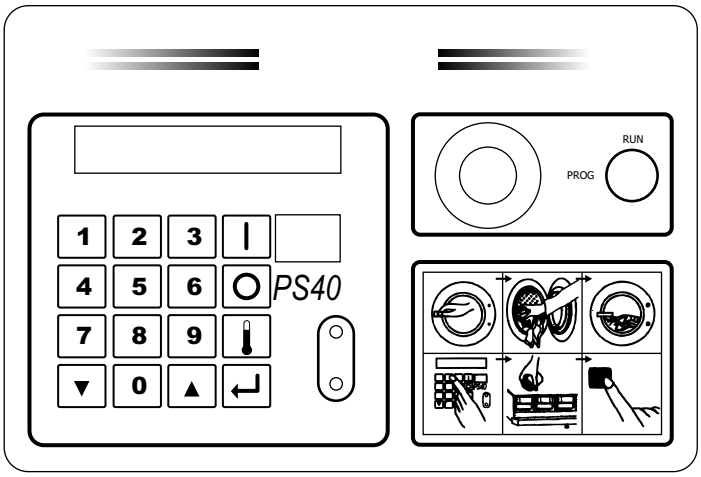

PHM3091P_C002874

© Copyright, Alliance Laundry Systems LLC – DO NOT COPY or TRANSMIT

Product Overview - PS40 Control

REF	PART NO.	DESCRIPTION	COMMENTS
1		Product Family	CP IP JP
2		Capacity (Pounds)	040 060 080 100 125 140 175
3		Control	P (PS-40 Control)
4		Speed	H (High Speed) M (Medium Speed)
5		Voltage	N (380-415/440-480/50/60/3) Q (208-220/220-240/50/60/3) X (208-220/220-240/50/60/1/3)
6		Design	1 2
7		Heat	0 (Prep for Steam) D (Direct) E (Electric)
8		Plumbing	0 (Standard US Thread - 2 valves) A (US Thread - 3 valves) B (Metric Thread - 2 valves) C (Metric Thread - 3 valves) D (US Thread - 2 valves, 3 inlets) E (No valves)
9		Supply	1 (1 Compartment 6 Signals) 2 (1 Compartment 12 Signals) 5 (5 Compartments 6 Signals) 6 (5 Compartments 12 Signals) 7 (No Compartment 6 Signals) 8 (No Compartment 12 Signals)

© Copyright, Alliance Laundry Systems LLC – DO NOT COPY or TRANSMIT

Decals - Models through 8/31/09 (Drawing 1 of 2)

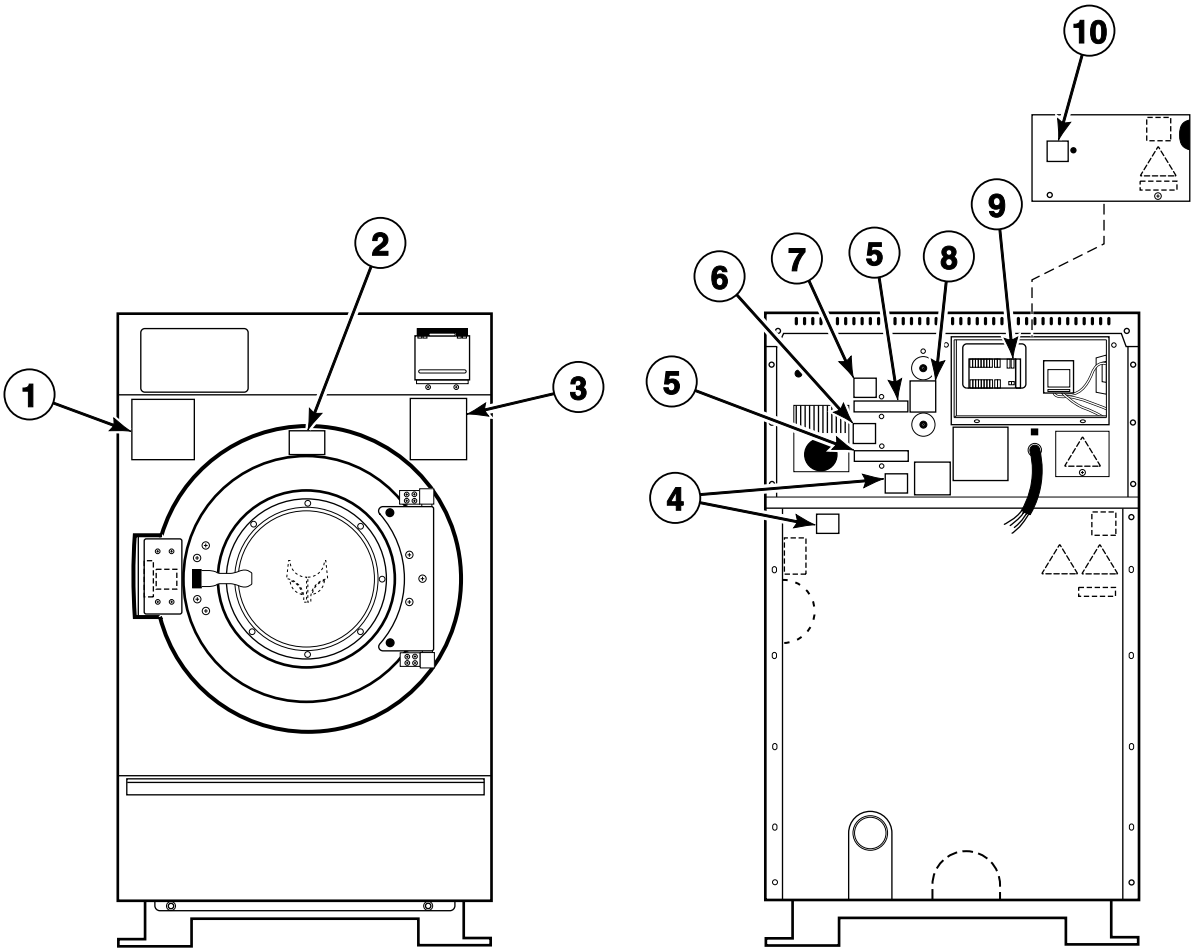

PHM2767P_C002874

© Copyright, Alliance Laundry Systems LLC – DO NOT COPY or TRANSMIT

Decals - Models through 8/31/09 (Drawing 1 of 2)

REF	PART NO.	DESCRIPTION	COMMENTS
1	F200085100	Spin Warning Decal	Models CP040PHN1, CP040PHQ1, CP040PMN1, CP040PMQ1, CP060PHN1, CP060PHQ1, CP060PMN1, CP060PMQ1, IP040PHN1, IP040PHQ1, IP040PMN1, IP040PMQ1, IP060PHN1, IP060PHQ1, IP060PMN1, IP060PMQ1, JP040PHN1, JP040PHQ1, JP060PHN1, JP060PHQ1 and JP060PMQ1
2	F200085000	Hot Surface Warning Decal	Models CP040PHN1, CP040PHQ1, CP040PMN1, CP040PMQ1, CP060PHN1, CP060PHQ1, CP060PMN1, CP060PMQ1, IP040PHN1, IP040PHQ1, IP040PMN1, IP040PMQ1, IP060PHN1, IP060PHQ1, IP060PMN1 and IP060PMQ1
3	F200085300	Hot Water and Chemical Caution Decal	Models CP040PHN1, CP040PHQ1, CP040PMN1, CP040PMQ1, CP060PHN1, CP060PHQ1, CP060PMN1, CP060PMQ1, IP040PHN1, IP040PHQ1, IP040PMN1, IP040PMQ1, IP060PHN1, IP060PHQ1, IP060PMN1, IP060PMQ1, JP040PHN1, JP040PHQ1, JP060PHN1 and JP060PHQ1
4	F200318200	Cover Decal	
5	F230734	Water Line Caution Decal	Models CP040PHN1, CP040PHQ1, CP040PMN1, CP040PMQ1, CP060PHN1, CP060PHQ1, CP060PMN1, CP060PMQ1, IP040PHN1, IP040PHQ1, IP040PMN1, IP040PMQ1, IP060PHN1, IP060PHQ1, IP060PMN1, IP060PMQ1, JP040PHN1, JP040PHQ1, JP060PHN1, JP060PHQ1 and JP060PMQ1
6	F0231367-00	Hot Water Valve Decal	
7	F0231368-00	Cold Water Valve Decal	
8	C000508	Bearing Lubrication Decal	
9	C000506	Supply Signal Decal	
10	F230917-1	External Supply Connection Decal	Models CP040PHN1, CP040PHQ1, CP040PMN1, CP040PMQ1, CP060PHN1, CP060PHQ1, CP060PMN1, CP060PMQ1, IP040PHN1, IP040PHQ1, IP040PMN1, IP040PMQ1, IP060PHN1, IP060PHQ1, IP060PMN1, IP060PMQ1, JP040PHN1, JP040PHQ1, JP060PHN1, JP060PHQ1 and JP060PMQ1

© Copyright, Alliance Laundry Systems LLC – DO NOT COPY or TRANSMIT

Decals - Models through 8/31/09 (Drawing 2 of 2)

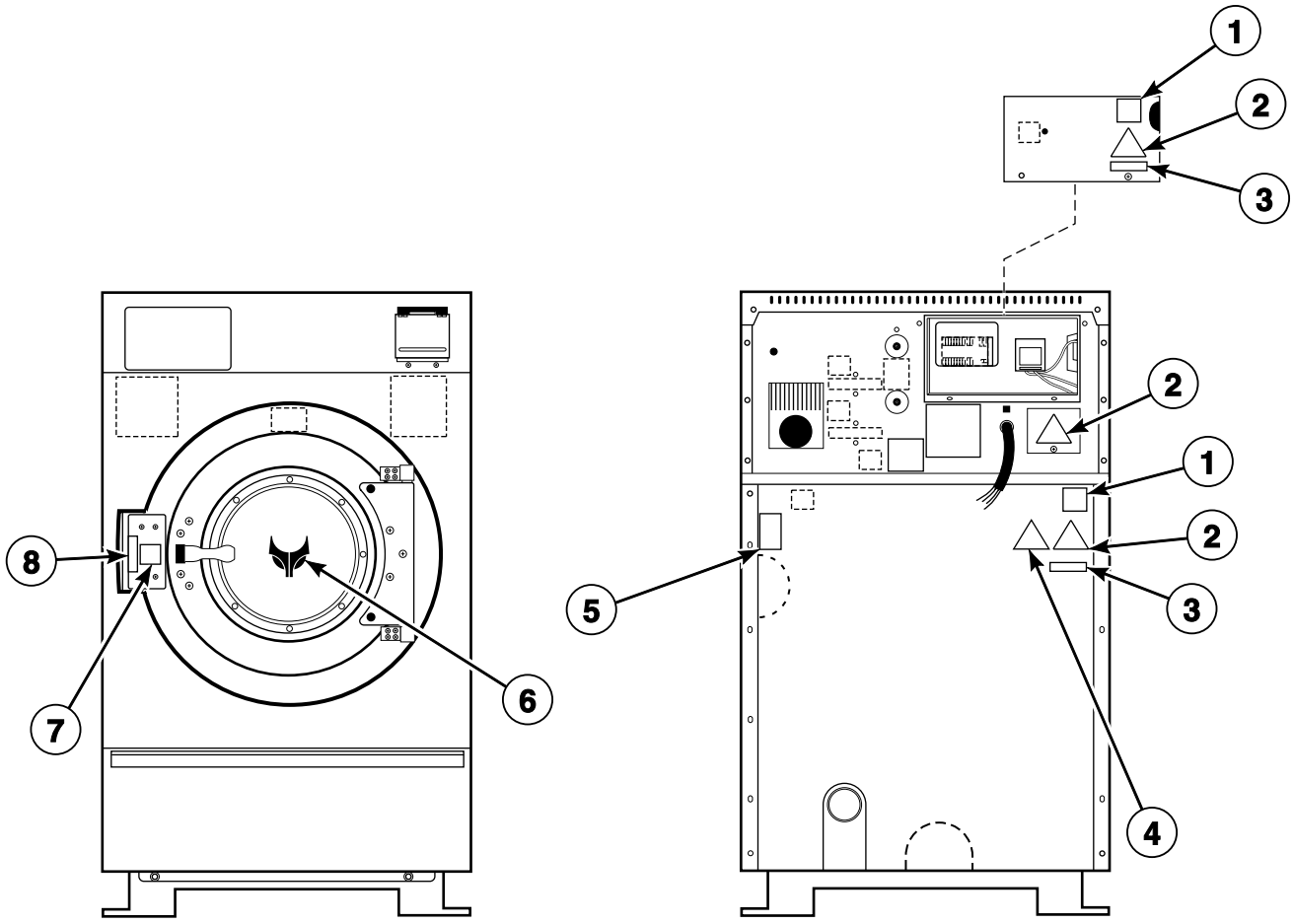

PHM2767PA_C002874

© Copyright, Alliance Laundry Systems LLC – DO NOT COPY or TRANSMIT

Decals - Models through 8/31/09 (Drawing 2 of 2)

REF	PART NO.	DESCRIPTION	COMMENTS
1	F200318200	Cover Decal	Models CP040PHN1, CP040PHQ1, CP040PMN1, CP040PMQ1, CP060PHN1, CP060PHQ1, CP060PMN1, CP060PMQ1, IP040PHN1, IP040PHQ1, IP040PMN1, IP040PMQ1, IP060PHN1, IP060PHQ1, IP060PMN1 and IP060PMQ1
2	D502511	Electrical Shock Label	Models CP040PHN1, CP040PHQ1, CP040PMN1, CP040PMQ1, CP060PHN1, CP060PHQ1, CP060PMN1, CP060PMQ1, IP040PHN1, IP040PHQ1, IP040PMN1, IP040PMQ1, IP060PHN1, IP060PHQ1, IP060PMN1, IP060PMQ1, JP040PHN1, JP040PHQ1, JP060PHN1, JP060PHQ1 and JP060PMQ1
3	D500049	Warning Label	Models CP040PHN1, CP040PHQ1, CP040PMN1, CP040PMQ1, CP060PHN1, CP060PHQ1, CP060PMN1, CP060PMQ1, IP040PHN1, IP040PHQ1, IP040PMN1, IP040PMQ1, IP060PHN1, IP060PHQ1, IP060PMN1, IP060PMQ1, JP040PHN1, JP040PHQ1, JP060PHN1, JP060PHQ1 and JP060PMQ1
4	N/A	Crush Hazard Warning Decal	Models CPC40H, CPC40M, CPC60H, CPC60M, IPH40H, IPH40M, IPH60H, IPH60M, IPH180 and IPH270
	D502506	Pinched Fingers Label	Models CP040PHN1, CP040PHQ1, CP040PMN1, CP040PMQ1, CP060PHN1, CP060PHQ1, CP060PMN1, CP060PMQ1, IP040PHN1, IP040PHQ1, IP040PMN1, IP040PMQ1, IP060PHN1, IP060PHQ1, IP060PMN1, IP060PMQ1, JP040PHN1, JP040PHQ1, JP060PHN1, JP060PHQ1 and JP060PMQ1
5	F200085000	Hot Surface Warning Decal	Models CPC40H, CPC40M, CPC60H, CPC60M, IPH40H, IPH40M, IPH60H, IPH60M, IPH180 and IPH270
	F231380	Hot Surface Warning Decal	Models CP040PHN1, CP040PHQ1, CP040PMN1, CP040PMQ1, CP060PHN1, CP060PHQ1, CP060PMN1, CP060PMQ1, IP040PHN1, IP040PHQ1, IP040PMN1, IP040PMQ1, IP060PHN1, IP060PHQ1, IP060PMN1, IP060PMQ1, JP040PHN1, JP040PHQ1, JP060PHN1, JP060PHQ1 and JP060PMQ1
6	C001038	Logo Decal	Models IP040PHN1, IP040PHQ1, IP040PMN1, IP040PMQ1, IP060PHN1, IP060PHQ1, IP060PMN1, IP060PMQ1, IPH40H, IPH40M, IPH60H, IPH60M, IPH180 and IPH270
7	C000694	Door Release Decal	
8	F230303	Push Decal	Models CP040PHN1, CP040PHQ1, CP040PMN1, CP040PMQ1, CP060PHN1, CP060PHQ1, CP060PMN1, CP060PMQ1, IP040PHN1, IP040PHQ1, IP040PMN1, IP040PMQ1, IP060PHN1, IP060PHQ1, IP060PMN1, IP060PMQ1, JP040PHN1, JP040PHQ1, JP060PHN1, JP060PHQ1 and JP060PMQ1

N/A = Part no longer available

© Copyright, Alliance Laundry Systems LLC – DO NOT COPY or TRANSMIT

Decals - Models starting 9/1/09

Models CP040PHN1, CP040PHQ1, CP040PHX2, CP040PMN1, CP040PMQ1, CP040PMX2, CP060PHN1, CP060PHN2, CP060PHQ1, CP060PHQ2, CP060PHX1, CP060PHX2, CP060PMN1, CP060PMQ1, CP060PMX2, IP040PHN1, IP040PHN2, IP040PHQ1, IP040PHX2, IP040PMN1, IP040PMQ1, IP040PMX2, IP060PHN1, IP060PHN2, IP060PHQ1, IP060PHQ2, IP060PHX2, IP060PMN1, IP060PMN2, IP060PMQ1, IP060PMX2, JP040PHN1, JP040PHQ1, JP060PHN1, JP060PHN2, JP060PHQ1 and JP060PMQ1

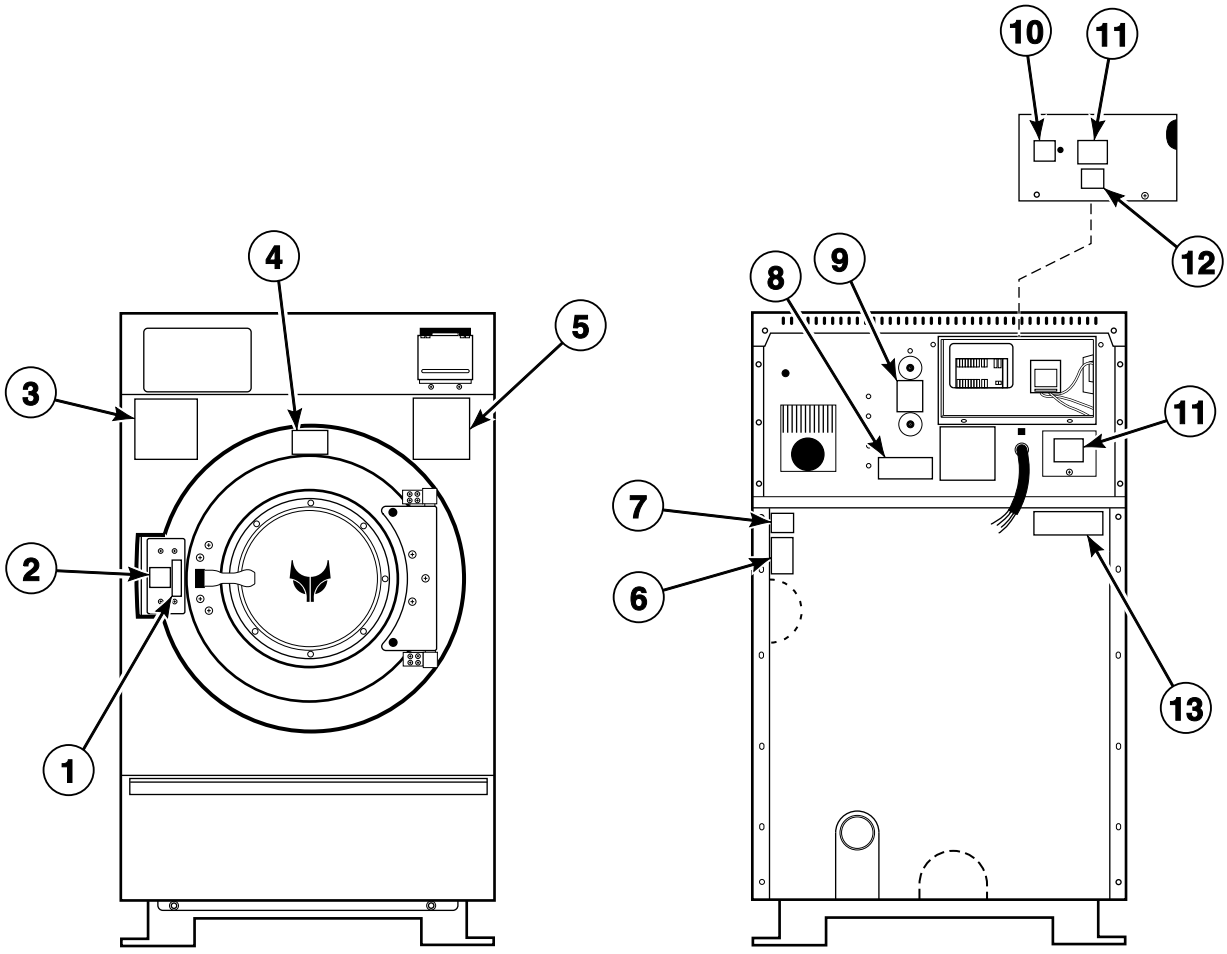

PHM3089P_C002874

© Copyright, Alliance Laundry Systems LLC – DO NOT COPY or TRANSMIT

Decals - Models starting 9/1/09

REF	PART NO.	DESCRIPTION	COMMENTS
1	C000694	Door Release Decal	
2	F230303	Push Decal	
3	F200085100	Spin Warning Decal	All models except JP040PHQ1, JP060PHQ1 and JP060PMQ1
4	F200085000	Hot Surface Warning Decal	
5	F200085300	Hot Water and Chemical Caution Decal	
6	F8614301	Hot Surface Warning Label	Steam models only
7	F8246401	Mount On Concrete Warning Label	
8	F200061000	Clean Filter Daily Decal	
9	C000508	Bearing Lubrication Decal	
10	F8150201	External Supply Connection Decal	
11	F8233501	Warning Label	
12	F8115501	Electric Shock Danger Label	
13	44324001	Warning Label	

© Copyright, Alliance Laundry Systems LLC – DO NOT COPY or TRANSMIT

Bearing Housing Assembly (Drawing 1 of 6)

Models CPC40H, CPC60H, IPH40H and IPH60H
Models Through 3/23/04

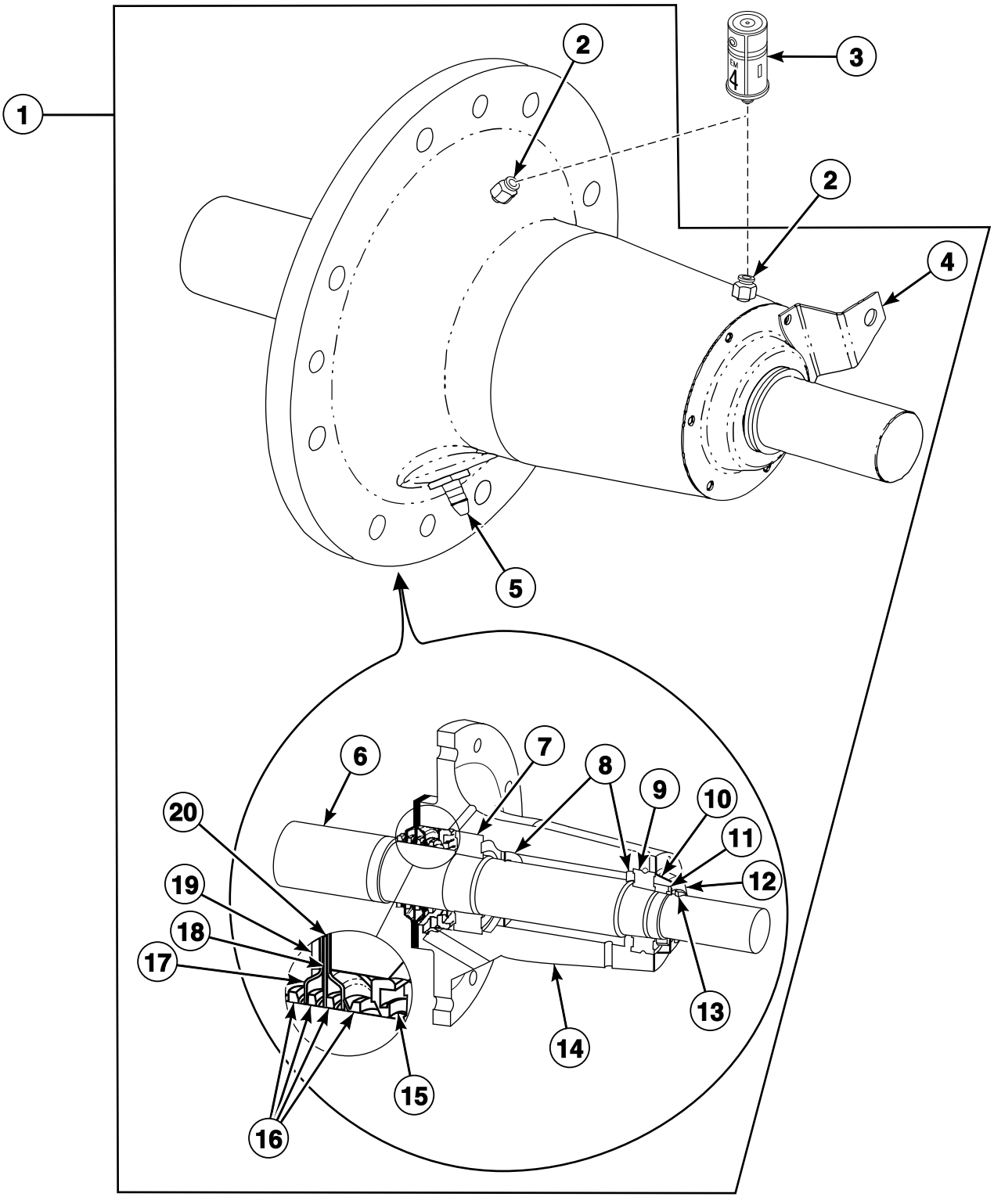

PHM2768P_C002874

© Copyright, Alliance Laundry Systems LLC – DO NOT COPY or TRANSMIT

Bearing Housing Assembly (Drawing 1 of 6)

REF	PART NO.	DESCRIPTION	COMMENTS
	C000147	Washer	8 required; Bearing housing to frame
	F430929	Screw	12 required; Front and rear seal plates to bearing housing
	C000571	Washer	12 required; Front and rear seal plates to bearing housing
	C001018	Screw	8 required; Bearing housing to frame; Models CPC40H and IPH40H
	C000145	Screw	8 required; Bearing housing to frame; Models CPC60H and IPH60H
	C002637P	Proximity Switch Assembly	1 required; Proximity switch on bearing housing
	C000552	Hose	25 inch; Weep hole fitting to drain line fitting
	C000628P	Tubing	2 required; 25 inch; Lube fittings to bearing housing
	F200201	Hose Clamp	2 required; Ship inside machine
	36801	Hose Clamp	1 required; Bearing weep hole “TEE”
1	C000058P	Bearing Housing Assembly	Includes items 2 and 4-20
2	J1408004	Connector	
3	212/00022/00P	Lubricator	Optional; Not installed
4	C000372	Mounting Bracket	
5	C001649	Reducing Connector	
6	C000068	Cylinder Shaft	
7	C000151	Carb Bearing	
8	C000064	Grease Shield	
9	C000152	Roller Bearing	
10	C000071	Washer	
11	C000063	Nut	
12	C000158	Seal Plate	
13	C000070	V-Ring Seal	
14	C000057	Bearing Housing	
15	C002959	Triple Lip Seal	
16	C000069	V-Ring Seal	
17	C000065	Seal Plate	
18	C000066	Seal Plate	
19	C001916	Plate	
20	C001704	Gasket	

© Copyright, Alliance Laundry Systems LLC – DO NOT COPY or TRANSMIT

Bearing Housing Assembly (Drawing 2 of 6)

Models CPC40H, CPC60H, IPH40H and IPH60H
Models Starting 3/23/04

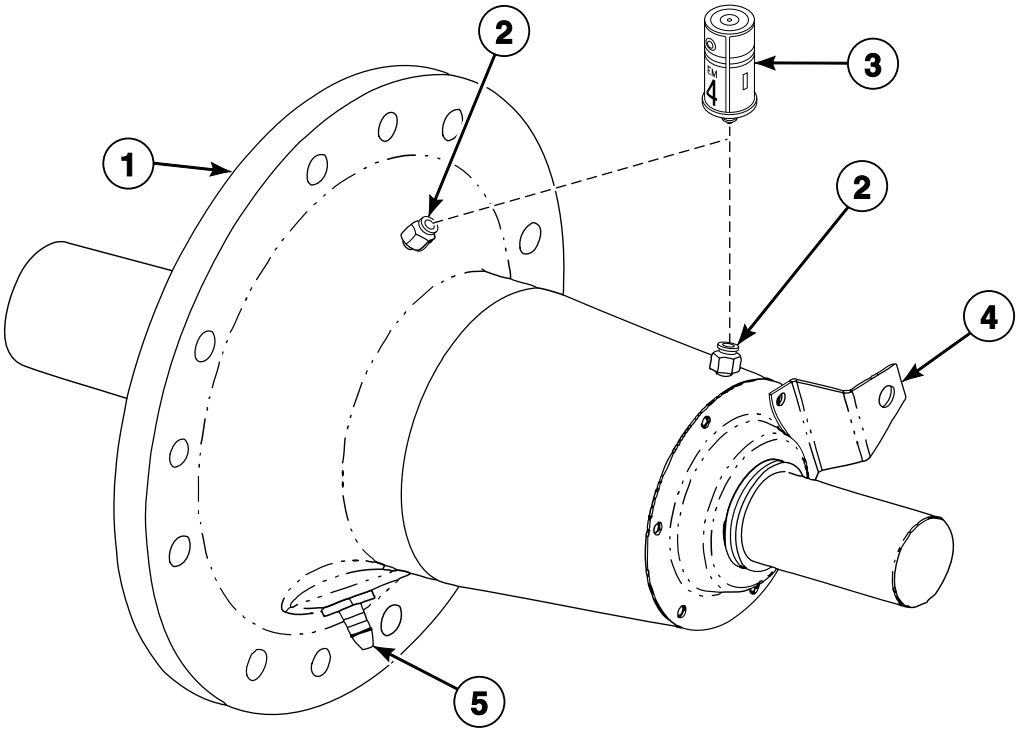

PHM2971P_C002874

© Copyright, Alliance Laundry Systems LLC – DO NOT COPY or TRANSMIT

Bearing Housing Assembly (Drawing 2 of 6)

REF	PART NO.	DESCRIPTION	COMMENTS
	C000147	Washer	8 required; Bearing housing to frame
	F430929	Screw	12 required; Front and rear seal plates to bearing housing
	C000571	Washer	12 required; Front and rear seal plates to bearing housing
	C001018	Screw	8 required; Bearing housing to frame; Models CPC40H and IPH40H
	C000145	Screw	8 required; Bearing housing to frame; Models CPC60H and IPH60H
	C002637P	Proximity Switch Assembly	1 required; Proximity switch on bearing housing
	C002959	Triple Lip Seal	
	C000552	Hose	25 inch; Weep hole fitting to drain line fitting
	C000628P	Tubing	2 required; 25 inch; Lube fittings to bearing housing
	36801	Hose Clamp	1 required; Bearing weep hole “TEE”
	1390P	Bearing Housing Puller Kit	Purchase
	1390-1	Bearing Housing Puller Kit	Rental; Requires C002023 Hardware Kit
	C002023	Hardware Kit	Use with Rental 1390-1 Bearing Housing Puller Kit
1	C000058P	Bearing Housing Assembly	Includes items 2 and 5; Standard seals
	C001364P	Bearing Housing Assembly	Includes items 2 and 5; Viton seals
2	J1408004	Connector	
3	212/00022/00P	Lubricator	Optional; Not installed
4	C000372	Mounting Bracket	
5	C001649	Reducing Connector	

© Copyright, Alliance Laundry Systems LLC – DO NOT COPY or TRANSMIT

Bearing Housing Assembly (Drawing 3 of 6)

Models CPC40M, CPC60M, IPH40M, IPH60M, IPH180 and IPH270
Models Through 3/23/04

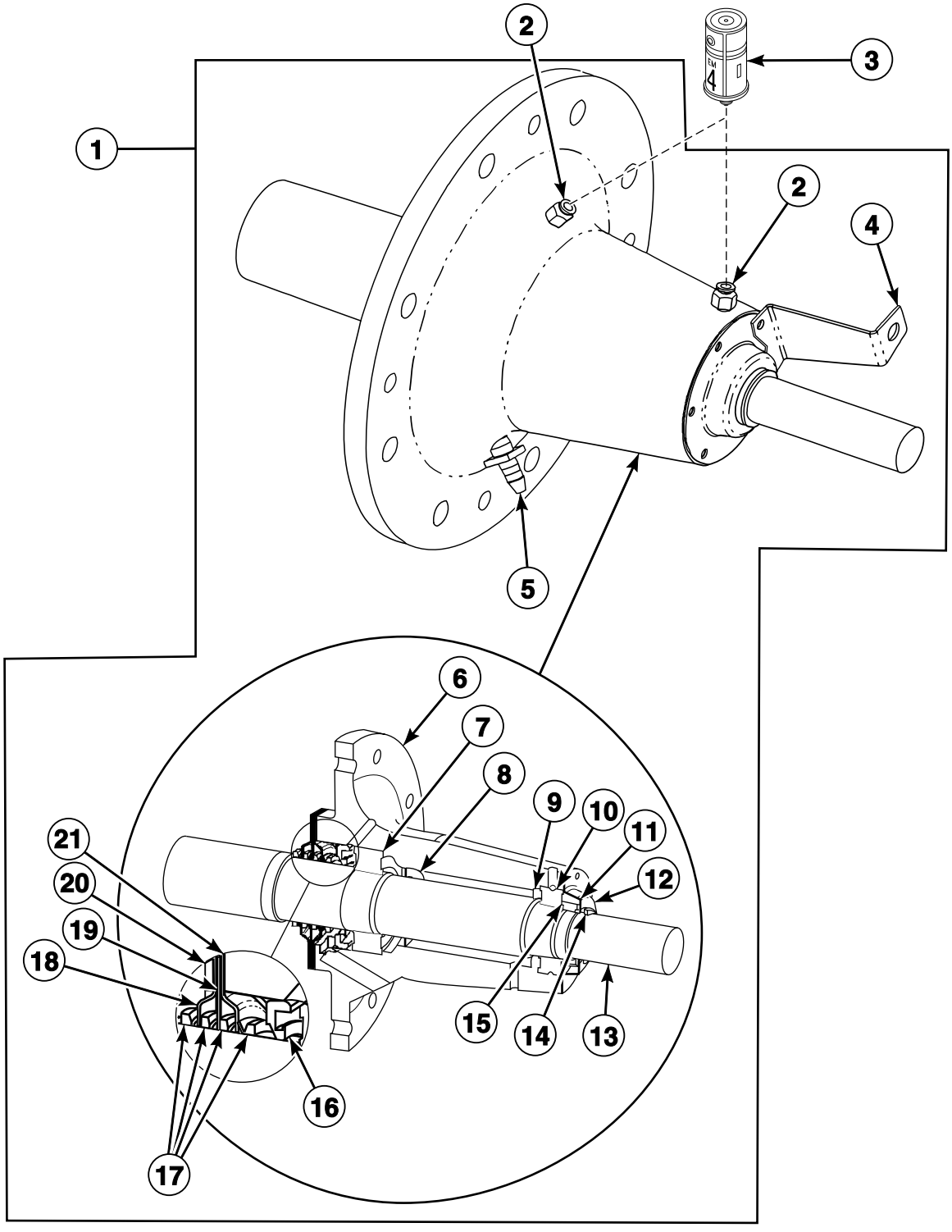

PHM2769P_C002874

© Copyright, Alliance Laundry Systems LLC – DO NOT COPY or TRANSMIT

Bearing Housing Assembly (Drawing 3 of 6)

REF	PART NO.	DESCRIPTION	COMMENTS
	C001019	Screw	8 required; Bearing housing to frame; Models CPC40M, IPH40M and IPH180
	C001018	Screw	8 required; Bearing housing to frame; Models CPC60M, IPH60M and IPH270
	C000147	Washer	16 required; Bearing housing to frame
	F430929	Screw	12 required; Front and rear seal plates to bearing housing
	C000571	Washer	12 required; Front and rear seal plates to bearing housing
	C002637P	Proximity Switch Assembly	1 required; Proximity switch on bearing housing
	C000552	Hose	25 inch; Weep hole fitting to drain line fitting
	C000628P	Tubing	2 required; 25 inch; Lube fittings to bearing housing
	36801	Hose Clamp	1 required; Bearing weep hole “TEE”
1	C000728P	Bearing Housing Assembly	Includes items 2 and 4-21
2	J1408004	Connector	
3	212/00022/00P	Lubricator	Optional; Not installed
4	C000372	Mounting Bracket	
5	C001649	Reducing Connector	
6	C000725	Bearing Housing	
7	C000485	Carb Bearing	
8	C000729	Front Grease Shield	
9	C000730	Rear Grease Shield	
10	C000486	Roller Bearing	
11	C000488	Washer	
12	C000727	Seal Plate	
13	C000726	Cylinder Shaft	
14	C000731	V-Ring Seal	
15	C000487	Nut	
16	C002959	Triple Lip Seal	
17	C000069	V-Ring Seal	
18	C000065	Seal Plate	
19	C000066	Seal Plate	
20	C001916	Plate	
21	C001704	Gasket	

© Copyright, Alliance Laundry Systems LLC – DO NOT COPY or TRANSMIT

Bearing Housing Assembly (Drawing 4 of 6)

Models CPC40M, CPC60M, IPH40M, IPH60M, IPH180 and IPH270
Models Starting 3/23/04

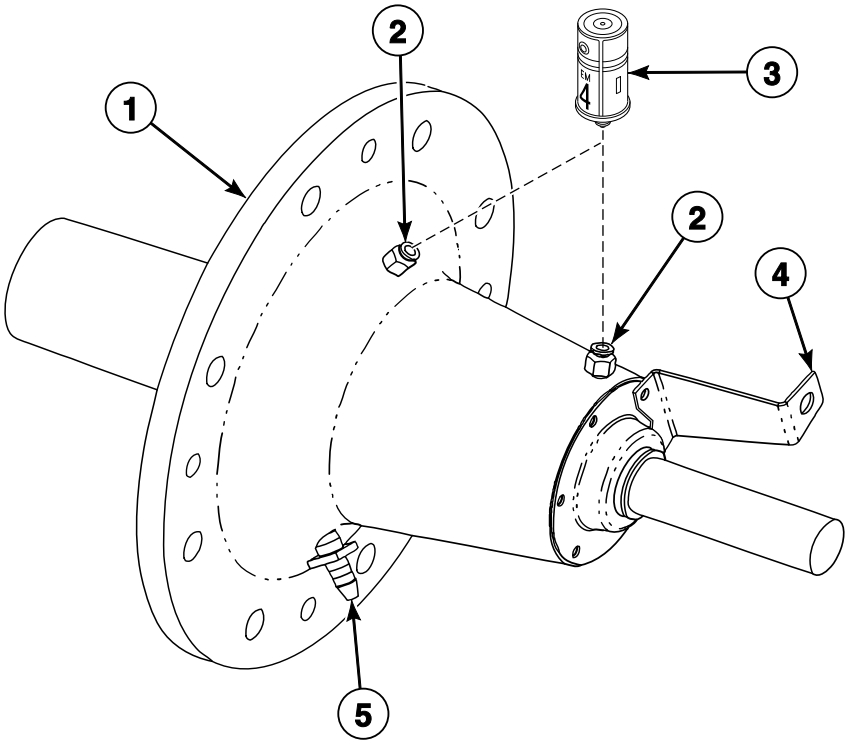

PHM2972P_C002874

© Copyright, Alliance Laundry Systems LLC – DO NOT COPY or TRANSMIT

Bearing Housing Assembly (Drawing 4 of 6)

REF	PART NO.	DESCRIPTION	COMMENTS
	C001019	Screw	8 required; Bearing housing to frame; Models CPC40M, IPH40M and IPH180
	C001018	Screw	8 required; Bearing housing to frame; Models CPC60M, IPH60M and IPH270
	C000147	Washer	16 required; Bearing housing to frame
	F430929	Screw	12 required; Front and rear seal plates to bearing housing
	C000571	Washer	12 required; Front and rear seal plates to bearing housing
	C002637P	Proximity Switch Assembly	1 required; Proximity switch on bearing housing
	C002959	Triple Lip Seal	
	C000552	Hose	25 inch; Weep hole fitting to drain line fitting
	C000628P	Tubing	2 required; 25 inch; Lube fittings to bearing housing
	36801	Hose Clamp	1 required; Bearing weep hole “TEE”
	1390P	Bearing Housing Puller Kit	Purchase
	1390-1	Bearing Housing Puller Kit	Rental; Requires C002023 Hardware Kit
	C002023	Hardware Kit	Use with Rental 1390-1 Bearing Housing Puller Kit
1	C000728P	Bearing Housing Assembly	Includes items 2 and 5; Standard seals
2	J1408004	Connector	
3	212/00022/00P	Lubricator	Optional; Not installed
4	C001037	Mounting Bracket	
5	C001649	Reducing Connector	

© Copyright, Alliance Laundry Systems LLC – DO NOT COPY or TRANSMIT

Bearing Housing Assembly (Drawing 5 of 6)

Models CP040PHN1, CP040PHQ1, CP040PHX2, CP060PHN1, CP060PHN2, CP060PHQ1, CP060PHQ2, CP060PHX1, CP060PHX2, IP040PHN1, IP040PHN2, IP040PHQ1, IP040PHX2, IP060PHN1, IP060PHN2, IP060PHQ1, IP060PHQ2, IP060PHX2, IPH270, JP040PHN1, JP040PHQ1, JP060PHN1, JP060PHN2 and JP060PHQ1

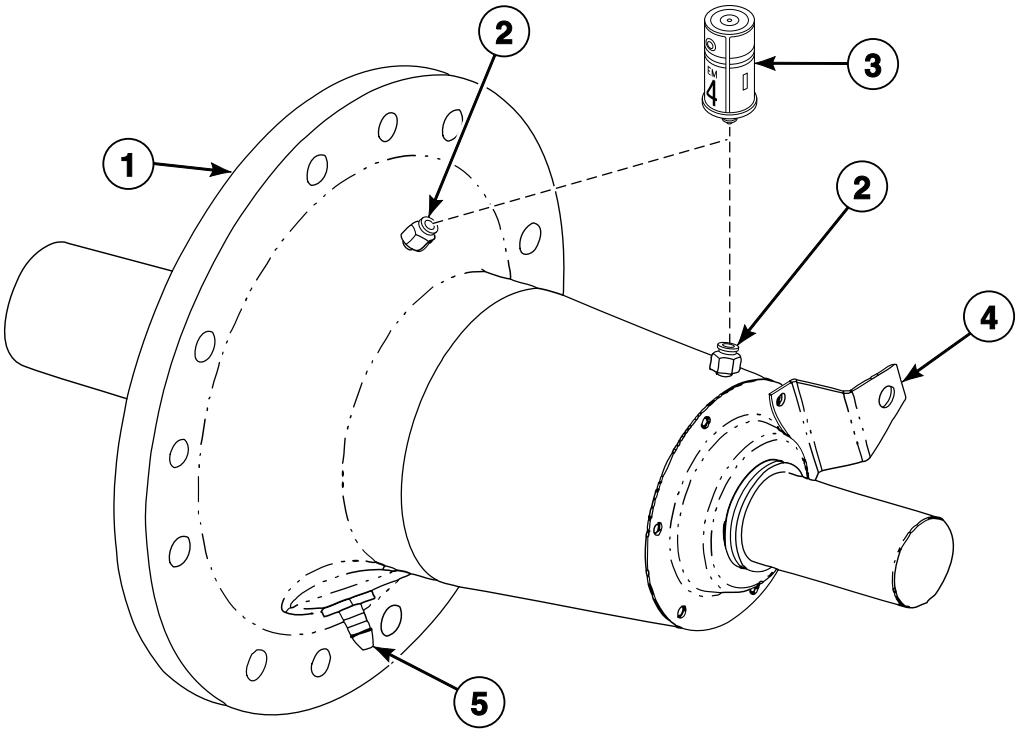

PHM2971P_C002874

© Copyright, Alliance Laundry Systems LLC – DO NOT COPY or TRANSMIT

Bearing Housing Assembly (Drawing 5 of 6)

REF	PART NO.	DESCRIPTION	COMMENTS
	C000147	Washer	8 required; Bearing housing to frame
	F430929	Screw	12 required; Front and rear seal plates to bearing housing
	C000571	Washer	12 required; Front and rear seal plates to bearing housing
	C001018	Screw	8 required; Bearing housing to frame; Models CP040PHN1, CP040PHQ1, IP040PHN1, IP040PHQ1 and JP040PHN1
	C000145	Screw	8 required; Bearing housing to frame; Models CP060PHN1, CP060PHN2, CP060PHQ1, CP060PHQ2, CP060PHX1, CP060PHX2, IP060PHN1, IP060PHN2, IP060PHQ1, IP060PHQ2 and JP060PHQ1
	C002637P	Proximity Switch Assembly	1 required; Proximity switch on bearing housing
	C002959	Triple Lip Seal	
	C000552	Hose	25 inch; Weep hole fitting to drain line fitting
	C000628P	Tubing	2 required; 25 inch; Lube fittings to bearing housing
	F200201	Hose Clamp	2 required; Ship inside machine; Models through 3/23/04
	36801	Hose Clamp	1 required; Bearing weep hole “TEE”
	1390P	Bearing Housing Puller Kit	Purchase
	1390-1	Bearing Housing Puller Kit	Rental; Requires C002023 Hardware Kit
	C002023	Hardware Kit	Use with Rental 1390-1 Bearing Housing Puller Kit
1	C000058P	Bearing Housing Assembly	Includes items 2 and 5; Standard seals
	C001364P	Bearing Housing Assembly	Includes items 2 and 5; Viton seals
2	J1408004	Connector	
3	212/00022/00P	Lubricator	Optional; Not installed
4	C000372	Mounting Bracket	
5	C001649	Reducing Connector	

© Copyright, Alliance Laundry Systems LLC – DO NOT COPY or TRANSMIT

Bearing Housing Assembly (Drawing 6 of 6)

Models CP040PMN1, CP040PMQ1, CP040PMX2, CP060PMN1, CP060PMQ1, CP060PMX2, IP040PMN1, IP040PMQ1, IP040PMX2, IP060PMN1, IP060PMN2, IP060PMQ1, IP060PMX2, IPH270 and JP060PMQ1

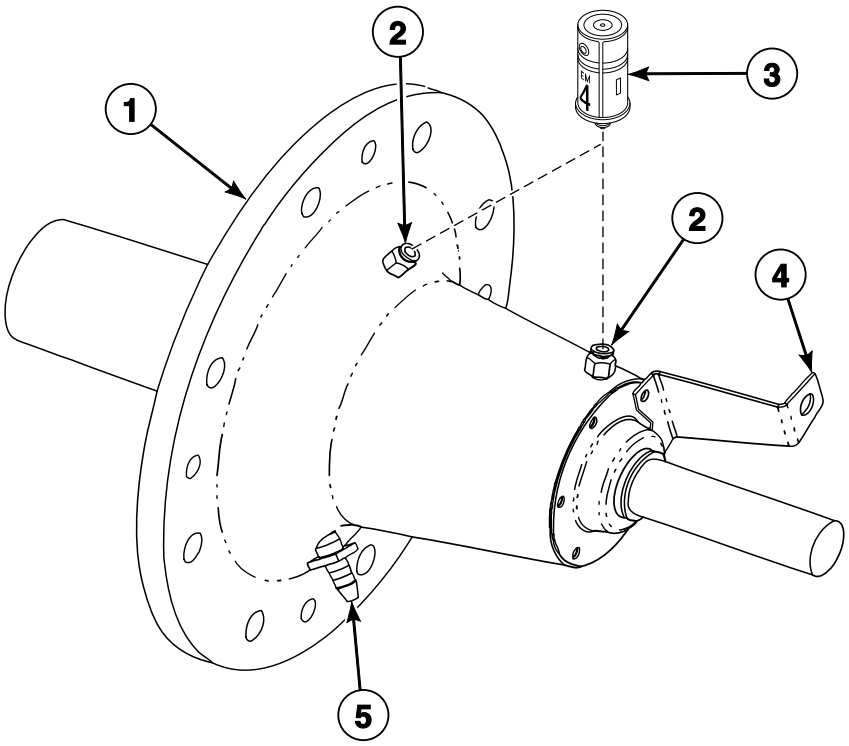

PHM2972P_C002874

© Copyright, Alliance Laundry Systems LLC – DO NOT COPY or TRANSMIT

Bearing Housing Assembly (Drawing 6 of 6)

REF	PART NO.	DESCRIPTION	COMMENTS
	C001019	Screw	8 required; Bearing housing to frame; Models CP040PMN1, CP040PMQ1, IP040PMN1 and IP040PMQ1
	C001018	Screw	8 required; Bearing housing to frame; Models CP060PMN1, CP060PMQ1, IP060PMN1, IP060PMQ1, IPH270 and JP060PMQ1
	C000147	Washer	16 required; Bearing housing to frame
	F430929	Screw	12 required; Front and rear seal plates to bearing housing
	C000571	Washer	12 required; Front and rear seal plates to bearing housing
	C002637P	Proximity Switch Assembly	1 required; Proximity switch on bearing housing
	C002959	Triple Lip Seal	
	C000552	Hose	25 inch; Weep hole fitting to drain line fitting
	C000628P	Tubing	2 required; 25 inch; Lube fittings to bearing housing
	36801	Hose Clamp	1 required; Bearing weep hole “TEE”
	1390P	Bearing Housing Puller Kit	Purchase
	1390-1	Bearing Housing Puller Kit	Rental; Requires C002023 Hardware Kit
	C002023	Hardware Kit	Use with Rental 1390-1 Bearing Housing Puller Kit
1	C000728P	Bearing Housing Assembly	Includes items 2 and 5; Standard seals
	C002032P	Bearing Housing Assembly	Includes items 2 and 5; Viton seals
2	J1408004	Connector	
3	212/00022/00P	Lubricator	Optional; Not installed
4	C001037	Mounting Bracket	
5	C001649	Reducing Connector	

© Copyright, Alliance Laundry Systems LLC – DO NOT COPY or TRANSMIT

Top and Front Panels (Drawing 1 of 2)

Models CP040PHN1, CP040PHQ1, CP040PHX2, CP040PMN1, CP040PMQ1, CP040PMX2, CPC40H, CPC40M, IP040PHN1, IP040PHN2, IP040PHQ1, IP040PHX2, IP040PMN1, IP040PMQ1, IP040PMX2, IPH40H, IPH40M, IPH180, JP040PHN1 and JP040PHQ1

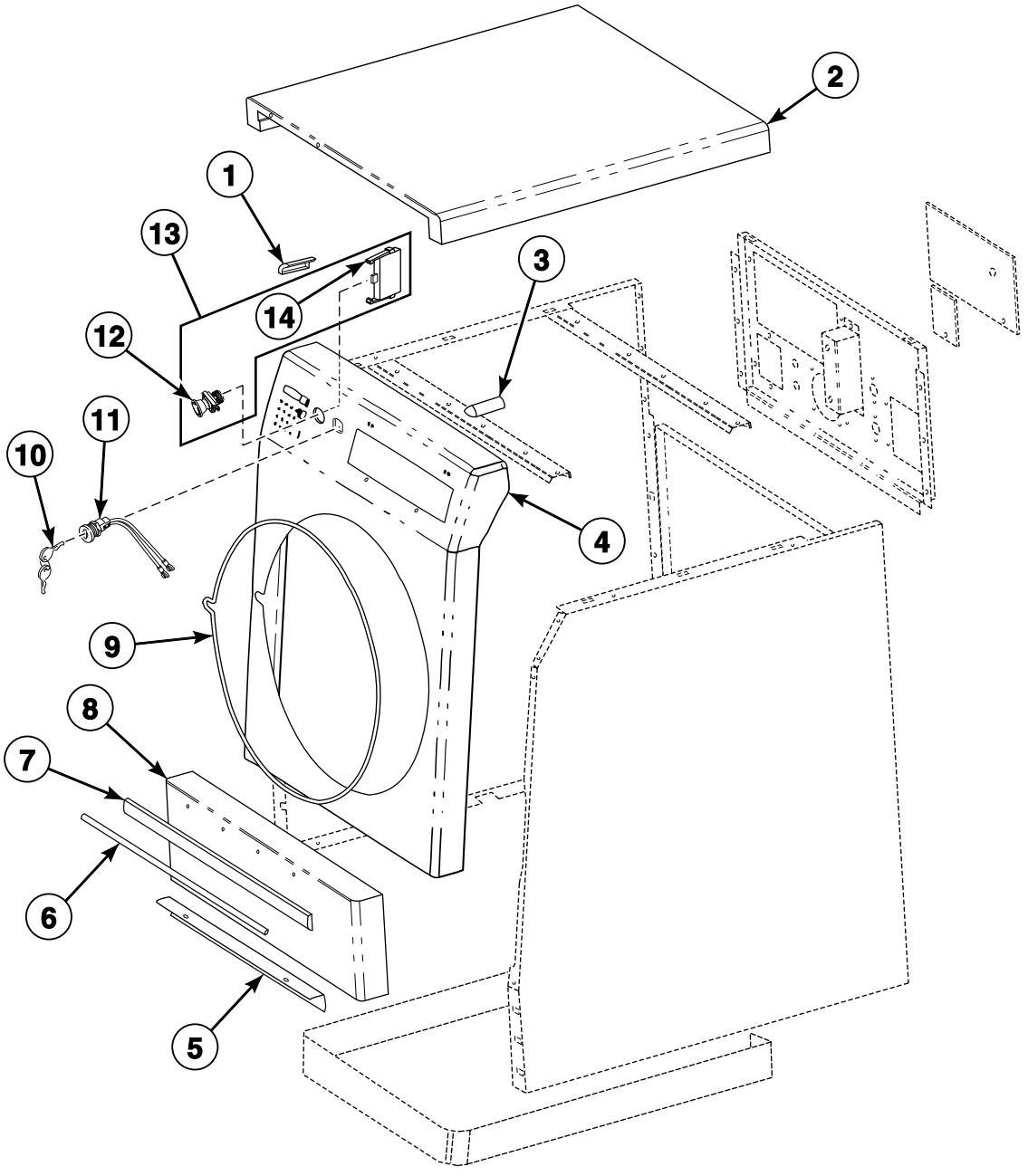

PHM2945P_C002874

© Copyright, Alliance Laundry Systems LLC – DO NOT COPY or TRANSMIT

Top and Front Panels (Drawing 1 of 2)

REF	PART NO.	DESCRIPTION	COMMENTS
	C000567	Screw	2 required for top panel to valve panel; 12 required for front panel to side panel; 2 required for lower front panel to frame; 4 or 5 required for front electrical mounting bracket to side panel
	F431024	Nut	4 required for front panel to side panel; 4 or 5 required for front electrical mounting bracket to side panel
	N/A	Nut	2 required for top panel to valve panel; 2 required for lower front panel to frame
	C000571	Washer	2 required for top panel to valve panel; 2 required for lower front panel to frame
	C000585	Washer	2 required for lower front panel to frame
	F430910	Screw	6 required for rub rails to lower front panel; Models starting 3/23/04
	C000568	Nut	6 required for rub rails to lower front panel; Models starting 3/23/04
1	C000483	Control Panel Insert	
2	C000513P	Top Panel	
3	C000484	Control Panel Insert	
4	C002967P	Front Panel Assembly	5 compartment
	C002966	Front Panel Assembly	1 compartment
5	C002984	Lower Front Adjustment Bracket Assembly	Models starting 3/23/04
6	C001013	Insert Rail	Models starting 3/23/04
7	C001012	Rub Rail	Vinyl; Models starting 3/23/04
8	N/A	Lower Front Panel	Models through 3/23/04
	C001246	Front Panel	Models starting 3/23/04
9	C000629	Trim Gasket	Black; 10 feet; Models starting 3/23/04
10	1242	Programming Key	
11	C003024P	Keymode Switch Assembly	
12	F200233500	Emergency Stop Pushbutton	
13	F200233700P	Emergency Stop Button Kit	Includes items 12 and 14
14	F200233401P	Contact Block Switch	Includes F8069501 Contact Switch and F8538101 Contact Base
	F8069501	Contact Switch	
	F8538101	Contact Base	

N/A = Part no longer available

© Copyright, Alliance Laundry Systems LLC – DO NOT COPY or TRANSMIT

Top and Front Panels (Drawing 2 of 2)

Models CP060PHN1, CP060PHN2, CP060PHQ1, CP060PHQ2, CP060PHX1, CP060PHX2, CP060PMN1, CP060PMQ1, CP060PMX2, CPC60H, CPC60M, IP060PHN1, IP060PHN2, IP060PHQ1, IP060PHQ2, IP060PHX2, IP060PMN1, IP060PMN2, IP060PMQ1, IP060PMX2, IPH60H, IPH60M, IPH270, JP060PHN1, JP060PHN2, JP060PHQ1 and JP060PMQ1

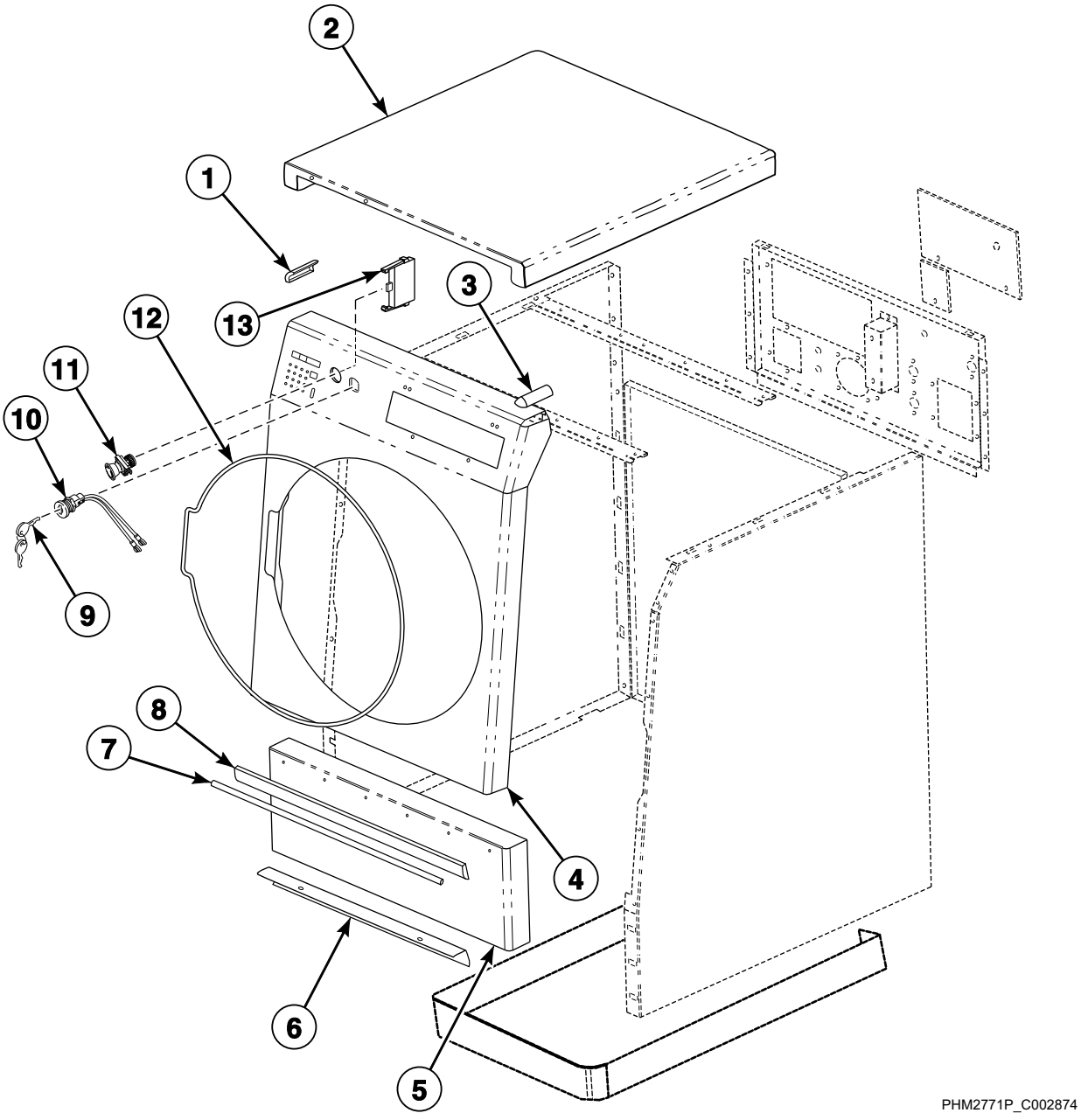

© Copyright, Alliance Laundry Systems LLC – DO NOT COPY or TRANSMIT

Top and Front Panels (Drawing 2 of 2)

REF	PART NO.	DESCRIPTION	COMMENTS
	C000567	Screw	2 required for top panel to valve panel; 12 required for front panel to side panel; 2 required for lower front panel to frame; 4 or 5 required for front electrical mounting bracket to side panel
	F431024	Nut	4 required for front panel to side panel; 4 or 5 required for front electrical mounting bracket to side panel
	N/A	Nut	2 required for top panel to valve panel; 2 required for lower front panel to frame
	C000571	Washer	2 required for top panel to valve panel; 2 required for lower front panel to frame
	C000585	Washer	2 required for lower front panel to frame
	F430910	Screw	6 required for rub rails to lower front panel
	C000568	Nut	6 required for rub rails to lower front panel
1	C000484	Control Panel Insert	
2	C000050	Top Panel	
3	C000483	Control Panel Insert	
4	C002968	Front Panel Assembly	1 compartment
	C002969	Front Panel Assembly	5 compartment
5	N/A	Lower Front Panel	Models through 3/23/04
	C001248	Front Panel	Models starting 3/23/04
6	C002985	Lower Front Adjustment Bracket Assembly	Models starting 3/23/04
7	C000636	Insert Rail	
8	C000633	Rub Rail	Vinyl
9	1242	Programming Key	
10	C003024P	Keymode Switch Assembly	
11	F200233500	Emergency Stop Pushbutton	
12	C000629	Trim Gasket	Black; 11 feet; Models starting 3/23/04
13	F200233401P	Contact Block Switch	

N/A = Part no longer available

© Copyright, Alliance Laundry Systems LLC – DO NOT COPY or TRANSMIT

Rear, Side and Valve Panels (Drawing 1 of 2)

Models CP040PHN1, CP040PHQ1, CP040PHX2, CP040PMN1, CP040PMQ1, CP040PMX2, CPC40H, CPC40M, IP040PHN1, IP040PHN2, IP040PHQ1, IP040PHX2, IP040PMN1, IP040PMQ1, IP040PMX2, IPH40H, IPH40M, IPH180, JP040PHN1 and JP040PHQ1

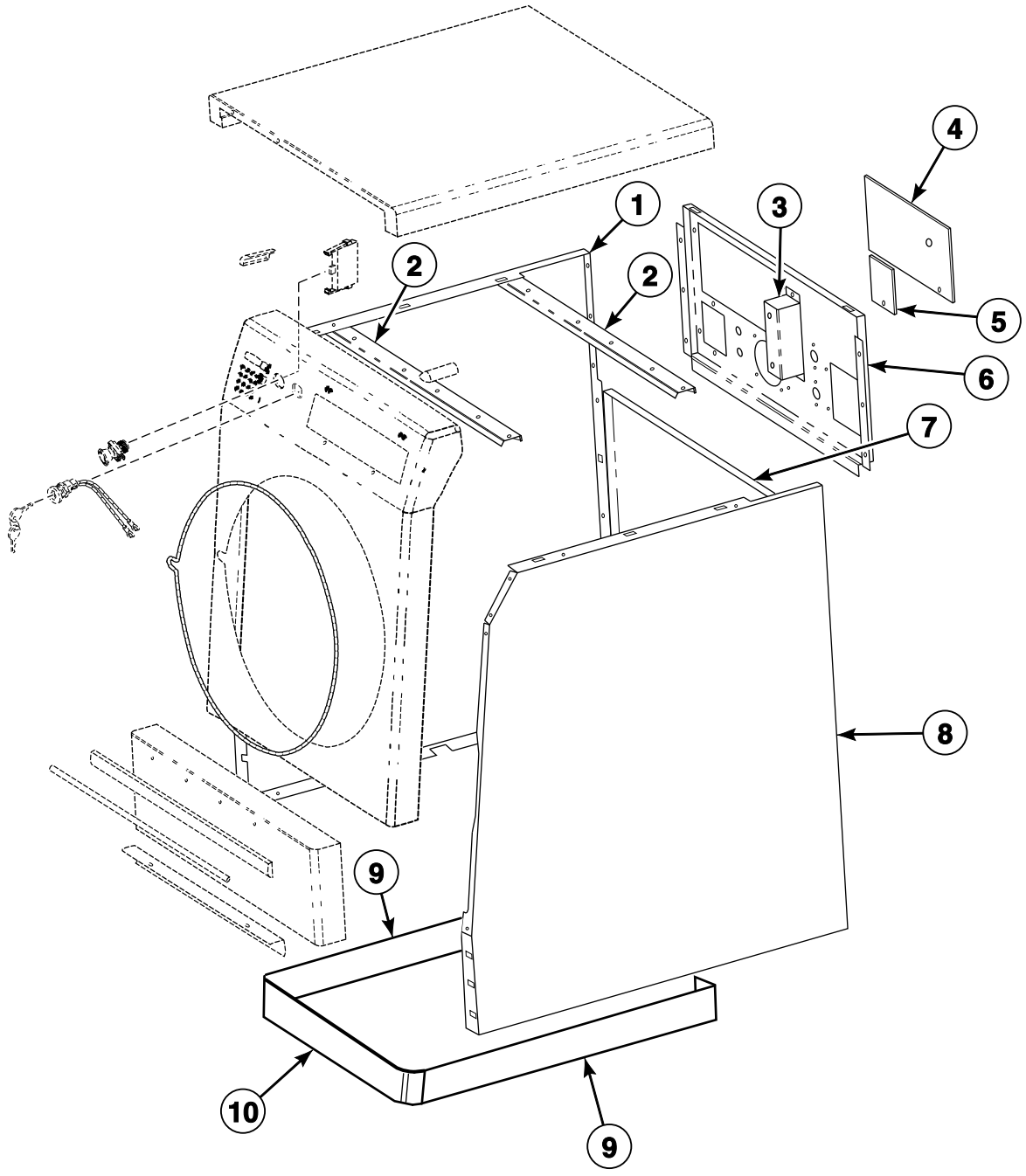

PHM2770PA_C002874

© Copyright, Alliance Laundry Systems LLC – DO NOT COPY or TRANSMIT

Rear, Side and Valve Panels (Drawing 1 of 2)

REF	PART NO.	DESCRIPTION	COMMENTS
	C000567	Screw	6 required for valve panel to side panel; 2 required for top panel to valve panel; 12 required for front panel to side panel; 6 required for side panel to frame; 4 required for rear cover to side panel; 4 or 5 required for front electrical mounting bracket to side panel; 2 required for grease box to valve panel
	F431024	Nut	6 required for valve panel to side panel; 4 required for front panel to side panel; 4 or 5 required for front electrical mounting bracket to side panel; 2 required for grease box to valve panel
	N/A	Nut	2 required for top panel to valve panel; 6 required for side panel to frame; 2 required for rear electrical cover to valve panel
	C000571	Washer	2 required for top panel to valve panel; 6 required for side panel to frame; 4 required for rear cover to side panel
	C000585	Washer	6 required for side panel to frame
	F430929	Screw	2 required for rear electrical cover to valve panel; 1 required for inlet power cover to valve panel
1	C002696	Side Panel and Stiffener Assembly	
2	C000533	Front Electrical Enclosure Rail	
3	C000539	Grease Connector Box	
4	C000173	Rear Electrical Enclosure Cover	
5	N/A	Inlet Power Cover	Models through 3/23/04
	C001257	Inlet Power Cover	Models starting 3/23/04
6	C002979	Valve Panel Assembly	
7	C000525	Rear Panel	
8	C002695	Side Panel and Stiffener Assembly	
9	N/A	Side Skirt Panel	Models through 3/23/04
10	C000530	Front Skirt Panel	Models through 3/23/04

N/A = Part no longer available

© Copyright, Alliance Laundry Systems LLC – DO NOT COPY or TRANSMIT

Rear, Side and Valve Panels (Drawing 2 of 2)

Models CP060PHN1, CP060PHN2, CP060PHQ1, CP060PHQ2, CP060PHX1, CP060PHX2, CP060PMN1, CP060PMQ1, CP060PMX2, CPC60H, CPC60M, IP060PHN1, IP060PHN2, IP060PHQ1, IP060PHQ2, IP060PHX2, IP060PMN1, IP060PMN2, IP060PMQ1, IP060PMX2, IPH60H, IPH60M, IPH270, JP060PHN1, JP060PHN2, JP060PHQ1 and JP060PMQ1

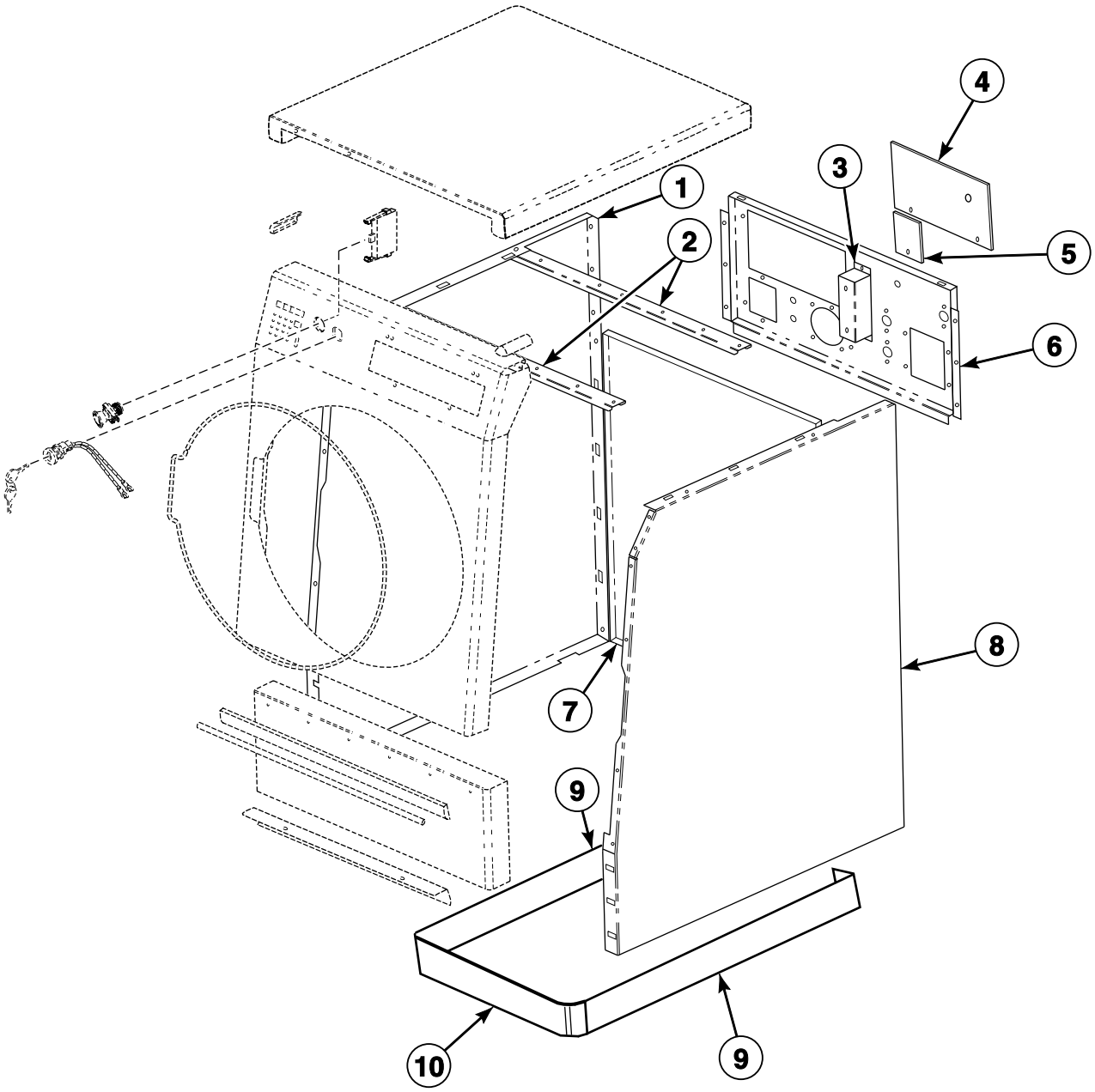

PHM2771PA_C002874

© Copyright, Alliance Laundry Systems LLC – DO NOT COPY or TRANSMIT

Rear, Side and Valve Panels (Drawing 2 of 2)

REF	PART NO.	DESCRIPTION	COMMENTS
	C000567	Screw	6 required for valve panel to side panel; 2 required for top panel to valve panel; 12 required for front panel to side panel; 6 required for side panel to frame; 4 required for rear cover to side panel; 4 or 5 required for front electrical mounting bracket to side panel; 2 required for grease box to valve panel
	F431024	Nut	6 required for valve panel to side panel; 4 required for front panel to side panel; 4 or 5 required for front electrical mounting bracket to side panel; 2 required for grease box to valve panel
	N/A	Nut	2 required for top panel to valve panel; 6 required for side panel to frame; 2 required for rear electrical cover to valve panel
	C000571	Washer	2 required for top panel to valve panel; 6 required for side panel to frame; 4 required for rear cover to side panel
	C000585	Washer	6 required for side panel to frame
	F430929	Screw	2 required for rear electrical cover to valve panel; 1 required for inlet power cover to valve panel
1	C002708	Side Panel and Stiffener Assembly	Right
2	C000218	Front Electrical Enclosure Rail	
3	C000539	Grease Connector Box	
4	C000173	Rear Electrical Enclosure Cover	
5	N/A	Inlet Power Cover	Models through 3/23/04
	C001257	Inlet Power Cover	Models starting 3/23/04
6	C002980	Valve Panel Assembly	
7	C000051	Rear Panel	
8	C002707	Side Panel and Stiffener Assembly	Left
9	N/A	Side Skirt Panel	Models through 3/23/04
10	C000314	Front Skirt Panel	Models through 3/23/04

N/A = Part no longer available

© Copyright, Alliance Laundry Systems LLC – DO NOT COPY or TRANSMIT

Control Box Assembly

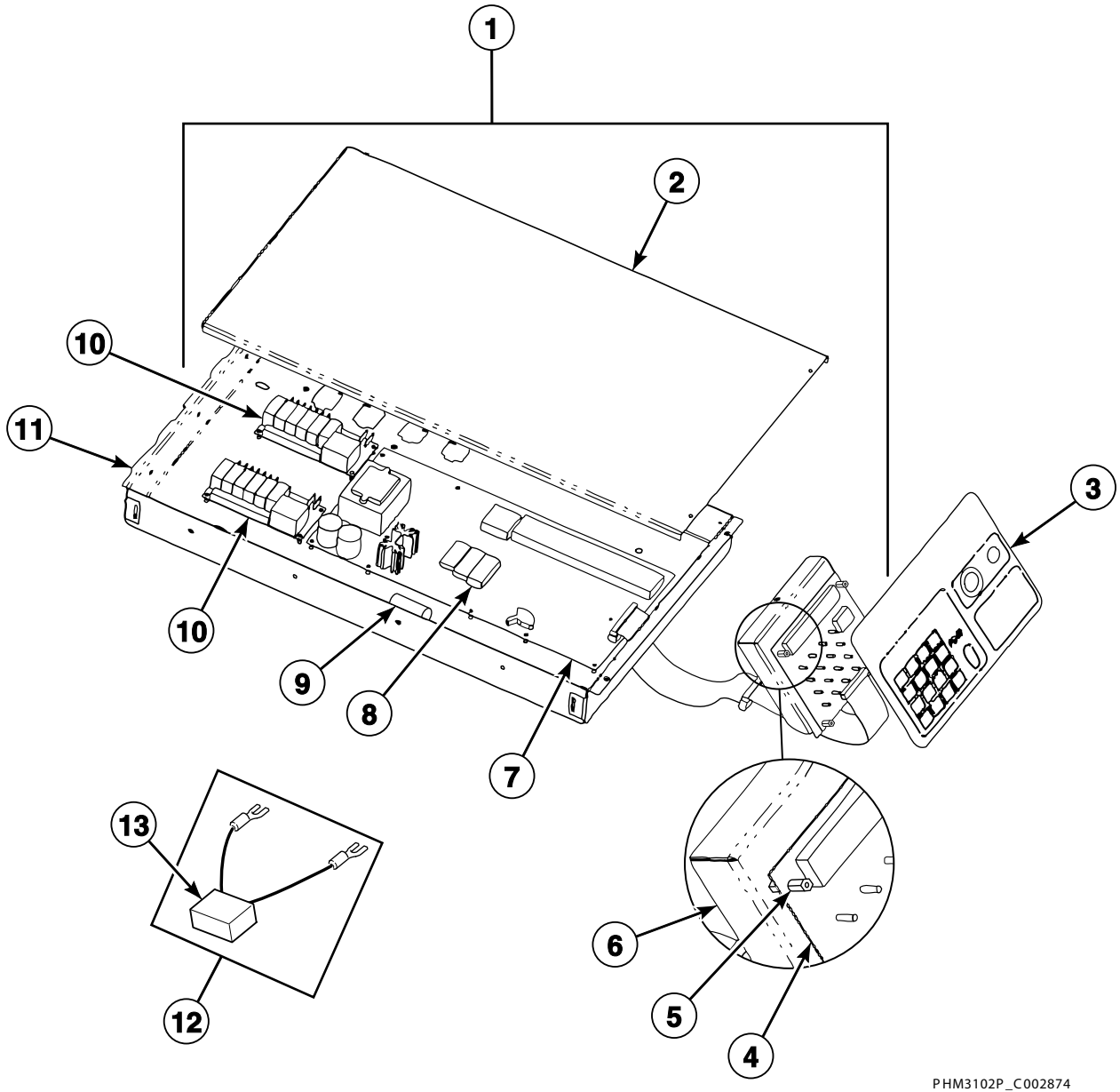

© Copyright, Alliance Laundry Systems LLC – DO NOT COPY or TRANSMIT

Control Box Assembly

REF	PART NO.	DESCRIPTION	COMMENTS
	F431133	Washer	4 required for keypad to keypad mounting plate; Models starting 3/23/04
	F430910	Screw	4 required for keypad to keypad mounting plate
	C000567	Screw	1 required for keypad mounting plate to control panel; 4 required for electrical box to mounting bracket
	F431024	Nut	1 required for keypad mounting plate to control panel
	N/A	Nut	4 required for electrical box to mounting bracket
	C000571	Washer	4 required for electrical box to mounting bracket
	F430909	Screw	2 required for electrical box cover to electrical box; 1 required for ground connection to electrical box for models through 03/23/04; 2 required for ground connection to electrical box for models starting 3/23/04
	C000865	Control Module Harness	
	210/00902/00P	Infrared Cable Kit	
1	C000432	Front Electrical Enclosure Assembly	
2	C000348	Front Electrical Enclosure Cover	
3	C001276	Control Panel Decal	Models IP040PHN1, IP040PHN2, IP040PHQ1, IP040PMN1, IP040PMQ1, IP060PHN1, IP060PHN2, IP060PHQ1, IP060PHQ2, IP060PHX2, IP060PMN1, IP060PMN2, IP060PMQ1, IPH180, IPH270, IPH40H, IPH40M, IPH60H and IPH60M
	C001389	Control Panel Decal	Models CP040PHN1, CP040PHQ1, CP040PMN1, CP040PMQ1, CP060PHN1, CP060PHN2, CP060PHQ1, CP060PHQ2, CP060PHX1, CP060PHX2, CP060PMN1, CP060PMQ1, CPC40H, CPC40M, CPC60H and CPC60M
	C001069	Control Panel Decal	Models JP040PHN1, JP040PHQ1, JP060PHN1, JP060PHN2, JP060PHQ1 and JP060PMQ1
4	C000282P	Keypad Controller	
5	C000376	Standoff	8 required for keypad to keypad mounting plate
6	C000375	Mounting Bracket	
7	C000281P	Main Board Controller Kit	Includes item 9
8	209/00505/04P	Battery	
9	C002642P	Tilt Switch Assembly	
10	C000371P	Chemical Supply Controller	
11	C000213	Front Electrical Enclosure	
12	C002999	RC Network Assembly	
13	F330217P	RC Network Filter	

N/A = Part no longer available

© Copyright, Alliance Laundry Systems LLC – DO NOT COPY or TRANSMIT

Cylinder Assembly

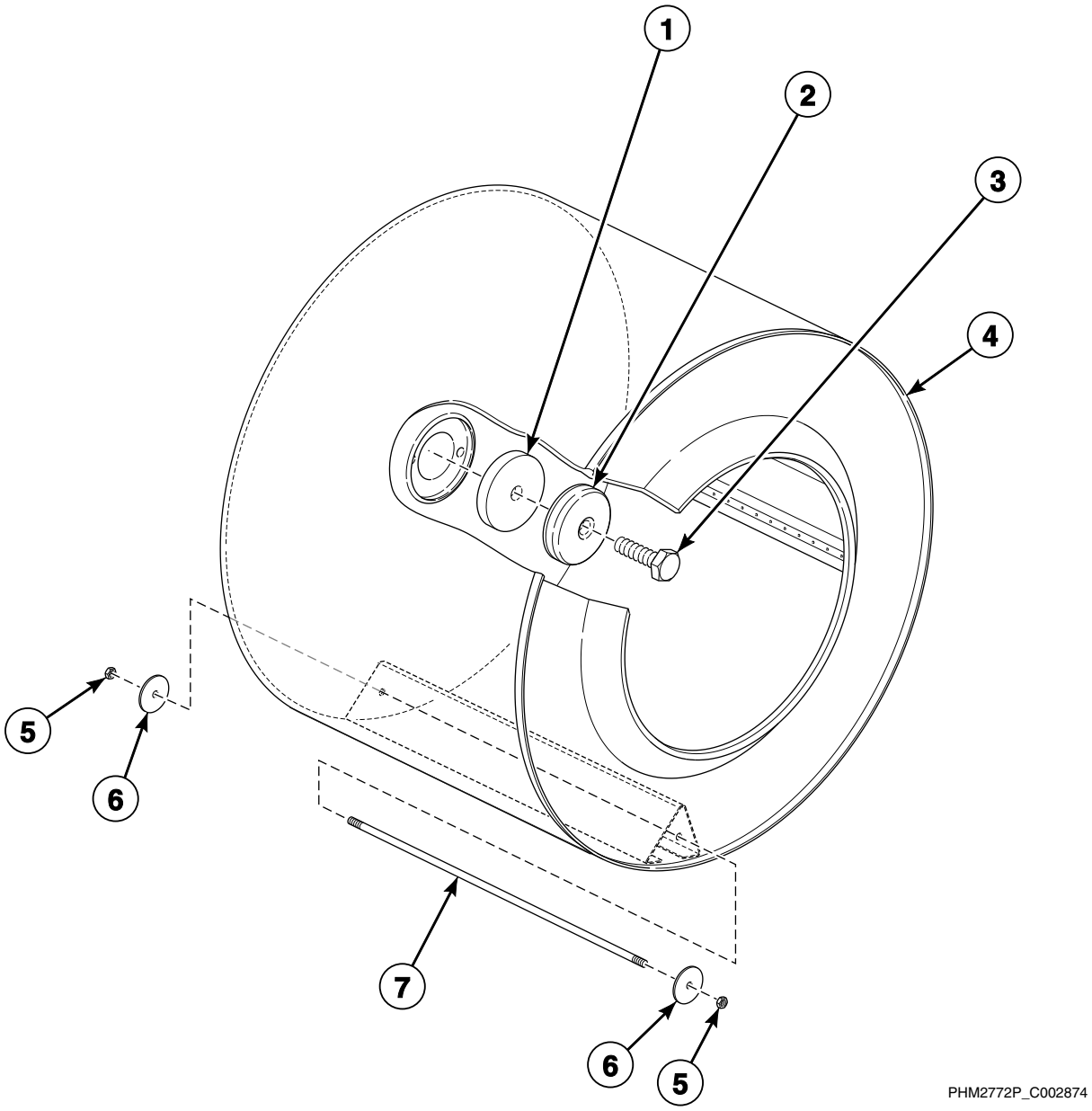

© Copyright, Alliance Laundry Systems LLC – DO NOT COPY or TRANSMIT

Cylinder Assembly

REF	PART NO.	DESCRIPTION	COMMENTS
	C000583	Washer	Models starting 3/23/04
1	N/A	Washer	Models through 3/23/04
	C001239	Washer	Models starting 3/23/04
2	C001238	Cylinder Bolt Shroud	Models starting 3/23/04
3	N/A	Bolt	Models through 3/23/04
	C001093	Screw	Models starting 3/23/04 and continuing through 7/1/06
	C001294	Screw	Models starting 7/1/06
4	C000455P	Cylinder Assembly Kit	Models CP040PHN1, CP040PHQ1, CP040PHX2, CPC40H, IP040PHN1, IP040PHN2, IP040PHQ1, IP040PHX2, IPH40H, JP040PHN1 and JP040PHQ1
	C000812P	Cylinder Assembly Kit	Models CP040PMN1, CP040PMQ1, CP040PMX2, CPC40M, IP040PMN1, IP040PMQ1, IP040PMX2, IPH40M and IPH180
	C000792P	Cylinder Assembly Kit	Models CP060PMN1, CP060PMQ1, CP060PMX2, CPC60M, IP060PMN1, IP060PMN2, IP060PMQ1, IP060PMX2, IPH60M, IPH270 and JP060PMQ1; Includes lifter rod
	C000037P	Cylinder Assembly Kit	Models CP060PHN1, CP060PHN2, CP060PHQ1, CP060PHQ2, CP060PHX1, CP060PHX2, CPC60H, IP060PHN1, IP060PHN2, IP060PHQ1, IP060PHQ2, IP060PHX2, IPH60H, JP060PHN1, JP060PHN2 and JP060PHQ1; Includes lifter rod
5	F431011	Nut	Models CP060PHN1, CP060PHN2, CP060PHQ1, CP060PHQ2, CP060PHX1, CP060PHX2, CP060PMN1, CP060PMQ1, CP060PMX2, CPC60H, CPC60M, IP060PHN1, IP060PHN2, IP060PHQ1, IP060PHQ2, IP060PHX2, IP060PMN1, IP060PMN2, IP060PMQ1, IP060PMX2, IPH60H, IPH60M, IPH270 and JP060PHQ1 starting 3/23/04
6	F0431159-00	Washer	Models CP060PHN1, CP060PHN2, CP060PHQ1, CP060PHQ2, CP060PHX1, CP060PHX2, CP060PMN1, CP060PMQ1, CP060PMX2, CPC60H, CPC60M, IP060PHN1, IP060PHN2, IP060PHQ1, IP060PHQ2, IP060PHX2, IP060PMN1, IP060PMN2, IP060PMQ1, IP060PMX2, IPH60H, IPH60M and IPH270 starting 3/23/04
7	C001327	Cylinder Lifter Rod	Models CP060PHN1, CP060PHN2, CP060PHQ1, CP060PHQ2, CP060PHX1, CP060PHX2, CP060PMN1, CP060PMQ1, CP060PMX2, CPC60H, CPC60M, IP060PHN1, IP060PHN2, IP060PHQ1, IP060PHQ2, IP060PHX2, IP060PMN1, IP060PMN2, IP060PMQ1, IP060PMX2, IPH60H, IPH60M, IPH270 and JP060PHQ1 starting 3/23/04

N/A = Part no longer available

© Copyright, Alliance Laundry Systems LLC – DO NOT COPY or TRANSMIT

Single Cup Dispenser Assembly

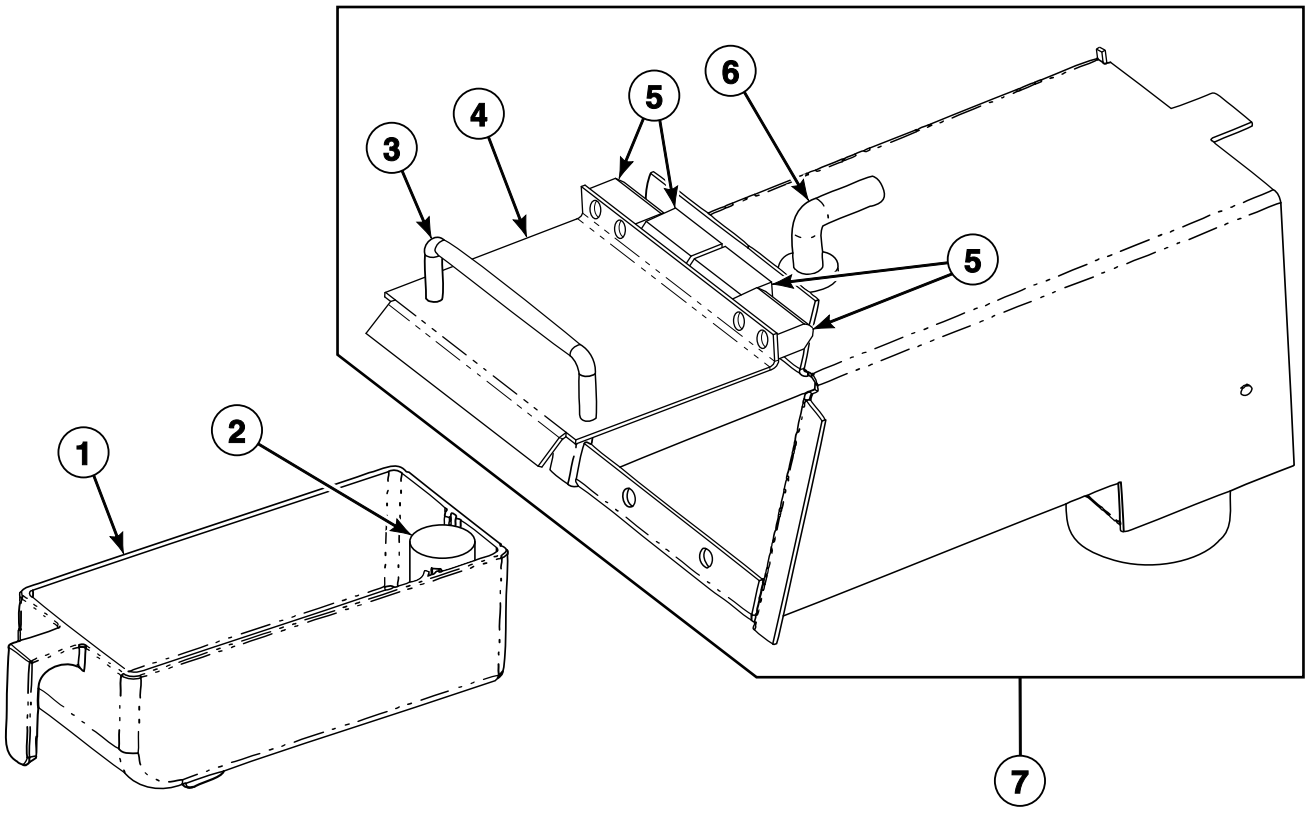

PHM2773P_C002874

© Copyright, Alliance Laundry Systems LLC – DO NOT COPY or TRANSMIT

Single Cup Dispenser Assembly

REF	PART NO.	DESCRIPTION	COMMENTS
	F430920	Screw	4 required for hinges to cover and 4 required for hinges to control panel for models through 3/23/04; 2 required for dispenser cover to handle for models starting 3/23/04
	C001148	Screw	4 required for hinges to cover; 4 required for hinges to control panel; Models starting 3/23/04
	F430909	Screw	2 required for dispenser cover to handle; Models through 3/23/04
	F430925	Screw	2 required for dispenser to control panel
	N/A	Nut	2 required for dispenser to control panel
	F200201	Hose Clamp	2 required for dispenser hose
	C000552	Hose	Flush hose for supply dispenser
1	C000052	Supply Dispenser Cup	23 ounce
2	C001007	Siphon Tube	
3	C001788	Dispenser Door Handle	
4	C000605	Single Front Dispenser Cover	
5	N/A	Lift-Off Hinge	Nylon; Models through 3/23/04
	C001787	Hinge	Nylon; Black; Models starting 3/23/04
6	C001017	Front Supply Dispenser Nozzle	
7	C000220	Single Dispenser Assembly	1 cup

N/A = Part no longer available

© Copyright, Alliance Laundry Systems LLC – DO NOT COPY or TRANSMIT

5 Cup Dispenser Assembly

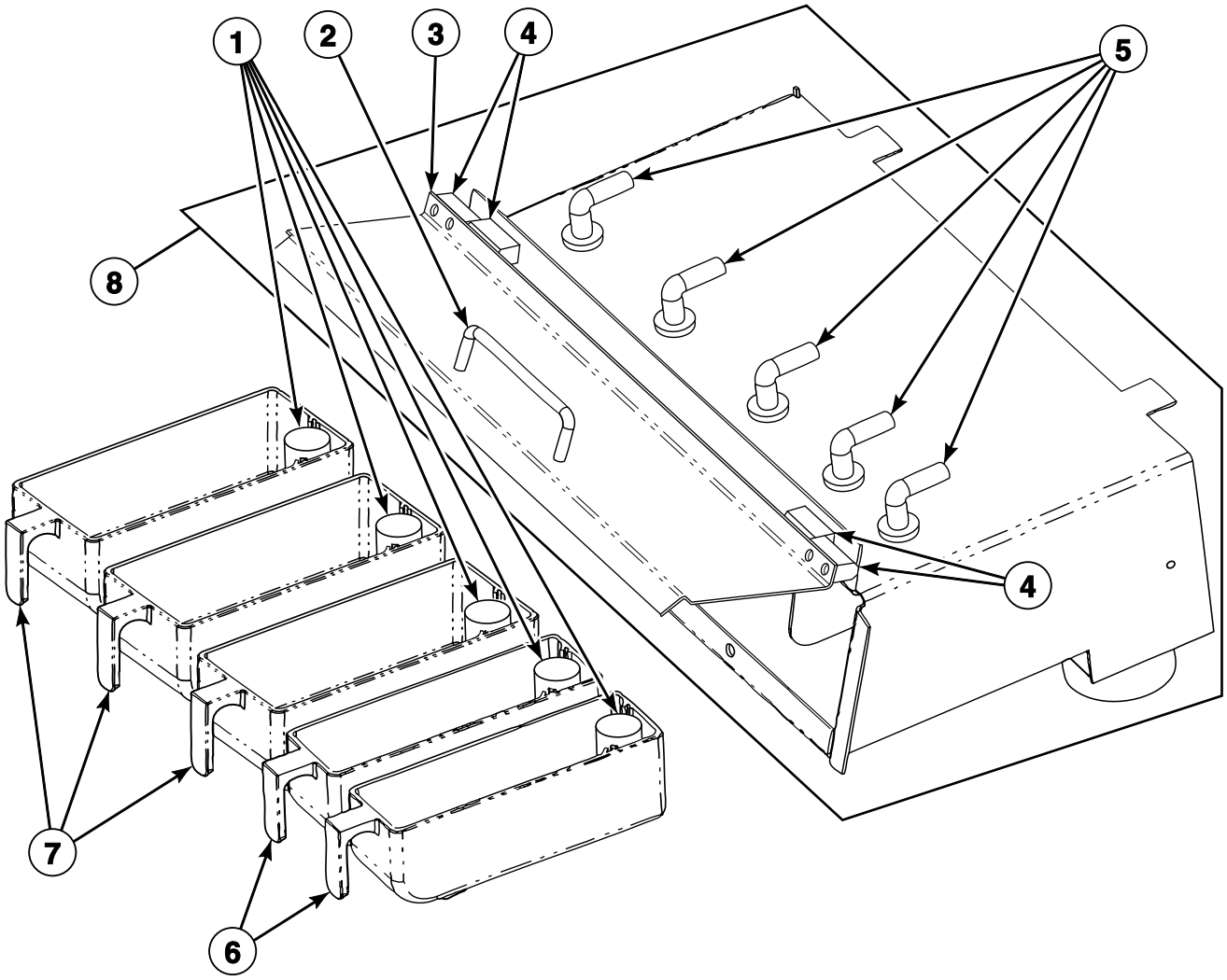

PHM2774P_C002874

© Copyright, Alliance Laundry Systems LLC – DO NOT COPY or TRANSMIT

5 Cup Dispenser Assembly

REF	PART NO.	DESCRIPTION	COMMENTS
	F430920	Screw	4 required for hinges to cover and 4 required for hinges to control panel for models through 3/23/04; 2 required for dispenser cover to handle for models starting 3/23/04
	C001148	Screw	4 required for hinges to cover; 4 required for hinges to control panel; Models starting 3/23/04
	F430909	Screw	2 required for dispenser cover to handle; Models through 3/23/04
	F430925	Screw	2 required for dispenser to control panel
	N/A	Nut	2 required for dispenser to control panel
	36801	Hose Clamp	12 required for 5 cup supply dispenser for models through 3/23/04; 7 required for 5 cup supply dispenser for models starting 3/23/04
	C001004	Spring Hose Clamp	5 required for 5 cup supply dispenser; Models starting 3/23/04
	F200201	Hose Clamp	2 required for dispenser hose
	C000552	Hose	Flush hose for supply dispenser cups
1	C001007	Siphon Tube	
2	C001788	Dispenser Door Handle	
3	C000606	Front Cover	5 compartment
4	N/A	Lift-Off Hinge	Nylon; Models through 3/23/04
	C001787	Hinge	Nylon; Black; Models starting 3/23/04
5	C001017	Front Supply Dispenser Nozzle	
6	C000053	Supply Dispenser Cup	
7	C000052	Supply Dispenser Cup	
8	C000107	Dispenser Assembly	5 compartment

N/A = Part no longer available

© Copyright, Alliance Laundry Systems LLC – DO NOT COPY or TRANSMIT

Door Assembly - Models through 2/9/09 (Drawing 1 of 2)

Models CP060PHN1, CP060PHQ1, CP060PMN1, CP060PMQ1, CPC60H, CPC60M,
IP060PHN1, IP060PHQ1, IP060PMN1, IP060PMQ1, IPH60H, IPH60M, IPH270,
JP060PHN1, JP060PHQ1 and JP060PMQ1

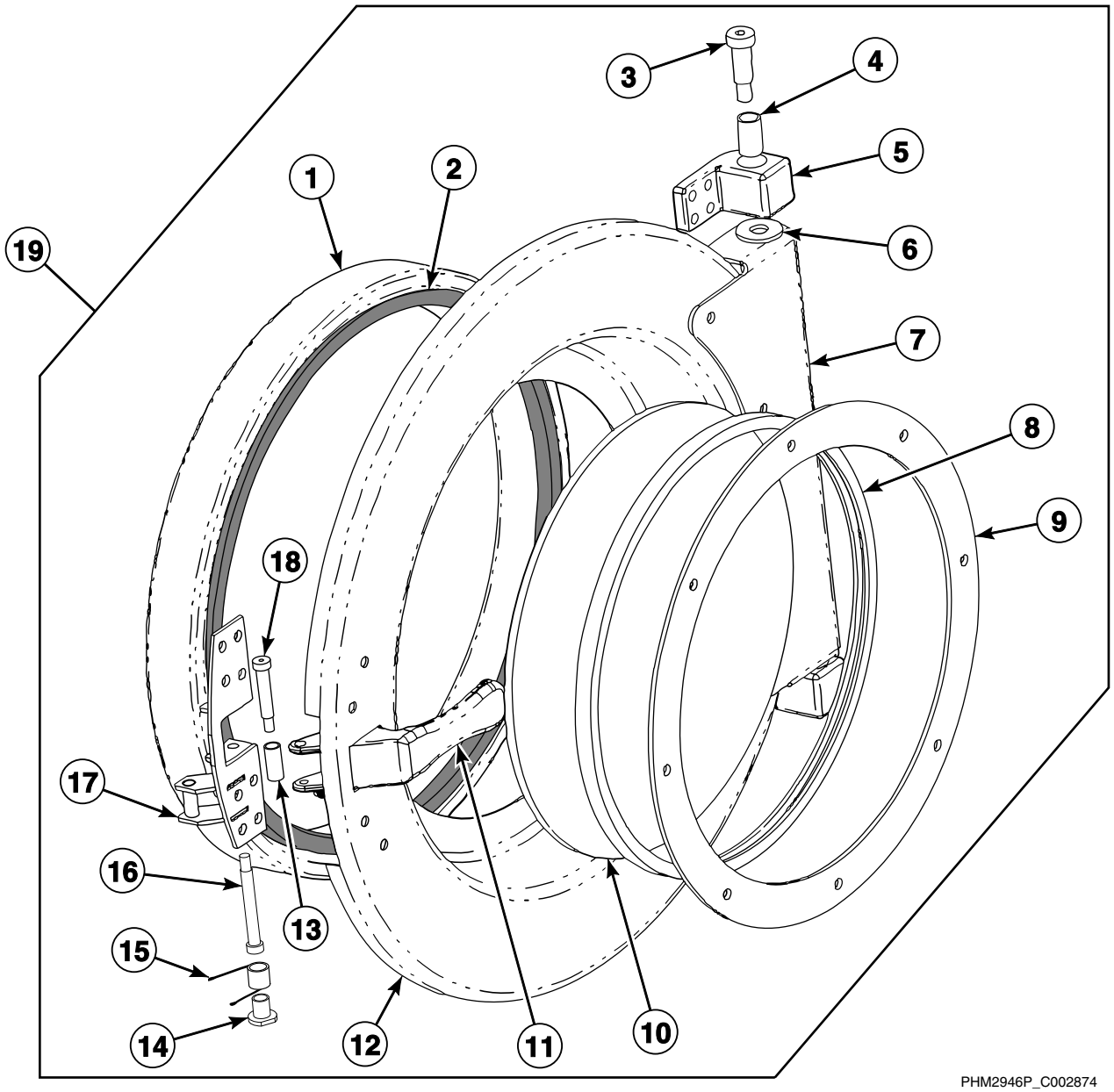

PHM2946P_C002874

© Copyright, Alliance Laundry Systems LLC – DO NOT COPY or TRANSMIT

Door Assembly - Models through 2/9/09 (Drawing 1 of 2)

REF	PART NO.	DESCRIPTION	COMMENTS
	C000559	Bolt	8 required for door hinge block to shell front
	C000574	Nut	8 required for door hinge block to shell front
	803017	Nut	2 required for door hinge block to hinge
	C000561	Bolt	5 required for door hinge to door; 4 required for door handle hinge to door for models through 3/23/04; 3 required for door handle hinge to door for models starting 3/23/04
	C000560	Nut	5 required for door hinge to door; 4 required for door handle hinge to door
	F8549401	Nut	8 required for door glass retainer to door
	C000601	Stud	8 required for door glass retainer to door
	F431024	Nut	1 required for door handle to door handle hinge
	C001236	Nut	1 required for door handle to door handle bushing
	C001546	Door Bumper	2 required; Models starting 3/23/04
	C001032	Screw	2 required for door bumper; Models starting 3/23/04
1	C003285	Door Gasket	
2	F8513501	Shell Front Gasket Kit	
3	F8549301	Bolt	
4	C000176	Door Hinge Bushing	
5	C000175	Hinge Block	
6	C000177	Washer	
7	C000604	Door Hinge	
8	C000190	Door Glass Gasket	
9	C000603	Door Glass Retainer	
10	C000191	Door Glass	
11	C001679P	Door Handle	
12	C002726	Door Assembly	
13	C000181	Door Handle Bushing	
14	C000192	Door Handle Spring Bushing	
15	C001786	Door Handle Torsion Spring	
16	C001785	Bolt	
17	C000470	Door Handle Hinge Weldment	
18	C000180	Bolt	
19	C000077	Door Assembly	Includes items 1-18

© Copyright, Alliance Laundry Systems LLC – DO NOT COPY or TRANSMIT

Door Assembly - Models through 2/9/09 (Drawing 2 of 2)

Models CP040PHN1, CP040PHQ1, CP040PMN1, CP040PMQ1, CPC40H, CPC40M, IP040PHN1, IP040PHQ1, IP040PMN1, IP040PMQ1, IPH40H, IPH40M, IPH180, JP040PHN1 and JP040PHQ1

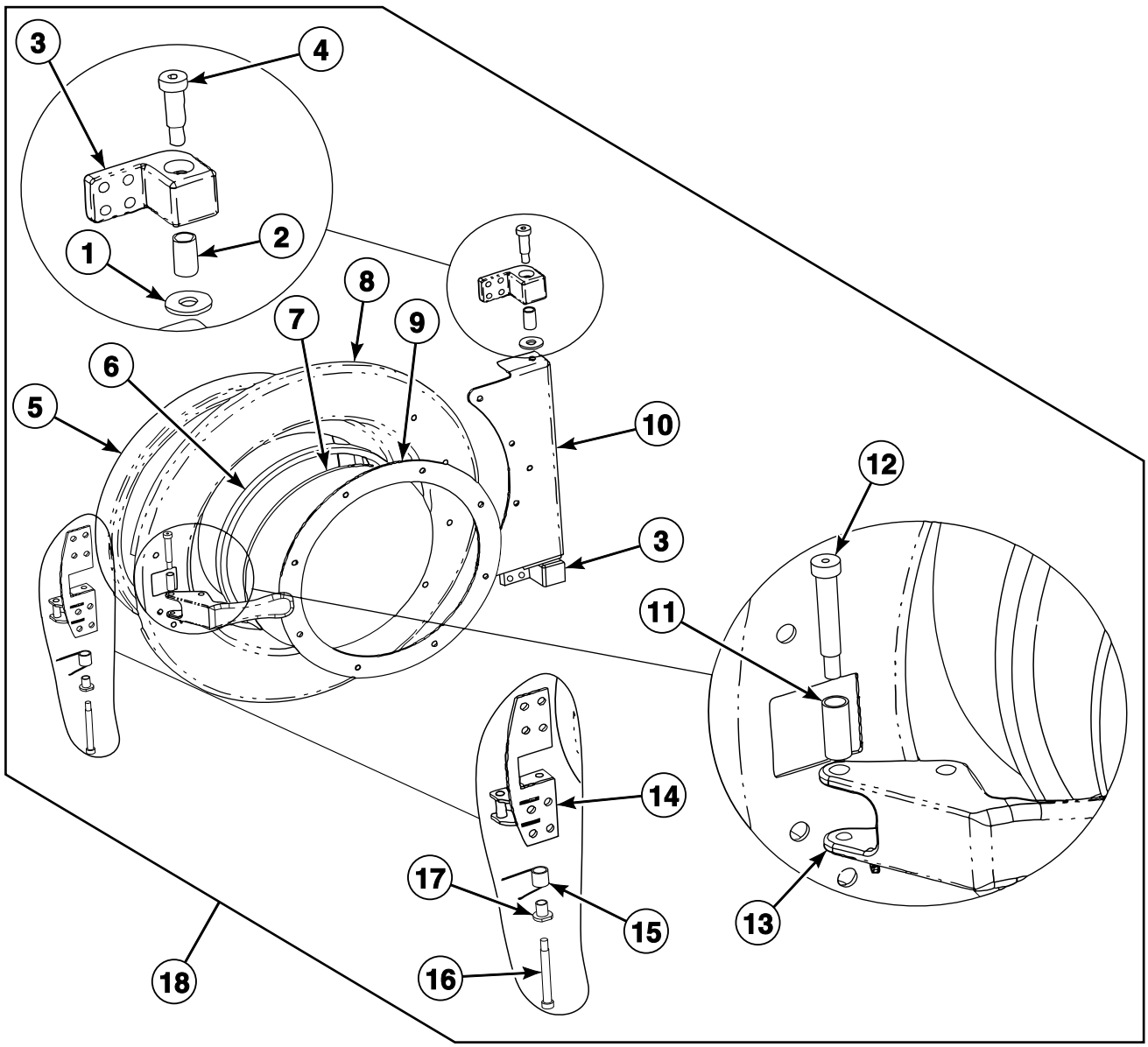

PHM2775P_C002874

© Copyright, Alliance Laundry Systems LLC – DO NOT COPY or TRANSMIT

Door Assembly - Models through 2/9/09 (Drawing 2 of 2)

REF	PART NO.	DESCRIPTION	COMMENTS
	C000559	Bolt	8 required for door hinge block to shell front
	C000574	Nut	8 required for door hinge block to shell front
	803017	Nut	2 required for door hinge block to hinge
	C000561	Bolt	5 required for door hinge to door; 4 required for door handle hinge to door for models through 3/23/04; 3 required for door handle hinge to door for models starting 3/23/04
	C000560	Nut	5 required for door hinge to door; 4 required for door handle hinge to door
	F8549401	Nut	8 required for door glass retainer to door
	C000601	Stud	8 required for door glass retainer to door
	F431024	Nut	1 required for door handle to door handle hinge
	C001236	Nut	1 required for door handle to door handle bushing
	C001546	Door Bumper	2 required; Models starting 3/23/04
	C001032	Screw	2 required for door bumper; Models starting 3/23/04
1	C000177	Washer	
2	C000176	Door Hinge Bushing	
3	C000175	Hinge Block	
4	F8549301	Bolt	
5	C000521P	Door Gasket	
6	C000522	Door Glass Gasket	
7	C000520P	Door Glass	
8	C000523	Door	
9	C000519	Door Glass Retainer	
10	C000681	Door Hinge	
11	C000181	Door Handle Bushing	
12	C000180	Bolt	
13	C001679P	Door Handle	
14	C000470	Door Handle Hinge Weldment	
15	C001786	Door Handle Torsion Spring	
16	C001785	Bolt	
17	C000192	Door Handle Spring Bushing	
18	C000524	Door Assembly	Models starting 3/23/04; Includes items 1-17

© Copyright, Alliance Laundry Systems LLC – DO NOT COPY or TRANSMIT

Door Assembly - Models starting 2/10/09 (Drawing 1 of 2)

Models CP060PHN1, CP060PHN2, CP060PHQ1, CP060PHQ2, CP060PHX1, CP060PHX2, CP060PMN1, CP060PMQ1, CP060PMX2, CPC60H, CPC60M, IP060PHN1, IP060PHN2, IP060PHQ1, IP060PHQ2, IP060PHX2, IP060PMN1, IP060PMN2, IP060PMQ1, IP060PMX2, IPH60H, IPH60M, IPH270, JP060PHN1, JP060PHN2, JP060PHQ1 and JP060PMQ1

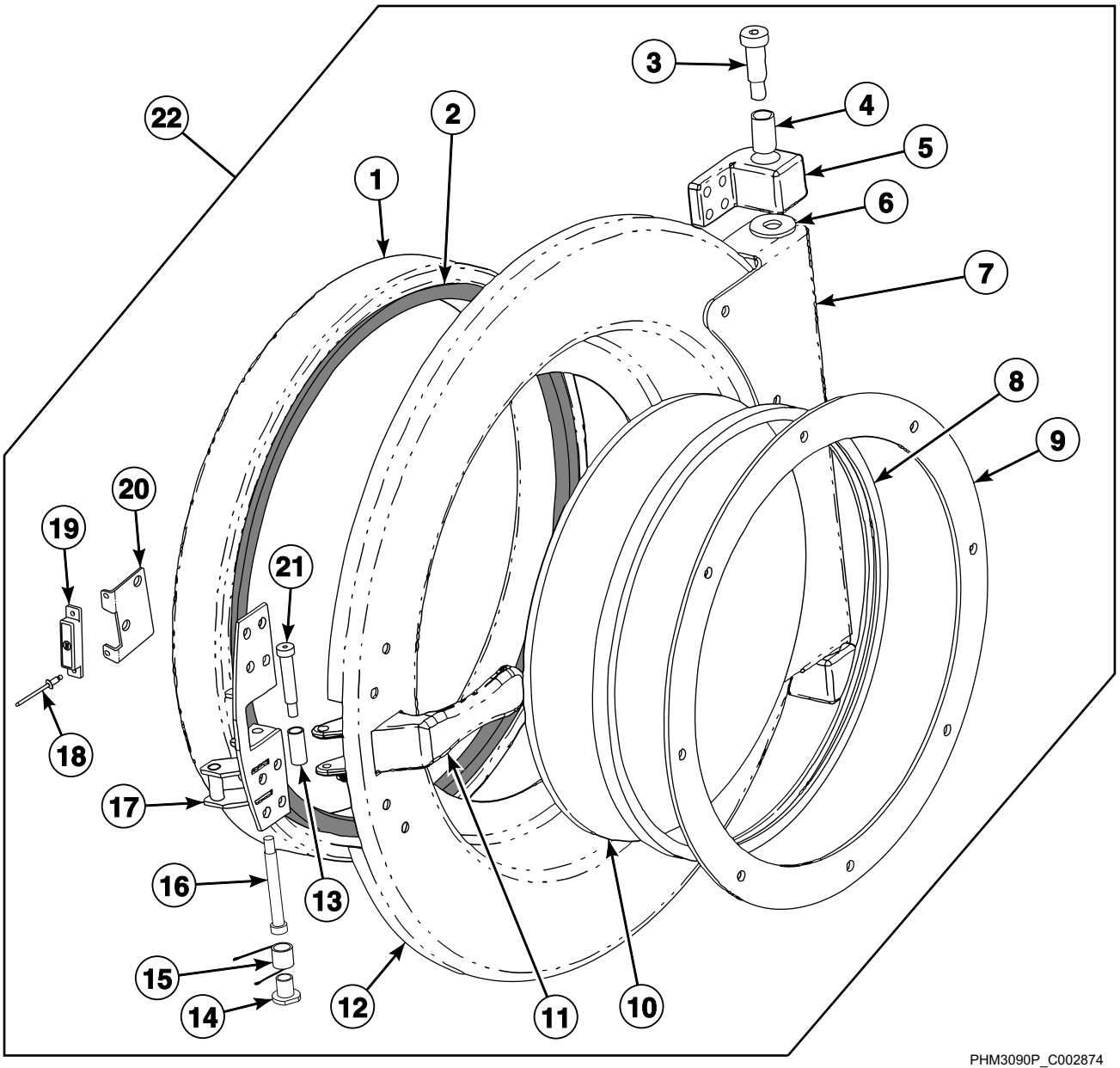

PHM3090P_C002874

© Copyright, Alliance Laundry Systems LLC – DO NOT COPY or TRANSMIT

Door Assembly - Models starting 2/10/09 (Drawing 1 of 2)

REF	PART NO.	DESCRIPTION	COMMENTS
	C000559	Bolt	8 required for door hinge block to shell front
	C000574	Nut	8 required for door hinge block to shell front
	803017	Nut	2 required for door hinge block to hinge
	C000561	Bolt	5 required for door hinge to door; 3 required for door handle hinge to door
	C000560	Nut	5 required for door hinge to door; 4 required for door handle hinge to door
	F8549401	Nut	8 required for door glass retainer to door
	C000601	Stud	8 required for door glass retainer to door
	F431024	Nut	1 required for door handle to door handle hinge
	C001236	Nut	1 required for door handle to door handle bushing
	C001546	Door Bumper	2 required; Models starting 3/23/04
	C001032	Screw	2 required for door bumper; Models starting 3/23/04
1	C003285	Door Gasket	
2	F8513501	Shell Front Gasket Kit	
3	F8549301	Bolt	
4	C000176	Door Hinge Bushing	
5	C000175	Hinge Block	
6	C000177	Washer	
7	C000604	Door Hinge	
8	C000190	Door Glass Gasket	
9	C000603	Door Glass Retainer	
10	C000191	Door Glass	
11	C001679P	Door Handle	
12	C002726	Door Assembly	
13	C000181	Door Handle Bushing	
14	C000192	Door Handle Spring Bushing	
15	C001786	Door Handle Torsion Spring	
16	C001785	Bolt	
17	C000470	Door Handle Hinge Weldment	
18	F431223	Pop Rivet	
19	F8390801	Magnet	
20	C002994	Door Magnet Mounting Bracket	
21	C000180	Bolt	
22	C000077	Door Assembly	Includes items 1-21

© Copyright, Alliance Laundry Systems LLC – DO NOT COPY or TRANSMIT

Door Assembly - Models starting 2/10/09 (Drawing 2 of 2)

Models CP040PHN1, CP040PHQ1, CP040PHX2, CP040PMN1, CP040PMQ1, CP040PMX2, CPC40H, CPC40M, IP040PHN1, IP040PHN2, IP040PHQ1, IP040PHX2, IP040PMN1, IP040PMQ1, IP040PMX2, IPH40H, IPH40M, IPH180, JP040PHN1 and JP040PHQ1

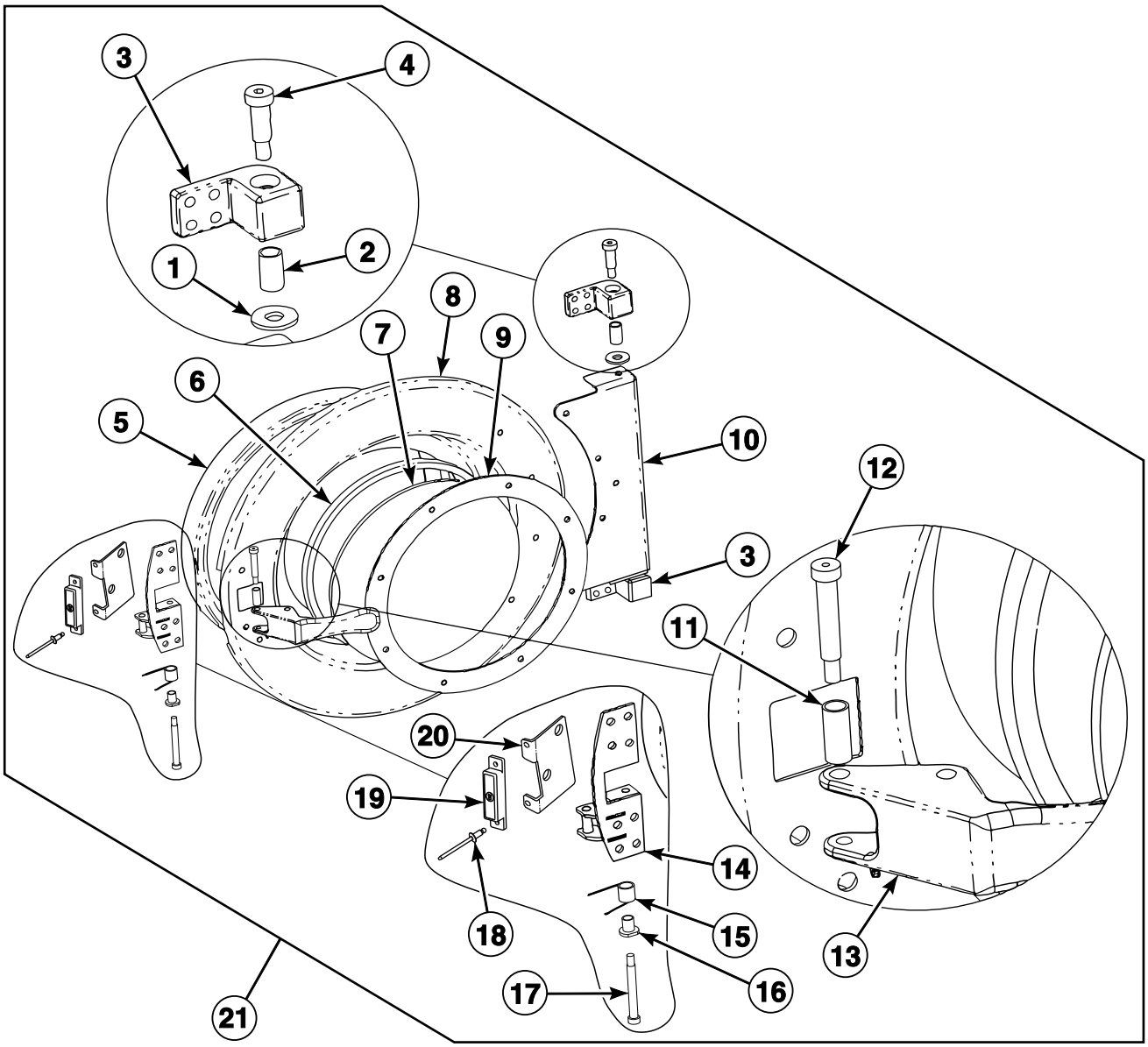

PHM3092P_C002874

© Copyright, Alliance Laundry Systems LLC – DO NOT COPY or TRANSMIT

Door Assembly - Models starting 2/10/09 (Drawing 2 of 2)

REF	PART NO.	DESCRIPTION	COMMENTS
	C000559	Bolt	8 required for door hinge block to shell front
	C000574	Nut	8 required for door hinge block to shell front
	803017	Nut	2 required for door hinge block to hinge
	C000561	Bolt	5 required for door hinge to door; 3 required for door handle hinge to door
	C000560	Nut	5 required for door hinge to door; 4 required for door handle hinge to door
	F8549401	Nut	8 required for door glass retainer to door
	C000601	Stud	8 required for door glass retainer to door
	F431024	Nut	1 required for door handle to door handle hinge
	C001236	Nut	1 required for door handle to door handle bushing
	C001546	Door Bumper	2 required; Models starting 3/23/04
	C001032	Screw	2 required for door bumper; Models starting 3/23/04
1	C000177	Washer	
2	C000176	Door Hinge Bushing	
3	C000175	Hinge Block	
4	F8549301	Bolt	
5	C000521P	Door Gasket	
6	C000522	Door Glass Gasket	
7	C000520P	Door Glass	
8	C000523	Door	
9	C000519	Door Glass Retainer	
10	C000681	Door Hinge	
11	C000181	Door Handle Bushing	
12	C000180	Bolt	
13	C001679P	Door Handle	
14	C000470	Door Handle Hinge Weldment	
15	C001786	Door Handle Torsion Spring	
16	C000192	Door Handle Spring Bushing	
17	C001785	Bolt	
18	F431223	Pop Rivet	
19	F8390801	Magnet	
20	C002994	Door Magnet Mounting Bracket	
21	C000524	Door Assembly	Includes items 1-20

© Copyright, Alliance Laundry Systems LLC – DO NOT COPY or TRANSMIT

Door Lock Assembly

Models Through Serial No. 0902007001

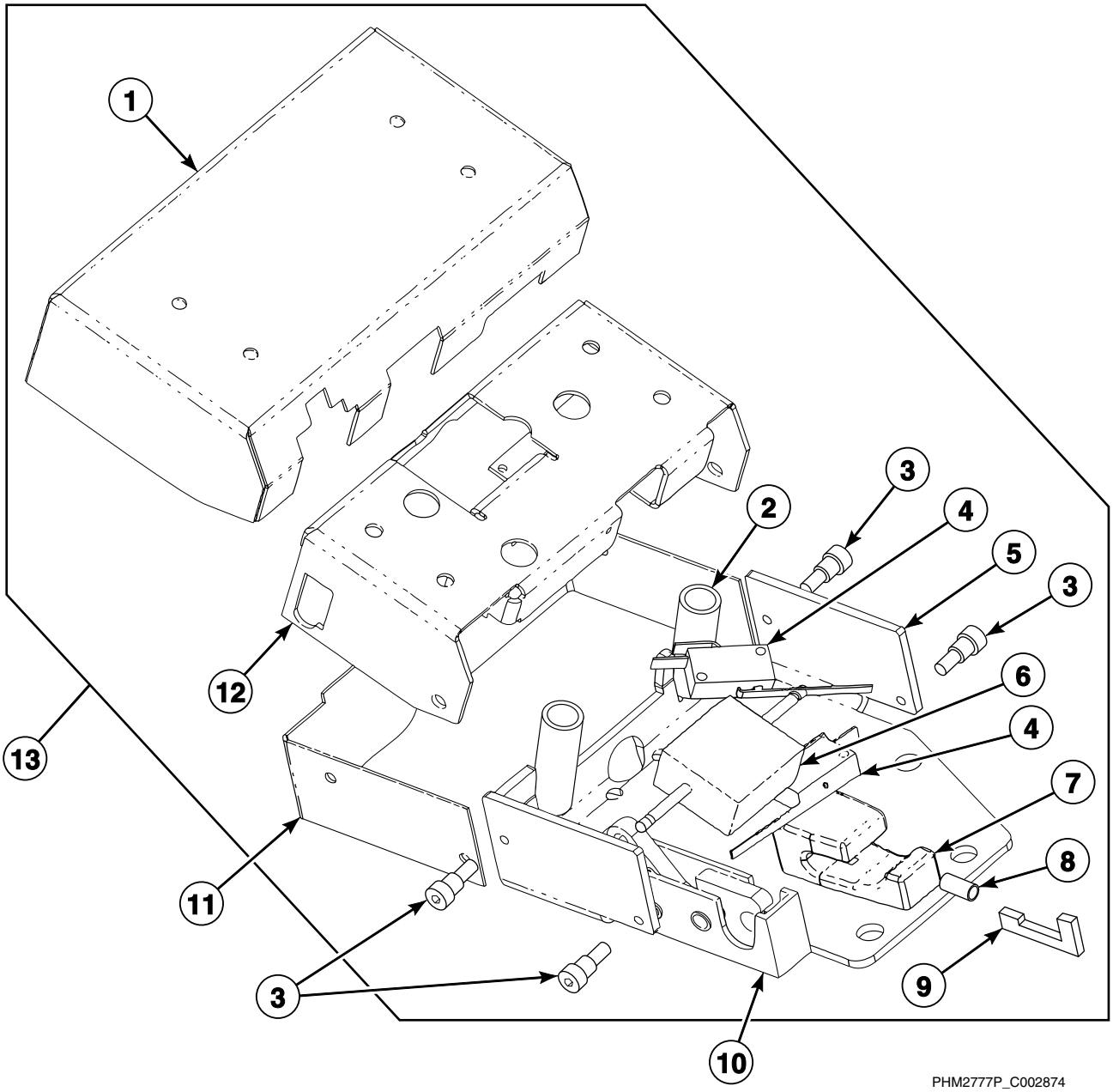

© Copyright, Alliance Laundry Systems LLC – DO NOT COPY or TRANSMIT

Door Lock Assembly

REF	PART NO.	DESCRIPTION	COMMENTS
	81398	Screw	4 required for door lock cover to solenoid bracket; Models starting 3/23/04
	C000613	Screw	2 required for door solenoid bracket to door lock plate; Models through 3/23/04
	C000614	Screw	2 required for door lock switch to door lock plate; 2 required for door lock switch to door lock solenoid bracket
	C000578	Nut	2 required for door lock switch to door lock plate; 2 required for door lock switch to door lock solenoid bracket
	C000561	Bolt	4 required for door lock to shell front
	C000574	Nut	4 required for door lock to shell front
	C000567	Screw	2 required for door latch to door lock plate
	C000571	Washer	2 required for door latch to door lock plate; Models starting 3/23/04
	C000572	Screw	2 required for door lock solenoid to bracket
	C000612	Screw	3 required for door lock catch to door lock plate
	C000430	Bolt	4 required for door solenoid bracket to door lock plate for models starting 3/23/04; 4 required for door lock cover to door lock plate for models through 3/23/04
	C000576	Nut	2 required for door lock cover to door lock plate
	C000867P	Door Lock Harness	
	C003291	Jump Wire	
1	C000688	Door Lock Cover	
2	C000431	Spring	
3	C000430	Bolt	
4	C000278	Door Lock Microswitch	
5	C000684	Door Lock Plate	
6	F8654101	Door Lock Solenoid	
7	C000185	Door Lock Catch	
8	C000276	Door Lock Slide Spring	
9	C000271	Door Lock Switch Slide	
10	N/A	Door Latch	Models through 3/23/04
	C001244	Door Latch	Models starting 3/23/04
11	C000687	Door Lock Spring Cover	
12	C003022	Door Lock Solenoid Bracket	
13	C002996M	Door Lock Kit	
	N/A	Door Lock Assembly	Includes items 1-12; Models through 7/14/11 with C001036P Door Lock Assembly **MUST** order C002996M Door Lock Kit

N/A = Part no longer available

© Copyright, Alliance Laundry Systems LLC – DO NOT COPY or TRANSMIT

Door Lock Assembly with Magnetic Sensor

Models Starting Serial No. 0902007002

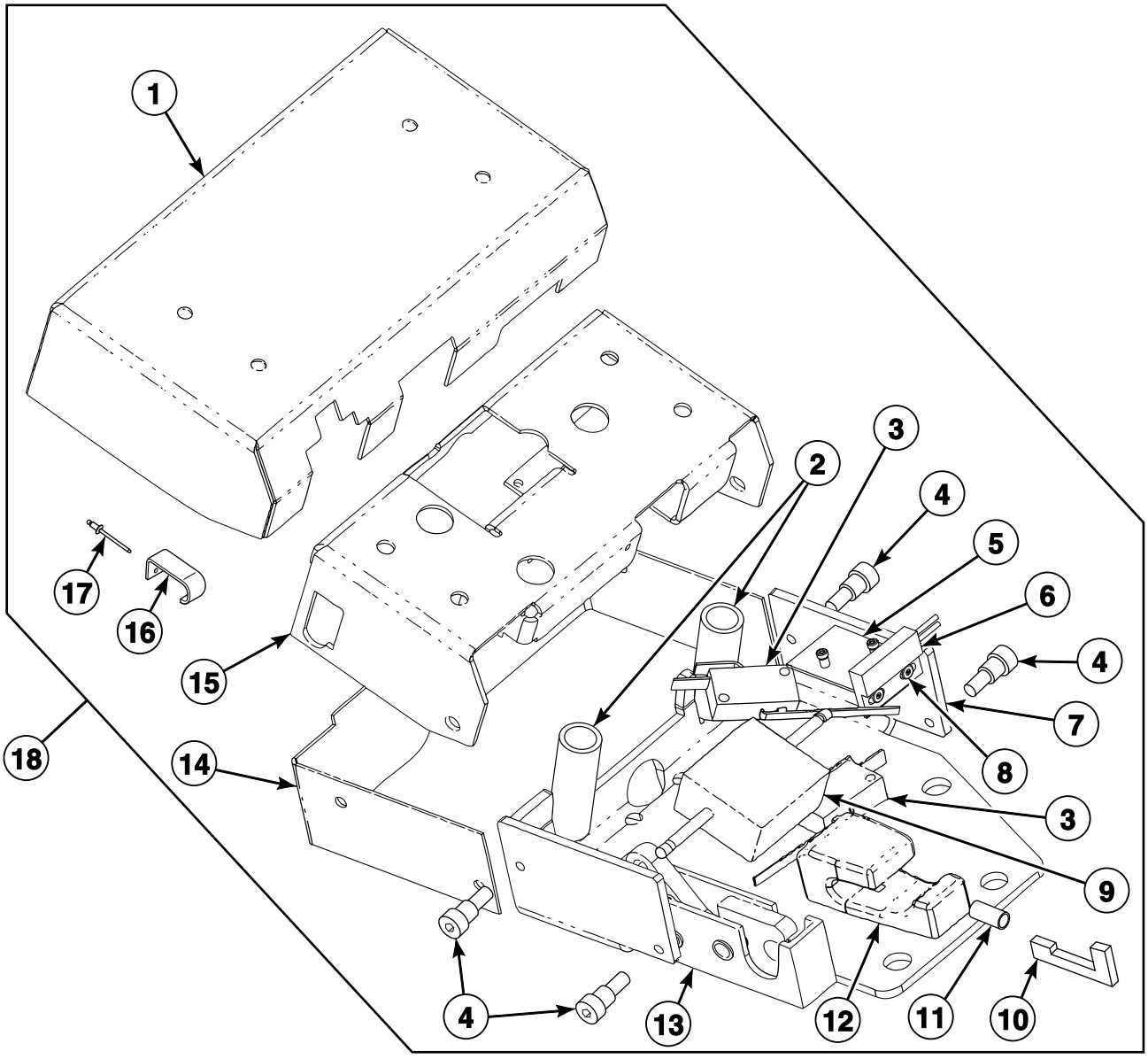

PHM3149P_C002874

© Copyright, Alliance Laundry Systems LLC – DO NOT COPY or TRANSMIT

Door Lock Assembly with Magnetic Sensor

REF	PART NO.	DESCRIPTION	COMMENTS
	81398	Screw	4 required for door lock cover to solenoid bracket; Models starting 3/23/04
	C000613	Screw	2 required for door solenoid bracket to door lock plate; Models through 3/23/04
	C000614	Screw	2 required for door lock switch to door lock plate; 2 required for door lock switch to door lock solenoid bracket
	C000578	Nut	2 required for door lock switch to door lock plate; 2 required for door lock switch to door lock solenoid bracket
	C000561	Bolt	4 required for door lock to shell front
	C000574	Nut	4 required for door lock to shell front
	C000567	Screw	2 required for door latch to door lock plate
	C000571	Washer	2 required for door latch to door lock plate; Models starting 3/23/04
	C000572	Screw	2 required for door lock solenoid to bracket
	C000612	Screw	3 required for door lock catch to door lock plate
	C000430	Bolt	4 required for door solenoid bracket to door lock plate for models starting 3/23/04; 4 required for door lock cover to door lock plate for models through 3/23/04
	C000576	Nut	2 required for door lock cover to door lock plate
	C000867P	Door Lock Harness	
	C003291	Jump Wire	
1	C000688	Door Lock Cover	
2	C000431	Spring	
3	C000278	Door Lock Microswitch	
4	C000430	Bolt	
5	C002995	Magnetic Door Switch Bracket	
6	C003000	Reed Switch Assembly	
7	C000684	Door Lock Plate	
8	J1111905	Blind Rivet	
9	F8654101	Door Lock Solenoid	
10	C000271	Door Lock Switch Slide	
11	C000276	Door Lock Slide Spring	
12	C000185	Door Lock Catch	
13	N/A	Door Latch	Models through 3/23/04
	C001244	Door Latch	Models starting 3/23/04
14	C000687	Door Lock Spring Cover	
15	C003022	Door Lock Solenoid Bracket	
16	B12351001	Door Lock Spring	Models starting 12/13/10 through 5/12/11
17	F431215	Pop Rivet	Models starting 12/13/10 through 5/12/11
18	C002996M	Door Lock Kit	Includes items 1-17

N/A = Part no longer available

© Copyright, Alliance Laundry Systems LLC – DO NOT COPY or TRANSMIT

5 Cup Hot Plumbing Assembly

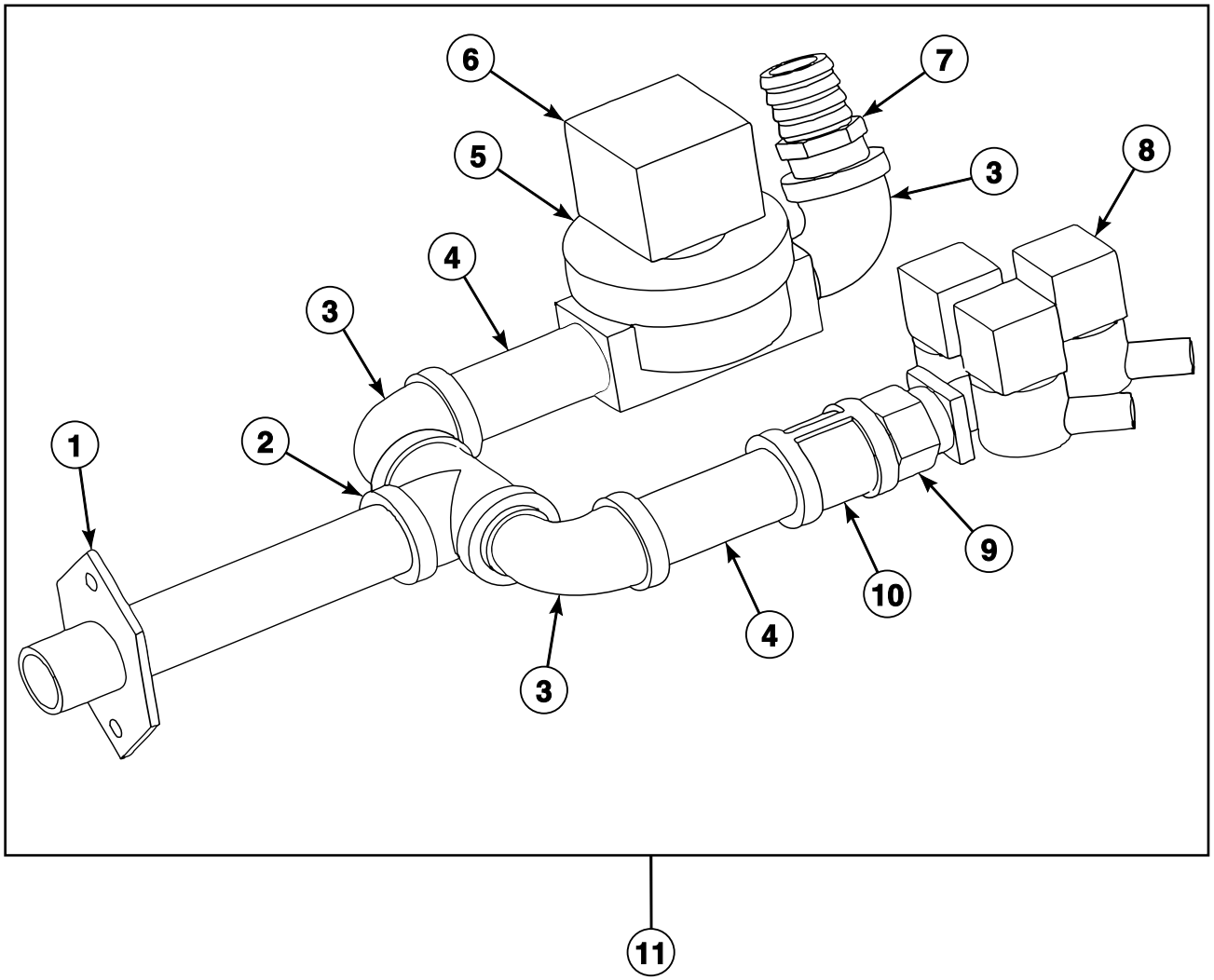

PHM2736P_C002874

© Copyright, Alliance Laundry Systems LLC – DO NOT COPY or TRANSMIT

5 Cup Hot Plumbing Assembly

REF	PART NO.	DESCRIPTION	COMMENTS
	C002610P	Inlet Valve Harness	
	C000567	Screw	2 required for hot manifold to valve panel; 4 required for vacuum breaker to valve panel
	F431024	Nut	2 required for drain valve to drain valve mounting bracket; 2 required for hot manifold to valve panel
	F430935	Screw	2 required for drain valve to drain valve mounting bracket
	C000585	Washer	2 required for drain valve to drain valve mounting bracket; Models through 3/23/04
	C000571	Washer	4 required for drain valve to drain valve mounting bracket; Models starting 3/23/04
	F200128P	Water Hose	Hot water valve to vacuum breaker
	F8514701	Coil	Use with F8322909 Steam Valve
	F8382301	DIN Valve Adapter Kit	Use with F8322909 Steam Valve
	F8379504	Valve Rebuild Kit	Use with F8322909 Steam Valve
1	C001366	Flange and Nipple Assembly	
2	F420403	Tee	
3	F420502	Street Elbow	
4	F420107	Nipple	
5	F380991P	Water Valve Repair Kit	3/4 inch; Use with F381700P Valve
	F8322909P	Valve	Replaces F381700P Valve; Includes F8322909 Steam Valve and F8514701 Coil
6	F380986P	DIN Coil	120 Volt
	F380987P	DIN Coil	240 Volt
7	F421951	Hose Barb	Brass
8	C000436P	Water Valve	
	G582P3	Diaphragm and Guide Kit	
9	C000424	Adapter	
10	C000420	Coupling	
11	C000426	Hot Plumbing Assembly	5 cup; Includes items 1-9

© Copyright, Alliance Laundry Systems LLC – DO NOT COPY or TRANSMIT

1 Cup Hot Plumbing Assembly

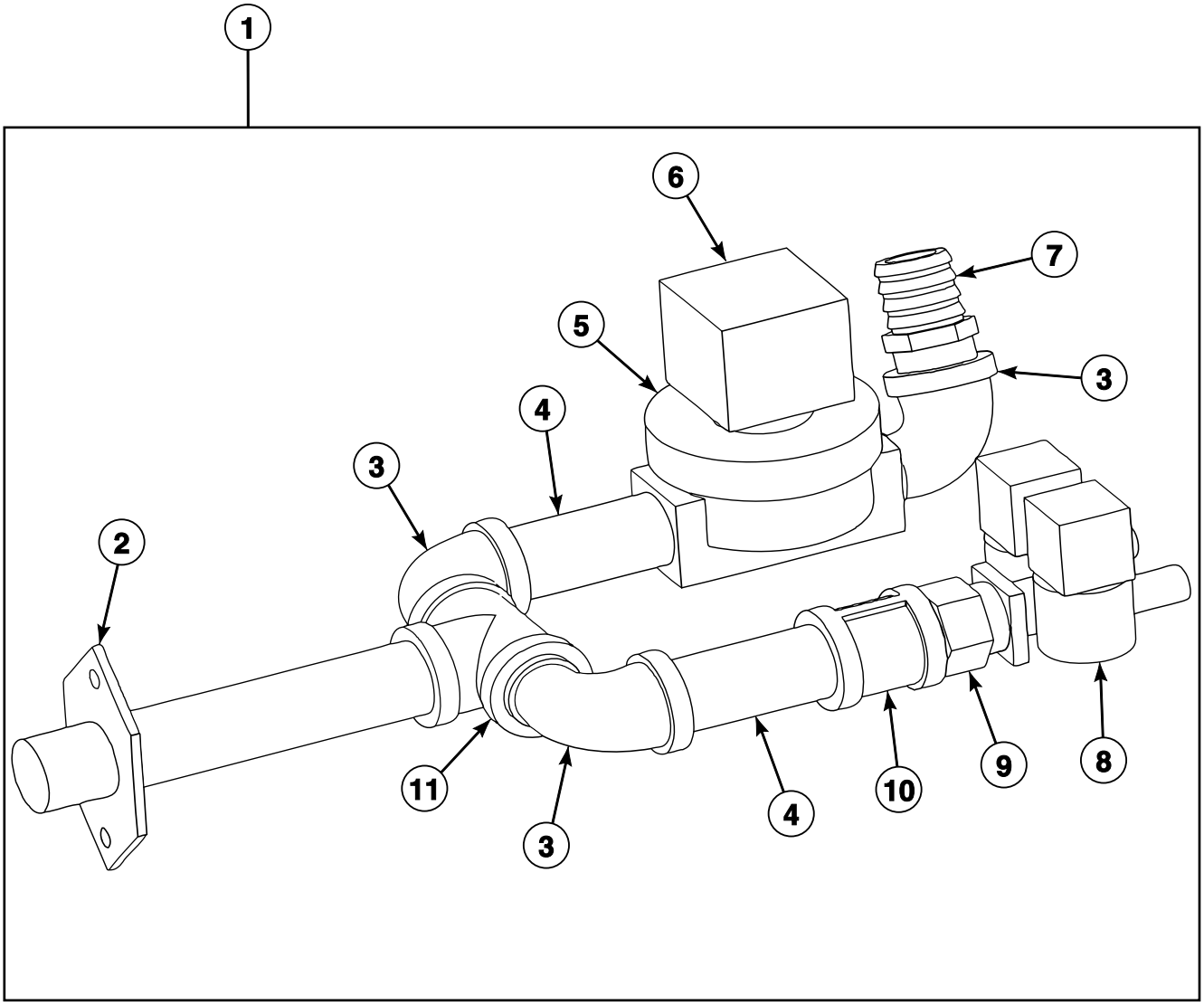

PHM2737P_C002874

© Copyright, Alliance Laundry Systems LLC – DO NOT COPY or TRANSMIT

1 Cup Hot Plumbing Assembly

REF	PART NO.	DESCRIPTION	COMMENTS
	C002608P	Inlet Valve Harness	
	C000567	Screw	2 required for hot manifold to valve panel; 4 required for vacuum breaker to valve panel
	F431024	Nut	2 required for hot manifold to valve panel; 2 required for drain valve to drain valve mounting bracket
	F430935	Screw	2 required for drain valve to drain valve mounting bracket
	C000585	Washer	2 required for drain valve to drain valve mounting bracket; Models through 3/23/04
	C000571	Washer	4 required for drain valve to drain valve mounting bracket; Models starting 3/23/04
	F200128P	Water Hose	Hot water valve to vacuum breaker
	F8514701	Coil	Use with F8322909 Steam Valve
	F8382301	DIN Valve Adapter Kit	Use with F8322909 Steam Valve
	F8379504	Valve Rebuild Kit	Use with F8322909 Steam Valve
1	C001664	Hot Plumbing Assembly	Includes items 2-10
2	C001366	Flange and Nipple Assembly	
3	F420502	Street Elbow	
4	F420107	Nipple	
5	F380991P	Water Valve Repair Kit	3/4 inch; Use with F381700P Valve
	F8322909P	Valve	Replaces F381700P Valve; Includes F8322909 Steam Valve and F8514701 Coil
6	F380986P	DIN Coil	120 Volt
	F380987P	DIN Coil	240 Volt
7	F421951	Hose Barb	Brass
8	C000716P	Valve	2-way
	G582P3	Diaphragm and Guide Kit	
9	C000424	Adapter	
10	C000420	Coupling	
11	F420403	Tee	

© Copyright, Alliance Laundry Systems LLC – DO NOT COPY or TRANSMIT

5 Cup Cold Plumbing Assembly

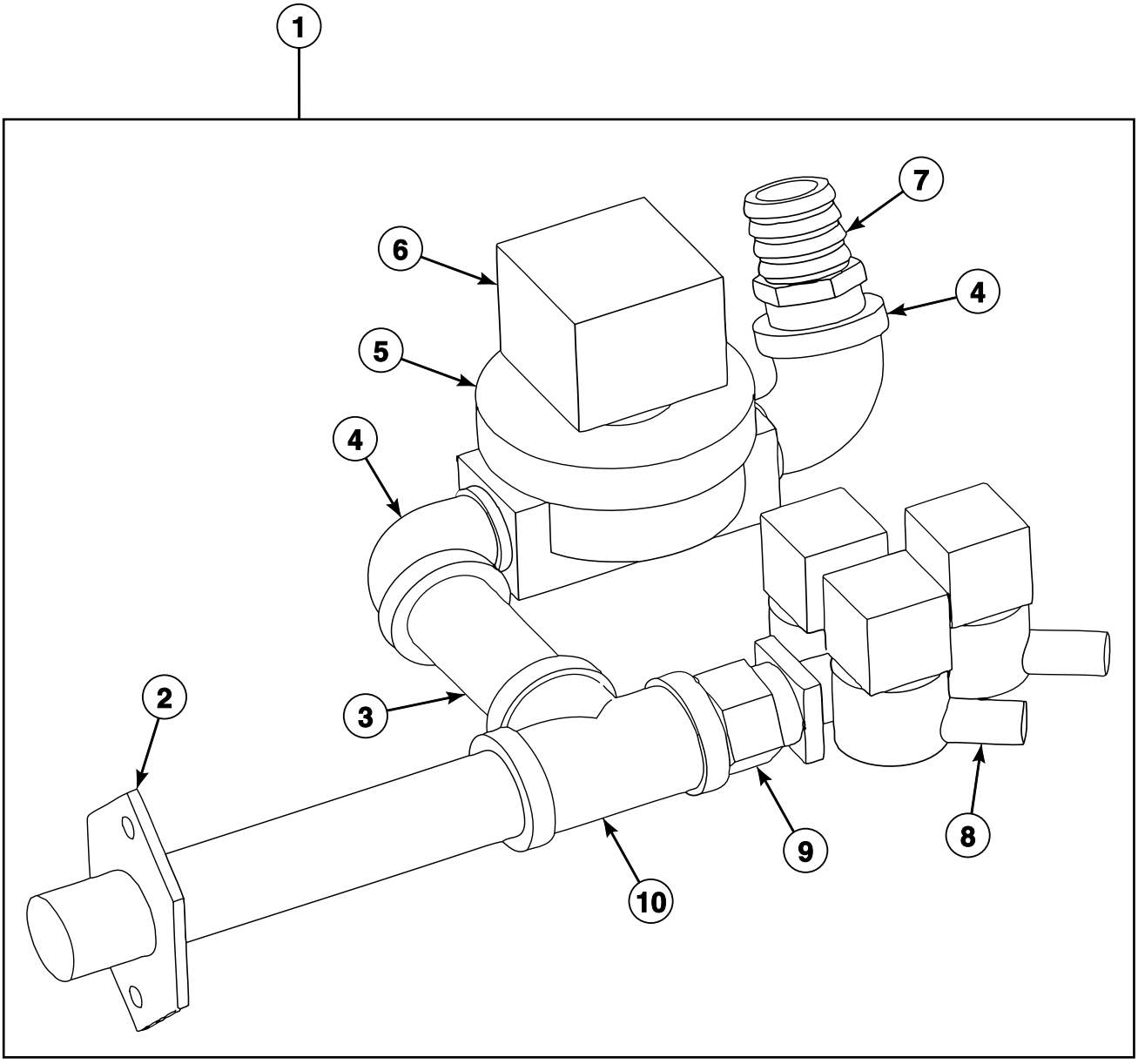

PHM2738P_C002874

© Copyright, Alliance Laundry Systems LLC – DO NOT COPY or TRANSMIT

5 Cup Cold Plumbing Assembly

REF	PART NO.	DESCRIPTION	COMMENTS
	C002611P	Inlet Valve Harness	
	C000567	Screw	2 required for cold manifold to valve panel; 4 required for vacuum breaker to valve panel
	F431024	Nut	2 required for drain valve to drain valve mounting bracket; 2 required for cold manifold to valve panel
	F430935	Screw	2 required for drain valve to drain valve mounting bracket
	C000585	Washer	2 required for drain valve to drain valve mounting bracket; Models through 3/23/04
	C000571	Washer	4 required for drain valve to drain valve mounting bracket; Models starting 3/23/04
	F200128P	Water Hose	Cold water valve to vacuum breaker
	F8514701	Coil	Use with F8322909 Steam Valve
	F8382301	DIN Valve Adapter Kit	Use with F8322909 Steam Valve
	F8379504	Valve Rebuild Kit	Use with F8322909 Steam Valve
1	C000425	Cold Plumbing Assembly	Includes items 2-9
2	C001366	Flange and Nipple Assembly	
3	F420107	Nipple	Galvanized
4	F420502	Street Elbow	Galvanized
5	F380991P	Water Valve Repair Kit	3/4 inch; Use with F381700P Valve
	F8322909P	Valve	Replaces F381700P Valve: Includes F8322909 Steam Valve and F8514701 Coil
6	F380986P	DIN Coil	120 Volt
	F380987P	DIN Coil	240 Volt
7	F421951	Hose Barb	Brass
8	C000436P	Water Valve	3-way
	G582P3	Diaphragm and Guide Kit	
9	C000424	Adapter	
10	F420403	Tee	Galvanized

© Copyright, Alliance Laundry Systems LLC – DO NOT COPY or TRANSMIT

1 Cup Cold Plumbing Assembly

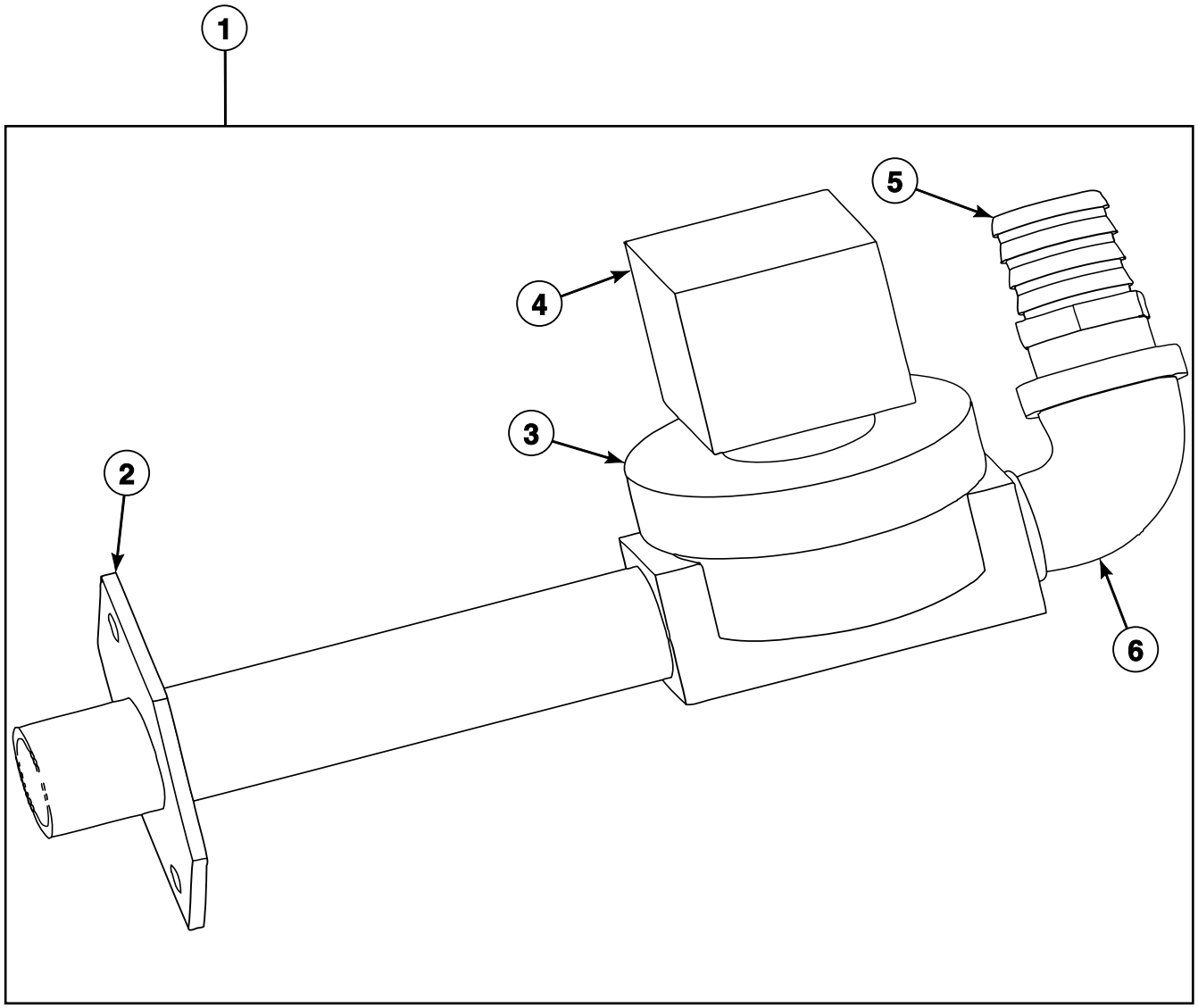

PHM2739P_C002874

© Copyright, Alliance Laundry Systems LLC – DO NOT COPY or TRANSMIT

1 Cup Cold Plumbing Assembly

REF	PART NO.	DESCRIPTION	COMMENTS
	C002608P	Inlet Valve Harness	
	C000567	Screw	2 required for cold manifold to valve panel; 4 required for vacuum breaker to valve panel
	F431024	Nut	2 required for drain valve to drain valve mounting bracket; 2 required for cold manifold to valve panel
	F430935	Screw	2 required for drain valve to drain valve mounting bracket
	C000585	Washer	2 required for drain valve to drain valve mounting bracket; Models through 3/23/04
	C000571	Washer	4 required for drain valve to drain valve mounting bracket; Models starting 3/23/04
	F200128P	Water Hose	Cold water valve to vacuum breaker
	F8514701	Coil	Use with F8322909 Steam Valve
	F8382301	DIN Valve Adapter Kit	Use with F8322909 Steam Valve
	F8379504	Valve Rebuild Kit	Use with F8322909 Steam Valve
1	C001106	Cold Plumbing Assembly	Includes items 2-5
2	C001366	Flange and Nipple Assembly	
3	F380991P	Water Valve Repair Kit	3/4 inch; Use with F381700P Valve
	F8322909P	Valve	Replaces F381700P Valve: Includes F8322909 Steam Valve and F8514701 Coil
4	F380986P	DIN Coil	120 Volt
	F380987P	DIN Coil	240 Volt
5	F421951	Hose Barb	
6	F420502	Street Elbow	Galvanized

© Copyright, Alliance Laundry Systems LLC – DO NOT COPY or TRANSMIT

Auxiliary Plumbing Assembly

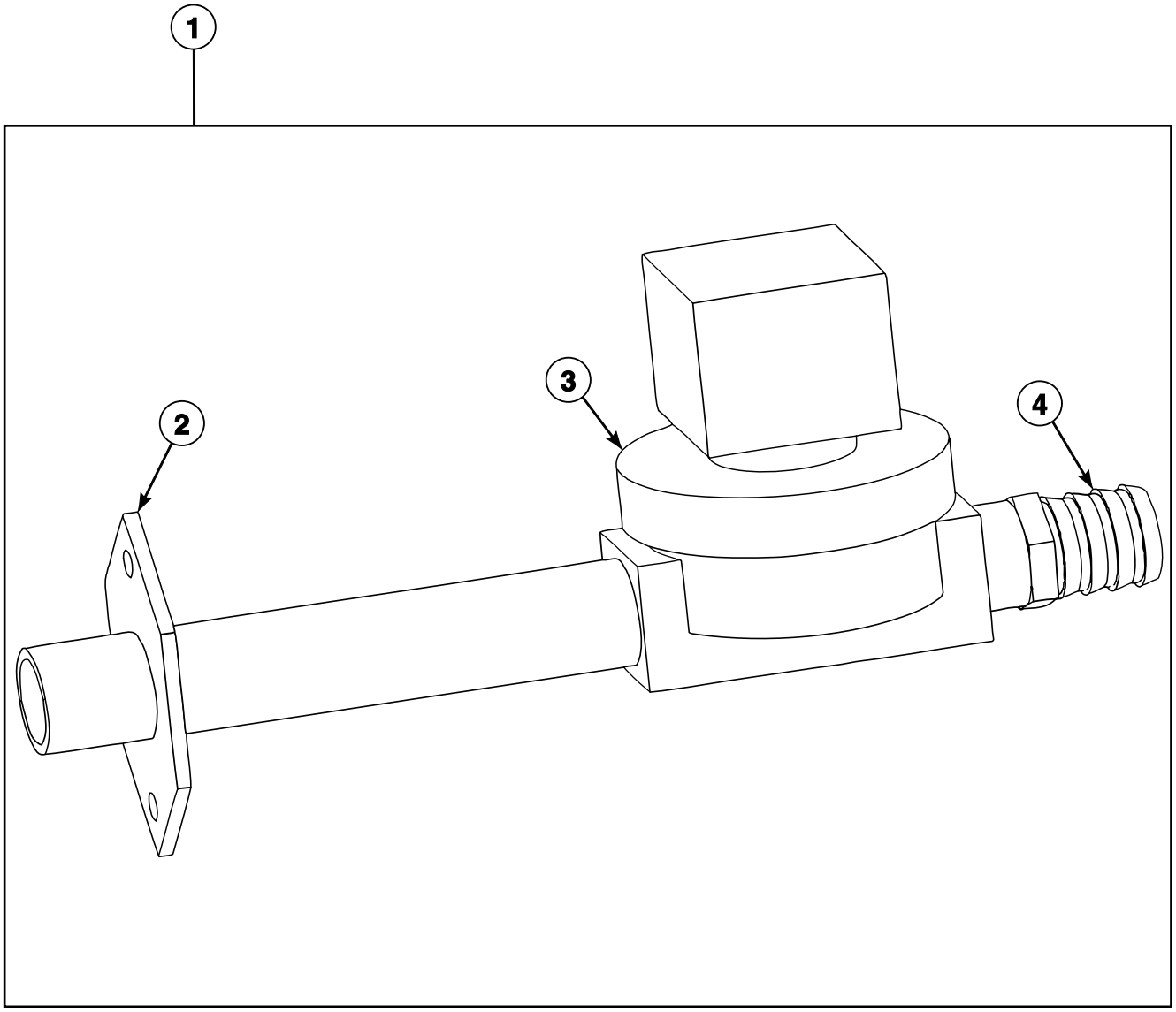

PHM2740P_C002874

© Copyright, Alliance Laundry Systems LLC – DO NOT COPY or TRANSMIT

Auxiliary Plumbing Assembly

REF	PART NO.	DESCRIPTION	COMMENTS
	C000567	Screw	4 required for vacuum breaker to valve panel
	F430935	Screw	2 required for drain valve to drain valve mounting bracket
	F431024	Nut	2 required for drain valve to drain valve mounting bracket
	C000585	Washer	2 required for drain valve to drain valve mounting bracket; Models through 3/23/04
	C000571	Washer	4 required for drain valve to drain valve mounting bracket; Models starting 3/23/04
	F200128P	Water Hose	Auxiliary fill water valve to vacuum breaker
	F8514701	Coil	Use with F8322909 Steam Valve
	F8382301	DIN Valve Adapter Kit	Use with F8322909 Steam Valve
	F8379504	Valve Rebuild Kit	Use with F8322909 Steam Valve
	F380986P	DIN Coil	120 Volt; Parker
1	C001187	Auxiliary Plumbing Assembly	Includes items 2-4
2	C001366	Flange and Nipple Assembly	
3	F380991P	Water Valve Repair Kit	3/4 inch; Use with F381700P Valve
	F8322909P	Valve	Replaces F381700P Valve: Includes F8322909 Steam Valve and F8514701 Coil
4	F421951	Hose Barb	

© Copyright, Alliance Laundry Systems LLC – DO NOT COPY or TRANSMIT

Supply Hose and Filter (Optional)

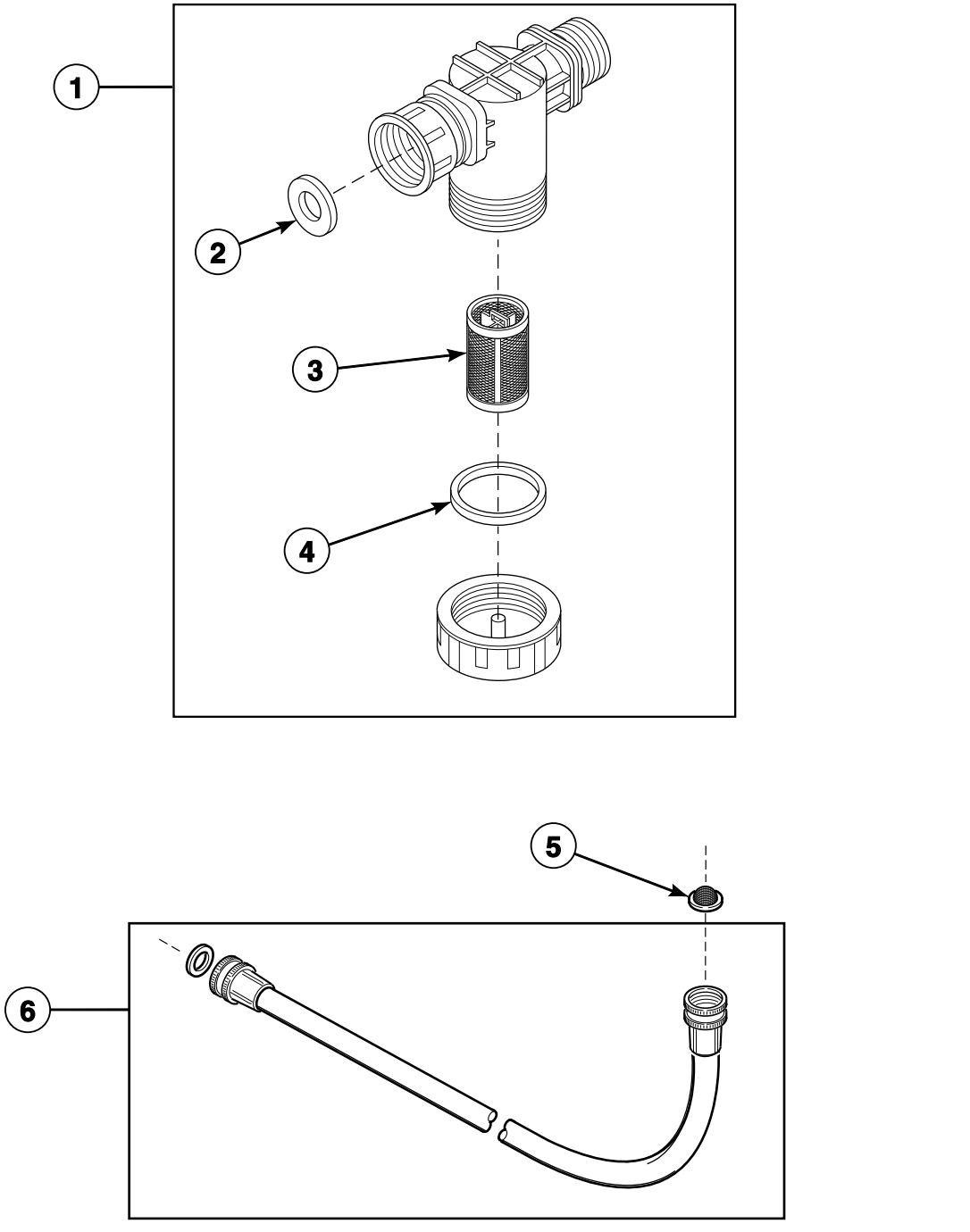

B091P_C002874

© Copyright, Alliance Laundry Systems LLC – DO NOT COPY or TRANSMIT

Supply Hose and Filter (Optional)

REF	PART NO.	DESCRIPTION	COMMENTS
1	F270306P	Filter	Standard thread
	F270305	Filter	Metric thread
2	803615	Washer	Filter
3	F270406	Replacement Filter	.11 mm
	F270405	Replacement Filter	.25 mm
4	F270407	Filter Housing Cap Gasket	
5	803615	Washer	Filter
6	F200116	Fill Hose	3/8 inch; Standard thread
	F200164	Water Hose	3/4 inch; Standard thread
	F200165	Water Hose	3/8 inch; Metric thread
	F200166	Water Hose	3/4 inch; Metric thread

© Copyright, Alliance Laundry Systems LLC – DO NOT COPY or TRANSMIT

Steam Heat Assembly

Models CP040PHN1, CP040PHQ1, CP040PHX2, CP040PMN1, CP040PMQ1, CP040PMX2, CPC40H, CPC40M, IP040PHN1, IP040PHN2, IP040PHQ1, IP040PHX2, IP040PMN1, IP040PMQ1, IP040PMX2, IPH40H, IPH40M, IPH180, JP040PHN1 and JP040PHQ1

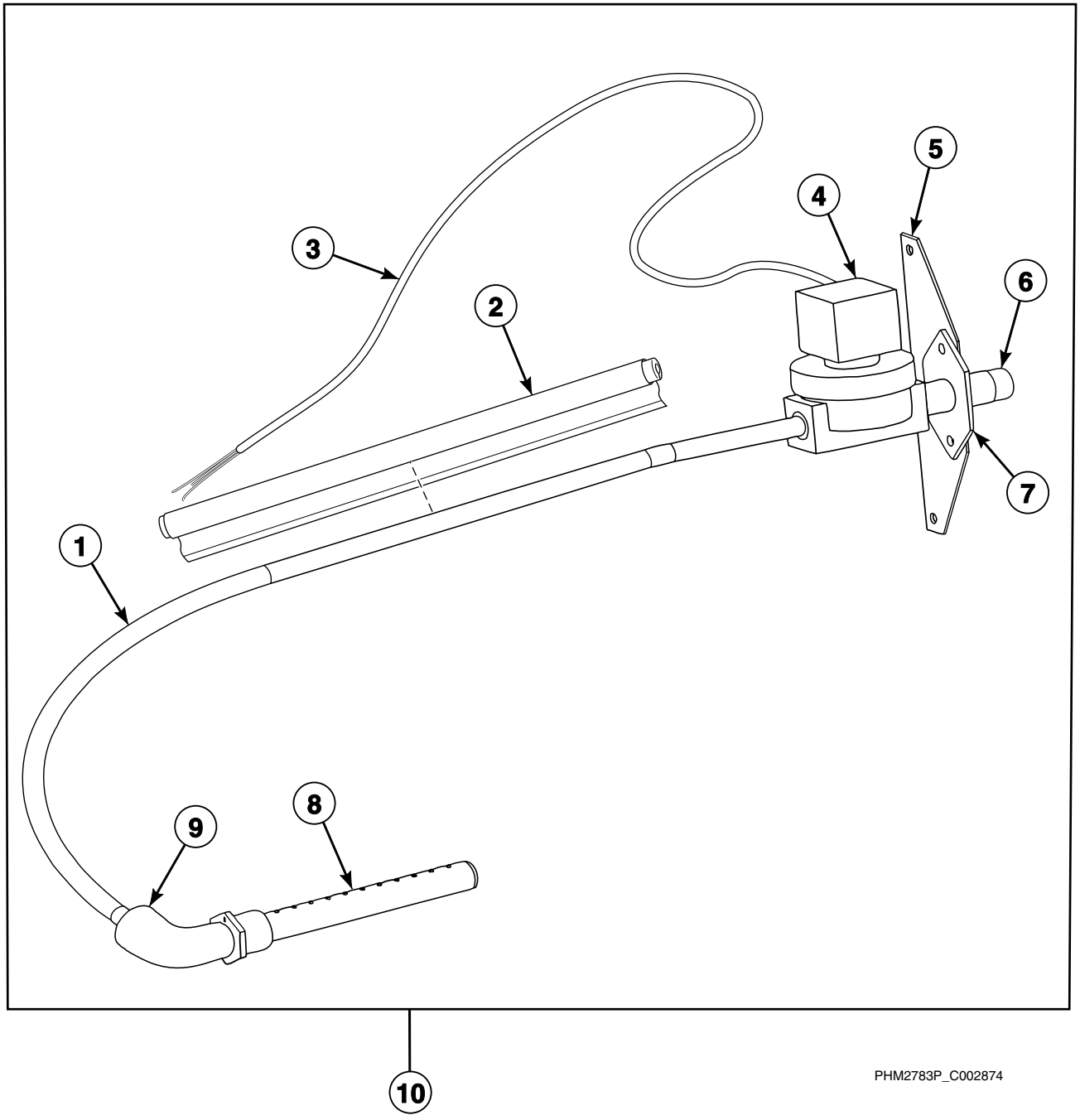

© Copyright, Alliance Laundry Systems LLC – DO NOT COPY or TRANSMIT

Steam Heat Assembly

REF	PART NO.	DESCRIPTION	COMMENTS
	F8514701	Coil	Use with F8322802 Valve
	F8382301	DIN Valve Adapter Kit	Use with F8322802 Valve
	F8379501P	Valve Kit	Use with F8322802 Valve
	F380986P	DIN Coil	120 Volt; Parker
1	C000775	Steam Hose	
2	C001003	Steam Hose Insulation	
3	C002748P	Steam Cord Assembly	
4	F8322802	Valve	Replaces F380786P Steam Valve; Includes F8514701 Coil; For models that have been upgraded with F8521601 DIN Valve Kit
	F8521601	DIN Valve Kit	Replaces F380786P Steam Valve; Includes F8322802 Valve and F8514701 Coil
5	C000981	Steam Valve Mounting Bracket	
6	C000999	Nipple	
7	C000733	Steam Valve Mounting Flange	
8	F8368201	Steam Injector Tube Assembly	
9	F421703	Street Elbow	
10	C001009	Steam Option Assembly	Includes items 1-8

© Copyright, Alliance Laundry Systems LLC – DO NOT COPY or TRANSMIT

Steam Option Assembly

Models CP060PHN1, CP060PHN2, CP060PHQ1, CP060PHQ2, CP060PHX1, CP060PHX2, CP060PMN1, CP060PMQ1, CP060PMX2, CPC60H, CPC60M, IP060PHN1, IP060PHN2, IP060PHQ1, IP060PHQ2, IP060PHX2, IP060PMN1, IP060PMN2, IP060PMQ1, IP060PMX2, IPH60H, IPH60M, IPH270, JP060PHN1, JP060PHN2, JP060PHQ1 and JP060PMQ1

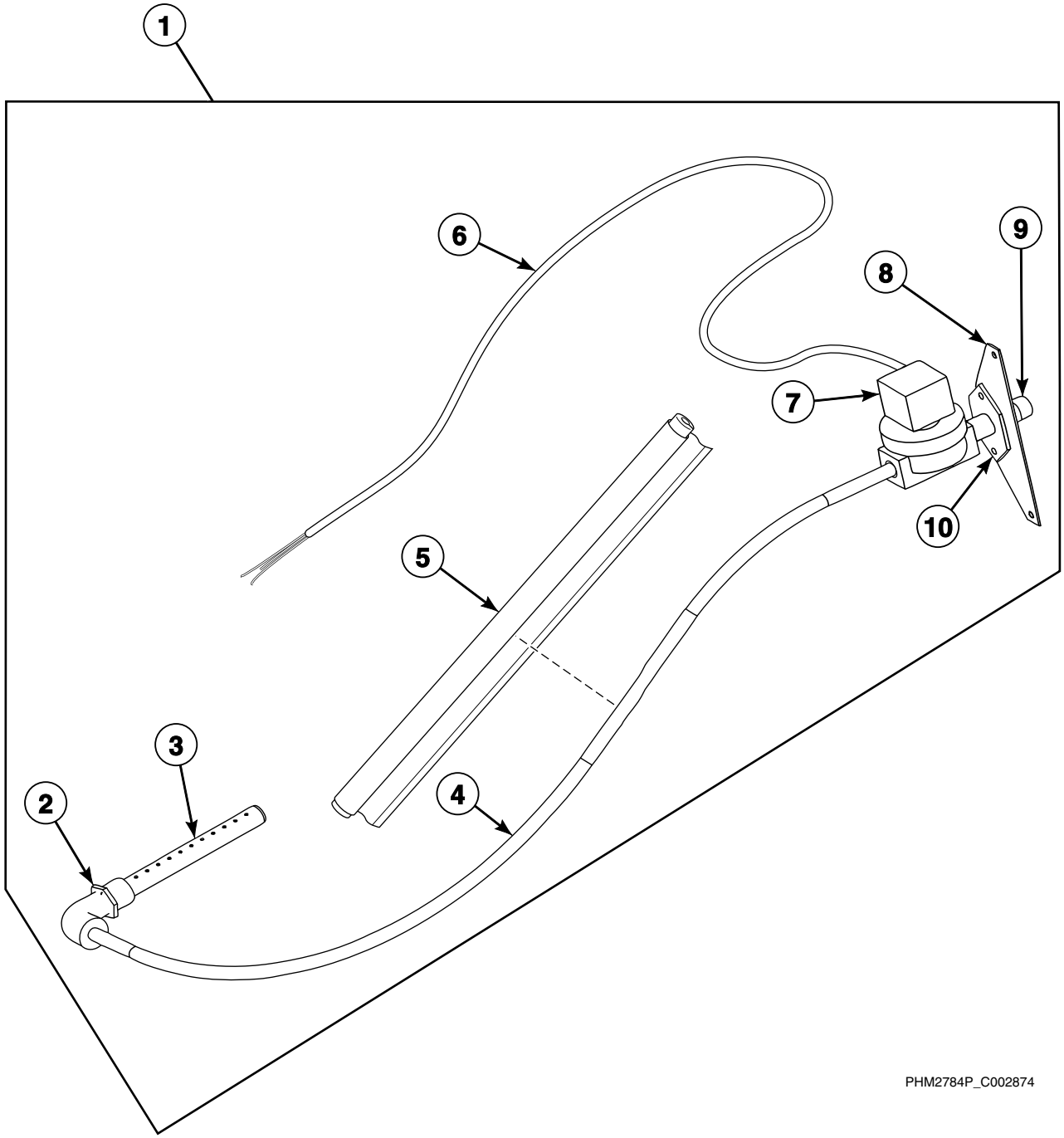

© Copyright, Alliance Laundry Systems LLC – DO NOT COPY or TRANSMIT

Steam Option Assembly

REF	PART NO.	DESCRIPTION	COMMENTS
	F8514701	Coil	Use with F8322802 Valve
	F8382301	DIN Valve Adapter Kit	Use with F8322802 Valve
	F8379501P	Valve Kit	Use with F8322802 Valve
	F380986P	DIN Coil	120 Volt; Parker
1	C001002	Steam Option Assembly	Includes items 2-9
2	F421703	Street Elbow	
3	F83638201	Steam Injector Tube Assembly	
4	C000736	Steam Hose	
5	C001003	Steam Hose Insulation	
6	C002748P	Steam Cord Assembly	
7	F8322802	Valve	Replaces F380786P Steam Valve; Includes F8514701 Coil; For models that have been upgraded with F8521601 DIN Valve Kit
	F8521601	DIN Valve Kit	Replaces F380786P Steam Valve; Includes F8322802 Valve and F8514701 Coil
8	C000981	Steam Valve Mounting Bracket	
9	C000999	Nipple	
10	C000733	Steam Valve Mounting Flange	

© Copyright, Alliance Laundry Systems LLC – DO NOT COPY or TRANSMIT

Shell Assembly (Drawing 1 of 2)

Models CP040PHN1, CP040PHQ1, CP040PHX2, CP040PMN1, CP040PMQ1, CP040PMX2, CPC40H, CPC40M, IP040PHN1, IP040PHN2, IP040PHQ1, IP040PHX2, IP040PMN1, IP040PMQ1, IP040PMX2, IPH40H, IPH40M, IPH180, JP040PHN1 and JP040PHQ1

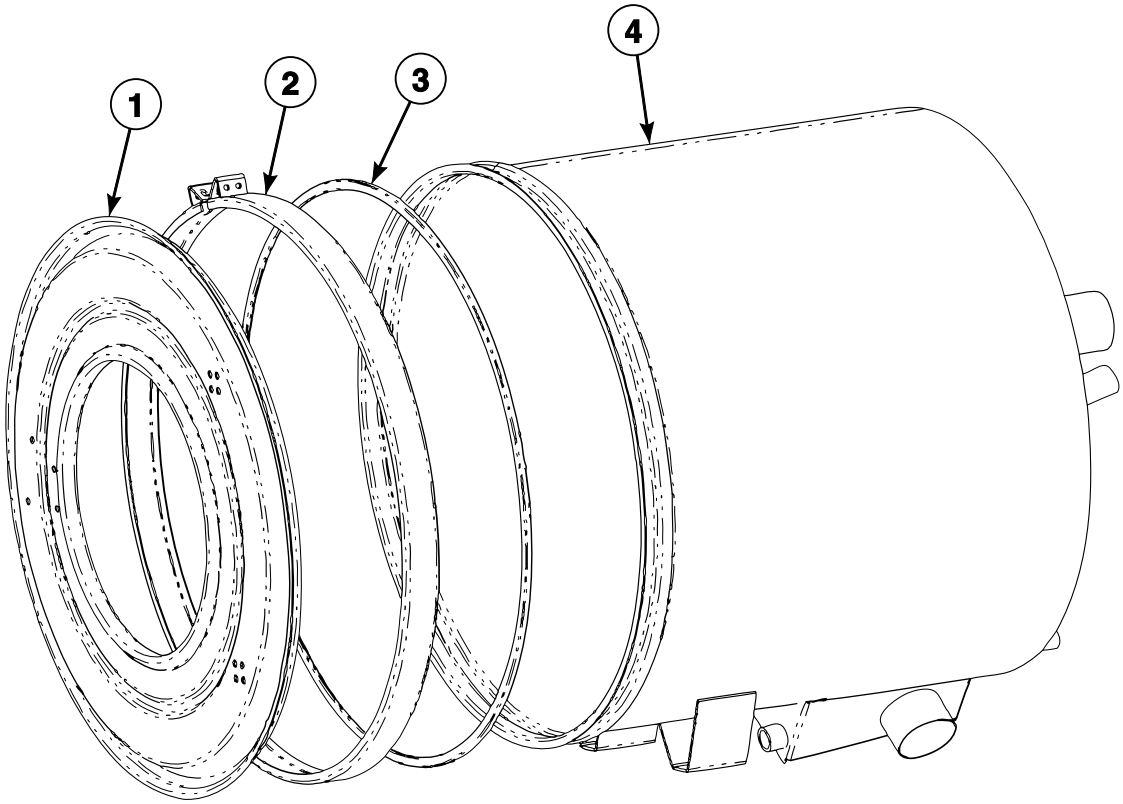

PHM2785P_C002874

© Copyright, Alliance Laundry Systems LLC – DO NOT COPY or TRANSMIT

Shell Assembly (Drawing 1 of 2)

REF	PART NO.	DESCRIPTION	COMMENTS
	C001856	Screw	2 required; To hold shell band together
	F431024	Nut	2 required; To hold shell band together
	C000590	Washer	4 required for models through 3/23/04; As required for models starting 3/23/04; To hold shell band together
	C000273	Bolt	4 required for shell support bracket to frame; 2 required for shell support bracket to shell
	C000611	Nut	4 required for shell support bracket to frame; 2 required for shell support bracket to shell
	C000583	Washer	8 required for shell support bracket to frame; 4 required for shell support bracket to shell
	C000561	Bolt	8 required for shell back to frame; Models through 1/10/10
	70391101	Screw	8 required for shell back to frame; Models starting 1/11/10
	C000599	Vacuum Breaker Hose	Air trap to water level switch; Models starting 3/23/04
1	C002975	Shell Front Assembly	
2	C001735	Shell Band and Clamp Weldment	
3	N/A	Shell Front Gasket	Models through 3/23/04
	C001762	Shell Front Gasket	Models starting 3/23/04
4	C000518	Shell Assembly	

N/A = Part no longer available

© Copyright, Alliance Laundry Systems LLC – DO NOT COPY or TRANSMIT

Shell Assembly (Drawing 2 of 2)

Models CP060PHN1, CP060PHN2, CP060PHQ1, CP060PHQ2, CP060PHX1, CP060PHX2, CP060PMN1, CP060PMQ1, CP060PMX2, CPC60H, CPC60M, IP060PHN1, IP060PHN2, IP060PHQ1, IP060PHQ2, IP060PHX2, IP060PMN1, IP060PMN2, IP060PMQ1, IP060PMX2, IPH60H, IPH60M, IPH270, JP060PHN1, JP060PHN2, JP060PHQ1 and JP060PMQ1

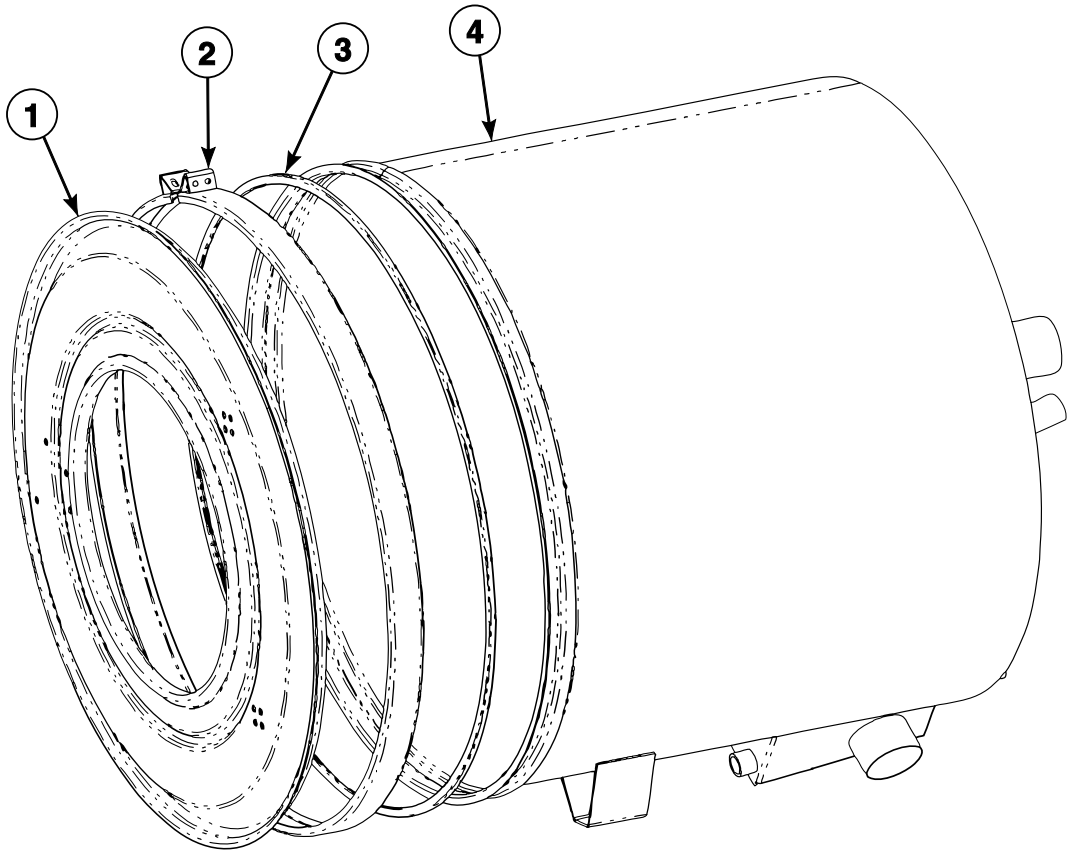

PHM2786P_C002874

© Copyright, Alliance Laundry Systems LLC – DO NOT COPY or TRANSMIT

Shell Assembly (Drawing 2 of 2)

REF	PART NO.	DESCRIPTION	COMMENTS
	C001856	Screw	2 required; To hold shell band together
	F431024	Nut	2 required; To hold shell band together
	C000590	Washer	4 required for models through 3/23/04; As required for models starting 3/23/04; To hold shell band together
	C000273	Bolt	4 required for shell support bracket to frame; 2 required for shell support bracket to shell
	C000611	Nut	4 required for shell support bracket to frame; 2 required for shell support bracket to shell
	C000583	Washer	8 required for shell support bracket to frame; 4 required for shell support bracket to shell
	C000561	Bolt	8 required for shell back to frame; Models through 3/23/04
	C001032	Screw	8 required for shell back to frame; Models starting 3/23/04
	C000599	Vacuum Breaker Hose	Air trap to water level switch; Models starting 3/23/04
1	C002976P	Shell Front Assembly	
2	N/A	Shell Band Assembly	Models through 3/23/04
	F601216	Shell Gasket Shield	Models through 3/23/04
	C000659	Shell Band and Clamp Weldment	Models starting 3/23/04
3	N/A	Shell Front Gasket	Models through 3/23/04
	C001763P	Shell Front Gasket	Models starting 3/23/04
4	C000093	Shell Support	

N/A = Part no longer available

© Copyright, Alliance Laundry Systems LLC – DO NOT COPY or TRANSMIT

Electric Heat Shell Assembly (Drawing 1 of 2)

Models CP040PHN1, CP040PHQ1, CP040PHX2, CP040PMN1, CP040PMQ1, CP040PMX2, CPC40H, CPC40M, IP040PHN1, IP040PHN2, IP040PHQ1, IP040PHX2, IP040PMN1, IP040PMQ1, IP040PMX2, IPH40H, IPH40M, IPH180, JP040PHN1 and JP040PHQ1

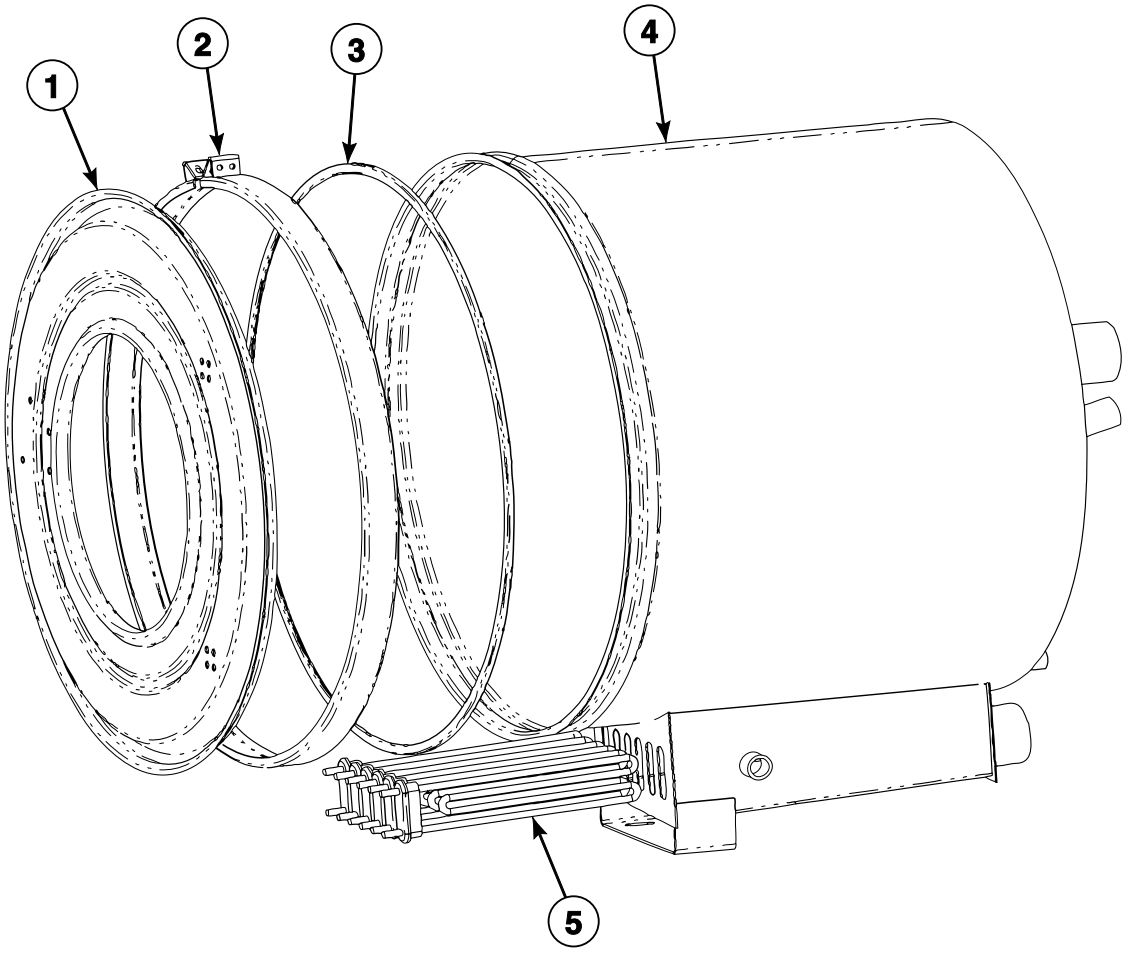

PHM2787P_C002874

© Copyright, Alliance Laundry Systems LLC – DO NOT COPY or TRANSMIT

Electric Heat Shell Assembly (Drawing 1 of 2)

REF	PART NO.	DESCRIPTION	COMMENTS
	C001856	Screw	2 required; To hold shell band together
	F431024	Nut	2 required; To hold shell band together
	C000590	Washer	4 required for models through 3/23/04; As required for models starting 3/23/04; To hold shell band together
	C000273	Bolt	4 required for shell support bracket to frame; 2 required for shell support bracket to shell
	C000611	Nut	4 required for shell support bracket to frame; 2 required for shell support bracket to shell
	C000583	Washer	8 required for shell support bracket to frame; 4 required for shell support bracket to shell
	C000561	Bolt	8 required for shell back to frame; Models through 3/23/04
	C001032	Screw	8 required for shell back to frame; Models starting 3/23/04
	C002755	Electric Heat Harness	
	C002756	Electric Heat Harness	
	C002724	Electric Heat Harness	Option 1
	C002830	Electric Heat Harness	Option 2
	C002758	Electric Heat Harness	200-240 Volt
1	C002975	Shell Front Assembly	
2	C001735	Shell Band and Clamp Weldment	
3	N/A	Shell Front Gasket	Models through 3/23/04
	C001762	Shell Front Gasket	Models starting 3/23/04
4	C000949	Electric Heat Shell Assembly	
5	209/00562/30	Heating Element	

N/A = Part no longer available

© Copyright, Alliance Laundry Systems LLC – DO NOT COPY or TRANSMIT

Electric Heat Shell Assembly (Drawing 2 of 2)

Models CP060PHN1, CP060PHN2, CP060PHQ1, CP060PHQ2, CP060PHX1, CP060PHX2, CP060PMN1, CP060PMQ1, CP060PMX2, CPC60H, CPC60M, IP060PHN1, IP060PHN2, IP060PHQ1, IP060PHQ2, IP060PHX2, IP060PMN1, IP060PMN2, IP060PMQ1, IP060PMX2, IPH60H, IPH60M, IPH270, JP060PHN1, JP060PHN2, JP060PHQ1 and JP060PMQ1

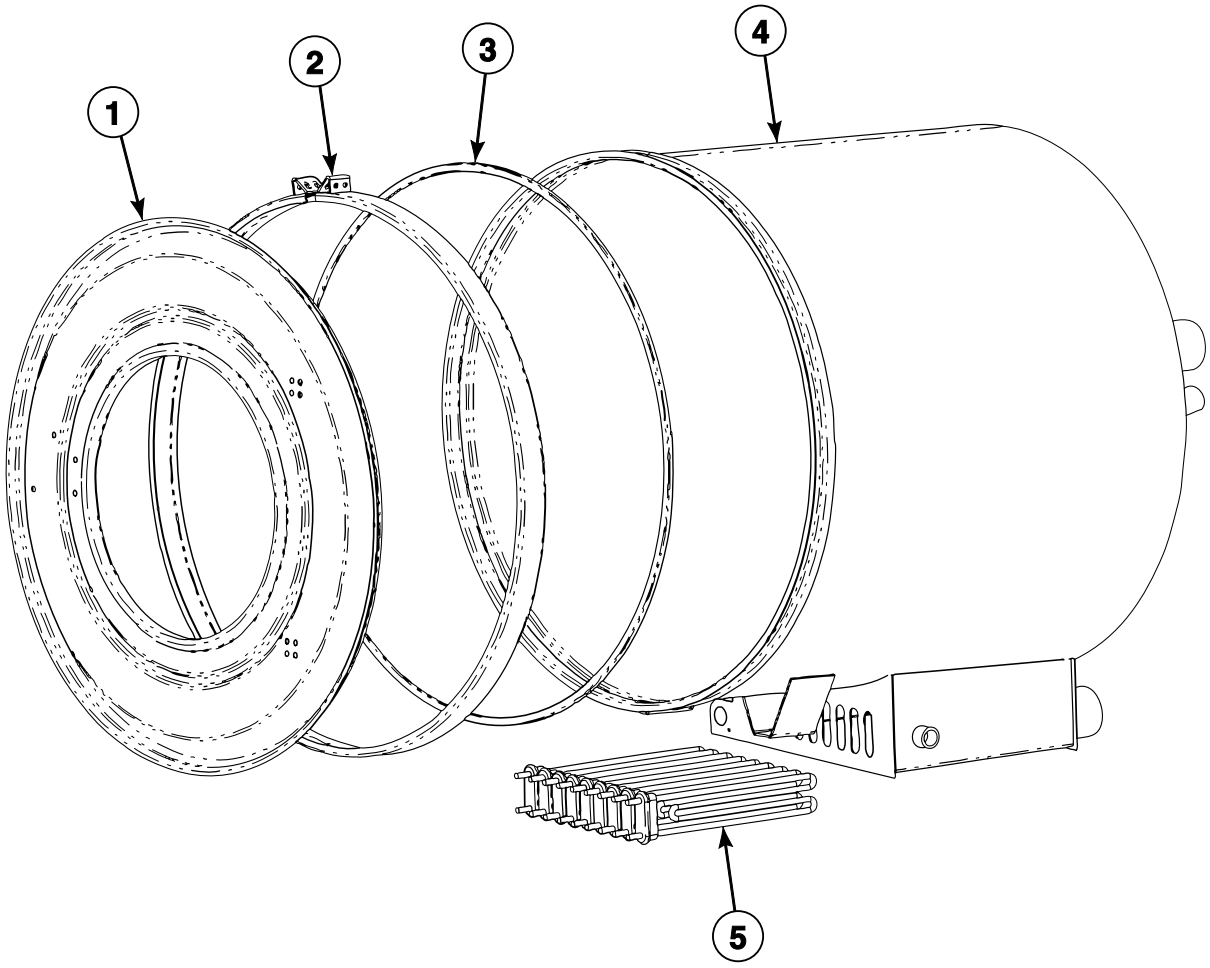

PHM2788P_C002874

© Copyright, Alliance Laundry Systems LLC – DO NOT COPY or TRANSMIT

Electric Heat Shell Assembly (Drawing 2 of 2)

REF	PART NO.	DESCRIPTION	COMMENTS
	C001232	Air Trap Tube	Models through 3/23/04
	C001856	Screw	2 required; To hold shell band together
	F431024	Nut	2 required; To hold shell band together
	C000590	Washer	4 required for models through 3/23/04; As required for models starting 3/23/04; To hold shell band together
	C000273	Bolt	4 required for shell support bracket to frame; 2 required for shell support bracket to shell
	C000611	Nut	4 required for shell support bracket to frame; 2 required for shell support bracket to shell
	C000583	Washer	8 required for shell support bracket to frame; 4 required for shell support bracket to shell
	C000561	Bolt	8 required for shell back to frame; Models through 3/23/04
	C001032	Screw	8 required for shell back to frame; Models starting 3/23/04
1	C002976P	Shell Front Assembly	
2	N/A	Shell Band Assembly	Models through 3/23/04
	F601216	Shell Gasket Shield	Models through 3/23/04
	C000659	Shell Band and Clamp Weldment	Models starting 3/23/04
3	N/A	Shell Front Gasket	Models through 3/23/04
	C001763P	Shell Front Gasket	Models starting 3/23/04
4	C000950	Electric Heat Shell Assembly	
5	209/00562/30	Heating Element	

N/A = Part no longer available

© Copyright, Alliance Laundry Systems LLC – DO NOT COPY or TRANSMIT

Drive Box Assembly

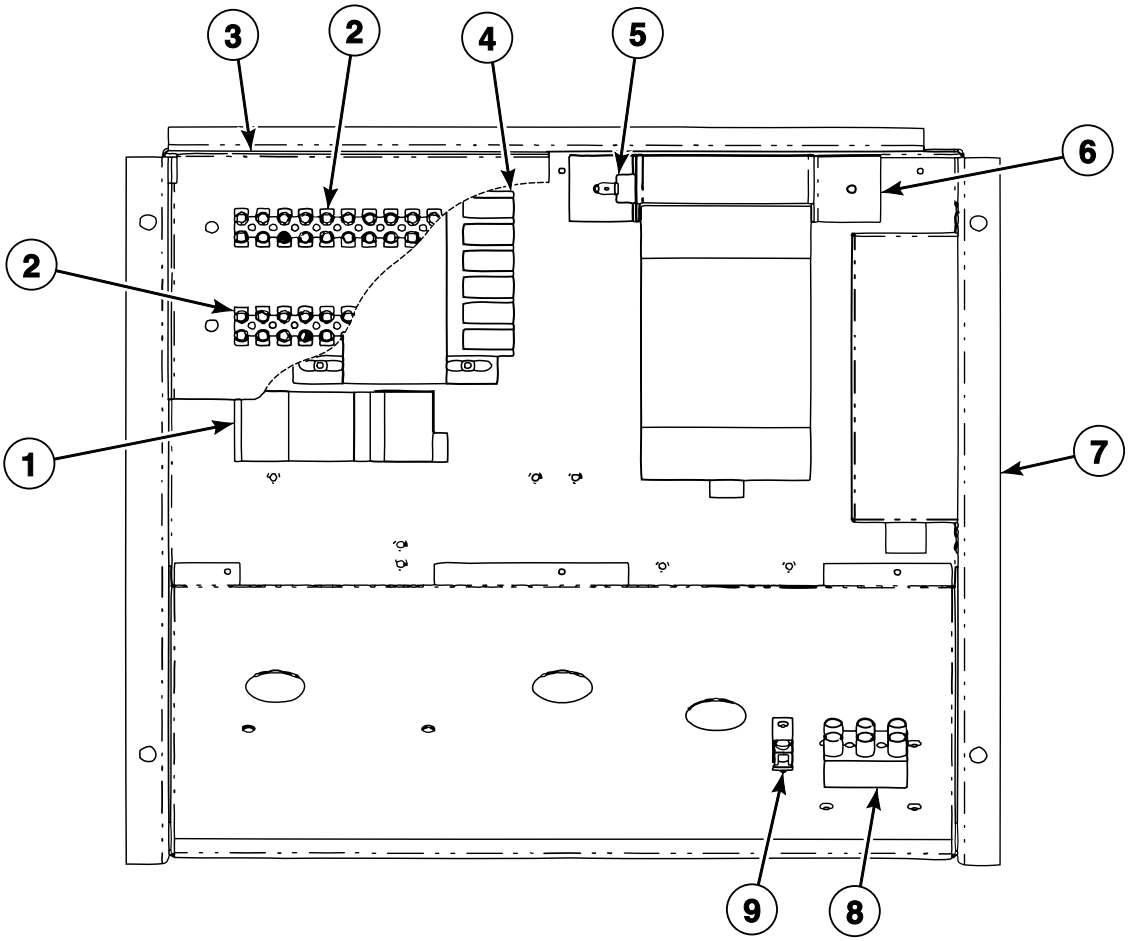

PHM2747P_C002874

© Copyright, Alliance Laundry Systems LLC – DO NOT COPY or TRANSMIT

Drive Box Assembly

REF	PART NO.	DESCRIPTION	COMMENTS
	C000866	Rear Enclosure Harness	
	C000567	Screw	4 required for drive box to valve panel
	C000571	Washer	4 required for drive box to valve panel
	F430909	Screw	2 required for exhaust bracket to box; 4 required for chemical terminal mounting bracket to box for models through 3/23/04; 3 required for chemical terminal mounting bracket to box for models starting 3/23/04; 4 required for AC drive to box; 4 required for EMI filter to box; 4 required for transformer to box; 2 required for ground lug to box
	F431133	Washer	4 required for AC drive to box
	C000575	Screw	2 required for input power block to box
	F430938	Screw	4 required for cooling fan to valve panel; 2 required for chemical signal terminal block to bracket
	C000568	Nut	4 required for cooling fan to valve panel; 2 required for chemical signal terminal block to bracket
	C002779	Chemical Supply Harness	PT1
	C002780	Chemical Supply Harness	PT2
	C002781	Chemical Supply Harness	PT3
	C003020	Electric Heat Control Harness	
	F140602	Tie Wrap Mounting Clamp	
1	N/A	Circuit Breaker	Design 1 models; 1 Amp; 380-480 Volt; Order C0977P3 Circuit Breaker Kit
	N/A	Circuit Breaker	Design 1 models; 2 Amp; 200-240 Volt; Order C0978P3 Circuit Breaker Kit
	C0977P3	Circuit Breaker Kit	380-480 Volt; Includes F350217 Circuit Breaker
	C0978P3	Circuit Breaker Kit	200-240 Volt; Includes C003135 Circuit Breaker
	F350217	Circuit Breaker	Design 2 models or models that have been retrofitted with C0977P3 Circuit Breaker Kit; .5 Amp; 380-480 Volt
	C003135P	Circuit Breaker	Design 2 models or models that have been retrofitted with C0978P3 Circuit Breaker Kit; 1 Amp; 200-240 Volt
2	C000370	Power Block Terminal	12 pole; Chemical supply
3	C000373	Mounting Bracket	
4	C000203	Transformer	150VA
5	C000318	Thermostat	
6	C000323	Exhaust Bracket	
7	C001050	Drive Box Assembly	
8	C000290	Power Block Terminal	Non-electric heat models only
9	N/A	Ground Terminal	

N/A = Part no longer available

© Copyright, Alliance Laundry Systems LLC – DO NOT COPY or TRANSMIT

Electric Heat Drive Box Assembly

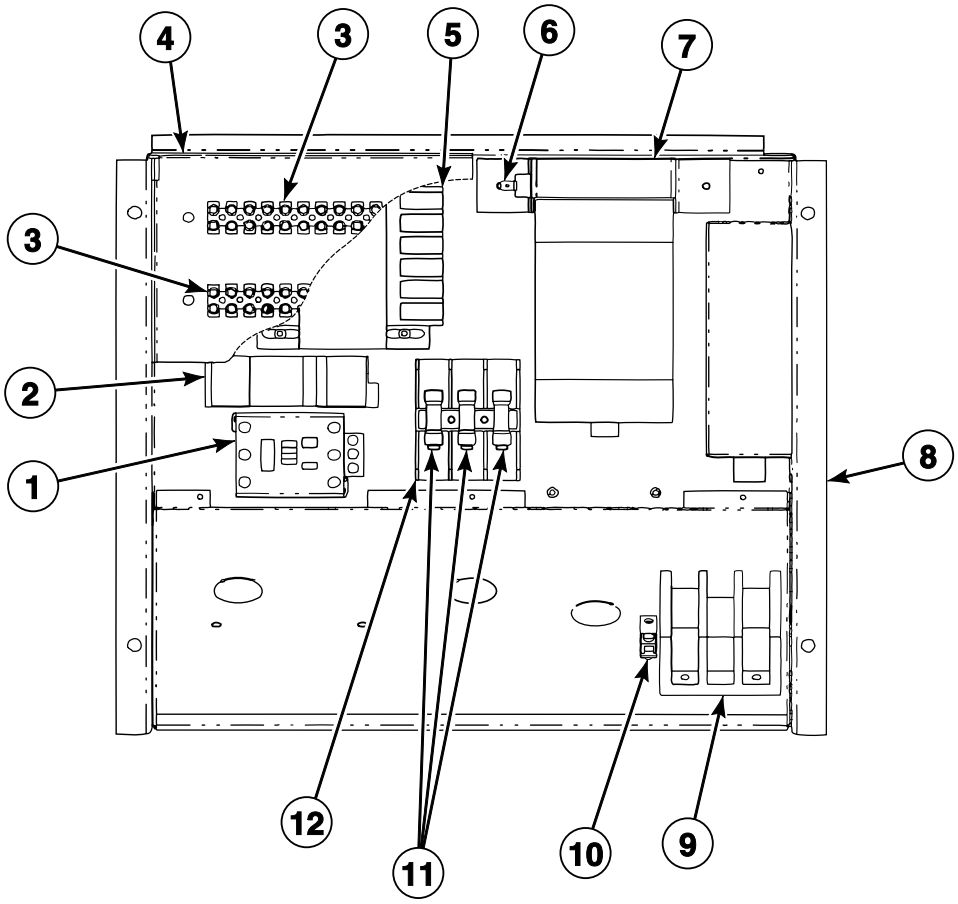

PHM2748P_C002874

© Copyright, Alliance Laundry Systems LLC – DO NOT COPY or TRANSMIT

Electric Heat Drive Box Assembly

REF	PART NO.	DESCRIPTION	COMMENTS
	C000567	Screw	4 required for drive box to valve panel
	C000571	Washer	4 required for drive box to valve panel
	F430909	Screw	2 required for exhaust bracket to box; 4 required for chemical terminal mounting bracket to box for models through 3/23/04; 3 required for chemical terminal mounting bracket to box for models starting 3/23/04; 4 required for AC drive to box; 4 required for EMI filter to box; 4 required for transformer to box; 2 required for ground lug to box
	F431133	Washer	4 required for AC drive to box
	C000575	Screw	2 required for input power block to box
	F430938	Screw	4 required for cooling fan to valve panel; 2 required for chemical signal terminal block to bracket
	C000568	Nut	4 required for cooling fan to valve panel; 2 required for chemical signal terminal block to bracket
1	C000308P	Contactor	400 Volt; 50 Amp
	C000309P	Contactor	200 Volt; 85 Amp
2	N/A	Circuit Breaker	Design 1 models; 1 Amp; 380-480 Volt; Order C0977P3 Circuit Breaker Kit
	N/A	Circuit Breaker	Design 1 models; 2 Amp; 200-240 Volt; Order C0978P3 Circuit Breaker Kit
	C0977P3	Circuit Breaker Kit	380-480 Volt; Includes F350217 Circuit Breaker
	C0978P3	Circuit Breaker Kit	200-240 Volt; Includes C003135 Circuit Breaker
	F350217	Circuit Breaker	Design 2 models or models that have been retrofitted with C0977P3 Circuit Breaker Kit
	C003135P	Circuit Breaker	Design 2 models or models that have been retrofitted with C0978P3 Circuit Breaker Kit
3	C000370	Power Block Terminal	Chemical supply
4	C000373	Mounting Bracket	
5	C000203	Transformer	
6	C000318	Thermostat	
7	C000323	Exhaust Bracket	
8	C001050	Drive Box Assembly	
9	M413865	Power Distribution Block	
10	N/A	Ground Lug Terminal	
11	C001194	Fuse	15 Amp; Models CP060PHN1, CP060PHQ1, CP060PMN1, CP060PMQ1, CPC60H, CPC60M, IP060PHN1, IP060PHQ1, IP060PMN1, IP060PMQ1, IPH60H, IPH60M and IPH270
	C001196	Fuse	10 Amp; All other models
12	C001197	Fuse Holder	

N/A = Part no longer available

© Copyright, Alliance Laundry Systems LLC – DO NOT COPY or TRANSMIT

AC Drive and EMI Filter

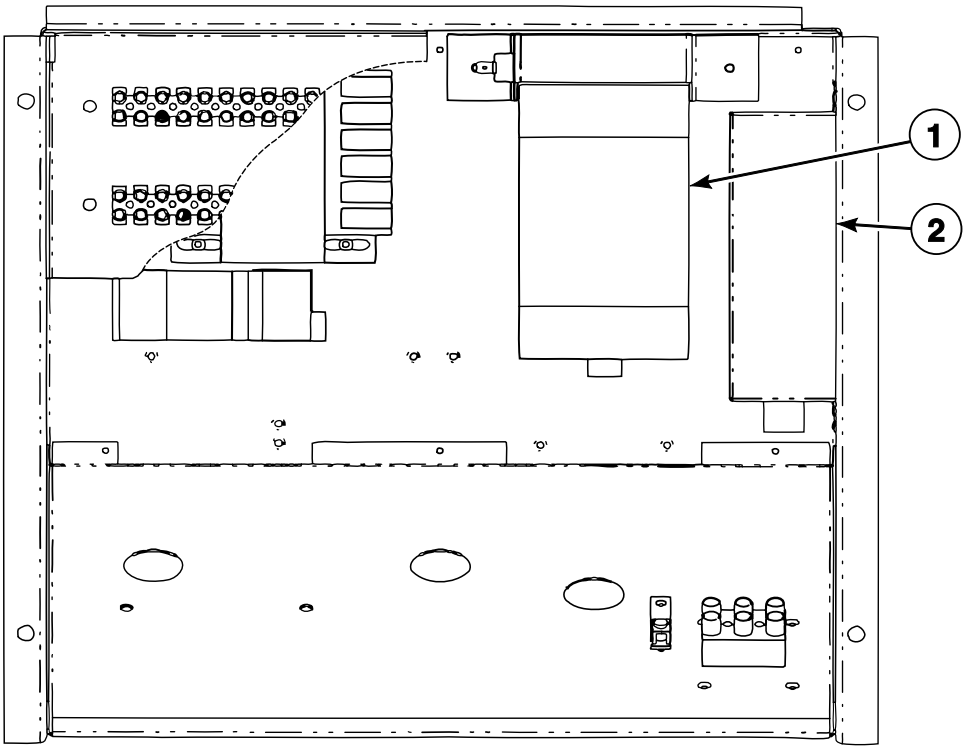

PHM2747PA_C002874

© Copyright, Alliance Laundry Systems LLC – DO NOT COPY or TRANSMIT

AC Drive and EMI Filter

REF	PART NO.	DESCRIPTION	COMMENTS
1	C000287	Inverter	200-240 Volt; 2 hp; Models CP040PHQ1, CP040PMQ1, CP060PMQ1, CPC40H, CPC40M, CPC60M, IP040PHQ1, IP040PMQ1, IP060PMQ1, IPH40H, IPH40M, IPH60M, IPH180 and IPH270
	N/A	Inverter	200-240 Volt; 3 hp; Models CP060PHQ1, CPC60H, IP060PHQ1, IPH60H and JP060PHQ1; Order C003043 160-series to PowerFlex 40 Drive Kit
	C000288	Inverter	380-480 Volt; 2 hp; Models CP040PHN1, CP040PMN1, CP060PMN1, CPC40H, CPC40M, CPC60M, IP040PHN1, IP040PMN1, IP060PMN1, IPH40H, IPH40M, IPH60M, IPH180, IPH270 and JP040PHN1; Order C003033 160-series to PowerFlex 40 Drive Kit
	N/A	Inverter	380-480 Volt; 3 hp; Models CP060PHN1, CPC60H, IP060PHN1 and IPH60H; Order C003045 160-series to PowerFlex 40 Drive Kit
2	F330281	EMI Filter	380-480 Volt; Models CP040PHN1, CP040PMN1, CP060PMN1, CPC40H, CPC40M, CPC60M, IP040PHN1, IP040PMN1, IP060PMN1, IPH40H, IPH40M, IPH60M, IPH180 and IPH270
	F330280P	EMI Filter	200-240 Volt models CP040PMQ1, CP060PHQ1, CP060PMQ1, CPC40H, CPC40M, CPC60H, CPC60M, IP040PHQ1, IP040PMQ1, IP060PHQ1, IP060PMQ1, IPH40H, IPH40M, IPH60H, IPH60M, IPH180 and IPH270; 400 Volt models CP060PHN1, CPC60H, IP060PHN1 and IPH60H

N/A = Part no longer available

© Copyright, Alliance Laundry Systems LLC – DO NOT COPY or TRANSMIT

AC Drive and EMI Filter - Electric Heat Models

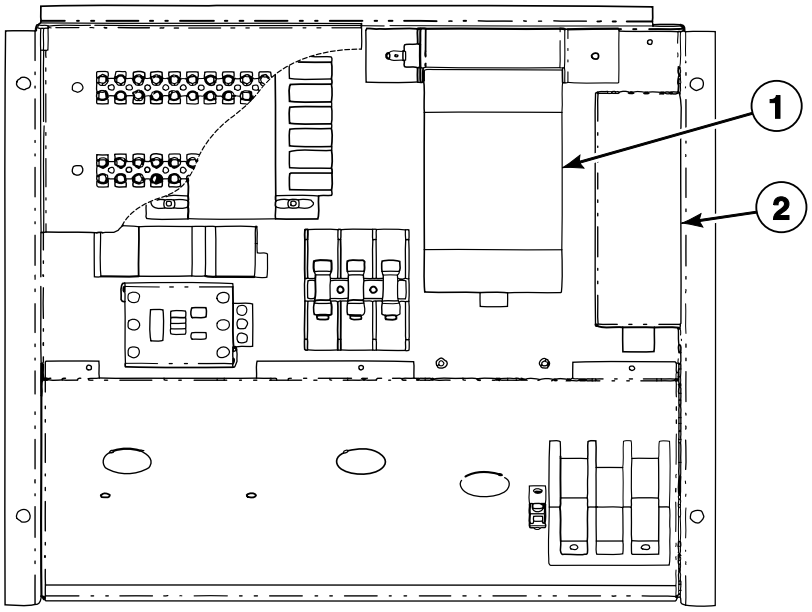

PHM2748PA_C002874

© Copyright, Alliance Laundry Systems LLC – DO NOT COPY or TRANSMIT

AC Drive and EMI Filter - Electric Heat Models

REF	PART NO.	DESCRIPTION	COMMENTS
1	C000287	Inverter	200-240 Volt; 2 hp; Models CP040PHQ1, CP040PMQ1, CP060PMQ1, CPC40H, CPC40M, CPC60M, IP040PHQ1, IP040PMQ1, IP060PMQ1, IPH40H, IPH40M, IPH60M, IPH180 and IPH270
	N/A	Inverter	200-240 Volt; 3 hp; Models CP060PHQ1, CPC60H, IP060PHQ1, IPH60H and JP060PHQ1; Order C003043 160-series to PowerFlex 40 Drive Kit
	C000288	Inverter	380-480 Volt; 2 hp; Models CP040PHN1, CP040PMN1, CP060PMN1, CPC40H, CPC40M, CPC60M, IP040PHN1, IP040PMN1, IP060PMN1, IPH40H, IPH40M, IPH60M, IPH180 and IPH270; Order C003033 160-series to PowerFlex 40 Drive Kit
	N/A	Inverter	380-480 Volt; 3 hp; Models CP060PHN1, CPC60H, IP060PHN1 and IPH60H; Order C003045 160-series to PowerFlex 40 Drive Kit
2	F330281	EMI Filter	380-480 Volt; Models CP040PHN1, CP040PMN1, CP060PMN1, CPC40H, CPC40M, CPC60M, IP040PHN1, IP040PMN1, IP060PMN1, IPH40H, IPH40M, IPH60M, IPH180 and IPH270
	F330280P	EMI Filter	200-240 Volt models CP040PMQ1, CP060PHQ1, CP060PMQ1, CPC40H, CPC40M, CPC60H, CPC60M, IP040PHQ1, IP040PMQ1, IP060PHQ1, IP060PMQ1, IPH40H, IPH40M, IPH60H, IPH60M, IPH180 and IPH270; 400 Volt models CP060PHN1, CPC60H, IP060PHN1 and IPH60H

N/A = Part no longer available

© Copyright, Alliance Laundry Systems LLC – DO NOT COPY or TRANSMIT

PowerFlex Drive and EMI Filter - Design 1 Models

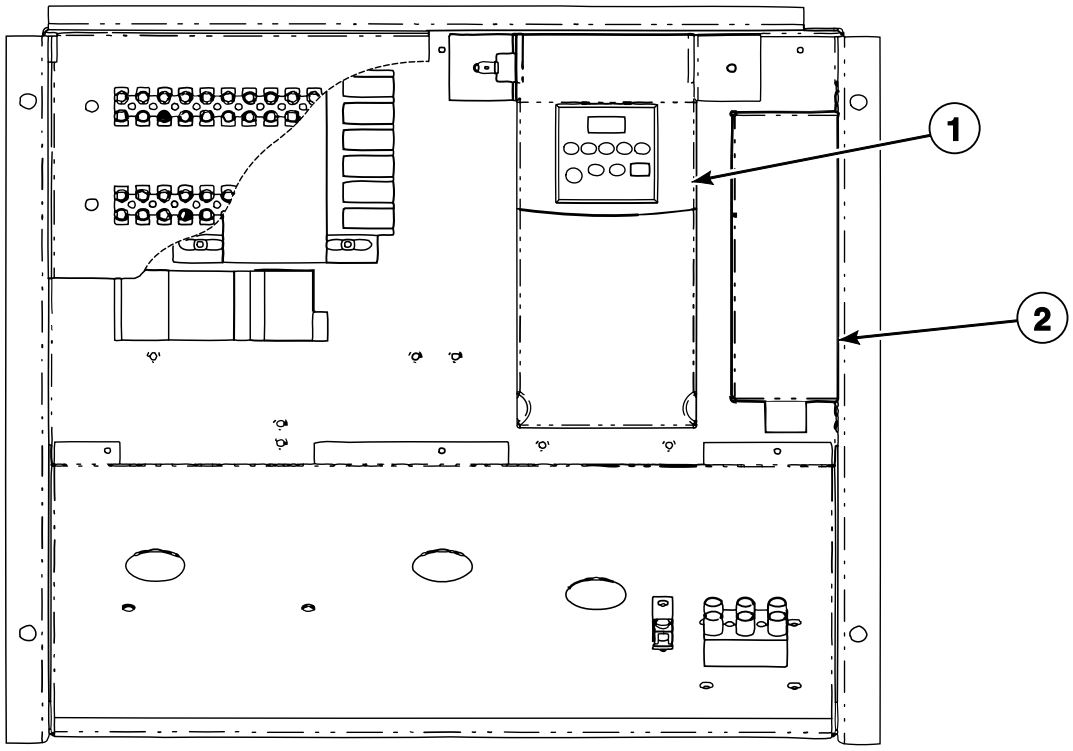

PHM3028P_C002874

© Copyright, Alliance Laundry Systems LLC – DO NOT COPY or TRANSMIT

PowerFlex Drive and EMI Filter - Design 1 Models

REF	PART NO.	DESCRIPTION	COMMENTS
	C003028	Harness	
1	C003031	160-Series to PowerFlex 40 Drive Kit	200-240 Volt; CP040, CPC40, IP040 and IPH40 M-series models; Models with LM26252 Lincoln Motor; Includes F8168603 AC Drive
	C003039	160-Series to PowerFlex 40 Drive Kit	200-240 Volt; CP060, CPC60, IP060, IPH60 and JP060 M-series models; Includes F8168603 AC Drive
	C003033	160-Series to PowerFlex 40 Drive Kit	380-480 Volt; CP040, CPC40, IP040 and IPH40 M-series models; Models with LM26252 Lincoln Motor; Includes F8168604 AC Drive
	C003041	160-Series to PowerFlex 40 Drive Kit	380-480 Volt; CP060, CPC60, IP060, IPH60 and JP060 M-series models; Includes F8168604 AC Drive
	C003035	160-Series to PowerFlex 40 Drive Kit	200-240 Volt; CP040, CPC40, IP040, IPH40 and JP040 H-series models; Includes F8168603 AC Drive
	C003043	160-Series to PowerFlex 40 Drive Kit	200-240 Volt; CP060, CPC60, IP060, IPH60 and JP060 H-series models; Includes F8168603 AC Drive
	C003046	PowerFlex 40 Drive	380-480 Volt; CP060, CPC60, IP060, IPH60 and JP060 H-series models that have been retrofitted with C003045 160-series to PowerFlex 40 Drive Kit; Includes F8168604 AC Drive
	C003044	PowerFlex 40 Drive	200-240 Volt; CP060, CPC60, IP060, IPH60 and JP060 H-series models that have been retrofitted with C003043 160-series to PowerFlex 40 Drive Kit; Includes F8168603 AC Drive
	C003037	160-Series to PowerFlex 40 Drive Kit	380-480 Volt; CP040, CPC40, IP040, IPH40 and JP040 H-series models; Includes F8168604 AC Drive
	C003045	160-Series to PowerFlex 40 Drive Kit	380-480 Volt; CP060, CPC60, IP060, IPH60 and JP060 H-series models; Includes F8168604 AC Drive
2	F8053902	EMI Filter	380-480 Volt; Models CP040PHN1, CP040PMN1, CP060PMN1, CPC40H, CPC40M, CPC60M, IP040PHN1, IP040PMN1, IP060PMN1, IPH40H, IPH40M, IPH60M, IPH180 and IPH270
	F8053901P	EMI Filter	200-240 Volt models CP040PMQ1, CP060PHQ1, CP060PMQ1, CPC40H, CPC40M, CPC60H, CPC60M, IP040PHQ1, IP040PMQ1, IP060PHQ1, IP060PMQ1, IPH40H, IPH40M, IPH60H, IPH60M, IPH180 and IPH270; 400 Volt models CP060PHN1, CPC60H, IP060PHN1 and IPH60H

© Copyright, Alliance Laundry Systems LLC – DO NOT COPY or TRANSMIT

PowerFlex Drive and EMI Filter - Design 2 Models

Models CP040PHX2, CP040PMX2, CP060PHN2, CP060PHQ2, CP060PHX2, CP060PMX2, IP040PHN2, IP040PHX2, IP040PMX2, IP060PHN2, IP060PHQ2, IP060PHX2, IP060PMN2, IP060PMX2 and JP060PHN2

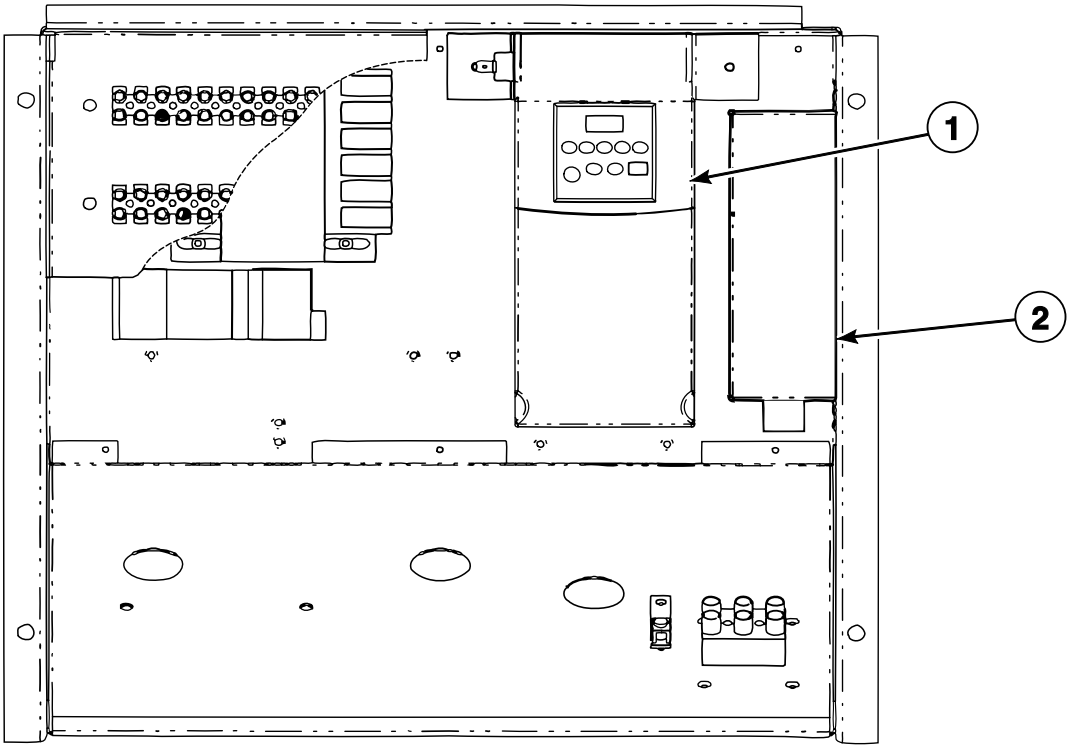

PHM3028P_C002874

© Copyright, Alliance Laundry Systems LLC – DO NOT COPY or TRANSMIT

PowerFlex Drive and EMI Filter - Design 2 Models

REF	PART NO.	DESCRIPTION	COMMENTS
1	C003044	PowerFlex 40 Drive	200-240 Volt; Models CP060PHQ2, CP060PHX2, IP060PHN2, IP060PHQ2, IP060PHX2 and JP060PHN2; Includes F8168603 AC Drive
	C003046	PowerFlex 40 Drive	380-480 Volt; Models CP060PHN2, IP060PHN2 and JP060PHN2; Includes F8168604 AC Drive
	C003032	PowerFlex 40 Drive	200-240 Volt; Models CP040PMX2 and IP040PMX2; Includes F8168603 AC Drive
	C003034	PowerFlex 40 Drive	380-480 Volt; Models CP040PMX2 and IP040PMX2; Includes F8168604 AC Drive
	C003036	PowerFlex 40 Drive	200-240 Volt; Models CP040PHX2 and IP040PHX2; Includes F8168603 AC Drive
	C003038	PowerFlex 40 Drive	380-480 Volt; Models CP040PHX2, IP040PHN2 and IP040PHX2; Includes F8168604 AC Drive
	C003040	PowerFlex 40 Drive	200-240 Volt; Models CP060PMX2, IP060PMN2 and IP060PMX2; Includes F8168603 AC Drive
	C003042	PowerFlex 40 Drive	380-480 Volt; Models CP060PMX2, IP060PMN2 and IP060PMX2; Includes F8168604 AC Drive
2	F8053902	EMI Filter	Models CP040PHX2, CP040PMX2, IP040PHX2 and IP040PMX2
	F8053901P	EMI Filter	Models CP060PHN2, CP060PHQ2, CP060PHX2, IP060PHN2, IP060PHQ2 and JP060PHN2

© Copyright, Alliance Laundry Systems LLC – DO NOT COPY or TRANSMIT

Main Assembly (Drawing 1 of 8)

Models CP060PHN1, CP060PHN2, CP060PHQ1, CP060PHQ2, CP060PHX1, CP060PHX2, CPC60H, IP060PHN1, IP060PHN2, IP060PHQ1, IP060PHQ2, IP060PHX2, IPH60H, JP060PHN1, JP060PHN2 and JP060PHQ1

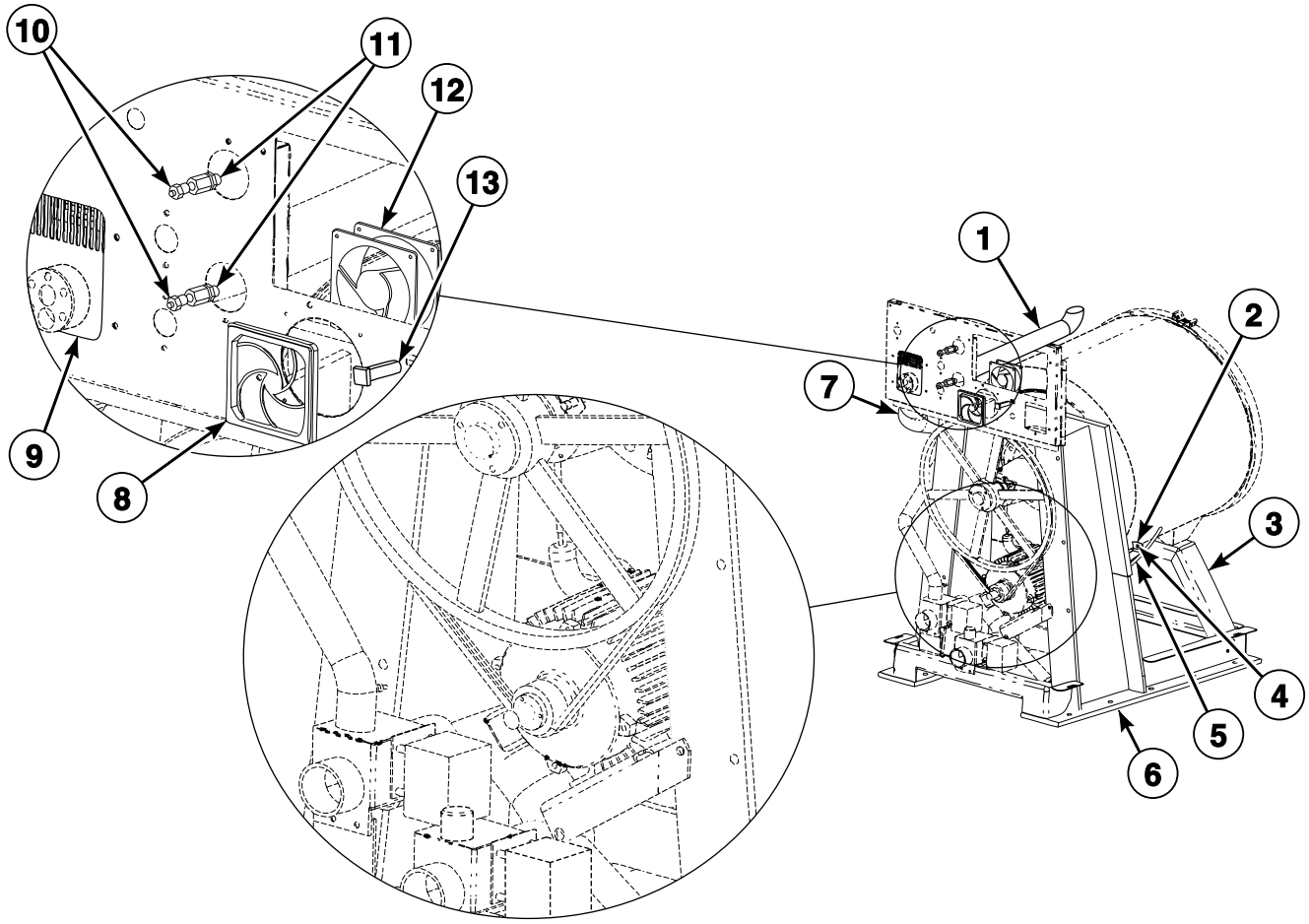

PHM2796P_C002874

© Copyright, Alliance Laundry Systems LLC – DO NOT COPY or TRANSMIT

Main Assembly (Drawing 1 of 8)

REF	PART NO.	DESCRIPTION	COMMENTS
	C000679	Vacuum Breaker Plug	6 required; Models through 3/23/04; Use with old style vacuum breaker
	C000680	Adapter	6 required; Models through 3/23/04; Use with old style vacuum breaker
	C000583	Washer	4 required for shell support bracket to shell
	F200222	Hose Clamp	4 required for inlet valve to vacuum breaker
	F200201	Hose Clamp	2 required for fill inlet hose
	C000552	Hose	Flush hose for vacuum breaker; Models starting 3/23/04
	C000273	Bolt	2 required for shell support bracket to shell
	C000611	Nut	2 required for shell support bracket to shell
	C000567	Screw	4 required for vacuum breaker to valve panel
	F431024	Nut	4 required for vacuum breaker to valve panel; Models through 3/23/04
	N/A	Nut	4 required for vacuum breaker to valve panel; Models starting 3/23/04
1	C000379	Supply Dispenser Hose	
2	C002054	Shell Support Brace	Models starting 3/23/04
3	C000079	Lower Shell Support Bracket	
4	225/10004/00	Thermostat Grommet	
5	C002636	Temperature Probe Assembly	
6	N/A	Frame Weldment	
7	C000378	Water Inlet Hose	
8	C000210	Fan Filter Guard Assembly	
	F200318900P	Filter	5 pack
9	C000390	Vacuum Breaker Assembly	
10	N/A	Grease Fitting	2 required; Models through 3/23/04
	C000549	Grease Fitting	2 required; Models starting 3/23/04
11	N/A	Grease Coupling	2 required; Models through 3/23/04
	C001789	Connector	2 required; Models starting 3/23/04
12	C000211	Fan	
13	C000317	Circuit Breaker	2 Amp

N/A = Part no longer available

© Copyright, Alliance Laundry Systems LLC – DO NOT COPY or TRANSMIT

Main Assembly (Drawing 2 of 8)

Models CP060PHN1, CP060PHN2, CP060PHQ1, CP060PHQ2, CP060PHX1, CP060PHX2, CPC60H, IP060PHN1, IP060PHN2, IP060PHQ1, IP060PHQ2, IP060PHX2, IPH60H, JP060PHN1, JP060PHN2 and JP060PHQ1

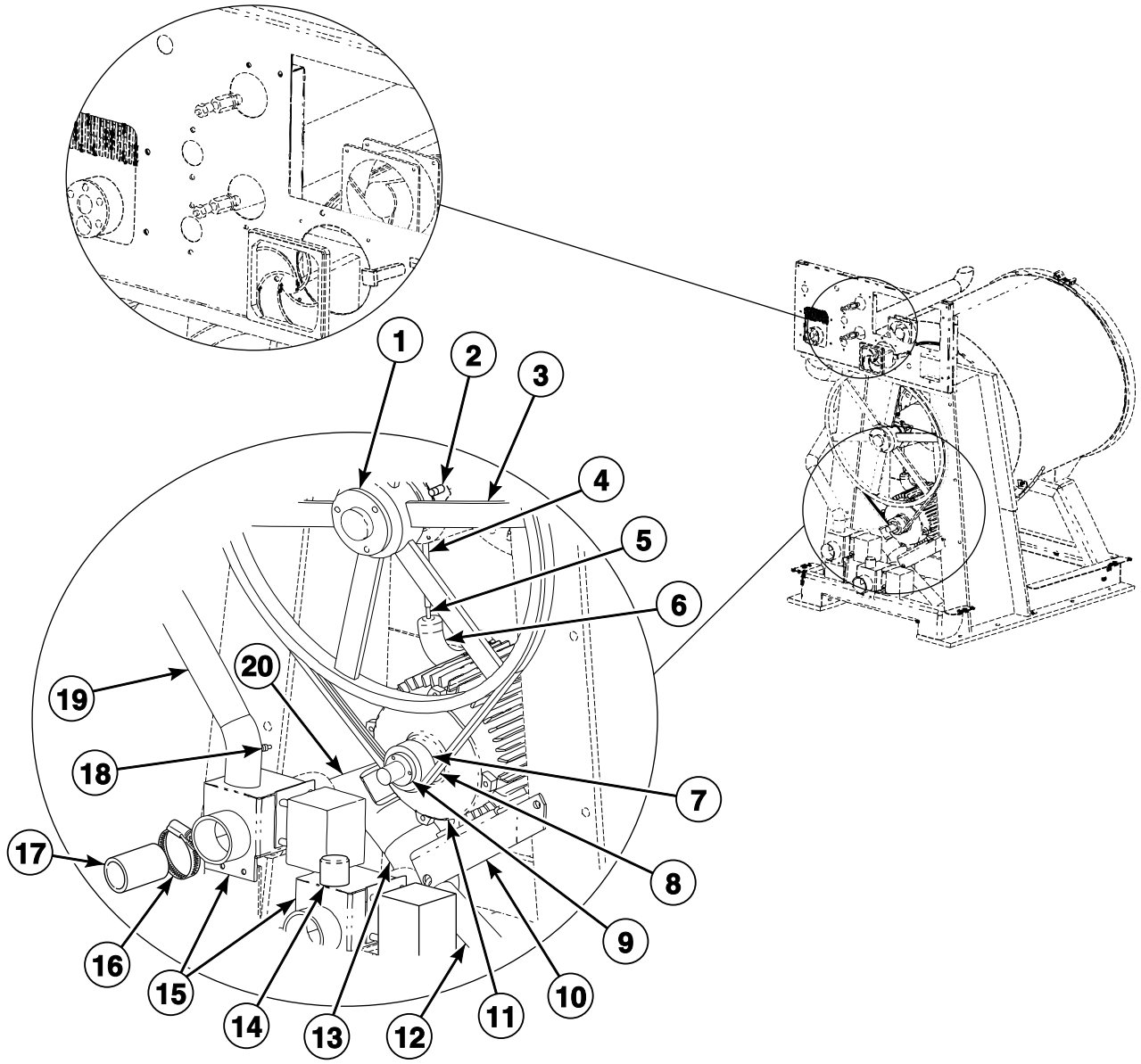

PHM3226P_C002874

© Copyright, Alliance Laundry Systems LLC – DO NOT COPY or TRANSMIT

Main Assembly (Drawing 2 of 8)

REF	PART NO.	DESCRIPTION	COMMENTS
	C000971	Overflow T-Drain Assembly	
	C002422	Motor Cable	
	C000304	Motor Cable	
	C002613	Drain Harness	
	C002614P	Drain Harness	
	C002858	Dual Drain Harness	
	F430144	Screw	4 required for motor to motor plate
	C000556	Washer	8 required for motor to motor plate
	803017	Nut	4 required for motor to motor plate
	F430124	Screw	1 required for motor plate to frame
	C000612	Screw	1 required for motor plate to frame for models through 3/23/04; 2 required for motor plate to frame for models starting 3/23/04
	C000177	Washer	1 required for motor plate to frame for models through 3/23/04; As required for motor plate to frame for models starting 3/23/04
	C000583	Washer	2 required for motor plate to frame for models through 3/23/04; 3 required for motor plate to frame for models starting 3/23/04
	90554	Hose Clamp	1 required for air trap
	F200213	Hose Clamp	2 required for overflow hose for models through 3/23/04; 4 required for overflow hose for models starting 3/23/04
	C003295	Drain T	Models starting 3/6/13; Replaces use of C001649 Reducing Connector
	C003316P	Alignment Tool	
1	C000223P	Cylinder Bushing	
2	C002637P	Proximity Switch Assembly	
3	C000222	Cylinder Pulley	
4	C000599	Vacuum Breaker Hose	
5	C000662	Air Trap Tube	Brass
6	C000654	Air Trap Tube Elbow	Rubber
7	C000224	Motor Pulley	
8	C001053	Belt	
9	F280233P	Bushing	
10	C000130	Motor Bracket	
11	C000205	Motor	
12	N/A	Belt Tension Spring	Models through 3/23/04
	C001800	Belt Tension Spring	Models starting 3/23/04
13	F8617701	Drain Elbow Hose	
14	C001793	Cap	Models starting 3/23/04
15	C003353	Drain Valve	2 required
16	F200201	Hose Clamp	2 required for drain hose
17	F200165100	Drain Hose	No. 56
18	C001649	Reducing Connector	2 required; Models starting 3/23/04 through 3/6/13
19	C000377	Overflow Hose	
20	C000411	Drain Hose	

N/A = Part no longer available

© Copyright, Alliance Laundry Systems LLC – DO NOT COPY or TRANSMIT

Main Assembly (Drawing 3 of 8)

Models CP060PMN1, CP060PMQ1, CP060PMX2, CPC60M, IP060PMN1, IP060PMN2, IP060PMQ1, IP060PMX2, IPH60M, IPH270 and JP060PMQ1

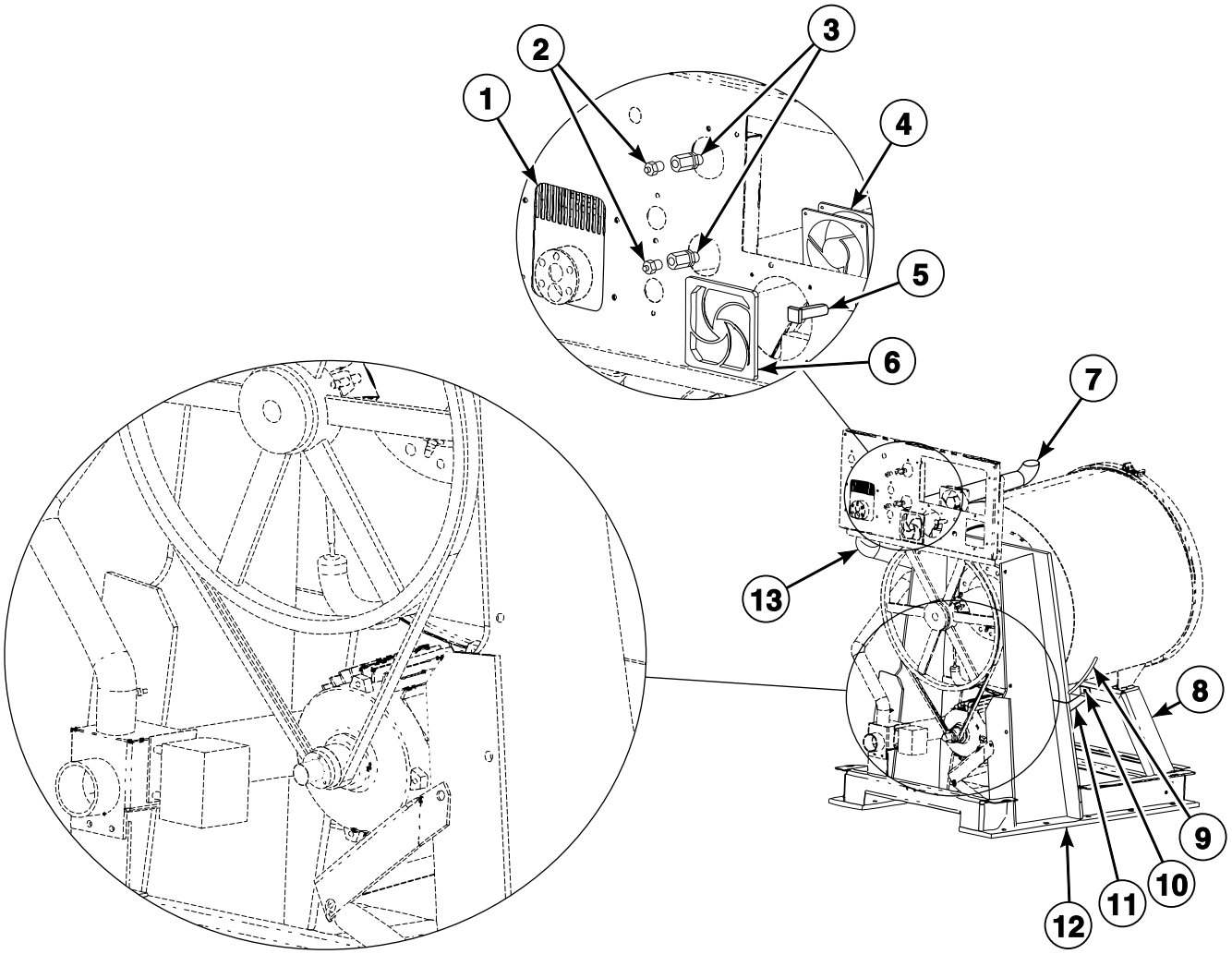

PHM2797P_C002874

© Copyright, Alliance Laundry Systems LLC – DO NOT COPY or TRANSMIT

Main Assembly (Drawing 3 of 8)

REF	PART NO.	DESCRIPTION	COMMENTS
	C000679	Vacuum Breaker Plug	6 required; Models through 3/23/04; Use with old style vacuum breaker
	C000680	Adapter	6 required; Models through 3/23/04; Use with old style vacuum breaker
	C001772	Vacuum Breaker Cover	Models starting 3/23/04
	C000583	Washer	4 required for shell support bracket to shell
	F200222	Hose Clamp	4 required for inlet valve to vacuum breaker
	F200201	Hose Clamp	2 required for fill inlet hose
	C000552	Hose	Flush hose for vacuum breaker; Models starting 3/23/04
	C000273	Bolt	2 required for shell support bracket to shell
	C000611	Nut	2 required for shell support bracket to shell
	C000567	Screw	4 required for vacuum breaker to valve panel
	C002617P	Single Fan Harness	
	N/A	Nut	4 required for vacuum breaker to valve panel; Models starting 3/23/04
	F431024	Nut	4 required for vacuum breaker to valve panel; Models through 3/23/04
1	C000390	Vacuum Breaker Assembly	
2	N/A	Grease Fitting	2 required; Models through 3/23/04
	C000549	Grease Fitting	2 required; Models starting 3/23/04
3	N/A	Grease Coupling	2 required; Models through 3/23/04
	C001789	Connector	2 required; Models starting 3/23/04
4	C000211	Fan	
5	C000317	Circuit Breaker	2 Amp
6	C000210	Fan Filter Guard Assembly	
	F200318900P	Filter	5 pack
7	C000379	Supply Dispenser Hose	
8	C000079	Lower Shell Support Bracket	
9	C002636	Temperature Probe Assembly	
10	225/10004/00	Thermostat Grommet	
11	C002054	Shell Support Brace	Models starting 3/23/04
12	C000780	Frame Assembly	
13	C000378	Water Inlet Hose	

N/A = Part no longer available

© Copyright, Alliance Laundry Systems LLC – DO NOT COPY or TRANSMIT

Main Assembly (Drawing 4 of 8)

Models CP060PMN1, CP060PMQ1, CP060PMX2, CPC60M, IP060PMN1, IP060PMN2, IP060PMQ1, IP060PMX2, IPH60M, IPH270 and JP060PMQ1

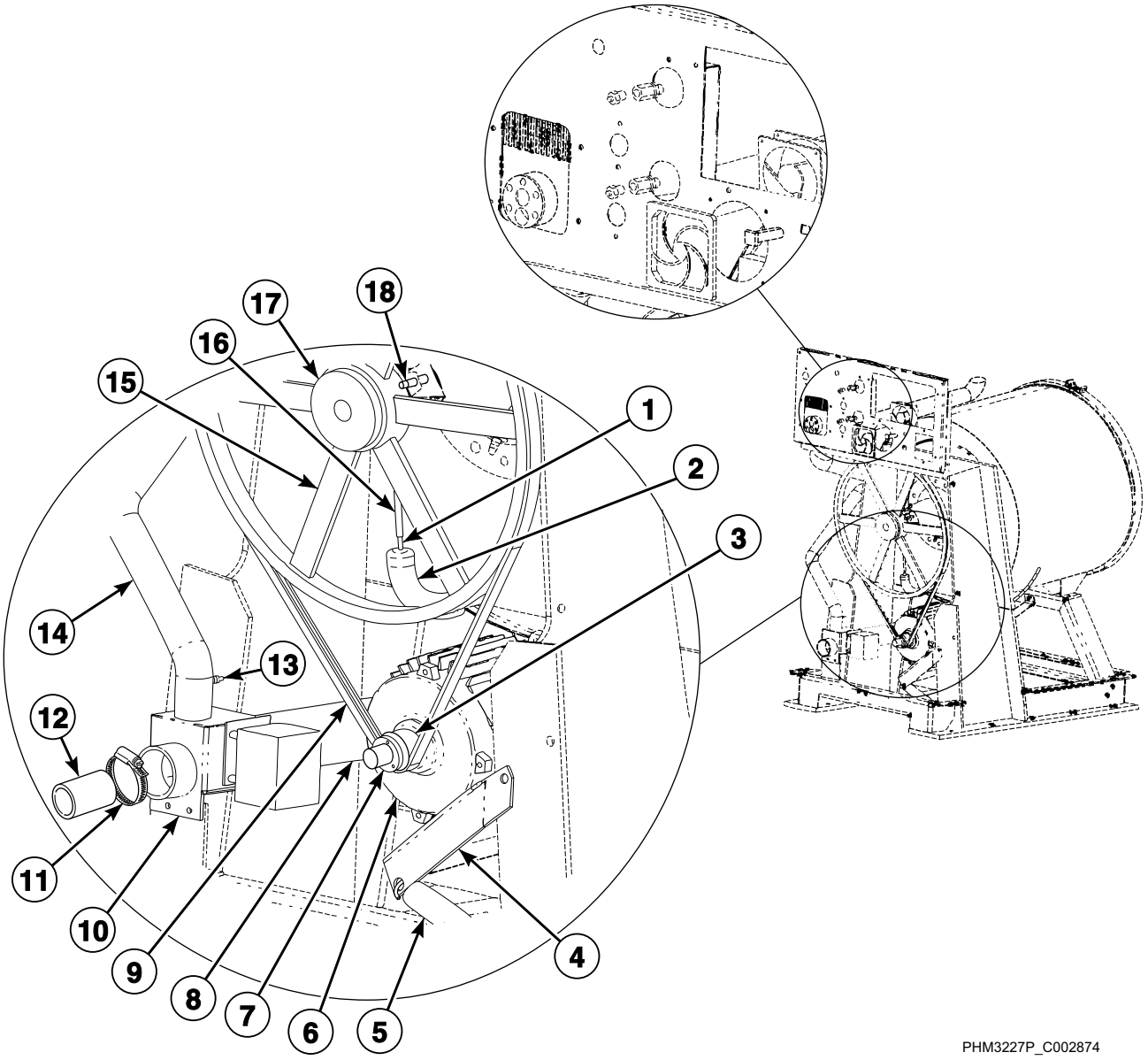

© Copyright, Alliance Laundry Systems LLC – DO NOT COPY or TRANSMIT

Main Assembly (Drawing 4 of 8)

REF	PART NO.	DESCRIPTION	COMMENTS
	C002422	Motor Cable	
	C000304	Motor Cable	
	C002613	Drain Harness	
	C002614P	Drain Harness	
	C002858	Dual Drain Harness	
	F430144	Screw	4 required for motor to motor plate
	C000556	Washer	8 required for motor to motor plate
	803017	Nut	4 required for motor to motor plate
	F430124	Screw	1 required for motor plate to frame
	C000612	Screw	1 required for motor plate to frame for models through 3/23/04; 2 required for motor plate to frame for models starting 3/23/04
	C000177	Washer	1 required for motor plate to frame for models through 3/23/04; As required for motor plate to frame for models starting 3/23/04
	C000583	Washer	2 required for motor plate to frame for models through 3/23/04; 3 required for motor plate to frame for models starting 3/23/04
	90554	Hose Clamp	1 required for air trap
	F200213	Hose Clamp	2 required for overflow hose for models through 3/23/04; 4 required for overflow hose for models starting 3/23/04
	C003295	Drain T	Models starting 3/6/13; Replaces use of C001649 Reducing Connector
	C003315P	Alignment Tool	
1	C000662	Air Trap Tube	Brass
2	C000654	Air Trap Tube Elbow	Rubber
3	C000791P	Motor Pulley	
4	C000130	Motor Bracket	
5	N/A	Belt Tension Spring	Models through 3/23/04
	C001790	Belt Tension Spring	Models starting 3/23/04
6	C000204	Motor	
7	F280233P	Bushing	
8	C000411	Drain Hose	
9	N/A	Belt	Models through 3/23/04
	C001264	Belt	Models starting 3/23/04
10	C003353	Drain Valve	
11	F200201	Hose Clamp	2 required for drain hose
12	F200165100	Drain Hose	No. 56
13	C001649	Reducing Connector	2 required; Models starting 3/23/04 through 3/6/13
14	C000377	Overflow Hose	
15	C000222	Cylinder Pulley	
16	C000599	Vacuum Breaker Hose	
17	C000746	Cylinder Bushing	
18	C002637P	Proximity Switch Assembly	

N/A = Part no longer available

© Copyright, Alliance Laundry Systems LLC – DO NOT COPY or TRANSMIT

Main Assembly (Drawing 5 of 8)

Models CP040PMN1, CP040PMQ1, CP040PMX2, CPC40M, IP040PMN1, IP040PMQ1, IP040PMX2, IPH40M, IPH180 and JP060PMQ1

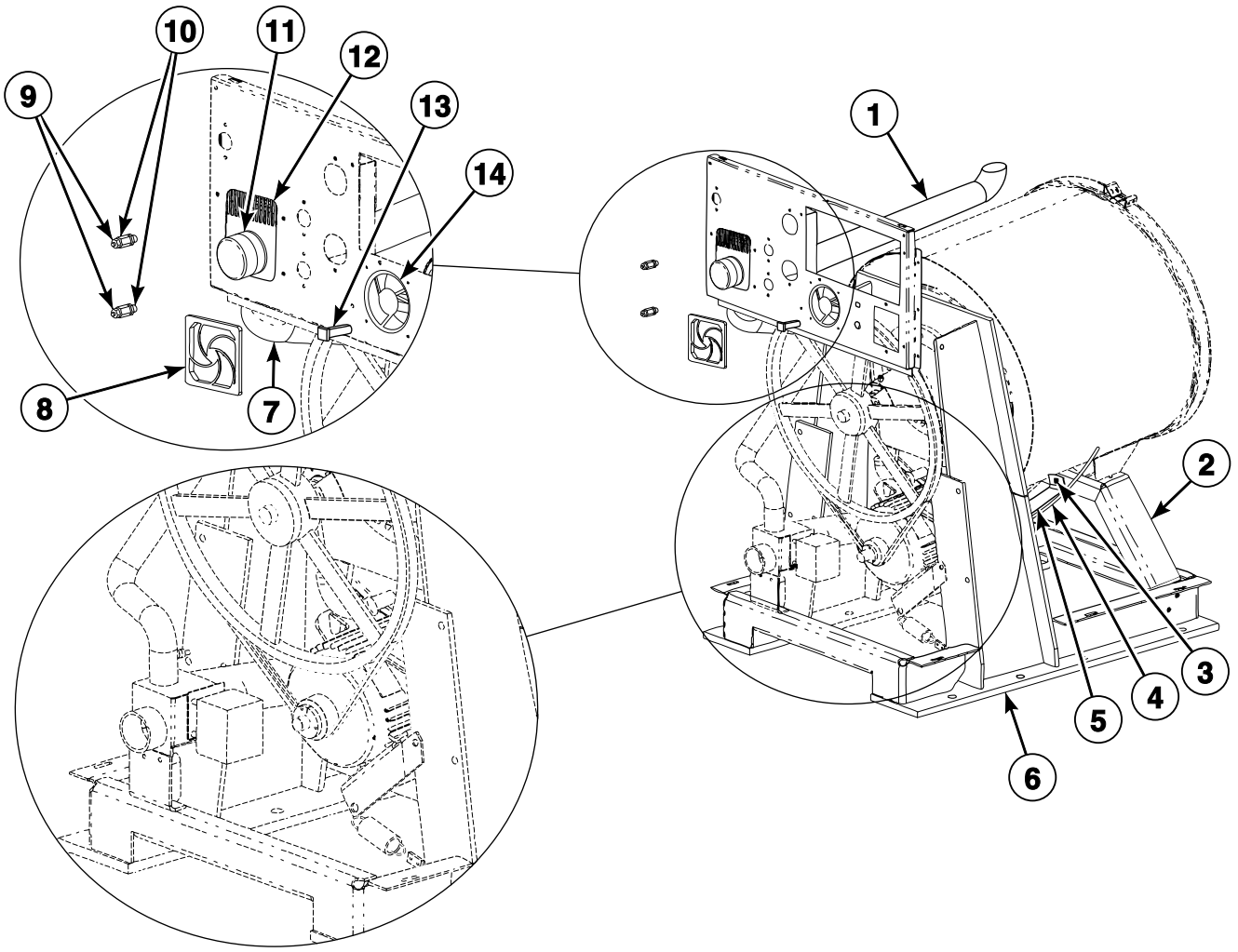

PHM2795P_C002874

© Copyright, Alliance Laundry Systems LLC – DO NOT COPY or TRANSMIT

Main Assembly (Drawing 5 of 8)

REF	PART NO.	DESCRIPTION	COMMENTS
	C000679	Vacuum Breaker Plug	6 required; Models through 3/23/04; Use with old style vacuum breaker
	C000680	Adapter	6 required; Models through 3/23/04; Use with old style vacuum breaker
	C000583	Washer	4 required for shell support bracket to shell
	F200222	Hose Clamp	4 required for inlet valve to vacuum breaker
	F200201	Hose Clamp	2 required for fill inlet hose
	C000552	Hose	Flush hose for vacuum breaker; Models starting 3/23/04
	C000273	Bolt	2 required for shell support bracket to shell
	C000611	Nut	2 required for shell support bracket to shell
	C000567	Screw	4 required for vacuum breaker to valve panel
	N/A	Nut	4 required for vacuum breaker to valve panel; Models starting 3/23/04
1	C000379	Supply Dispenser Hose	
2	C000516	Lower Shell Support Bracket	
3	225/10004/00	Thermostat Grommet	
4	C002636	Temperature Probe Assembly	
5	C002055	Shell Support Brace	
6	C000813	Frame Assembly	
7	C000677	Water Inlet Hose	
8	C000210	Fan Filter Guard Assembly	
	F200318900P	Filter	5 pack
9	N/A	Grease Fitting	2 required; Models through 3/23/04
	C000549	Grease Fitting	2 required; Models starting 3/23/04
10	N/A	Grease Coupling	2 required; Models through 3/23/04
	C001789	Connector	2 required; Models starting 3/23/04
11	C001772	Vacuum Breaker Cover	
12	C000390	Vacuum Breaker Assembly	
13	C000317	Circuit Breaker	2 Amp
14	C000211	Fan	

N/A = Part no longer available

© Copyright, Alliance Laundry Systems LLC – DO NOT COPY or TRANSMIT

Main Assembly (Drawing 6 of 8)

Models CP040PMN1, CP040PMQ1, CP040PMX2, CPC40M, IP040PMN1, IP040PMQ1, IP040PMX2, IPH40M, IPH180 and JP060PMQ1

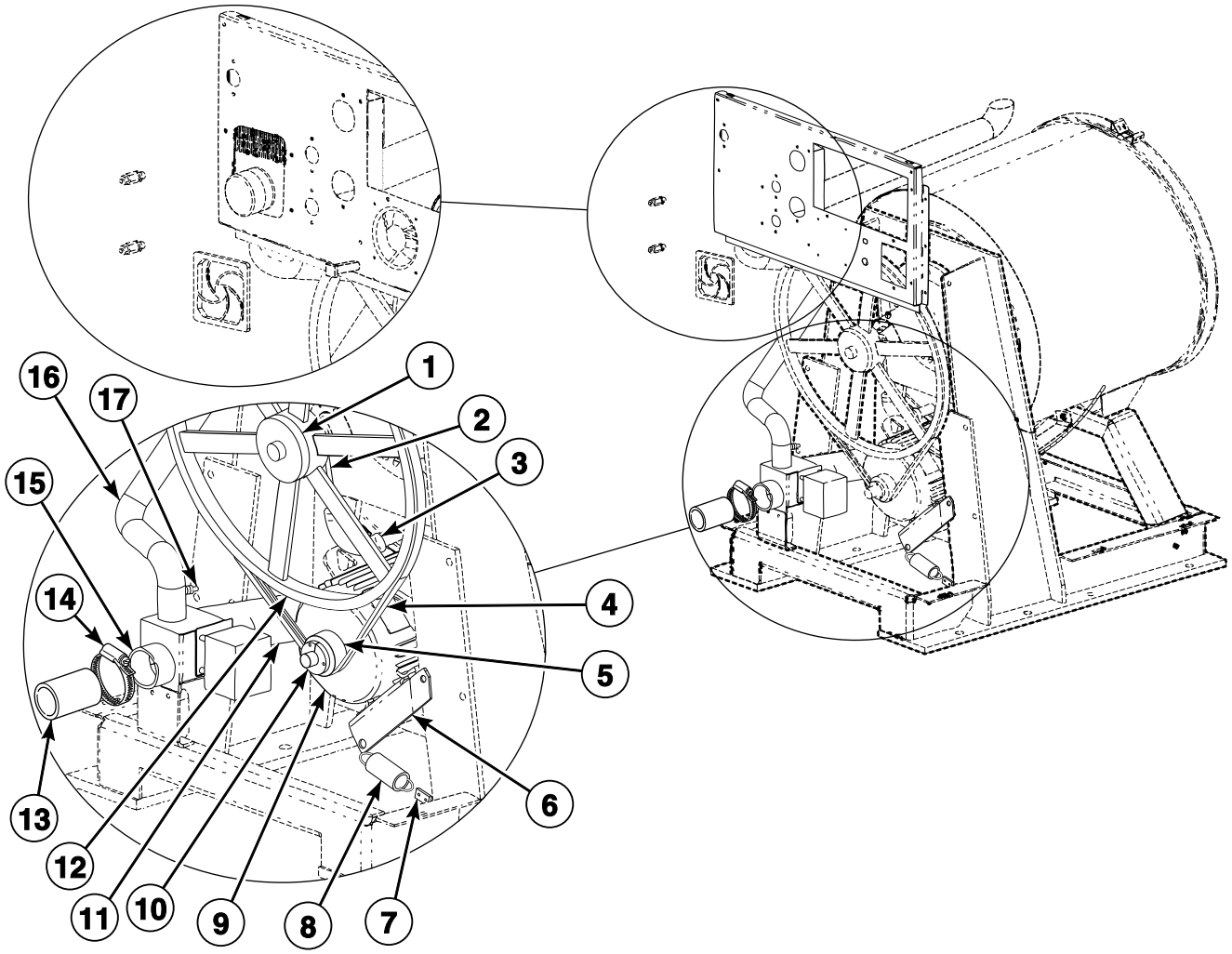

PHM2948P_C002874

© Copyright, Alliance Laundry Systems LLC – DO NOT COPY or TRANSMIT

Main Assembly (Drawing 6 of 8)

REF	PART NO.	DESCRIPTION	COMMENTS
	C000662	Air Trap Tube	Brass
	C002421	Motor Cable	
	C000304	Motor Cable	
	C002613	Drain Harness	
	C002614P	Drain Harness	
	F430144	Screw	4 required for motor to motor plate
	C000556	Washer	8 required for motor to motor plate
	803017	Nut	4 required for motor to motor plate
	F430124	Screw	1 required for motor plate to frame
	C000612	Screw	1 required for motor plate to frame for models through 3/23/04; 2 required for motor plate to frame for models starting 3/23/04
	C000177	Washer	1 required for motor plate to frame for models through 3/23/04; As required for motor plate to frame for models starting 3/23/04
	C000583	Washer	2 required for motor plate to frame for models through 3/23/04; 3 required for motor plate to frame for models starting 3/23/04
	90554	Hose Clamp	1 required for air trap
	F200213	Hose Clamp	2 required for overflow hose for models through 3/23/04; 4 required for overflow hose for models starting 3/23/04
	C003295	Drain T	Models starting 3/6/13; Replaces use of C001649 Reducing Connector
	C003313P	Alignment Tool	
1	C000746	Cylinder Bushing	
2	C000599	Vacuum Breaker Hose	
3	C000654	Air Trap Tube Elbow	Rubber
4	C001053	Belt	
5	C001051P	Motor Pulley	
6	C000689	Motor Bracket	
7	C000994	Spring Clip	
8	N/A	Belt Tension Spring	Models through 3/23/04
	C001790	Belt Tension Spring	Models starting 3/23/04
9	C000204	Motor	
10	F280233P	Bushing	
11	C000411	Drain Hose	
12	C000222	Cylinder Pulley	
13	F200165100	Drain Hose	No. 56
14	F200201	Hose Clamp	2 required for drain hose
15	C003353	Drain Valve	
16	C000676	Overflow Hose	
17	C001649	Reducing Connector	2 required; Models through 3/6/13

N/A = Part no longer available

© Copyright, Alliance Laundry Systems LLC – DO NOT COPY or TRANSMIT

Main Assembly (Drawing 7 of 8)

Models CP040PHN1, CP040PHQ1, CP040PHX2, CPC40H, IP040PHN1, IP040PHN2, IP040PHQ1, IP040PHX2, IPH40H, JP040PHN1 and JP040PHQ1

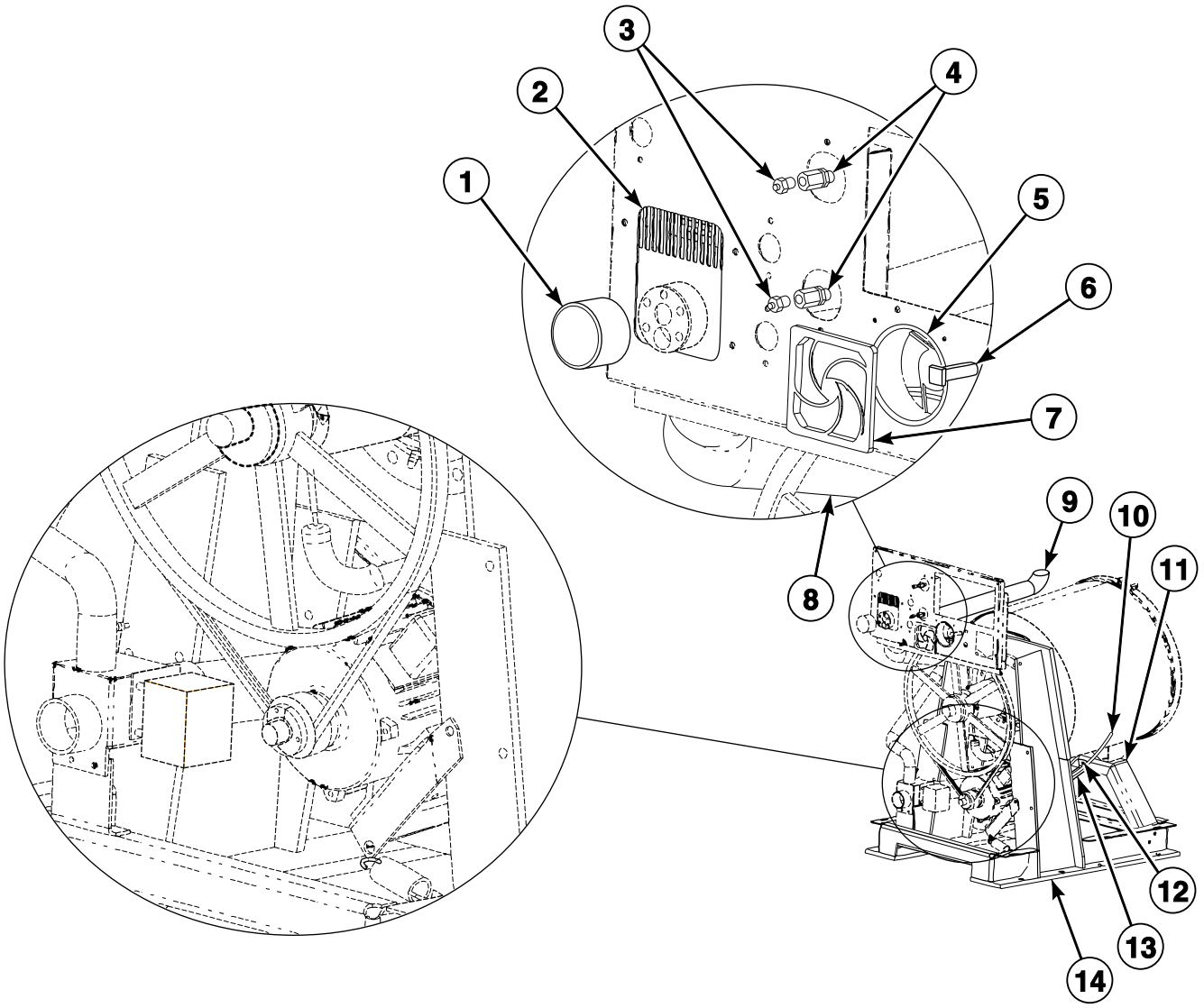

PHM2794P_C002874

© Copyright, Alliance Laundry Systems LLC – DO NOT COPY or TRANSMIT

Main Assembly (Drawing 7 of 8)

REF	PART NO.	DESCRIPTION	COMMENTS
	C000679	Vacuum Breaker Plug	6 required; Models through 3/23/04; Use with old style vacuum breaker
	C000680	Adapter	6 required; Models through 3/23/04; Use with old style vacuum breaker
	C000583	Washer	4 required for shell support bracket to shell
	F200222	Hose Clamp	4 required for inlet valve to vacuum breaker
	F200201	Hose Clamp	2 required for fill inlet hose
	C000552	Hose	Flush hose for vacuum breaker; Models starting 3/23/04
	C000273	Bolt	2 required for shell support bracket to shell
	C000611	Nut	2 required for shell support bracket to shell
	C000567	Screw	4 required for vacuum breaker to valve panel
	N/A	Nut	4 required for vacuum breaker to valve panel; Models starting 3/23/04
	C002617P	Single Fan Harness	
1	C001772	Vacuum Breaker Cover	Models starting 3/23/04
2	C000390	Vacuum Breaker Assembly	
3	N/A	Grease Fitting	2 required; Models through 3/23/04
	C000549	Grease Fitting	2 required; Models starting 3/23/04
4	N/A	Grease Coupling	2 required; Models through 3/23/04
	C001789	Connector	2 required; Models starting 3/23/04
5	C000211	Fan	
6	C000317	Circuit Breaker	2 Amp
7	C000210	Fan Filter Guard Assembly	
	F200318900P	Filter	5 pack
8	C000677	Water Inlet Hose	
9	C000379	Supply Dispenser Hose	
10	C002636	Temperature Probe Assembly	
11	C000516	Lower Shell Support Bracket	Models starting 3/23/04
	C000988	Lower Shell Support Bracket	Electric heat models starting 3/23/04
12	225/10004/00	Thermostat Grommet	
13	C002055	Shell Support Brace	Models starting 3/23/04
14	C000445	Frame Assembly	

N/A = Part no longer available

© Copyright, Alliance Laundry Systems LLC – DO NOT COPY or TRANSMIT

Main Assembly (Drawing 8 of 8)

Models CP040PHN1, CP040PHQ1, CP040PHX2, CPC40H, IP040PHN1, IP040PHN2, IP040PHQ1, IP040PHX2, IPH40H, JP040PHN1 and JP040PHQ1

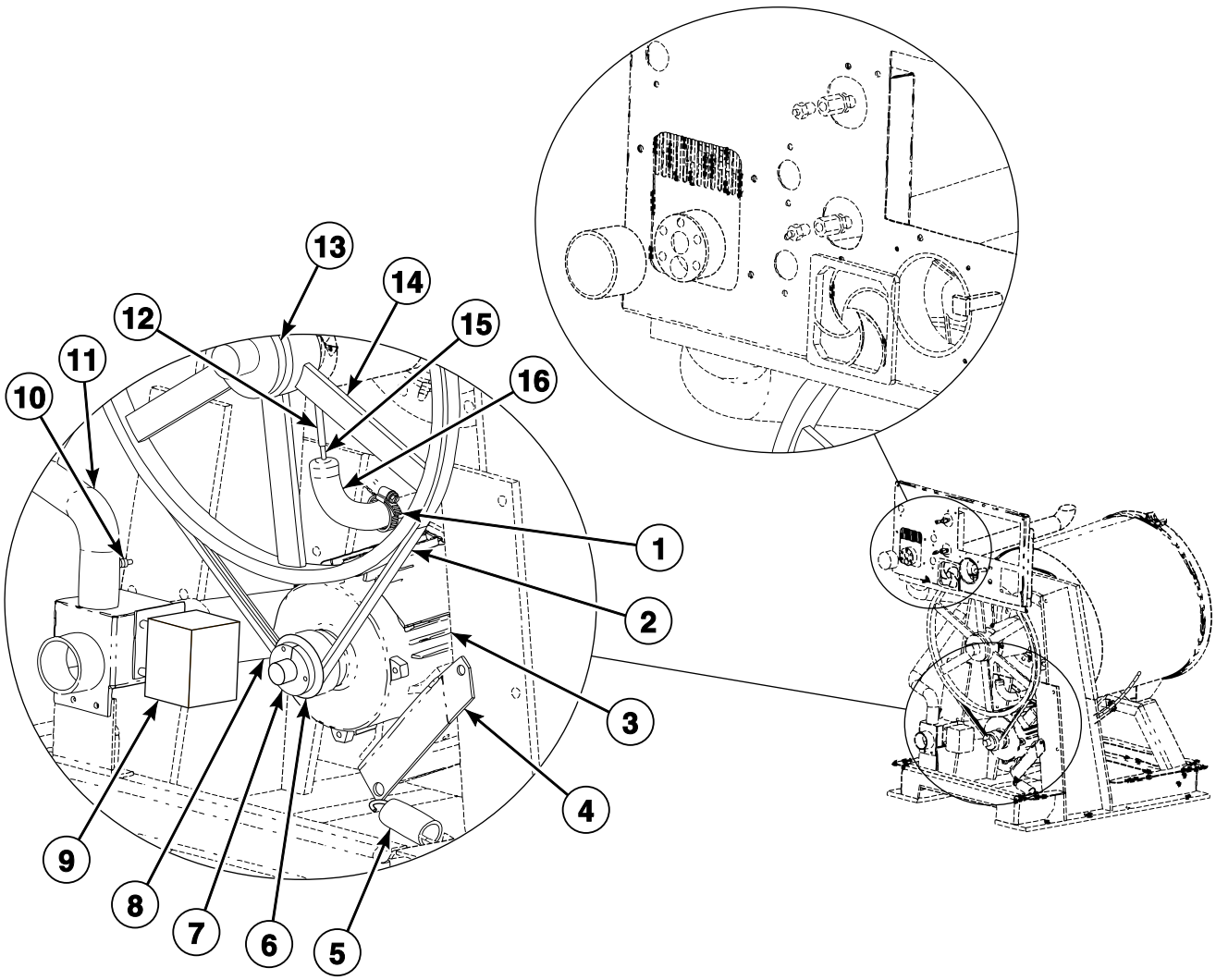

PHM2947P_C002874

© Copyright, Alliance Laundry Systems LLC – DO NOT COPY or TRANSMIT

Main Assembly (Drawing 8 of 8)

REF	PART NO.	DESCRIPTION	COMMENTS
	C002421	Motor Cable	
	C000304	Motor Cable	
	C000994	Spring Clip	
	C002613	Drain Harness	
	C002614P	Drain Harness	
	F430144	Screw	4 required for motor to motor plate
	C000556	Washer	8 required for motor to motor plate
	803017	Nut	4 required for motor to motor plate
	F430124	Screw	1 required for motor plate to frame
	C000612	Screw	1 required for motor plate to frame for models through 3/23/04; 2 required for motor plate to frame for models starting 3/23/04
	C000177	Washer	1 required for motor plate to frame for models through 3/23/04; As required for motor plate to frame for models starting 3/23/04
	C000583	Washer	2 required for motor plate to frame for models through 3/23/04; 3 required for motor plate to frame for models starting 3/23/04
	90554	Hose Clamp	1 required for air trap
	F200213	Hose Clamp	2 required for overflow hose for models through 3/23/04; 4 required for overflow hose for models starting 3/23/04
	F200201	Hose Clamp	2 required for drain hose
	C003295	Drain T	Models starting 3/6/13; Replaces use of C001649 Reducing Connector
	C003314P	Alignment Tool	
1	20391	Hose Clamp	
2	C001053	Belt	
3	C000204	Motor	
4	C000689	Motor Bracket	
5	N/A	Belt Tension Spring	Models through 3/23/04
	C001790	Belt Tension Spring	Models starting 3/23/04
6	C000690P	Motor Pulley	
7	C000691P	Motor Bushing	
8	C000411	Drain Hose	
9	C003353	Drain Valve	
10	C001649	Reducing Connector	Models starting 3/23/04 through 3/6/13
11	C000676	Overflow Hose	
12	C000552	Hose	
13	C000223P	Cylinder Bushing	
14	C000222	Cylinder Pulley	
15	C000662	Air Trap Tube	Brass
16	C000654	Air Trap Tube Elbow	Rubber

N/A = Part no longer available

© Copyright, Alliance Laundry Systems LLC – DO NOT COPY or TRANSMIT

Notes

© Copyright, Alliance Laundry Systems LLC – DO NOT COPY or TRANSMIT

Parts Index

A

Adapter
C000424 ..... 55, 57, 59
C000680 ..... 91, 95, 99, 103

Air Trap Tube
C000662 ..... 93, 97, 101, 105
C001232 77

Air Trap Tube Elbow
C000654 ..... 93, 97, 101, 105

Alignment Tool
C003313P 101
C003314P 105
C003315P 97
C003316P 93

Auxiliary Plumbing Assembly
C001187 63

B

Battery
209/00505/04P 35

Bearing Housing
C000057 15
C000725 19

Bearing Housing Assembly
C000058P 15, 17, 23
C000728P 19, 21, 25
C001364P 17, 23
C002032P 25

Bearing Housing Puller Kit
1390P 17, 21, 23, 25
1390-1 ..... 17, 21, 23, 25

Bearing Lubrication Decal
C000508 ..... 9, 13

Belt
C001053 ..... 93, 101, 105
C001264 97

Belt Tension Spring
C001790 ..... 97, 101, 105
C001800 93

Blind Rivet
J1111905 53

Bolt
C000180 ..... 43, 45, 47, 49
C000273 ..... 71, 73, 75, 77, 91, 95, 99, 103
C000430 ..... 51, 53
C000559 ..... 43, 45, 47, 49
C000561 ..... 43, 45, 47, 49, 51, 53, 71, 73, 75, 77
C001785 ..... 43, 45, 47, 49
F8549301 ..... 43, 45, 47, 49

Bushing
F280233P 93, 97, 101

C

Cap
C001793 93

Carb Bearing
C000151 15
C000485 19

Chemical Supply Controller
C000371P 35

Chemical Supply Harness
C002779 79
C002780 79
C002781 79

Circuit Breaker
C000317 ..... 91, 95, 99, 103
C003135P 79, 81
F350217 ..... 79, 81

Circuit Breaker Kit
C0977P3 ..... 79, 81
C0978P3 ..... 79, 81

Clean Filter Daily Decal
F200061000 13

Coil
F8514701 ..... 55, 57, 59, 61, 63, 67, 69

Cold Plumbing Assembly
C000425 59
C001106 61

Cold Water Valve Decal
F0231368-00 9

Connector
C001789 ..... 91, 95, 99, 103
J1408004 ..... 15, 17, 19, 21, 23, 25

Contact Base
F8538101 27

Contact Block Switch
F200233401 27
F200233401P 27, 29

Contactor
C000308P 81
C000309P 81

Control Module Harness
C000865 35

Control Panel Decal
C001069 35
C001276 35
C001389 35

Control Panel Insert
C000483 ..... 27, 29
C000484 ..... 27, 29

Coupling
C000420 ..... 55, 57

Cover Decal
F200318200 ..... 9, 11

Cylinder Assembly Kit
C000037P 37
C000455P 37
C000792P 37
C000812P 37

Cylinder Bolt Shroud
C001238 37

Cylinder Bushing
C000223P 93, 105
C000746 ..... 97, 101

Cylinder Lifter Rod
C001327 37

N/A items do not appear in index.

© Copyright, Alliance Laundry Systems LLC – DO NOT COPY or TRANSMIT

Cylinder Pulley
C000222 ..... 93, 97, 101, 105
Cylinder Shaft
C000068 15
C000726 19

D

Diaphragm and Guide Kit
G582P3 ..... 55, 57, 59
DIN Coil
F380986P 55, 57, 59, 61, 63, 67, 69
F380987P 55, 57, 59, 61
DIN Valve Adapter Kit
F8382301 ..... 55, 57, 59, 61, 63, 67, 69
DIN Valve Kit
F8521601 ..... 67, 69
Dispenser Assembly
C000107 41
Dispenser Door Handle
C001788 ..... 39, 41
Door
C000523 ..... 45, 49
Door Assembly
C000077 ..... 43, 47
C000524 ..... 45, 49
C002726 ..... 43, 47
Door Bumper
C001546 ..... 43, 45, 47, 49
Door Gasket
C000521P 45, 49
C003285 ..... 43, 47
Door Glass
C000191 ..... 43, 47
C000520P 45, 49
Door Glass Gasket
C000190 ..... 43, 47
C000522 ..... 45, 49
Door Glass Retainer
C000519 ..... 45, 49
C000603 ..... 43, 47
Door Handle
C001679P 43, 45, 47, 49
Door Handle Bushing
C000181 ..... 43, 45, 47, 49
Door Handle Hinge Weldment
C000470 ..... 43, 45, 47, 49
Door Handle Spring Bushing
C000192 ..... 43, 45, 47, 49
Door Handle Torsion Spring
C001786 ..... 43, 45, 47, 49
Door Hinge
C000604 ..... 43, 47
C000681 ..... 45, 49
Door Hinge Bushing
C000176 ..... 43, 45, 47, 49
Door Latch
C001244 ..... 51, 53
Door Lock Catch
C000185 ..... 51, 53
Door Lock Cover
C000688 ..... 51, 53
Door Lock Harness
C000867P 51, 53
Door Lock Kit
C002996M 51, 53
Door Lock Microswitch
C000278 ..... 51, 53
Door Lock Plate
C000684 ..... 51, 53
Door Lock Slide Spring
C000276 ..... 51, 53
Door Lock Solenoid
F8654101 ..... 51, 53
Door Lock Solenoid Bracket
C003022 ..... 51, 53
Door Lock Spring
B12351001 53
Door Lock Spring Cover
C000687 ..... 51, 53
Door Lock Switch Slide
C000271 ..... 51, 53
Door Magnet Mounting Bracket
C002994 ..... 47, 49
Door Release Decal
C000694 ..... 11, 13
Drain Elbow Hose
F8617701 93
Drain Harness
C002613 ..... 93, 97, 101, 105
C002614P 93, 97, 101, 105
Drain Hose
C000411 ..... 93, 97, 101, 105
F200165100 ..... 93, 97, 101
Drain T
C003295 ..... 93, 97, 101, 105
Drain Valve
C003353 ..... 93, 97, 101, 105
Drive Box Assembly
C001050 ..... 79, 81
Drive Kit, 160-Series to PowerFlex 40
C003031 87
C003033 87
C003035 87
C003037 87
C003039 87
C003041 87
C003043 87
C003045 87
Dual Drain Harness
C002858 ..... 93, 97

E

Electric Heat Control Harness
C003020 79
Electric Heat Harness
C002724 75
C002755 75
C002756 75
C002758 75
C002830 75
Electric Heat Shell Assembly
C000949 75
C000950 77

N/A items do not appear in index.

© Copyright, Alliance Laundry Systems LLC – DO NOT COPY or TRANSMIT

Electric Shock Danger Label
F8115501 13
Electrical Shock Label
D502511 11
Emergency Stop Button Kit
F200233700P 27
Emergency Stop Pushbutton
F200233500 ..... 27, 29
EMI Filter
F330280P 83, 85
F330281 ..... 83, 85
F8053901P 87, 89
F8053902 ..... 87, 89
Exhaust Bracket
C000323 ..... 79, 81
External Supply Connection Decal
F230917-1 9
F8150201 13

F

Fan
C000211 ..... 91, 95, 99, 103
Fan Filter Guard Assembly
C000210 ..... 91, 95, 99, 103
Fill Hose
F200116 65
Filter
F200318900P 91, 95, 99, 103
F270305 65
F270306P 65
Filter Housing Cap Gasket
F270407 65
Flange and Nipple Assembly
C001366 ..... 55, 57, 59, 61, 63
Frame Assembly
C000445 103
C000780 95
C000813 99
Front Cover
C000606 41
Front Electrical Enclosure
C000213 35
Front Electrical Enclosure Assembly
C000432 35
Front Electrical Enclosure Cover
C000348 35
Front Electrical Enclosure Rail
C000218 33
C000533 31
Front Grease Shield
C000729 19
Front Panel
C001246 27
C001248 29
Front Panel Assembly
C002966 27
C002967P 27
C002968 29
C002969 29
Front Skirt Panel
C000314 33
C000530 31
Front Supply Dispenser Nozzle
C001017 ..... 39, 41
Fuse
C001194 81
C001196 81
Fuse Holder
C001197 81

G

Gasket
C001704 ..... 15, 19
Grease Connector Box
C000539 ..... 31, 33
Grease Fitting
C000549 ..... 91, 95, 99, 103
Grease Shield
C000064 15

H

Hardware Kit
C002023 ..... 17, 21, 23, 25
Harness
C003028 87
Heating Element
209/00562/30 ..... 75, 77
Hinge
C001787 ..... 39, 41
Hinge Block
C000175 ..... 43, 45, 47, 49
Hose
C000552 ..... 15, 17, 19, 21, 23, 25, 39, 41, 91, 95, 99, 103, ... 105
Hose Barb
F421951 ..... 55, 57, 59, 61, 63
Hose Clamp
F200201 ..... 15, 23, 39, 41, 91, 93, 95, 97, 99, 101, 103, 105
F200213 ..... 93, 97, 101, 105
F200222 ..... 91, 95, 99, 103
20391 105
36801 ..... 15, 17, 19, 21, 23, 25, 41
90554 ..... 93, 97, 101, 105
Hot Plumbing Assembly
C000426 55
C001664 57
Hot Surface Warning Decal
F200085000 ..... 9, 11, 13
F231380 11
Hot Surface Warning Label
F8614301 13
Hot Water and Chemical Caution Decal
F200085300 ..... 9, 13
Hot Water Valve Decal
F0231367-00 9

I

Infrared Cable Kit
210/00902/00P 35

N/A items do not appear in index.

© Copyright, Alliance Laundry Systems LLC – DO NOT COPY or TRANSMIT

Inlet Power Cover
C001257 ..... 31, 33
Inlet Valve Harness
C002608P 57, 61
C002610P 55
C002611P 59
Insert Rail
C000636 29
C001013 27
Inverter
C000287 ..... 83, 85
C000288 ..... 83, 85

J

Jump Wire
C003291 ..... 51, 53

K

Keymode Switch Assembly
C003024P 27, 29
Keypad Controller
C000282P 35

L

Logo Decal
C001038 11
Lower Front Adjustment Bracket Assembly
C002984 27
C002985 29
Lower Shell Support Bracket
C000079 ..... 91, 95
C000516 ..... 99, 103
C000988 103
Lubricator
212/00022/00P 15, 17, 19, 21, 23, 25

M

Magnet
F8390801 ..... 47, 49
Magnetic Door Switch Bracket
C002995 53
Main Board Controller Kit
C000281P 35
Motor
C000204 ..... 97, 101, 105
C000205 93
Motor Bracket
C000130 ..... 93, 97
C000689 ..... 101, 105
Motor Bushing
C000691P 105
Motor Cable
C000304 ..... 93, 97, 101, 105
C002421 ..... 101, 105
C002422 ..... 93, 97
Motor Pulley
C000224 93
C000690P 105
C000791P 97
C001051P 101
Mount On Concrete Warning Label
F8246401 13
Mounting Bracket
C000372 ..... 15, 17, 19, 23
C000373 ..... 79, 81
C000375 35
C001037 ..... 21, 25

N

Nipple
C000999 ..... 67, 69
F420107 ..... 55, 57, 59
Nut
C000063 15
C000487 19
C000560 ..... 43, 45, 47, 49
C000568 ..... 27, 29, 79, 81
C000574 ..... 43, 45, 47, 49, 51, 53
C000576 ..... 51, 53
C000578 ..... 51, 53
C000611 ..... 71, 73, 75, 77, 91, 95, 99, 103
C001236 ..... 43, 45, 47, 49
F431011 37
F431024 ..... 27, 29, 31, 33, 35, 43, 45, 47, 49, 55, 57, 59, 61, 63, 71, 73, 75, 77, 91, 95
F8549401 ..... 43, 45, 47, 49
803017 ..... 43, 45, 47, 49, 93, 97, 101, 105

O

Overflow Hose
C000377 ..... 93, 97
C000676 ..... 101, 105
Overflow T-Drain Assembly
C000971 93

P

Pinched Fingers Label
D502506 11
Plate
C001916 ..... 15, 19
Pop Rivet
F431215 53
F431223 ..... 47, 49
Power Block Terminal
C000290 79
C000370 ..... 79, 81
Power Distribution Block
M413865 81
PowerFlex 40 Drive
C003032 89
C003034 89
C003036 89
C003038 89
C003040 89

N/A items do not appear in index.

© Copyright, Alliance Laundry Systems LLC – DO NOT COPY or TRANSMIT

C003042 89
C003044 ..... 87, 89
C003046 ..... 87, 89
Programming Key
1242 ..... 27, 29
Proximity Switch Assembly
C002637P 15, 17, 19, 21, 23, 25, 93, 97
Push Decal
F230303 ..... 11, 13

R

RC Network Assembly
C002999 35
RC Network Filter
F330217P 35
Rear Electrical Enclosure Cover
C000173 ..... 31, 33
Rear Enclosure Harness
C000866 79
Rear Grease Shield
C000730 19
Rear Panel
C000051 33
C000525 31
Reducing Connector
C001649 ..... 15, 17, 19, 21, 23, 25, 93, 97, 101, 105
Reed Switch Assembly
C003000 53
Replacement Filter
F270405 65
F270406 65
Roller Bearing
C000152 15
C000486 19
Rub Rail
C000633 29
C001012 27

S

Screw
C000145 ..... 15, 17, 23
C000567 ..... 27, 29, 31, 33, 35, 51, 53, 55, 57, 59, 61, 63, 79, 81, 91, 95, 99, 103
C000572 ..... 51, 53
C000575 ..... 79, 81
C000612 ..... 51, 53, 93, 97, 101, 105
C000613 ..... 51, 53
C000614 ..... 51, 53
C001018 ..... 15, 17, 19, 21, 23, 25
C001019 ..... 19, 21, 25
C001032 ..... 43, 45, 47, 49, 73, 75, 77
C001093 37
C001148 ..... 39, 41
C001294 37
C001856 ..... 71, 73, 75, 77
F430124 ..... 93, 97, 101, 105
F430144 ..... 93, 97, 101, 105
F430909 ..... 35, 39, 41, 79, 81
F430910 ..... 27, 29, 35
F430920 ..... 39, 41
F430925 ..... 39, 41
F430929 ..... 15, 17, 19, 21, 23, 25, 31, 33
F430935 ..... 55, 57, 59, 61, 63
F430938 ..... 79, 81
70391101 71
81398 ..... 51, 53
Seal Plate
C000065 ..... 15, 19
C000066 ..... 15, 19
C000158 15
C000727 19
Shell Assembly
C000518 71
Shell Band and Clamp Weldment
C000659 ..... 73, 77
C001735 ..... 71, 75
Shell Front Assembly
C002975 ..... 71, 75
C002976P 73, 77
Shell Front Gasket
C001762 ..... 71, 75
C001763P 73, 77
Shell Front Gasket Kit
F8513501 ..... 43, 47
Shell Gasket Shield
F601216 ..... 73, 77
Shell Support
C000093 73
Shell Support Brace
C002054 ..... 91, 95
C002055 ..... 99, 103
Side Panel and Stiffener Assembly
C002695 31
C002696 31
C002707 33
C002708 33
Single Dispenser Assembly
C000220 39
Single Fan Harness
C002617P 95, 103
Single Front Dispenser Cover
C000605 39
Siphon Tube
C001007 ..... 39, 41
Spin Warning Decal
F200085100 ..... 9, 13
Spring
C000431 ..... 51, 53
Spring Clip
C000994 ..... 101, 105
Spring Hose Clamp
C001004 41
Standoff
C000376 35
Steam Cord Assembly
C002748P 67, 69
Steam Hose
C000736 69
C000775 67
Steam Hose Insulation
C001003 ..... 67, 69
Steam Injector Tube Assembly
F83638201 69
F8368201 67

N/A items do not appear in index.

© Copyright, Alliance Laundry Systems LLC – DO NOT COPY or TRANSMIT

Steam Option Assembly
C001002 69
C001009 67
Steam Valve Mounting Bracket
C000981 ..... 67, 69
Steam Valve Mounting Flange
C000733 ..... 67, 69
Street Elbow
F420502 ..... 55, 57, 59, 61
F421703 ..... 67, 69
Stud
C000601 ..... 43, 45, 47, 49
Supply Dispenser Cup
C000052 ..... 39, 41
C000053 41
Supply Dispenser Hose
C000379 ..... 91, 95, 99, 103
Supply Signal Decal
C000506 9

T

Tee
F420403 ..... 55, 57, 59
Temperature Probe Assembly
C002636 ..... 91, 95, 99, 103
Thermostat
C000318 ..... 79, 81
Thermostat Grommet
225/10004/00 ..... 91, 95, 99, 103
Tie Wrap Mounting Clamp
F140602 79
Tilt Switch Assembly
C002642P 35
Top Panel
C000050 29
C000513P 27
Transformer
C000203 ..... 79, 81
Trim Gasket
C000629 ..... 27, 29
Triple Lip Seal
C002959 ..... 15, 17, 19, 21, 23, 25
Tubing
C000628P 15, 17, 19, 21, 23, 25

V

Vacuum Breaker Assembly
C000390 ..... 91, 95, 99, 103
Vacuum Breaker Cover
C001772 ..... 95, 99, 103
Vacuum Breaker Hose
C000599 ..... 71, 73, 93, 97, 101
Vacuum Breaker Plug
C000679 ..... 91, 95, 99, 103
Valve
C000716P 57
F8322802 ..... 67, 69
F8322909P 55, 57, 59, 61, 63
Valve Kit
F8379501P 67, 69
Valve Panel Assembly
C002979 31
C002980 33
Valve Rebuild Kit
F8379504 ..... 55, 57, 59, 61, 63
V-Ring Seal
C000069 ..... 15, 19
C000070 15
C000731 19

W

Warning Label
D500049 11
F8233501 13
44324001 13
Washer
C000071 15
C000147 ..... 15, 17, 19, 21, 23, 25
C000177 ..... 43, 45, 47, 49, 93, 97, 101, 105
C000488 19
C000556 ..... 93, 97, 101, 105
C000571 ..... 15, 17, 19, 21, 23, 25, 27, 29, 31, 33, 35, 51, 53, 55, 57, 59, 61, 63, 79, 81
C000583 ..... 37, 71, 73, 75, 77, 91, 93, 95, 97, 99, 101, 103, 105
C000585 ..... 27, 29, 31, 33, 55, 57, 59, 61, 63
C000590 ..... 71, 73, 75, 77
C001239 37
F0431159-00 37
F431133 ..... 35, 79, 81
803615 65
Water Hose
F200128P 55, 57, 59, 61, 63
F200164 65
F200165 65
F200166 65
Water Inlet Hose
C000378 ..... 91, 95
C000677 ..... 99, 103
Water Line Caution Decal
F230734 9
Water Valve
C000436P 55, 59
Water Valve Repair Kit
F380991P 55, 57, 59, 61, 63

N/A items do not appear in index.

© Copyright, Alliance Laundry Systems LLC – DO NOT COPY or TRANSMIT