Washer-Extractor

Refer to Page 5 for Model Numbers

Parts

Alliance™ Laundry Systems

www.alliancelaundry.com

Part No. D0244R9
April 2018

Table of Contents

Title	Page
Parts Ordering Information	3
Serial Plate Location	3
Model Identification	5
Washer-Extractor Product Overview	6
Frame	8
Bearing Housing	10
Shell and Basket	12
Basket, Pulley and Belt	14
Motor with Built-In Tightening Bracket - Models without Inverter Drive	16
Motor - Models without Inverter Drive	18
Motor - Models with Inverter Drive (Drawing 1 of 2)	20
Motor - Models with Inverter Drive (Drawing 2 of 2)	22
Drain Plumbing	24
Drain Valve	26
Door Lock - Models Through 1997	28
Door Lock - Models Starting 1998	30
Door	32
Door Handle (Drawing 1 of 2)	34
Door Handle (Drawing 2 of 2)	36
Control Panel - Micro-20	38
Control Panel - Sigma	40
Control Panel - PS40F	42
Control Panel - PS40	44
Control Panel - PC30	46
Control Panel - 10-Button Mechanical Timer	48
Control Panel - 5-Button Mechanical Timer	50
Electrical Component Mounting Plate - Micro 20 with Inverter Drive	52
Electrical Component Mounting Plate - Micro 20 without Inverter Drive	54
Electrical Component Mounting Plate - Mechanical Timer	56
Electrical Component Mounting Plate - PC30, PS40 and PS40F	58
Coin Vault	60
Coin Meter (Drawing 1 of 2)	62
Coin Meter (Drawing 2 of 2)	64
Right Side, Front, Lower Rear and Top Panels	66
Left Side, Lower Front and Upper Back Panels	68
Upper Back Panel (Drawing 1 of 2)	70
Upper Back Panel (Drawing 2 of 2)	72
Inverter Drive	74
Supply Dispenser - Models Through 12/31/92 with 1.5 Inch Supply Dispenser Hose	76
Supply Dispenser - *Models Through 12/31/92 with 4 Inch Supply Dispenser Hose	78
Supply Dispenser - Models Starting 1/1/93	80

© Copyright 2018, Alliance Laundry Systems LLC

All rights reserved. No part of the contents of this book may be reproduced or transmitted in any form or by any means without the expressed written consent of the publisher.

Micro 20 Control Panel Decal (Drawing 1 of 5) 82
Micro 20 Control Panel Decal (Drawing 2 of 5) 84
Micro 20 Control Panel Decal (Drawing 3 of 5) 86
Micro 20 Control Panel Decal (Drawing 4 of 5) 88
Micro 20 Control Panel Decal (Drawing 5 of 5) 90
Mechanical Timer Control Panel Decal (Drawing 1 of 2) 92
Mechanical Timer Control Panel Decal (Drawing 2 of 2) 94
Electric and Steam Heating 96
Soap Pump - Knight 98
Soap Pump - Brightwell 100
Parts Index 103

© Copyright, Alliance Laundry Systems LLC – DO NOT COPY or TRANSMIT

Parts Ordering Information

If literature or replacement parts are required, contact the source from whom the machine was purchased or contact Alliance Laundry Systems at (920) 748-3950 for the name and address of the nearest authorized parts distributor.

For technical assistance, call the number listed below:

(920) 748-3121 Ripon, Wisconsin

Serial Plate Location

When calling or writing about your product, be sure to mention model and serial numbers. Model and serial numbers are located on serial plate(s).

© Copyright, Alliance Laundry Systems LLC – DO NOT COPY or TRANSMIT

Notes

© Copyright, Alliance Laundry Systems LLC – DO NOT COPY or TRANSMIT

Model Identification

Information in this manual is applicable to these washer-extractor models:

CWE050AN2
CWE050ANM
CWE050MC2
CWE050MCM
CWE050MD2
CWE050MDM
CWE050ME2
CWE050MEM
CWE050ML2
CWE050MLM
CWE050MN2
CWE050MNM
CWE050MX2
CWE050MXM
CWE050MY2
CWE050MYM
CWE234AN2
CWE234MC2
CWE234MD2
CWE234ME2
CWE234ML2
CWE234MN2
CWE234MX2
CWE234MY2

IWE050AN2
IWE050ANM
IWE050MC2
IWE050MCM
IWE050MD2
IWE050MDM
IWE050ME2
IWE050MEM
IWE050ML2
IWE050MLM
IWE050MN2
IWE050MNM
IWE050MX2
IWE050MXM
IWE050MY2
IWE050MYM
IWE050SC2
IWE050SCM
IWE050SD2
IWE050SDM
IWE050SE2
IWE050SEM
IWE050SL2
IWE050SLM
IWE050SR2
IWE050SRM
IWE050SX2
IWE050SXM
IWE050SY2
IWE050SYM

IWE234AN2
IWE234MC2
IWE234MD2
IWE234ME2
IWE234ML2
IWE234MN2
IWE234MX2
IWE234MY2
IWE234SC2
IWE234SD2
IWE234SE2
IWE234SL2
IWE234SR2
IWE234SX2
IWE234SY2

WE234_CAM-TIMER
WE234_MICRO-20
WE234_PC30
WE234_PS40
WE234_PS40F
WE234_SIGMA

© Copyright, Alliance Laundry Systems LLC – DO NOT COPY or TRANSMIT

Washer-Extractor Product Overview

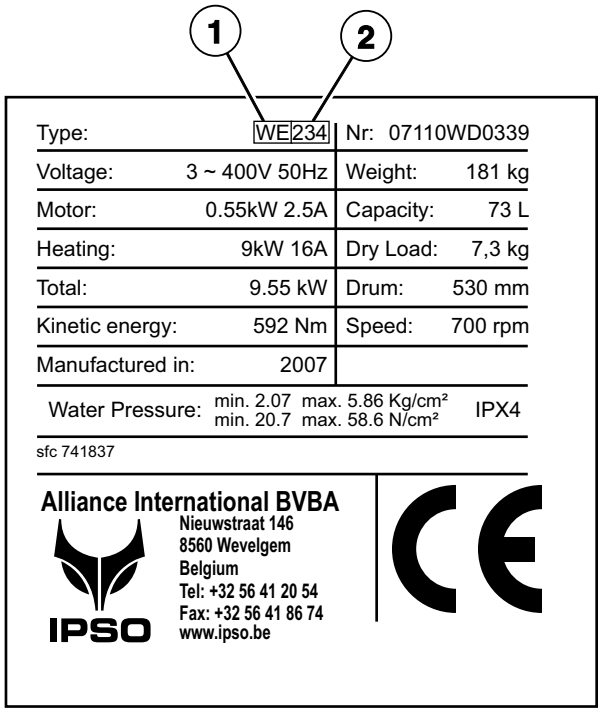

Label 1

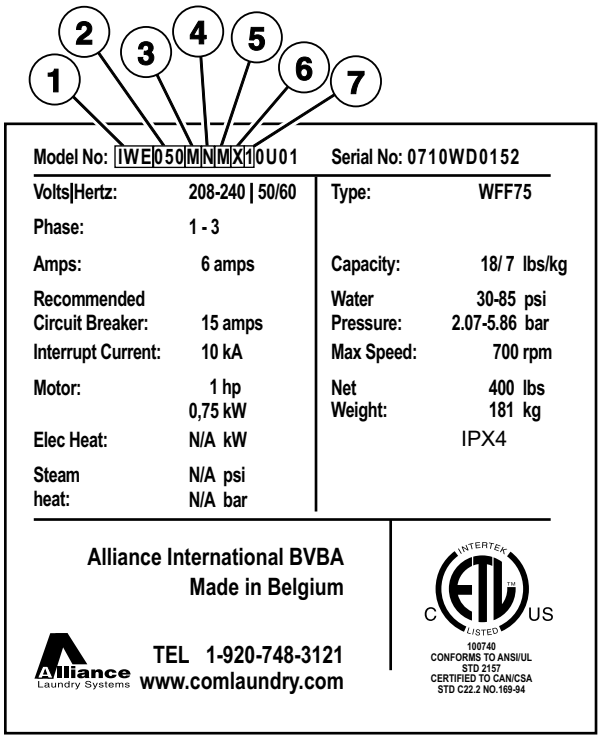

Label 2

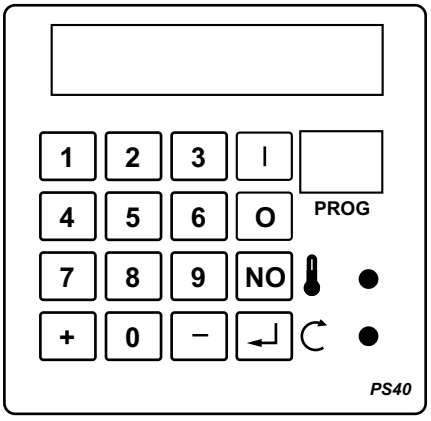

PS40

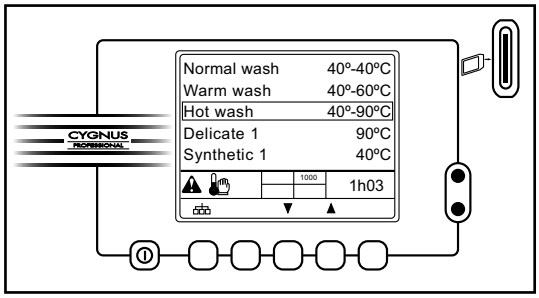

Cygnus Professional

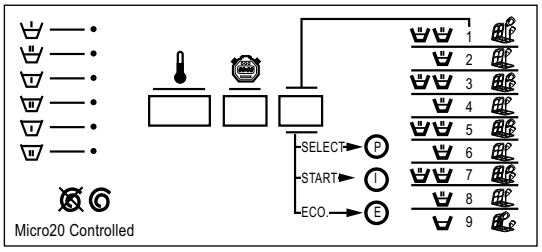

Micro 20

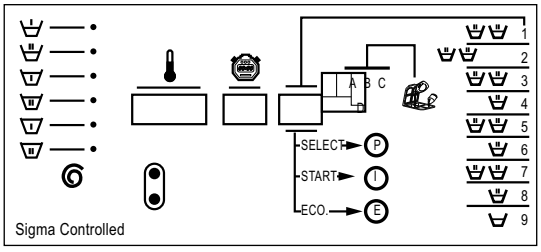

Sigma

CHM3149P_D0244

© Copyright, Alliance Laundry Systems LLC – DO NOT COPY or TRANSMIT

Washer-Extractor Product Overview

REF	PART NO.	DESCRIPTION	COMMENTS
1	-	Product Family	CWE IWE WE
2	-	Capacity	050 234
3	-	Control	A (PS40F) CAM-Timer M (Micro-20) PC30 PS40 S (Sigma)
4	-	Actuation	C (Coin Drop Meter) D (Dual Coin Drop) E (Electronic Drop) L (Prep for Remote or Central Pay) N (Non-Coin) R (Smart Card Relay) X (Prep for Coin) Y (Card Ready)
5	-	Speed	2 (Normal Spin) M (Medium Spin)
6	-	Voltage	N (440-480/50-60/3/3) P (380-415/50-60/3/3) Q (208-240/50-60/3/3) X (200-240/50-60/1/3)
7	-	Design	1

© Copyright, Alliance Laundry Systems LLC – DO NOT COPY or TRANSMIT

Frame

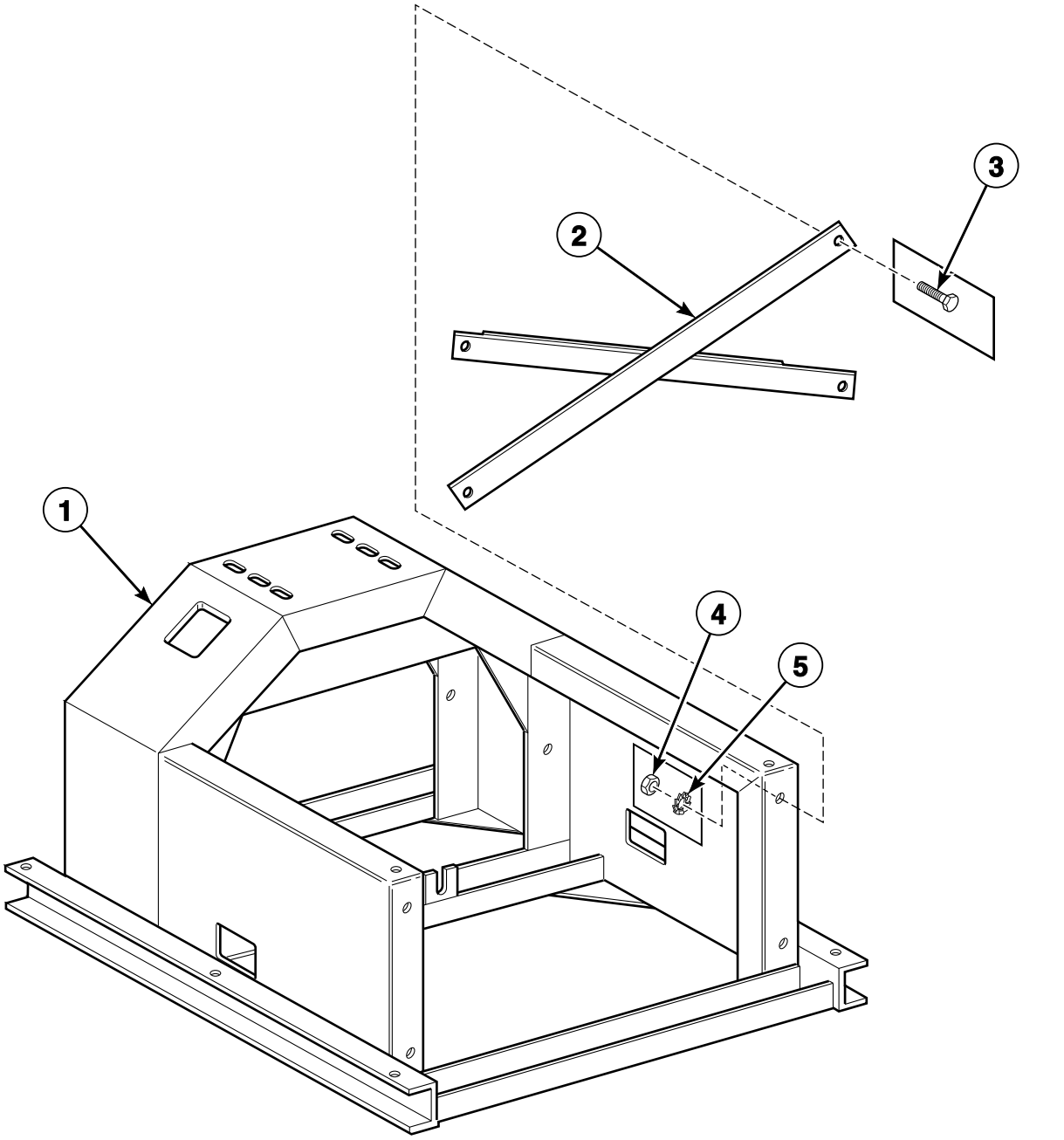

BE000380P_D0244

© Copyright, Alliance Laundry Systems LLC – DO NOT COPY or TRANSMIT

Frame

REF	PART NO.	DESCRIPTION	COMMENTS
1	237/00001/50	Base	36 inches (914 mm) wide; Models without “SL” in the serial number
	240/00001/50	Base	34 inches (864 mm) wide; Models with “SL” in the serial number
2	137/00003/00	Coin Box	
3	206/00003/00	Bolt	
4	204/00002/00	Nut	
5	203/00001/00	Washer	

© Copyright, Alliance Laundry Systems LLC – DO NOT COPY or TRANSMIT

Bearing Housing

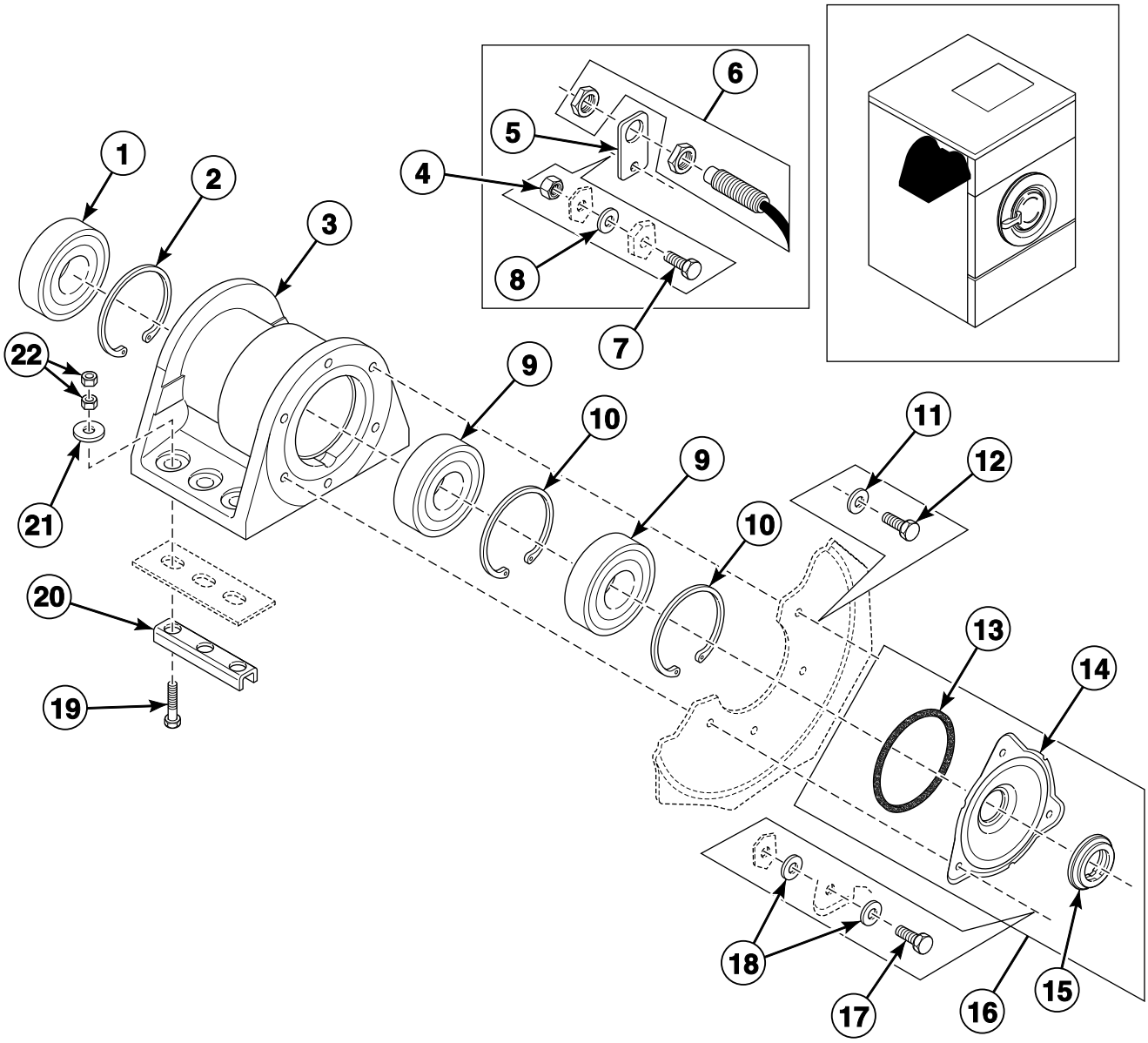

© Copyright, Alliance Laundry Systems LLC – DO NOT COPY or TRANSMIT

Bearing Housing

REF	PART NO.	DESCRIPTION	COMMENTS
	KBRGWE234	Bearing Replacement Kit	
	382P3	Bearing Replacement Tool Kit	
1	212/00024/00	Ball Bearing	
2	212/00037/00	Retainer Ring	
3	212/10104/00	Bearing Housing Assembly	
4	204/00009/00	Nut	
5	152/00052/00	Speed Detector Assembly Plate	
6	209/00400/00	Speed Detector	
7	205/00115/00	Bolt	
8	201/00007/00	Washer	
9	212/00004/00	Ball Bearing	
10	212/00006/00	Retainer Ring	
11	201/00010/00	Washer	
12	205/00101/00	Screw	
13	217/00002/00	O-Ring	Used with B12327101 Cylinder and Shaft Assembly
14	219/00001/00	Seal Cover	Used with B12327101 Cylinder and Shaft Assembly
15	219/00003/00	Shaft Seal	Used with B12327101 Cylinder and Shaft Assembly
16	B12333701	Seal Plate Assembly	Used with B12380901 Basket (3 mm) and B12381001 Basket (9 mm)
17	205/00102/00	Bolt	
18	201/00201/00	Washer	
19	206/00045/00	Bolt	
20	113/00016/01	U-Piece	
21	201/00012/00	Washer	
22	204/00001/00	Nut	Standard
	204/00112/00	Nut	Lock

© Copyright, Alliance Laundry Systems LLC – DO NOT COPY or TRANSMIT

Shell and Basket

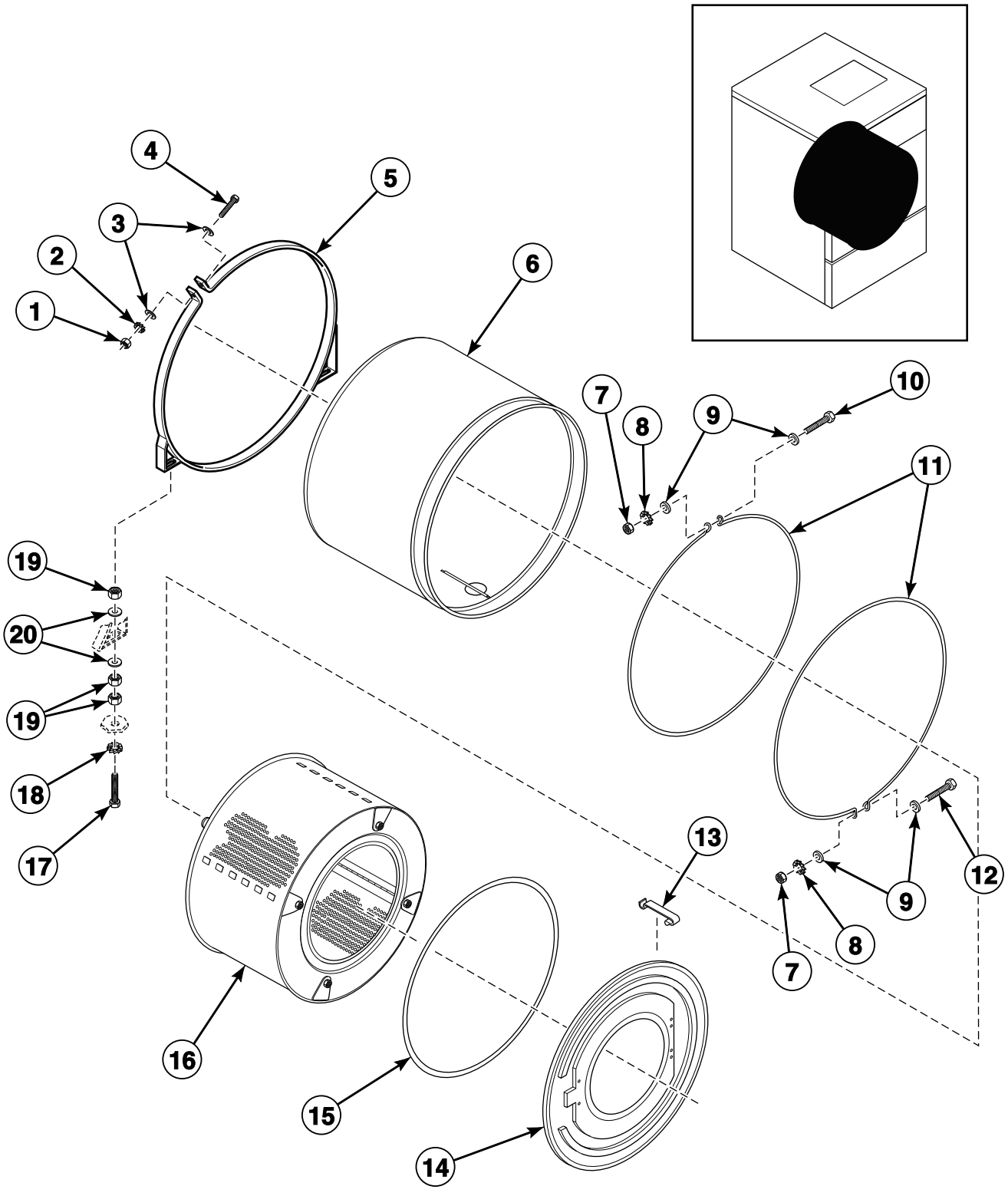

© Copyright, Alliance Laundry Systems LLC – DO NOT COPY or TRANSMIT

Shell and Basket

REF	PART NO.	DESCRIPTION	COMMENTS
1	204/00003/00	Nut	
2	203/00002/00	Washer	
3	201/00005/00	Washer	
4	206/00052/00	Bolt	
5	137/00004/00	Tub Ring Assembly	
6	119/00228/00	Outer Tub	Electric heat
	138/00006/00	Outer Tub	Steam heat; 2 inlet
	138/00003/00	Outer Tub	Steam heat; 3 inlet
	138/00008/00	Outer Tub	Electric heat; 4 inlet
	138/00009/00	Outer Tub	Steam heat; 4 inlet
	138/00010/00	Outer Tub	6 inlet
7	204/00005/00	Nut	
8	203/00004/00	Washer	
9	202/00003/00	Washer	
10	206/00011/00	Bolt	
11	238/00011/00	Tub Clamp Ring	
12	206/00034/00	Bolt	
13	217/00008/00	Tub Front Panel Clip	
14	138/00001/00	Tub Front	
15	223/00242/40	Tub Front Panel Gasket	
16	B12543201	Basket Kit	Used with 217/00002/00 O-Ring, 119/0001/00 Seal Plate and 219/00003/00 Shaft Seal
	B12380901	Basket	3 mm; Used with B12333701 Seal Plate Assembly
	B12381001	Basket	9 mm; Used with B12333701 Seal Plate Assembly
17	206/00029/00	Bolt	
18	203/00001/00	Washer	
19	204/00002/00	Nut	
20	201/00009/00	Washer	

© Copyright, Alliance Laundry Systems LLC – DO NOT COPY or TRANSMIT

Basket, Pulley and Belt

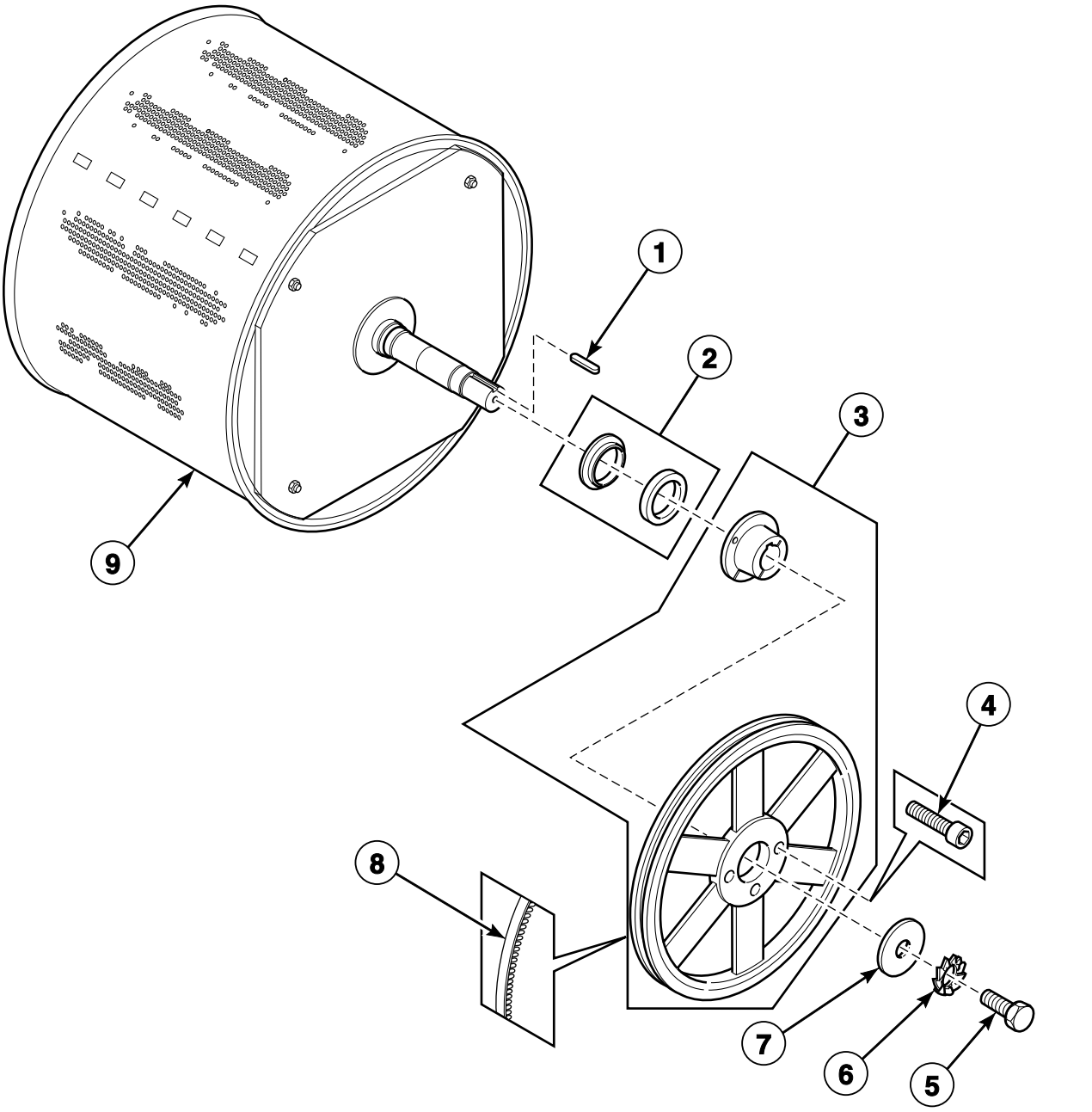

BE000387P_D0244

© Copyright, Alliance Laundry Systems LLC – DO NOT COPY or TRANSMIT

Basket, Pulley and Belt

REF	PART NO.	DESCRIPTION	COMMENTS
1	212/00026/00	Key	
2	219/00004/00	Counter Ring	
3	239/00013/00	Pulley	
4	206/00130/00	Bolt	M12 x 45
	206/00053/00	Screw	M12 x 50
5	206/00004/00	Bolt	
6	203/00001/00	Washer	
7	201/00011/00	Washer	
8	226/00028/00	Belt	
9	B12543201	Basket Kit	Used with 217/00002/00 O-Ring, 119/0001/00 Seal Plate and 219/00003/00 Shaft Seal
	B12380901	Basket	3 mm; Used with B12333701 Seal Plate Assembly
	B12381001	Basket	9 mm; Used with B12333701 Seal Plate Assembly

© Copyright, Alliance Laundry Systems LLC – DO NOT COPY or TRANSMIT

Motor with Built-In Tightening Bracket - Models without Inverter Drive

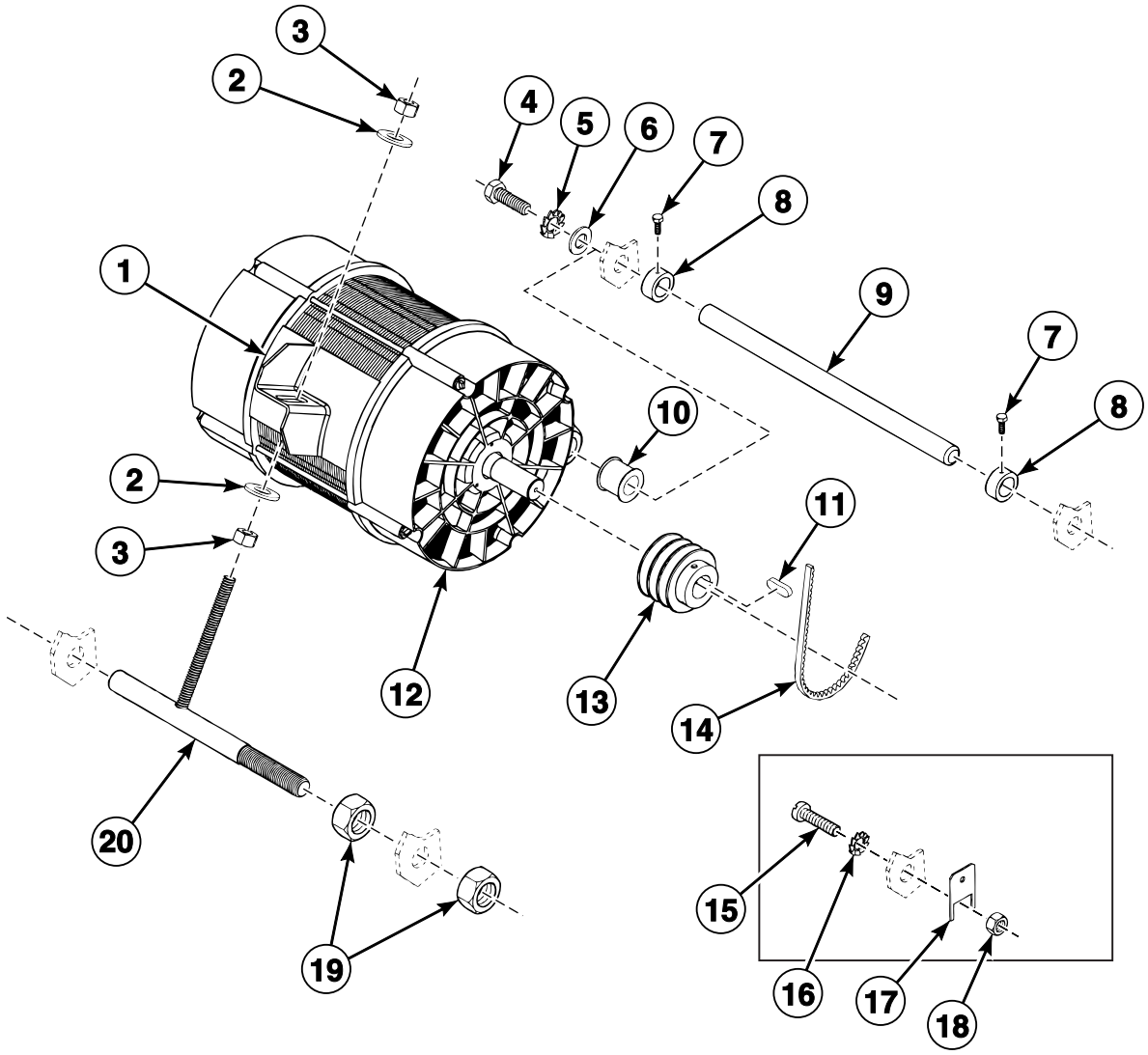

BE000381AP_D0244

© Copyright, Alliance Laundry Systems LLC – DO NOT COPY or TRANSMIT

Motor with Built-In Tightening Bracket - Models without Inverter Drive

REF	PART NO.	DESCRIPTION	COMMENTS
1	141/00005/00	Belt	
2	201/00004/00	Washer	
3	204/00002/00	Nut	
4	206/00006/00	Bolt	
5	203/00002/00	Washer	
6	201/00010/00	Washer	
7	206/00014/00	Bolt	
8	226/00054/00	Safety Ring	
9	126/00051/00	Spindle	
10	223/00087/00	Stopper	
11	227/00127/01	Motor Key	
12	241/00006/00	Motor	200 Volt/60 Hertz/3 Phase
	241/00003/00	Motor	208-240 Volt/60 Hertz/3 Phase
	241/00001/00	Motor	220-380 Volt/50 Hertz/3 Phase
	241/00004/00	Motor	220-380 Volt/60 Hertz
	241/00002/00	Motor	400-440 Volt/50 Hertz
13	226/00072/00	Pulley	50 Hertz
	226/00073/00	Pulley	60 Hertz
14	226/00028/00	Belt	
15	207/00008/00	Screw	
16	203/00006/00	Washer	
17	209/00043/00	Terminal	
18	204/00007/00	Nut	
19	204/00014/00	Nut	
20	137/00002/00	Belt Tightening Piece	

© Copyright, Alliance Laundry Systems LLC – DO NOT COPY or TRANSMIT

Motor - Models without Inverter Drive

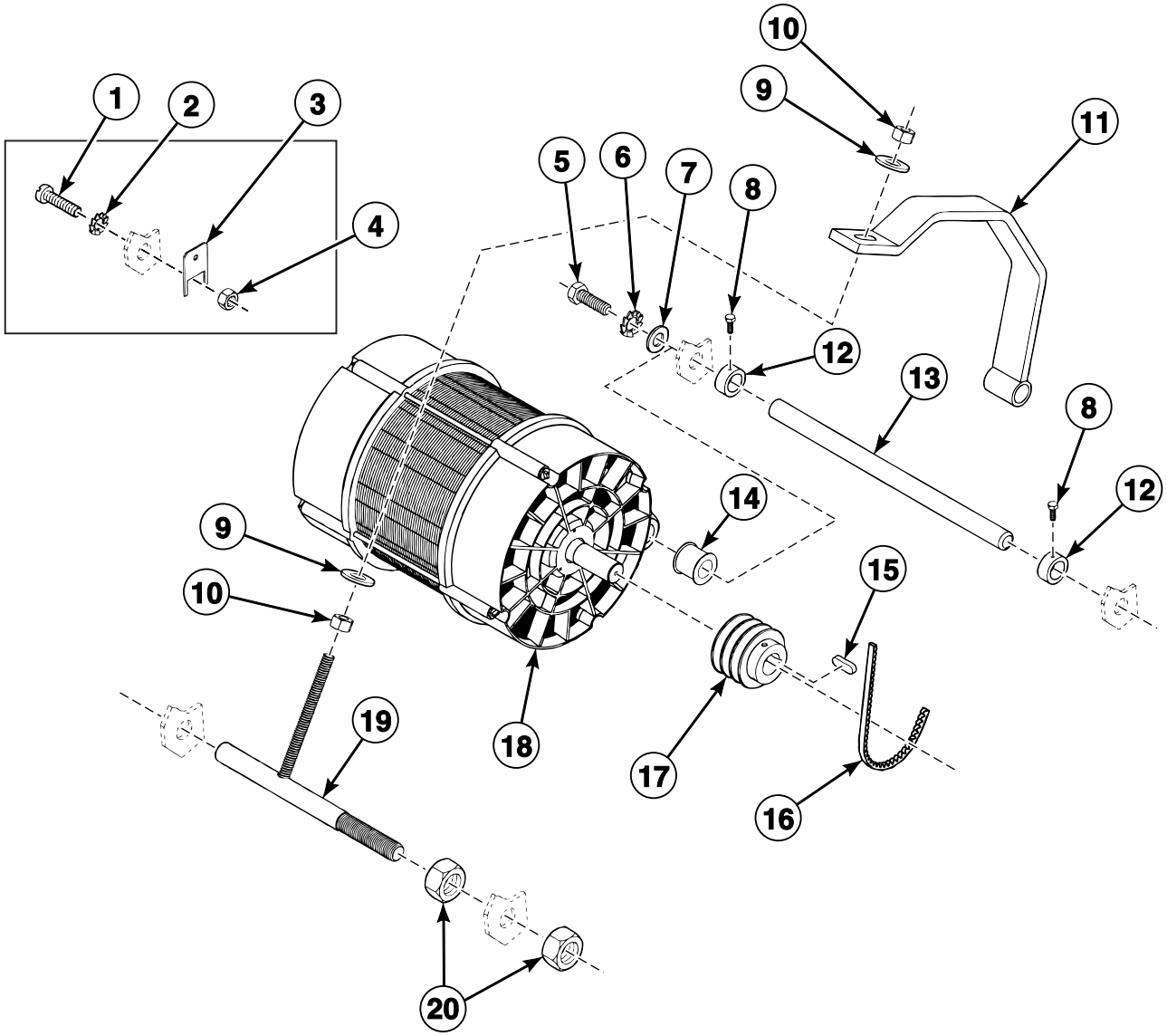

BE000396P_D0244

© Copyright, Alliance Laundry Systems LLC – DO NOT COPY or TRANSMIT

Motor - Models without Inverter Drive

REF	PART NO.	DESCRIPTION	COMMENTS
1	207/00008/00	Screw	
2	203/00006/00	Washer	
3	209/00043/00	Terminal	
4	204/00007/00	Nut	
5	206/00006/00	Bolt	
6	203/00002/00	Washer	
7	201/00010/00	Washer	
8	206/00014/00	Bolt	
9	201/00004/00	Washer	
10	204/00002/00	Nut	
11	137/00009/00	Tightening Bracket	
12	226/00054/00	Safety Ring	
13	126/00051/00	Spindle	
14	223/00087/00	Stopper	
15	227/00127/01	Motor Key	
16	226/00028/00	Belt	
17	226/00072/00	Pulley	50 Hertz
	226/00073/00	Pulley	60 Hertz
18	241/00001/00	Motor	
19	137/00002/02	Belt Tightening Piece	
20	204/00014/00	Nut	

© Copyright, Alliance Laundry Systems LLC – DO NOT COPY or TRANSMIT

Motor - Models with Inverter Drive (Drawing 1 of 2)

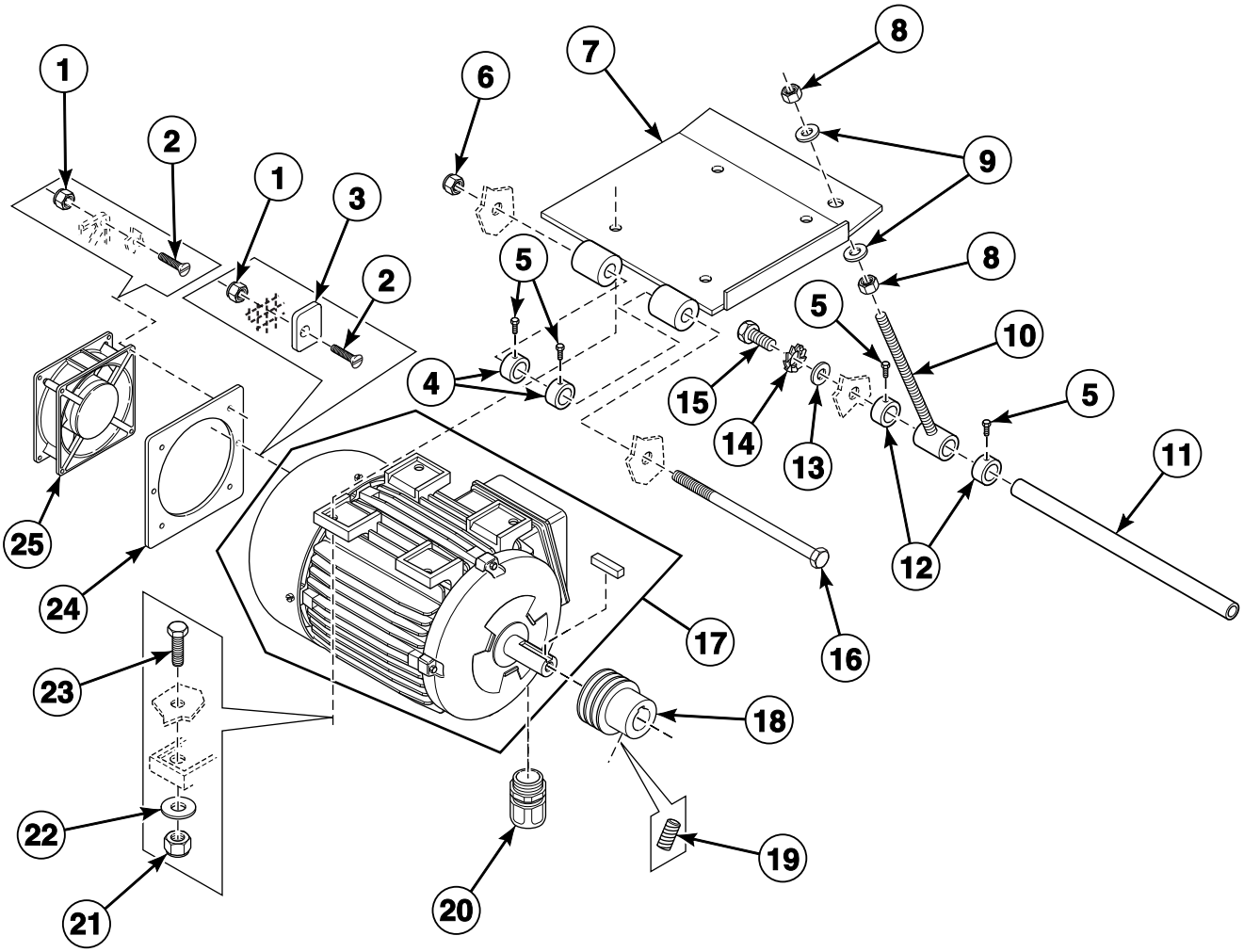

BE000369AP_D0244

© Copyright, Alliance Laundry Systems LLC – DO NOT COPY or TRANSMIT

Motor - Models with Inverter Drive (Drawing 1 of 2)

REF	PART NO.	DESCRIPTION	COMMENTS
1	204/00115/00	Nut	
2	207/00002/00	Screw	
3	117/00042/00	Retaining Ring	
4	211/00162/00	Spacer	
5	206/00014/00	Bolt	
6	204/00113/00	Nut	
7	137/00010/00	Mounting Plate	
8	204/00012/00	Nut	
9	201/00001/00	Washer	
10	197/00011/00	Rod	
11	126/00051/00	Spindle	
12	226/00054/00	Safety Ring	
13	201/00010/00	Washer	
14	203/00002/00	Washer	
15	206/00006/00	Bolt	
16	206/00127/00	Bolt	
17	B12510701	Motor	
18	226/00092/00	Pulley	
19	206/00056/00	Screw	
20	211/00117/00	Cordlock	
21	204/00111/00	Nut	
22	201/00004/00	Washer	
23	206/00003/00	Bolt	
24	111/00243/00	Intermediate Fan Motor Plate	
25	209/00287/00	Cooling Fan	

© Copyright, Alliance Laundry Systems LLC – DO NOT COPY or TRANSMIT

Motor - Models with Inverter Drive (Drawing 2 of 2)

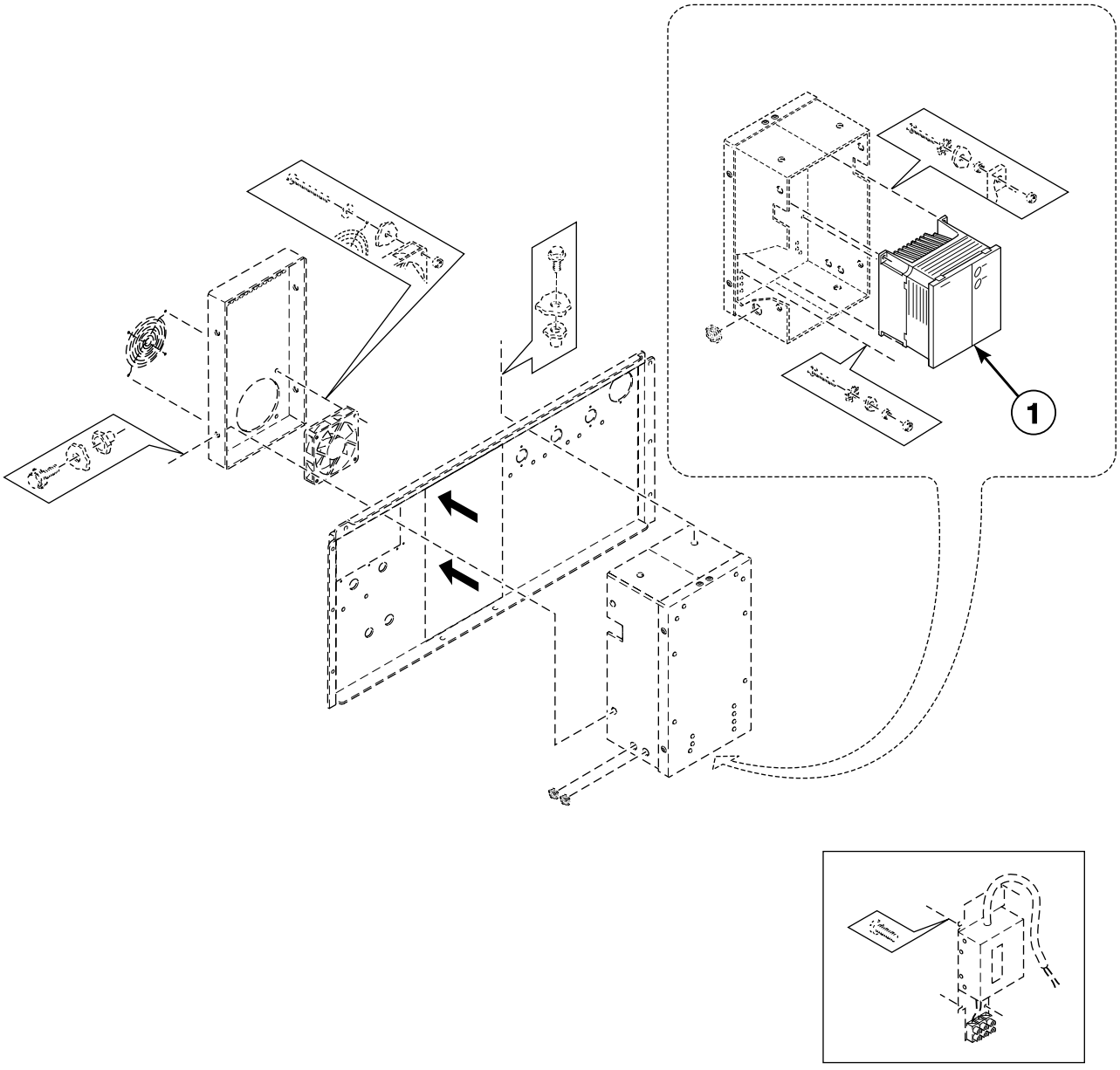

BE000371PA_D0244

© Copyright, Alliance Laundry Systems LLC – DO NOT COPY or TRANSMIT

Motor - Models with Inverter Drive (Drawing 2 of 2)

REF	PART NO.	DESCRIPTION	COMMENTS
1	F8421211	Inverter Drive Kit	200 Volt/1 Phase; Used to convert from 500 to 700 series inverter drive
	F8421212	Inverter Drive Kit	400 Volt/3 Phase; Used to convert from 500 to 700 series inverter drive
	F8421311	Inverter Drive	200 Volt/1 Phase; 700 series
	F8421312	Inverter Drive	400 Volt/3 Phase; 700 series

© Copyright, Alliance Laundry Systems LLC – DO NOT COPY or TRANSMIT

Drain Plumbing

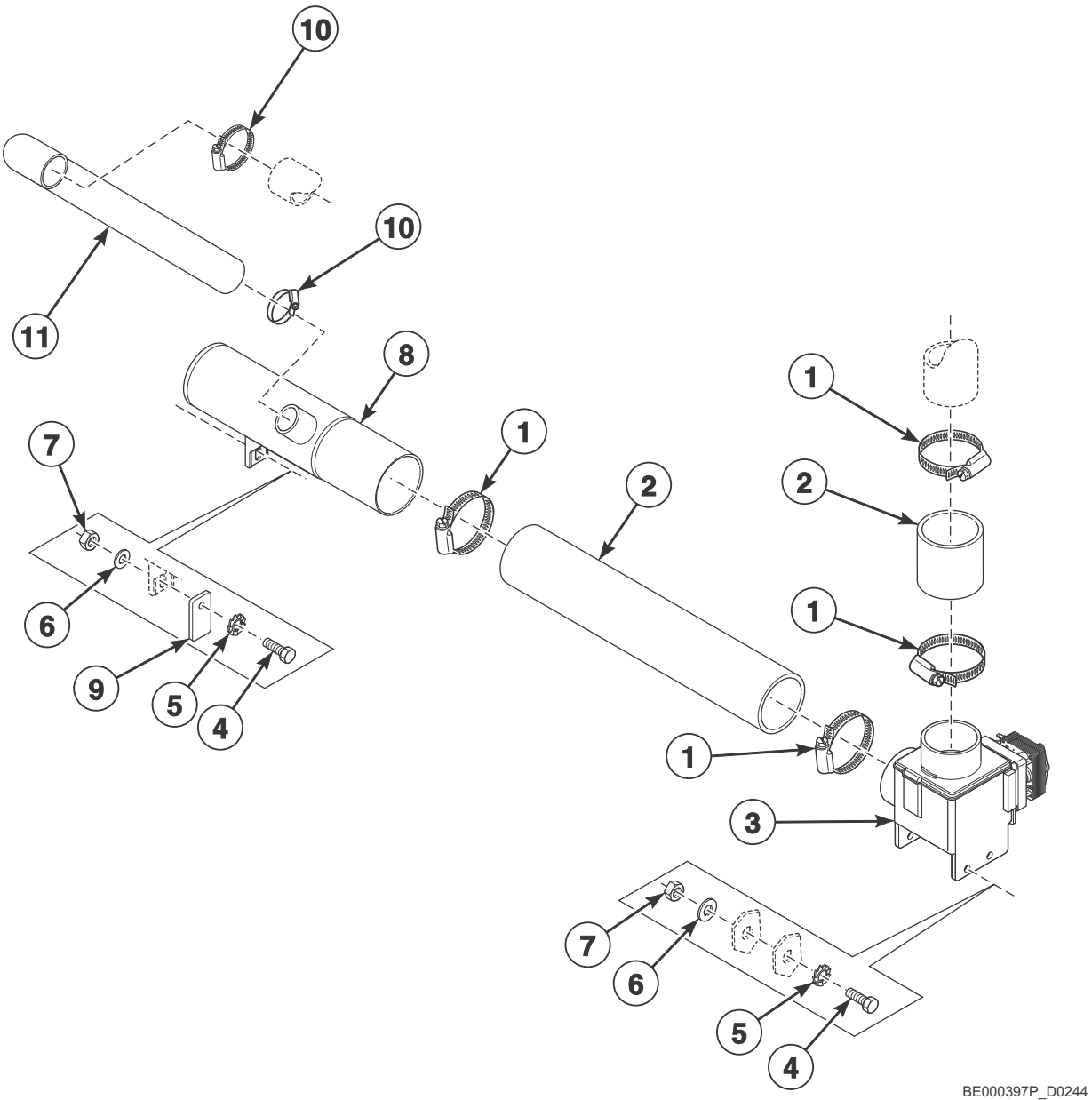

© Copyright, Alliance Laundry Systems LLC – DO NOT COPY or TRANSMIT

Drain Plumbing

REF	PART NO.	DESCRIPTION	COMMENTS
1	223/00023/00	Hose Clamp	
2	223/00183/00	Drain Hose	
3	209/00399/00	Drain Valve	
4	206/00013/00	Bolt	
5	203/00004/00	Washer	
6	201/00006/00	Washer	
7	204/00005/00	Nut	
8	223/00106/00	Drain Pipe	
9	101/00007/00	Outlet Pipe Plate Assembly	
10	223/00013/00	Hose Clamp	
11	223/00100/00	Overflow Hose	

© Copyright, Alliance Laundry Systems LLC – DO NOT COPY or TRANSMIT

Drain Valve

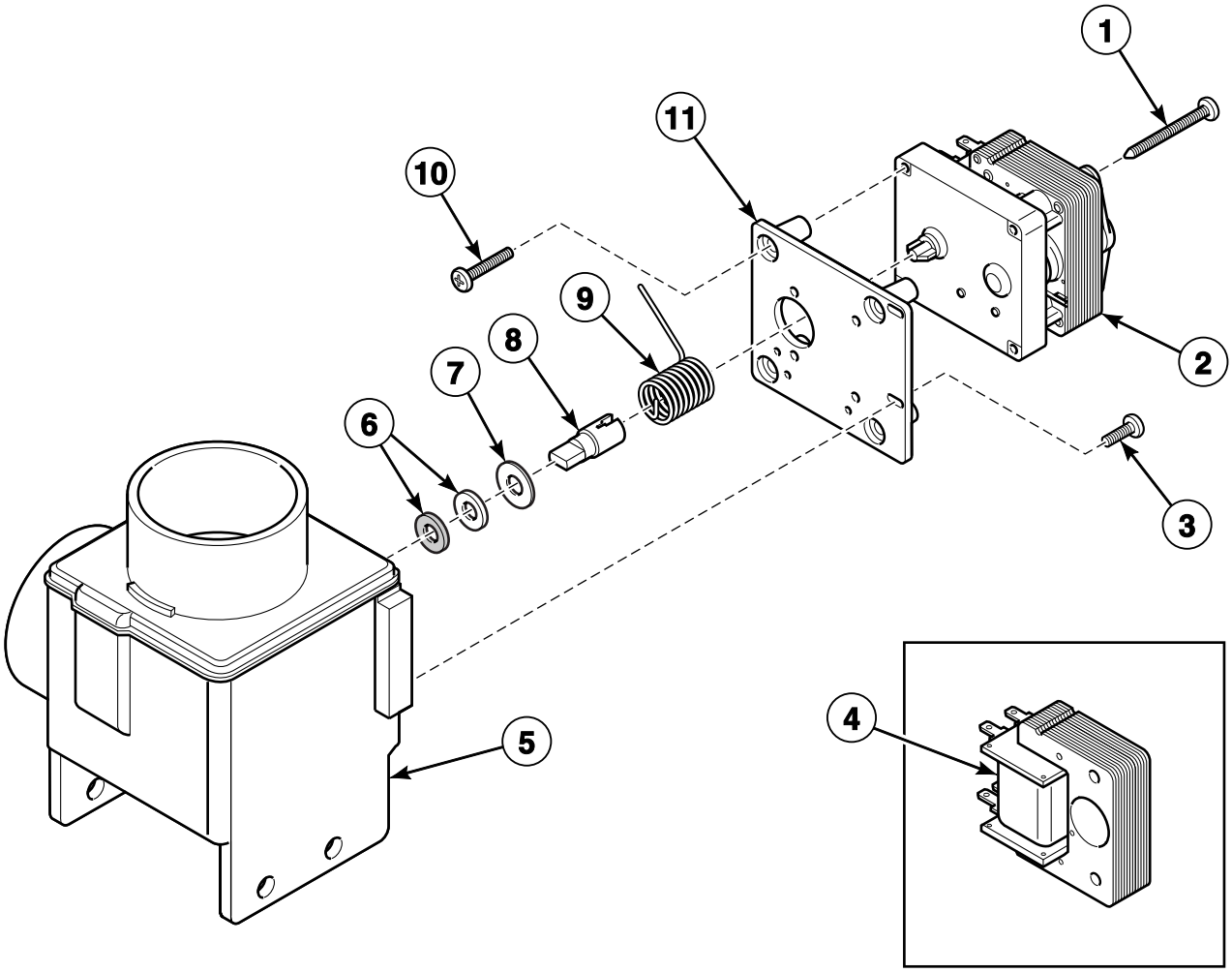

BE000392P_D0244

© Copyright, Alliance Laundry Systems LLC – DO NOT COPY or TRANSMIT

Drain Valve

REF	PART NO.	DESCRIPTION	COMMENTS
1	209/00025/08	Screw	
2	209/00203/11	Drain Valve Motor	24 Volt
	209/00052/11	Drain Valve Motor	110 Volt/60 Hertz
	209/00051/11	Drain Valve Motor	220 Volt/50 or 60 Hertz
3	209/00170/05	Screw	
4	209/00203/21	Coil	24 Volt
	209/00052/21	Coil	115 Volt/60 Hertz
	209/00051/21	Coil	220 Volt/50 or 60 Hertz
5	209/00399/01	Housing	
6	209/00025/10	Drain Valve Shaft Seal	
7	209/00025/12	Washer	
8	209/00170/10	Drain Valve Shaft	
9	209/00025/13	Drain Valve Spring	
10	209/00025/08	Screw	
11	209/00025/07	Drain Valve Motor Mounting Plate	

© Copyright, Alliance Laundry Systems LLC – DO NOT COPY or TRANSMIT

Door Lock - Models Through 1997

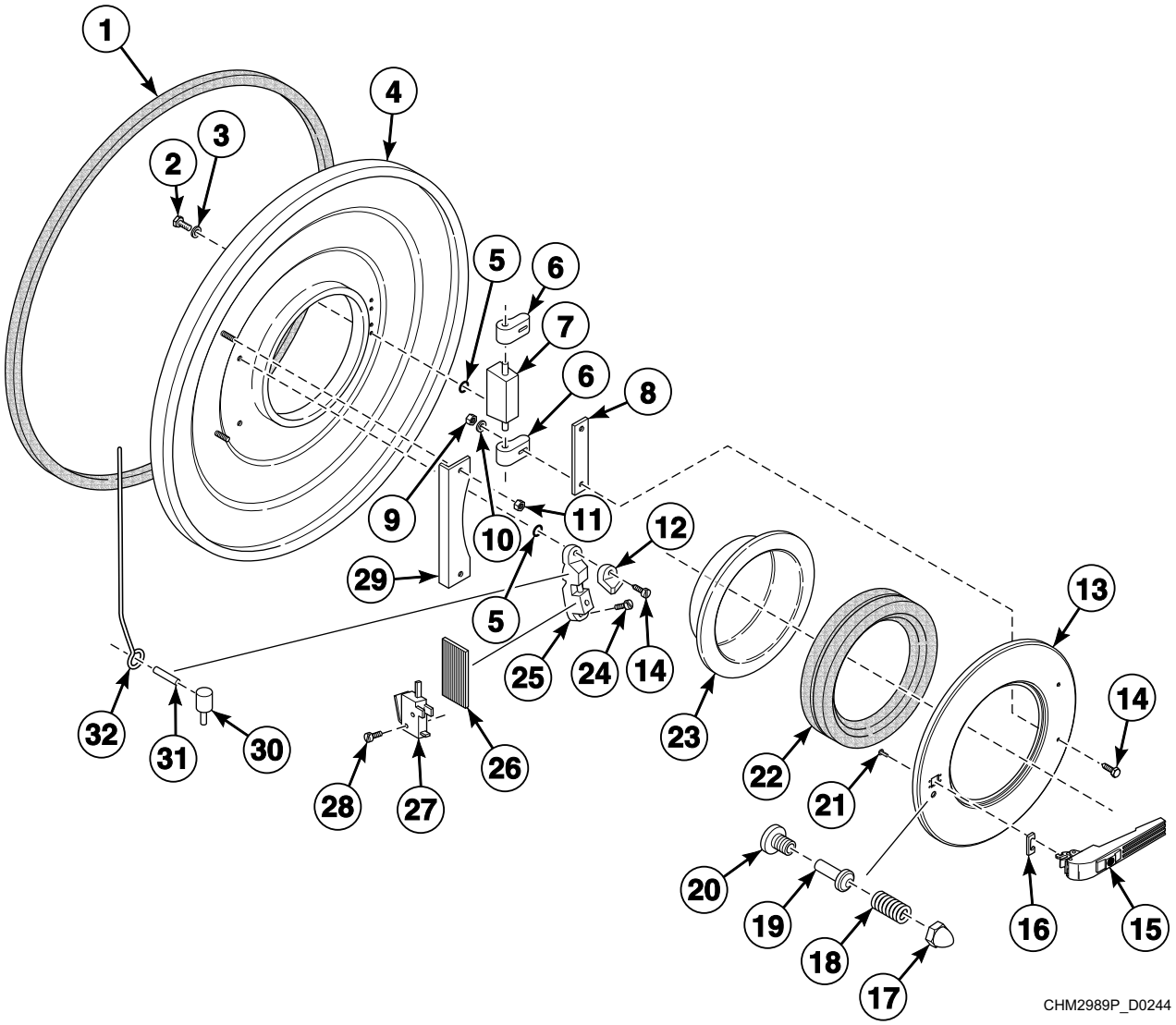

© Copyright, Alliance Laundry Systems LLC – DO NOT COPY or TRANSMIT

Door Lock - Models Through 1997

REF	PART NO.	DESCRIPTION	COMMENTS
1	223/00242/00	Tub Front Gasket	
2	205/00104/00	Bolt	
3	202/00101/00	Washer	
4	138/00001/00	Tub Front	
5	217/00021/00	O-Ring	
6	217/00009/02	Door Hinge Assembly	
7	217/00009/01	Door Hinge	
8	117/00010/00	Door Hinge Spacer	
9	204/00106/00	Nut	
10	202/00003/00	Washer	
11	204/00009/00	Nut	
12	217/00017/02	Protection Block	
13	118/00125/00	Door	
14	207/00102/00	Screw	
15	217/00055/00	Door Handle	
16	217/00016/00	Door Handle Stop	
17	204/00103/00	Nut	
18	217/00020/00	Spring	
19	211/00105/00	Pin	
20	217/00019/00	Holder	
21	B12500801	Screw	
22	223/00068/00	Door Glass Seal	
23	B12449801	Door Glass	
24	207/00112/00	Screw	
25	217/00017/00	Door Lock Assembly	
26	217/00038/00	Insulation Plate	
27	209/00023/00	Door Switch	
28	207/00109/00	Screw	
29	N/A	Door Interlock System Protection Plate	
30	224/00003/00	Interlock Pin	
31	208/00004/00	Pin	
32	N/A	Lock Wire Bridge	

N/A = Part no longer available

© Copyright, Alliance Laundry Systems LLC – DO NOT COPY or TRANSMIT

Door Lock - Models Starting 1998

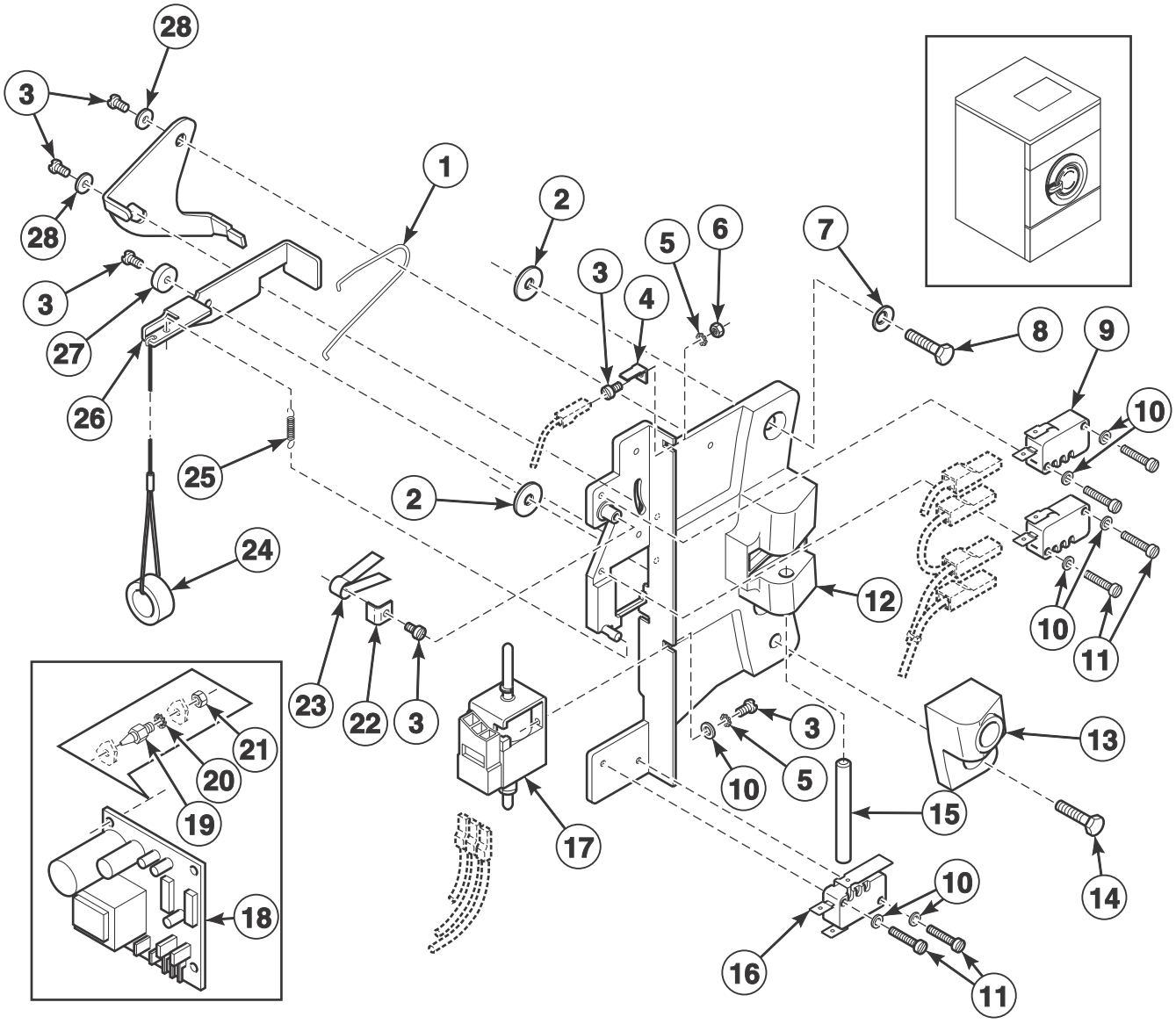

BE000059AP_D0244

© Copyright, Alliance Laundry Systems LLC – DO NOT COPY or TRANSMIT

Door Lock - Models Starting 1998

REF	PART NO.	DESCRIPTION	COMMENTS
1	224/00040/00	Lever Spring	
2	217/00021/00	O-Ring	
3	207/00135/00	Screw	
4	210/10015/00	Ground Terminal	
5	203/00007/00	Washer	
6	204/00008/00	Nut	
7	203/00010/00	Washer	
8	207/00112/00	Screw	
9	209/00272/00	Door Lock Microswitch	
10	201/00018/00	Washer	
11	207/00009/00	Screw	
12	B12517701	Door Lock Assembly	Includes items 1-11, 13-17 and 22-28
13	217/00052/02	Door Lock Pin Kit	
14	207/00102/00	Screw	
15	217/00017/03	Lock Shaft	
16	B12625101	Microswitch	
17	209/00274/00	Door Lock Solenoid	
18	209/00275/04	Door Lock Board	
19	211/00120/00	Standoff	
20	203/00006/00	Washer	
21	204/00007/00	Nut	
22	217/00052/08	Washer	
23	224/00049/00	Door Lock Spring	
24	217/00052/07	Door Release Wire	
25	224/00043/00	Interlock Coil Spring	
26	217/00052/04	Interlock Lever	
27	217/00052/03	Door Lock Spacer	
28	201/00017/00	Washer	

© Copyright, Alliance Laundry Systems LLC – DO NOT COPY or TRANSMIT

Door

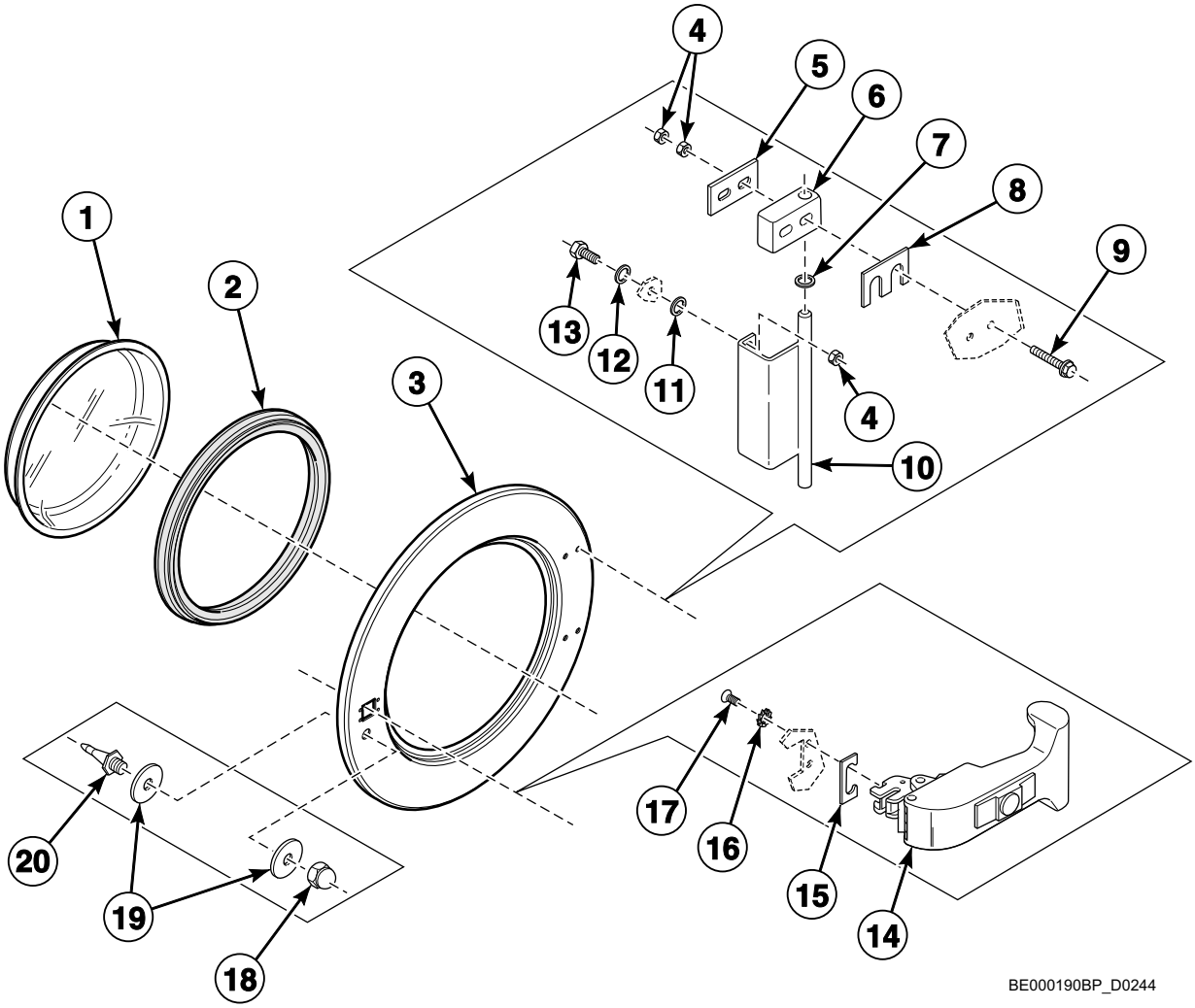

© Copyright, Alliance Laundry Systems LLC – DO NOT COPY or TRANSMIT

Door

REF	PART NO.	DESCRIPTION	COMMENTS
1	B12449801	Door Glass	
2	223/00068/00	Door Glass Seal	
3	118/00125/00	Door	
4	204/00106/00	Nut	
5	118/00121/00	Door Hinge Plate Assembly	
6	253/00022/00	Door Hinge Block	
7	202/00104/00	Washer	
8	118/00124/00	Door Hinge Spacer	2 mm
9	207/00126/00	Screw	
10	131/00046/00	Hinge	
11	217/00021/00	O-Ring	
12	202/00101/00	Washer	
13	205/00104/00	Bolt	
14	217/00051/00	Door Handle	
15	217/00016/00	Door Handle Stop	
16	203/00008/00	Washer	
17	B12500801	Screw	
18	204/00103/00	Nut	
19	202/00111/00	Washer	
20	211/00109/02	Door Lock Pin Kit	

© Copyright, Alliance Laundry Systems LLC – DO NOT COPY or TRANSMIT

Door Handle (Drawing 1 of 2)

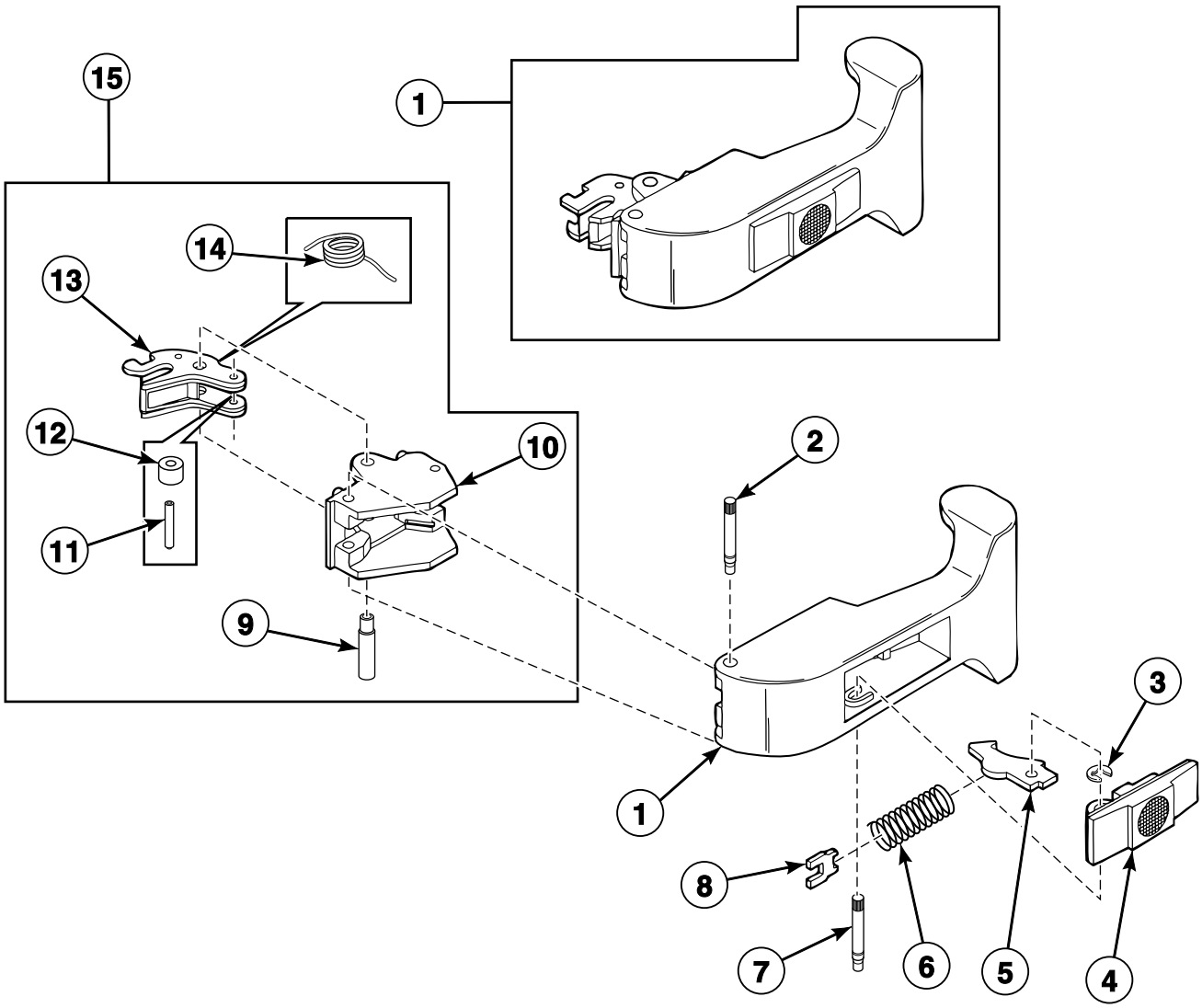

BE000034AP_D0244

© Copyright, Alliance Laundry Systems LLC – DO NOT COPY or TRANSMIT

Door Handle (Drawing 1 of 2)

REF	PART NO.	DESCRIPTION	COMMENTS
1	217/00051/00	Door Handle	
2	217/00013/09	Door Mounting Pin	
3	217/00013/11	Door Circlip	
4	217/00013/12	Door Handle	
5	217/00013/13	Door Handle Hook	
6	217/00013/14	Door Handle Spring	
7	217/00013/15	Door Handle Locking Pin	
8	217/00013/16	Door Handle Assembly Plate	
9	217/00013/08	Door Locking Pin	
10	217/00013/07	Door Locking Grip	
11	217/00013/05	Door Axle Roller	
12	217/00013/06	Door Roller	
13	217/00013/04	Door Handle Latch	
14	217/00013/03	Door Lock Spring	
15	217/00051/14	Door Handle Latch	

© Copyright, Alliance Laundry Systems LLC – DO NOT COPY or TRANSMIT

Door Handle (Drawing 2 of 2)

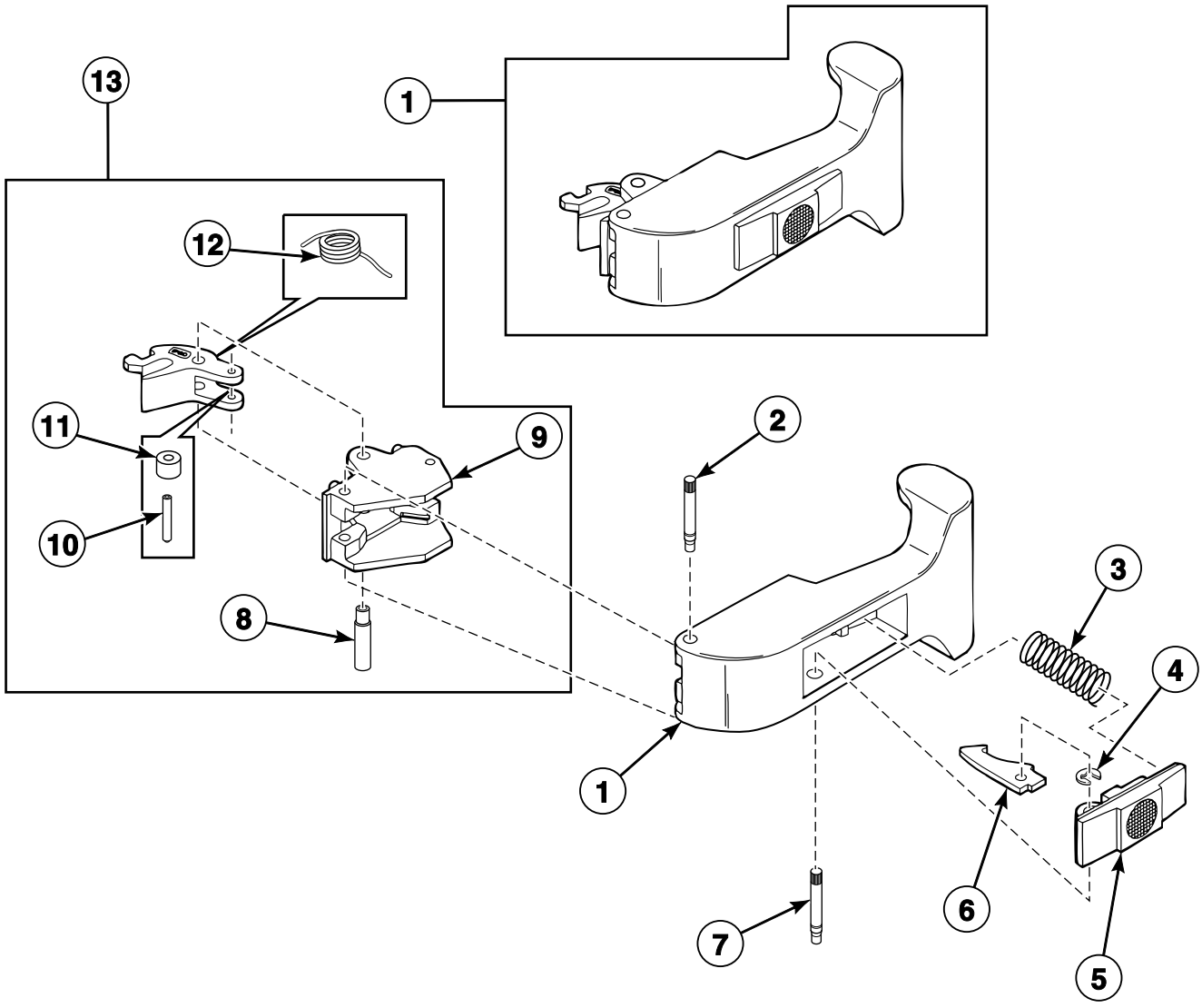

© Copyright, Alliance Laundry Systems LLC – DO NOT COPY or TRANSMIT

Door Handle (Drawing 2 of 2)

REF	PART NO.	DESCRIPTION	COMMENTS
1	217/00051/00	Door Handle	
2	217/00013/09	Door Mounting Pin	
3	217/00013/14	Door Handle Spring	
4	217/00013/11	Door Circlip	
5	217/00013/12	Door Handle	
6	217/00051/13	Door Handle Catch	
7	217/00051/15	Door Locking Pin	
8	217/00013/08	Door Locking Pin	
9	217/00013/07	Door Locking Grip	
10	217/00013/05	Door Axle Roller	
11	217/00013/06	Door Roller	
12	217/00013/03	Door Lock Spring	
13	217/00051/14	Door Handle Latch	

© Copyright, Alliance Laundry Systems LLC – DO NOT COPY or TRANSMIT

Control Panel - Micro-20

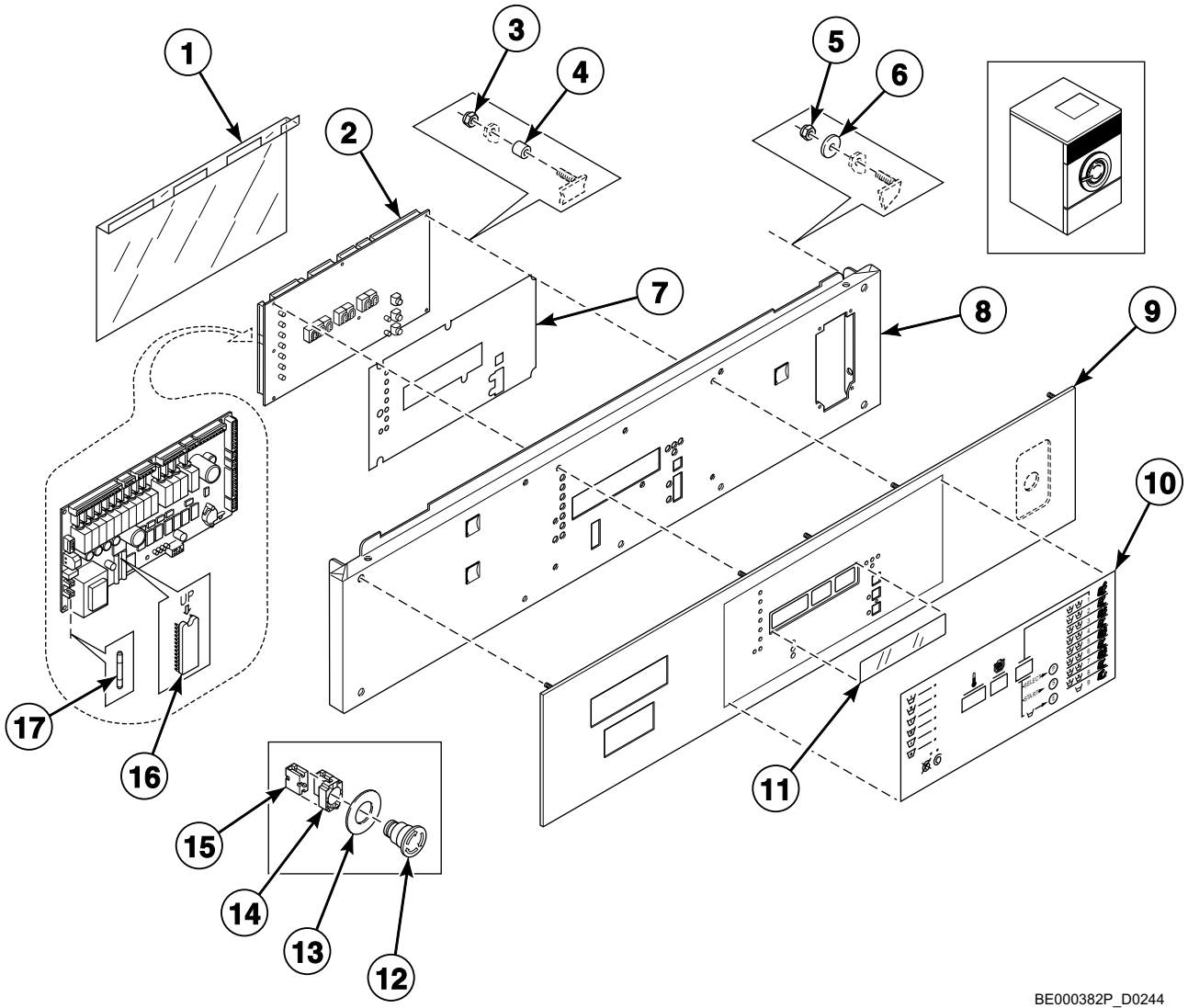

© Copyright, Alliance Laundry Systems LLC – DO NOT COPY or TRANSMIT

Control Panel - Micro-20

REF	PART NO.	DESCRIPTION	COMMENTS
1	229/00262/00	Circuit Board Cover	
2	209/00440/02	Printboard	115 Volt
	209/00440/00	Printboard	230 Volt; Models through 8/31/01
	209/00440/70	Printboard	230 Volt; Models starting 9/1/01
3	204/00116/00	Nut	
4	211/00122/00	Standoff	
5	204/00009/00	Nut	
6	201/00008/00	Washer	
7	229/00255/00	Insulating Sticker	
8	111/00221/00	Upper Front Panel	Stainless steel
	111/00184/10	Upper Front Panel	Epoxy
9	225/00298/AOL	Facia Panel	OPL
	225/00306/AOL	Facia Panel	Coin
10	225/00309/00	Sticker	OPL
	225/00308/00	Sticker	Coin
11	225/00316/00	Plexi Frame	
12	209/00248/00	Mushroom Pushbutton	
13	209/00520/00	Telem Sticker	
14	209/00253/00	Emergency Stop Button Kit	
15	209/00099/06	Contact Switch	
16	209/00266/01	Eprom	
17	209/00439/00	Fuse	

© Copyright, Alliance Laundry Systems LLC – DO NOT COPY or TRANSMIT

Control Panel - Sigma

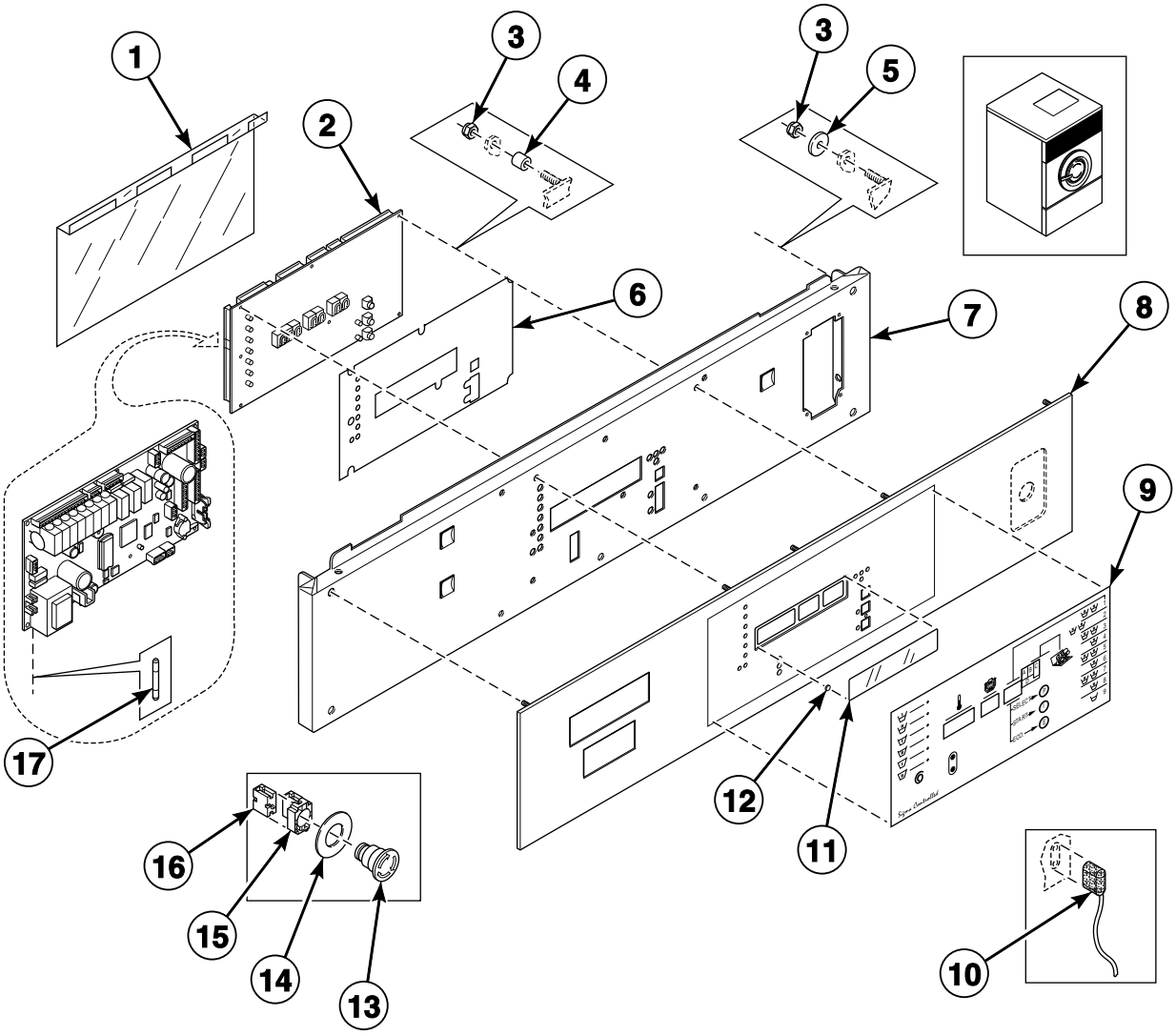

© Copyright, Alliance Laundry Systems LLC – DO NOT COPY or TRANSMIT

Control Panel - Sigma

REF	PART NO.	DESCRIPTION	COMMENTS
1	229/00262/00	Circuit Board Cover	
2	209/00547/00	Control Board	
3	204/00114/00	Nut	
4	211/00122/00	Standoff	
5	201/00008/00	Washer	
6	229/00255/00	Insulating Sticker	
7	111/00221/00	Upper Front Panel	Stainless steel
	111/00184/10	Upper Front Panel	Epoxy
8	225/00298/AOL	Facia Panel	OPL
	225/00306/AOL	Facia Panel	Coin
9	225/00361/00	Front Label	OPL
	225/00403/00	Decal	Coin
	225/00367/00	Front Label	Coin models with central payment
10	210/00902/00	Infrared Cable	
11	225/00316/00	Plexi Frame	
12	202/00120/00	Metal Disc	
13	209/00248/00	Mushroom Pushbutton	
14	209/00520/00	Telem Sticker	
15	209/00253/00	Emergency Stop Button Kit	
16	209/00099/06	Contact Switch	
17	209/00439/00	Fuse	

© Copyright, Alliance Laundry Systems LLC – DO NOT COPY or TRANSMIT

Control Panel - PS40F

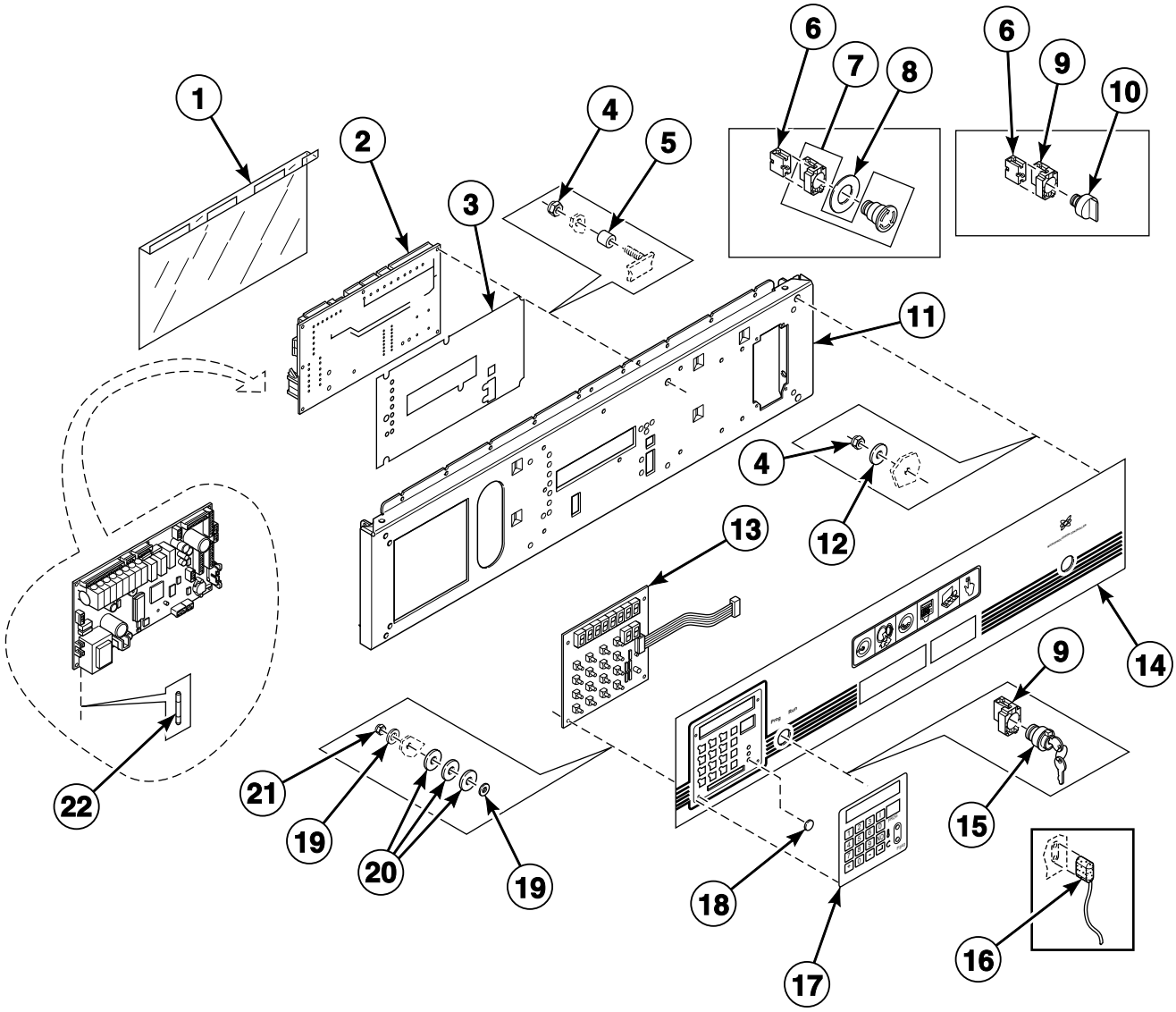

BE000554P_D0244

© Copyright, Alliance Laundry Systems LLC – DO NOT COPY or TRANSMIT

Control Panel - PS40F

REF	PART NO.	DESCRIPTION	COMMENTS
1	229/00262/00	Circuit Board Cover	
2	B12351701	Main Board	
3	229/00255/00	Insulating Sticker	
4	204/00116/00	Nut	
5	211/00122/00	Standoff	
6	209/00099/26	Contact Switch	
7	209/00248/20	Mushroom Pushbutton	
8	209/00520/00	Telem Sticker	
9	209/00099/25	Switch Base	
10	209/00099/29	Switch Knob	
11	111/00221/50	Upper Front Panel	
12	201/00008/00	Washer	
13	209/00552/01	Keypad	
14	225/00274/00	Front Panel	
15	209/00326/20	Programming Key Contact Switch	
16	210/00902/00	Infrared Cable	
17	225/00365/00	Overlay	
18	202/00120/00	Metal Disc	
19	223/00123/00	Washer	
20	223/00051/10	Washer	
21	204/00116/00	Nut	
22	209/00372/01	Fuse	

© Copyright, Alliance Laundry Systems LLC – DO NOT COPY or TRANSMIT

Control Panel - PS40

Model WE234_PS40

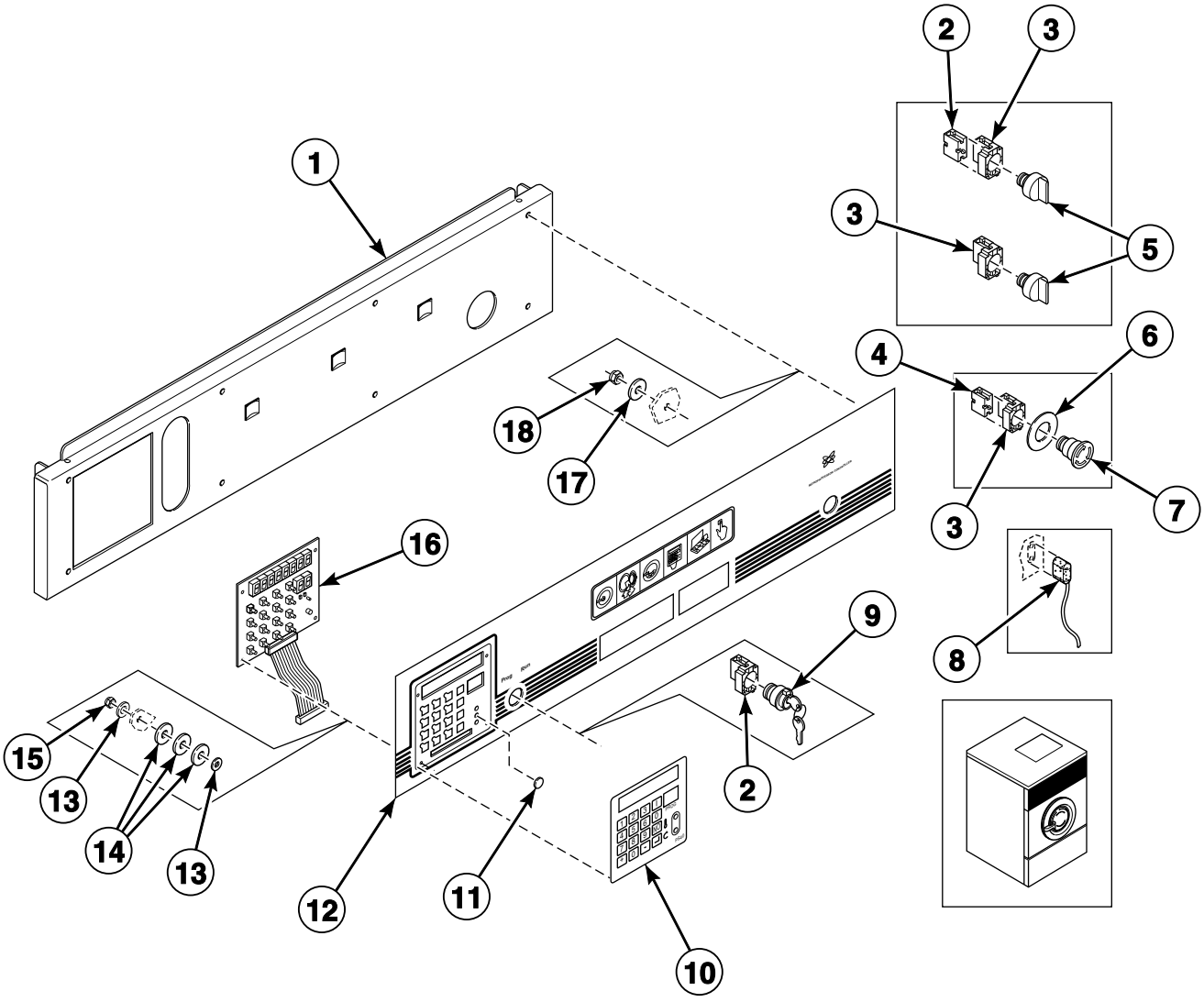

BE000368P_D0244

© Copyright, Alliance Laundry Systems LLC – DO NOT COPY or TRANSMIT

Control Panel - PS40

REF	PART NO.	DESCRIPTION	COMMENTS
1	111/00218/00	Front Panel	
2	209/00099/05	Contact	
3	209/00253/00	Emergency Stop Button Kit	
4	209/00099/26	Contact Switch	
5	209/00099/09	Button	
6	209/00520/00	Telem Sticker	
7	209/00248/00	Mushroom Pushbutton	
8	210/00902/00	Infrared Cable	
9	209/00326/00	Programming Switch	
10	225/00365/00	Overlay	
11	202/00120/00	Metal Disc	
12	225/00272/00	Upper Front Panel	
13	223/00123/00	Washer	
14	223/00051/10	Washer	
15	204/00116/00	Nut	
16	209/00505/01	Keypad Controller	
17	201/00008/00	Washer	
18	204/00114/00	Nut	

© Copyright, Alliance Laundry Systems LLC – DO NOT COPY or TRANSMIT

Control Panel - PC30

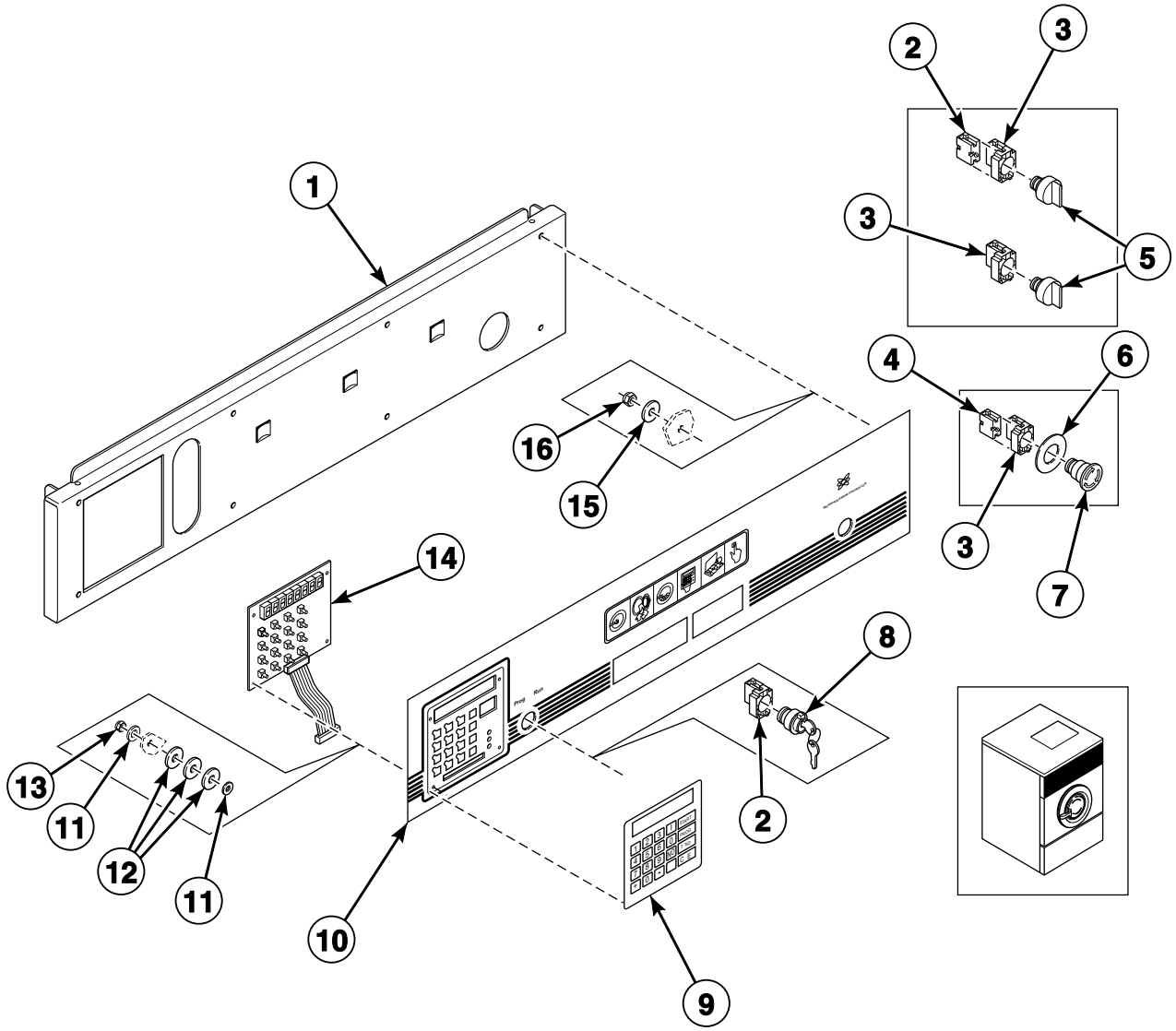

BE000388P_D0244

© Copyright, Alliance Laundry Systems LLC – DO NOT COPY or TRANSMIT

Control Panel - PC30

REF	PART NO.	DESCRIPTION	COMMENTS
1	111/00218/00	Front Panel	
2	209/00099/05	Contact	
3	209/00253/00	Emergency Stop Button Kit	
4	209/00099/26	Contact Switch	
5	209/00099/09	Button	
6	209/00520/00	Telem Sticker	
7	209/00248/00	Mushroom Pushbutton	
8	209/00326/00	Programming Switch	
9	229/00245/00	Label	
10	225/00272/00	Upper Front Panel	
11	223/00123/00	Washer	
12	223/00051/10	Washer	
13	204/00116/00	Nut	
14	209/00323/01	Keyboard	
15	201/00008/00	Washer	
16	204/00114/00	Nut	

© Copyright, Alliance Laundry Systems LLC – DO NOT COPY or TRANSMIT

Control Panel - 10-Button Mechanical Timer

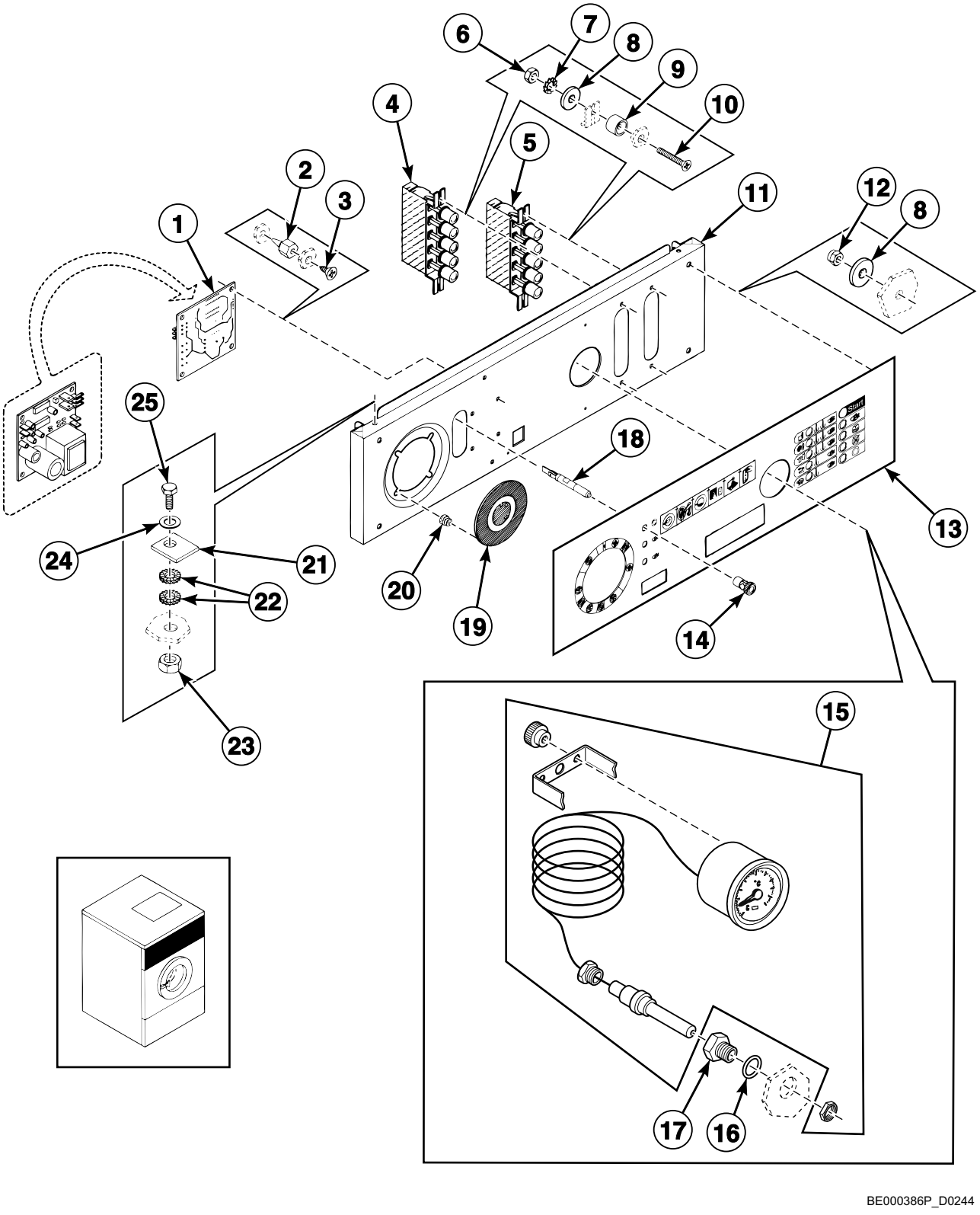

BE000386P_D0244

© Copyright, Alliance Laundry Systems LLC – DO NOT COPY or TRANSMIT

Control Panel - 10-Button Mechanical Timer

REF	PART NO.	DESCRIPTION	COMMENTS
1	209/00275/05	Door Lock Board	115 Volt
	209/00275/04	Door Lock Board	230 Volt
2	211/00125/00	Printboard Separator	
3	208/00024/00	Screw	
4	209/00176/00	Selector Switch	
5	209/00175/00	Selector Switch	
6	204/00007/00	Nut	
7	203/00006/00	Washer	
8	201/00008/00	Washer	
9	211/10156/00	Program Switch Separator	
10	207/00032/00	Screw	
11	111/00217/01	Front Panel	
12	204/00114/00	Nut	
13	225/00280/ABL	Facia Panel	
14	209/00152/00	Lens Cover	Red
	209/00154/00	Lens Cover	Orange
15	211/00115/00	Thermostat	
16	223/00065/01	Washer	
17	223/00065/00	Thermostat Seal	
18	209/00151/00	Lamp	
19	225/00078/00	Program Indicator	
20	225/10023/00	Fastener	
21	117/00042/00	Retaining Ring	
22	203/00005/00	Washer	
23	204/00006/00	Nut	
24	202/00003/00	Washer	
25	205/00106/00	Bolt	

© Copyright, Alliance Laundry Systems LLC – DO NOT COPY or TRANSMIT

Control Panel - 5-Button Mechanical Timer

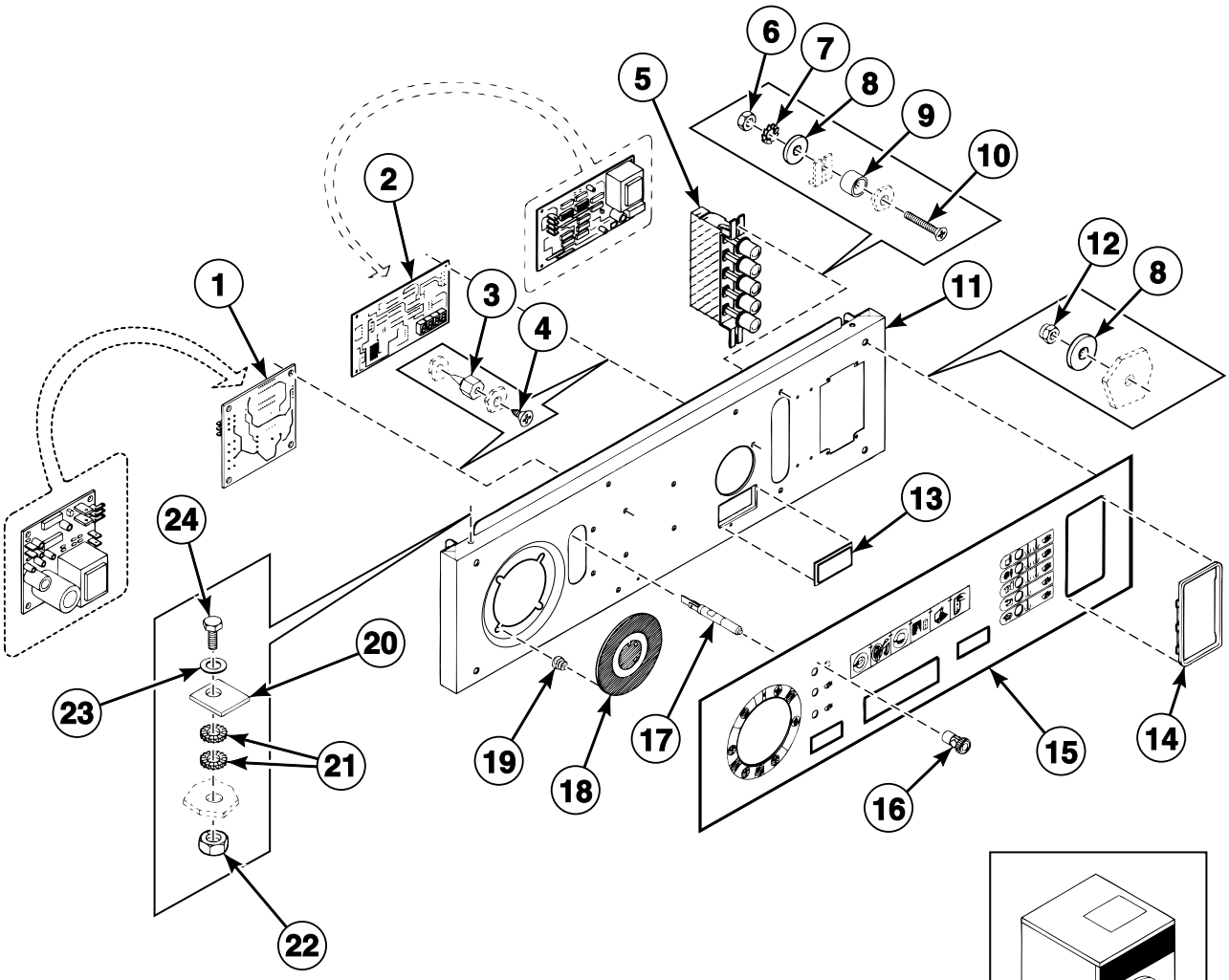

BE000385P_D0244

© Copyright, Alliance Laundry Systems LLC – DO NOT COPY or TRANSMIT

Control Panel - 5-Button Mechanical Timer

REF	PART NO.	DESCRIPTION	COMMENTS
1	209/00275/05	Door Lock Board	115 Volt
	209/00275/04	Door Lock Board	230 Volt
2	209/00281/00	Print Display	120 Volt
	209/00217/00	Coin Display	220 Volt
3	211/00125/00	Printboard Separator	
4	208/00024/00	Screw	
5	209/00175/00	Selector Switch	
6	204/00007/00	Nut	
7	203/00006/00	Washer	
8	201/00008/00	Washer	
9	211/10156/00	Program Switch Separator	
10	207/00032/00	Screw	
11	111/00217/02	Front Panel	
12	204/00114/00	Nut	
13	223/10066/00	Display	
14	225/00020/00	Coin Meter Frame	
15	225/00319/ABL	Facia Panel	
16	209/00152/00	Lens Cover	Red
	209/00154/00	Lens Cover	Orange
17	209/00151/00	Lamp	
18	225/00078/00	Program Indicator	
19	225/10023/00	Fastener	
20	117/00042/00	Retaining Ring	
21	203/00005/00	Washer	
22	204/00006/00	Nut	
23	202/00003/00	Washer	
24	205/00106/00	Bolt	

© Copyright, Alliance Laundry Systems LLC – DO NOT COPY or TRANSMIT

Electrical Component Mounting Plate - Micro 20 with Inverter Drive

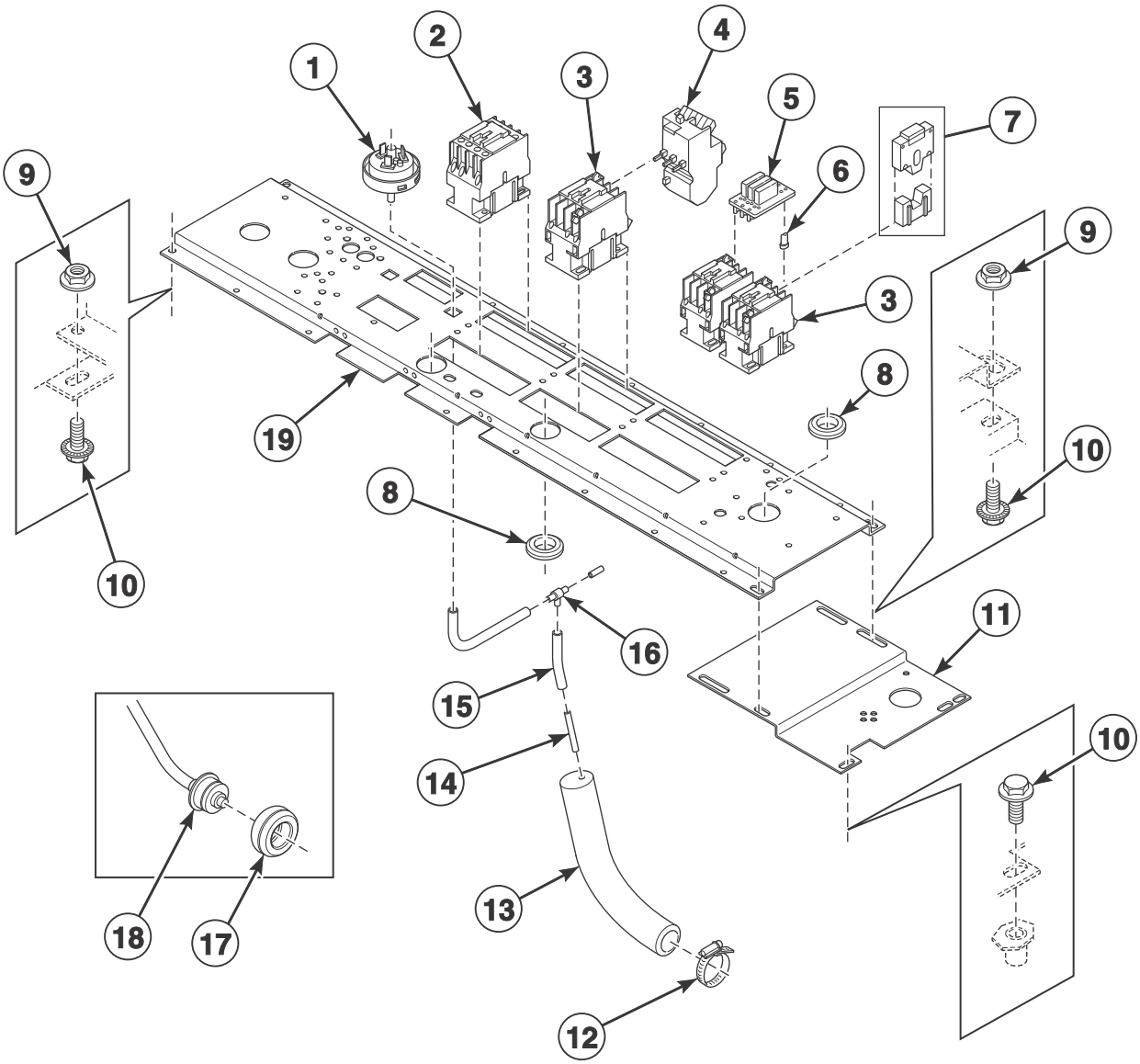

BE000370P_D0244

© Copyright, Alliance Laundry Systems LLC – DO NOT COPY or TRANSMIT

Electrical Component Mounting Plate - Micro 20 with Inverter Drive

REF	PART NO.	DESCRIPTION	COMMENTS
1	209/00007/50	Pressure Switch	
2	209/00148/02	Contactor	LC1D1810M7
	209/00041/04	Contactor	LC1D0901M7; Heating
3	209/00041/04	Contactor	
4	209/00264/00	Protector	
5	209/00265/00	Protector	
6	209/00452/02	Lug Holder	
7	209/00279/00	Lock	
8	223/00198/00	Grommet	
9	206/00101/00	Nut	
10	206/00099/00	Bolt	
11	140/00021/00	Electrical Component Extension Plate	
12	223/00011/00	Hose Clamp	
13	223/00015/00	Elbow	Level switch
14	223/00016/00	Hose Barb	
15	223/00082/00	Pressure Hose	
16	223/00179/10	Pressure Hose	
17	225/10004/00	Thermostat Grommet	
18	209/00309/02	Thermostat Assembly	
19	111/00197/00	Mounting Plate	

© Copyright, Alliance Laundry Systems LLC – DO NOT COPY or TRANSMIT

Electrical Component Mounting Plate - Micro 20 without Inverter Drive

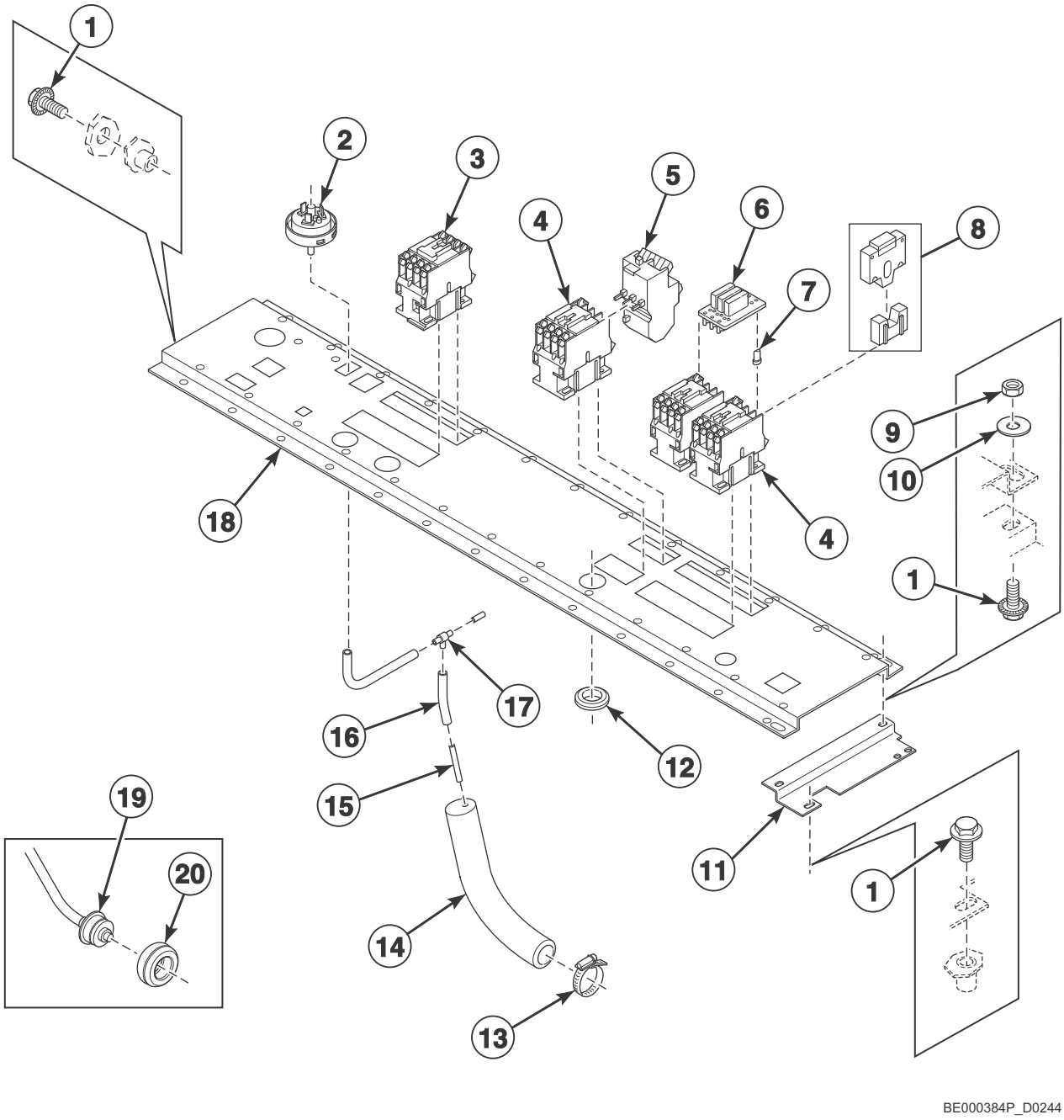

© Copyright, Alliance Laundry Systems LLC – DO NOT COPY or TRANSMIT

Electrical Component Mounting Plate - Micro 20 without Inverter Drive

REF	PART NO.	DESCRIPTION	COMMENTS
1	206/00099/00	Bolt	
2	209/00007/50	Pressure Switch	
3	209/00148/02	Contactor	LC1D1810M7
	209/00041/04	Contactor	LC1D0901M7; Heating
4	209/00041/04	Contactor	LR2-D13109; 4-6A
5	209/00264/00	Protector	LR2-D13149; 7-10A
	209/00265/00	Protector	
6	209/00452/01	Printboard	
7	209/00452/02	Lug Holder	
8	209/00279/00	Lock	
9	204/00005/00	Nut	
10	201/00007/00	Washer	
11	111/00124/00	Mounting Plate	
12	223/00198/00	Grommet	
13	223/00011/00	Hose Clamp	
14	223/00015/00	Elbow	Level switch
15	223/00016/00	Hose Barb	
16	223/00082/00	Pressure Hose	
17	223/00173/10	Pressure Switch Hose Tee	
18	111/00197/00	Mounting Plate	
19	209/00309/02	Thermostat Assembly	
20	225/10004/00	Thermostat Grommet	

© Copyright, Alliance Laundry Systems LLC – DO NOT COPY or TRANSMIT

Electrical Component Mounting Plate - Mechanical Timer

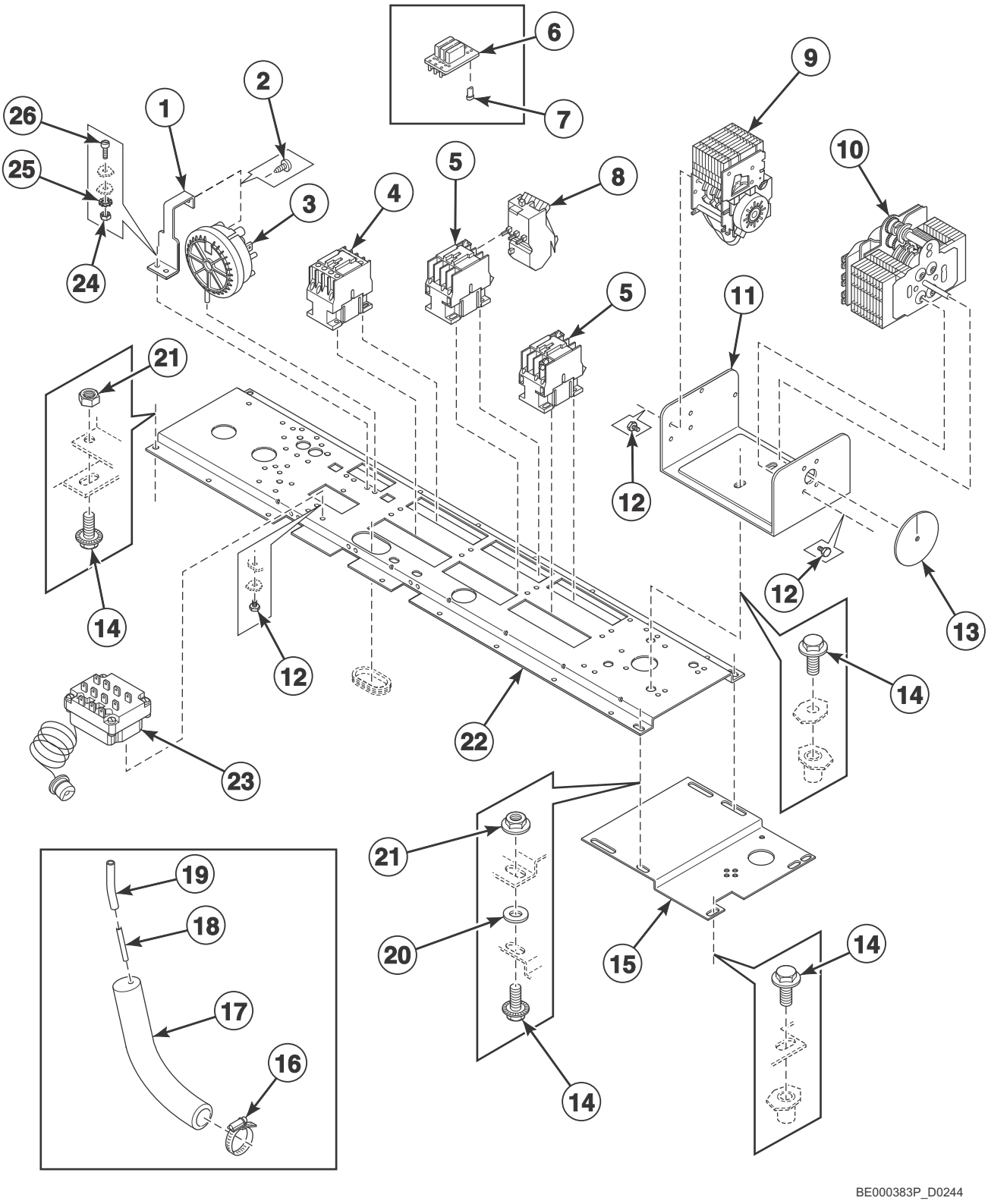

© Copyright, Alliance Laundry Systems LLC – DO NOT COPY or TRANSMIT

Electrical Component Mounting Plate - Mechanical Timer

REF	PART NO.	DESCRIPTION	COMMENTS
1	111/00424/00	Pressure Switch Bracket	
2	208/00007/00	Screw	
3	209/00007/30	Pressure Switch	
4	209/00148/02	Contactor	LC1D1810M7
	209/00041/04	Contactor	LC1D0901M7; Heating
5	209/00041/04	Contactor	
6	209/00452/01	Printboard	
7	209/00452/02	Lug Holder	
8	209/00264/00	Protector	LR2-D13109; 4-6A
	209/00265/00	Protector	LR2-D13149; 7-10A
9	209/00012/00	Reversing Timer	220 Volt/50 Hertz
	209/00013/00	Reversing Timer	220 Volt/60 Hertz
10	209/00107/00	Timer	220 Volt/50 Hertz
	209/00107/00	Timer	220 Volt/60 Hertz
11	111/00016/00	Mounting Plate	
12	206/00021/00	Screw	
13	225/00001/00	Program Indicator	
14	206/00099/00	Bolt	
15	140/00021/00	Electrical Component Extension Plate	
16	223/00011/00	Hose Clamp	
17	223/00015/00	Elbow	Level switch
18	223/00016/00	Hose Barb	
19	223/00082/00	Pressure Hose	
20	201/00006/00	Washer	
21	206/00101/00	Nut	
22	111/00197/00	Mounting Plate	
23	209/00243/00	Thermostat	
24	204/00007/00	Nut	
25	203/00006/00	Washer	
26	207/00008/00	Screw	

© Copyright, Alliance Laundry Systems LLC – DO NOT COPY or TRANSMIT

Electrical Component Mounting Plate - PC30, PS40 and PS40F

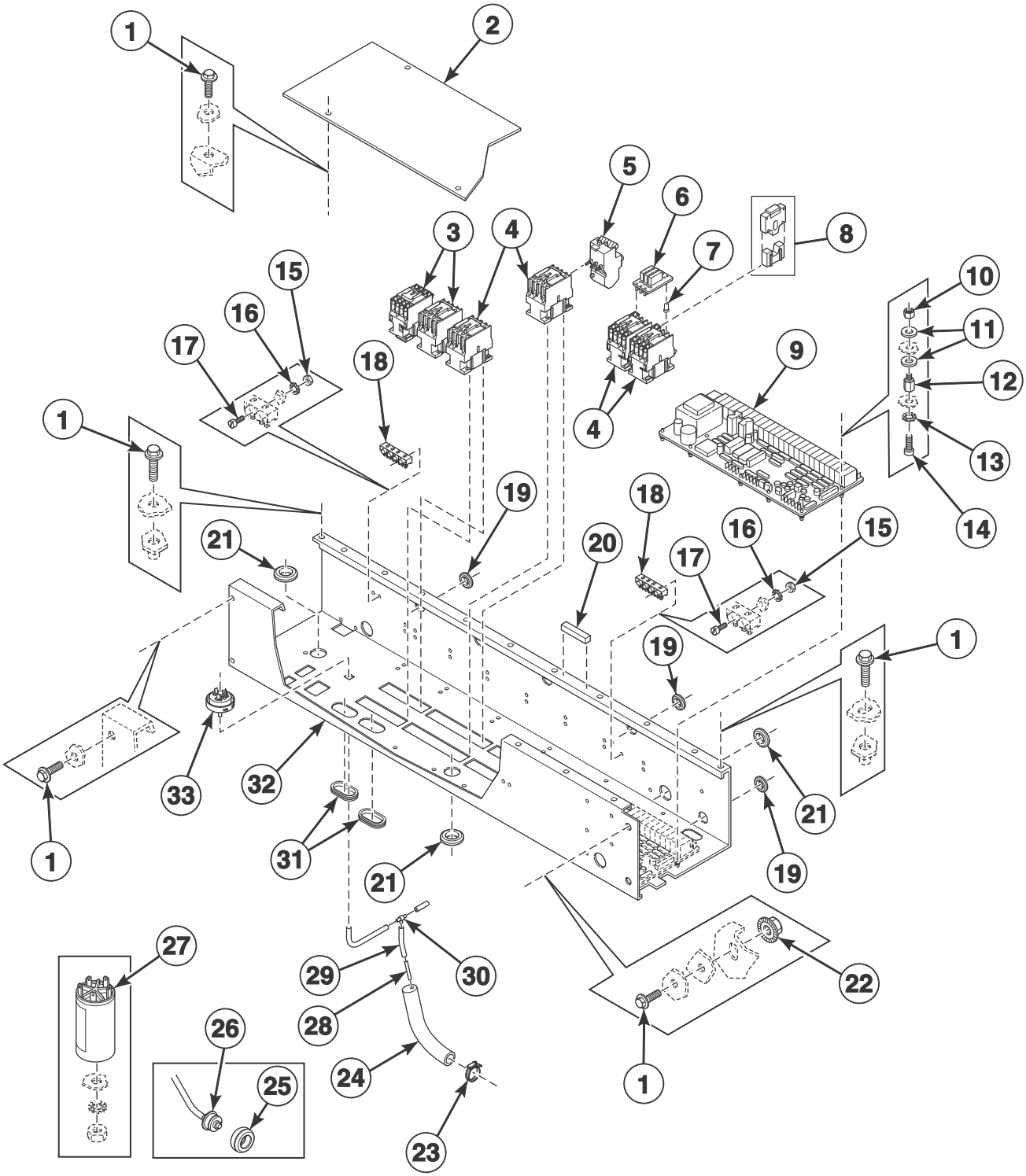

© Copyright, Alliance Laundry Systems LLC – DO NOT COPY or TRANSMIT

Electrical Component Mounting Plate - PC30, PS40 and PS40F

REF	PART NO.	DESCRIPTION	COMMENTS
1	206/00099/00	Bolt	
2	111/00175/01	Cover Plate	
3	209/00148/02	Contactor	
4	209/00041/04	Contactor	
5	209/00264/00	Protector	LR2-D13109; 4-6A
	209/00265/00	Protector	LR2-D13149; 7-10A
6	209/00452/01	Printboard	
7	209/00452/02	Lug Holder	
8	209/00279/00	Lock	
9	209/00323/02	Printboard	Model WE234_PC30
	209/00505/02	Printboard	Model WE234_PS40; 230 Volt
	209/00542/02	Printboard	Model WE234_PS40; 115 Volt
10	204/00116/00	Nut	
11	223/00123/00	Washer	
12	206/00141/00	Separator	
13	203/00007/00	Washer	
14	207/00135/00	Screw	
15	204/00007/00	Nut	
16	203/00006/00	Washer	
17	207/00008/00	Screw	
18	209/00005/00	Terminal Block	
19	223/00174/00	Grommet	
20	246/00092/00	Gasket	
21	223/00198/00	Grommet	
22	206/00105/00	Nut	
23	223/00011/00	Hose Clamp	
24	223/00210/00	Elbow	Pressure switch
25	225/10004/00	Thermostat Grommet	
26	209/00266/08	Thermostat	
27	252/00032/00	Filter	
28	223/00016/00	Hose Barb	
29	223/00212/00	Pressure Switch Hose	
30	223/00173/10	Pressure Switch Hose Tee	
31	223/00203/00	Grommet	
32	111/00256/00	Electrical Component Assembly	
33	209/00007/50	Pressure Switch	

© Copyright, Alliance Laundry Systems LLC – DO NOT COPY or TRANSMIT

Coin Vault

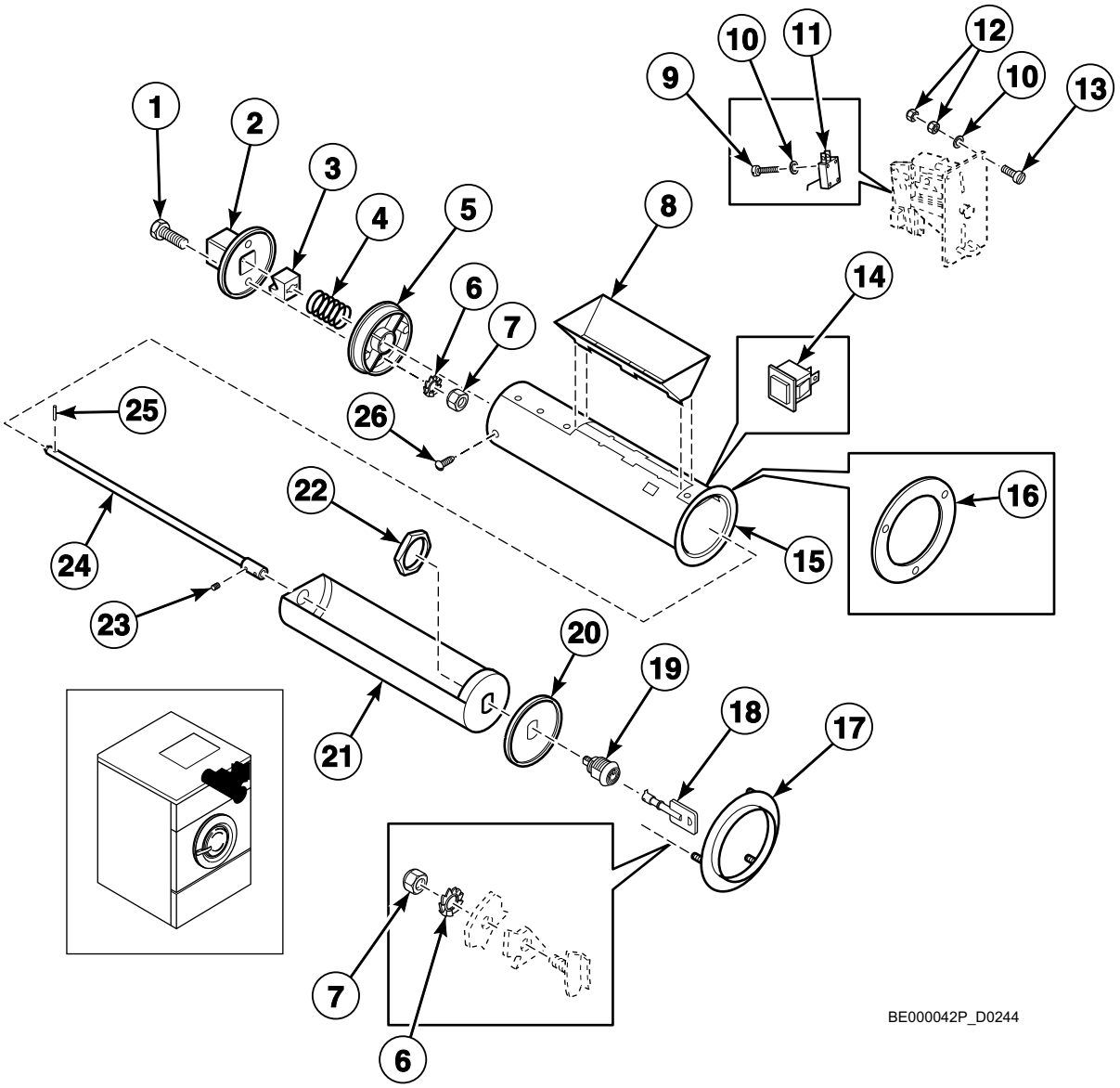

© Copyright, Alliance Laundry Systems LLC – DO NOT COPY or TRANSMIT

Coin Vault

REF	PART NO.	DESCRIPTION	COMMENTS
1	206/00033/00	Bolt	
2	211/00070/01	Outer Cabinet Lock	
3	211/00070/02	Washer	
4	211/00070/04	Spring	
5	211/00070/03	Inner Coin Box	
6	203/00004/00	Washer	
7	204/00005/00	Nut	
8	211/00071/00	Coin Box	
9	207/00009/00	Screw	
10	203/00007/00	Washer	
11	209/00060/12	Coin Drop Microswitch	
12	204/00008/00	Nut	
13	207/00108/00	Screw	
14	209/00396/00	Pushbutton	
15	211/00100/00	Outer Coin Box	
16	111/00100/00	Coin Box Ring Assembly	
17	111/00066/00	Coin Box Ring	
18	211/00065/02	Coin Box Key	
19	211/00065/00	Coin Box Lock	
20	111/00068/00	Front Plate	
21	211/00101/00	Coin Box	
22	211/00065/01	Nut	
23	206/00038/00	Screw	
24	111/00069/00	Spindle	
25	208/00013/00	Roll Pin	
26	208/00007/00	Screw	

© Copyright, Alliance Laundry Systems LLC – DO NOT COPY or TRANSMIT

Coin Meter (Drawing 1 of 2)

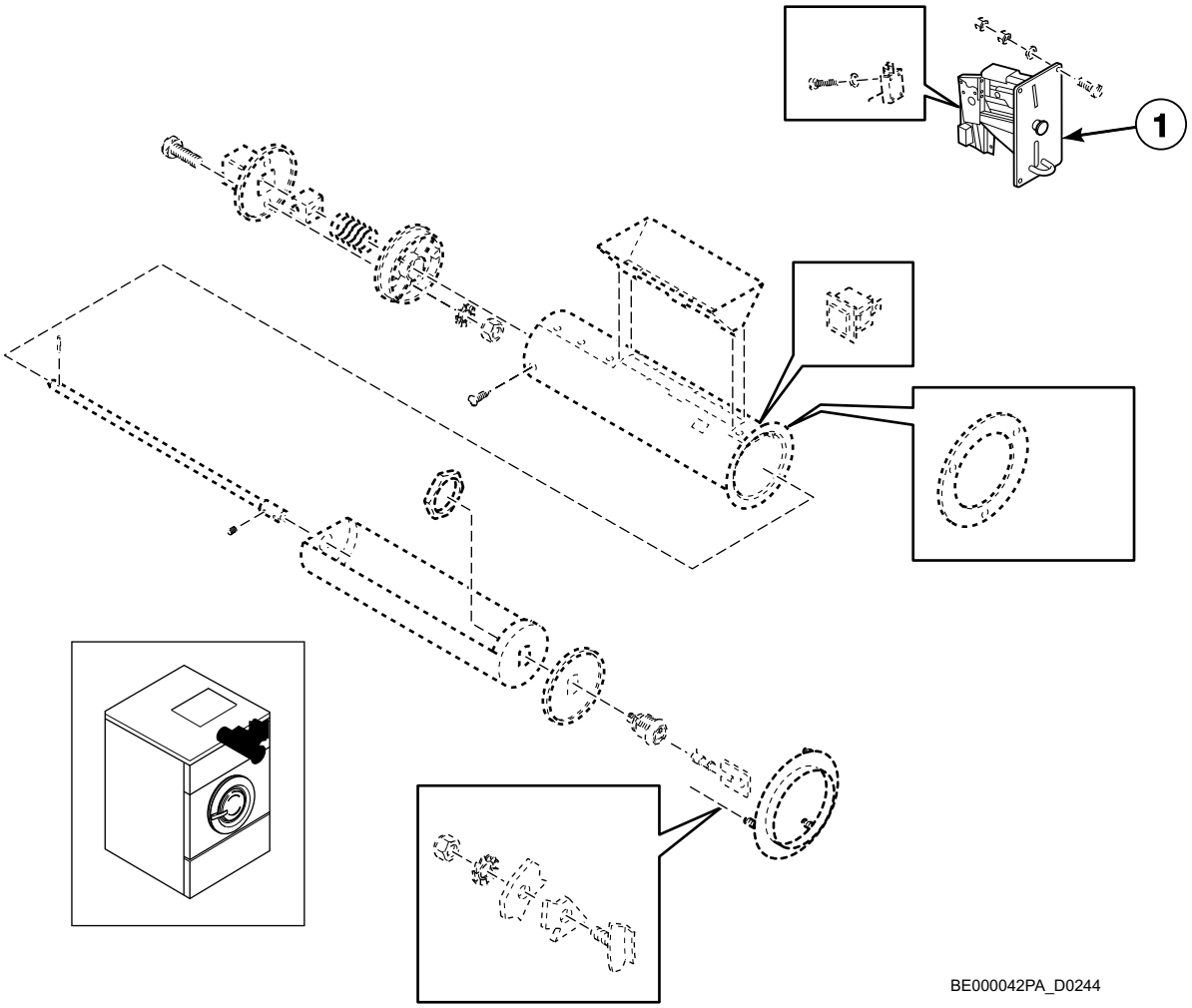

© Copyright, Alliance Laundry Systems LLC – DO NOT COPY or TRANSMIT

Coin Meter (Drawing 1 of 2)

REF	PART NO.	DESCRIPTION	COMMENTS
1	209/00389/00	Coin Meter	.10 euro
	209/00388/00	Coin Meter	.20 euro
	209/00387/00	Coin Meter	.50 euro
	209/00390/00	Coin Meter	1 euro
	209/00391/00	Coin Meter	1 euro (LVN)
	209/00119/00	Coin Meter	.50 and .20 euro
	209/00120/00	Coin Meter	1 and .20 euro
	209/00166/00	Coin Meter	1 and .50 euro
	209/00576/00	Coin Meter	2 and .50 euro
	209/00111/00	Coin Meter	$0.25
	209/00111/10	Coin Meter	$0.25; Laundercenter
	209/00215/00	Coin Meter	.25 Hfl and 1 Hfl
	209/00414/00	Coin Meter	Canada; .25 and 1.00
	209/00214/00	Coin Meter	.25 Hfl
	209/00378/00	Coin Meter	Australia; 1 and 2
	209/00229/00	Coin Meter	Australia; 1 and .20
	209/00403/00	Coin Meter	1 fim and 5 fim
	209/00065/00	Coin Meter	Hong Kong; 1
	209/00418/00	Coin Meter	Malaysia; 1
	209/00364/00	Coin Meter	U.K.; 1 pound and 20 pence
	209/00437/00	Coin Meter	1 rand and 2 rand
	209/00442/00	Coin Meter	1 shekel and 5 shekel
	209/00375/00	Coin Meter	Singapore; 1
	209/00383/00	Coin Meter	New Zealand; 2 and 1
	209/00500/00	Coin Meter	5 Mdh and 10 Mdh
	209/00404/00	Coin Meter	5 NoCr and 10 NoCr
	209/00215/01	Coin Meter	1 Hfl
	209/00402/08	Coin Meter	10 dek and 2 dek
	209/00460/00	Coin Meter	2 dek
	209/00064/00	Coin Meter	Australia; .20
	209/10215/00	Coin Meter	5 Hfl and 1 Hfl
	209/00415/00	Coin Meter	Hong Kong; 5
	209/00501/00	Coin Meter	50 kronur and 100 kronur
	209/00402/01	Coin Meter	Token; .800
	209/00402/03	Coin Meter	Token
	209/00402/07	Coin Meter	Token; Wash Club
	209/00428/00	Coin Meter	Token; Custruzione
	209/00502/00	Coin Meter	Token; Small Mueller
	209/00402/04	Coin Meter	Token; Prinz; 28 x 2.7 mm
	209/00402/02	Coin Meter	Token; Prinz; 22.85 x 2.1 mm
	209/00407/00	Coin Meter	Token; Prinz; 26 x 2.05 mm

© Copyright, Alliance Laundry Systems LLC – DO NOT COPY or TRANSMIT

Coin Meter (Drawing 2 of 2)

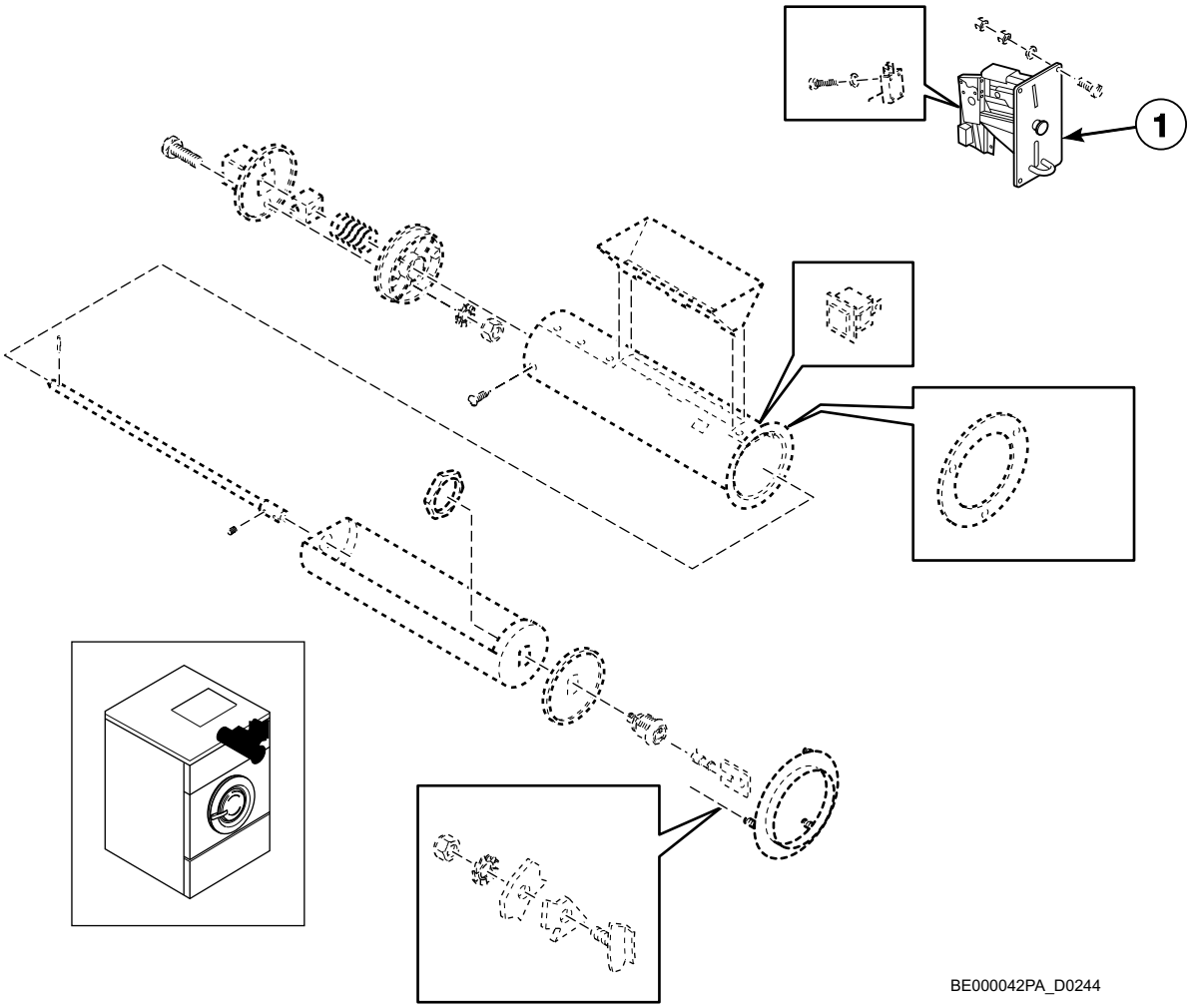

© Copyright, Alliance Laundry Systems LLC – DO NOT COPY or TRANSMIT

Coin Meter (Drawing 2 of 2)

REF	PART NO.	DESCRIPTION	COMMENTS
1	209/00469/00	Coin Meter	Electronic coin meter; NRI
	209/00216/00	Coin Meter	100 yen
	209/00278/00	Coin Meter	100 yen and 500 yen
	209/00373/00	Coin Meter	500 won
	209/00522/00	Coin Meter	Trenner
	209/00060/00	Coin Drop	Token; 5K
	209/00061/00	Coin Meter	Token; 7K
	209/00068/00	Coin Meter	Token; 10K
	209/00069/00	Coin Meter	Token; 12K
	209/00070/00	Coin Meter	Token; 15K
	209/00122/00	Coin Meter	Token; Boissevain
	209/00411/00	Coin Meter	Token; Carsen
	209/00156/00	Coin Meter	Token; Gettone per
	209/00121/00	Coin Meter	Profiled token
	209/00062/00	Coin Meter	Token; Vasketeria
	209/00161/00	Coin Meter	1 dek
	209/00158/00	Coin Meter	1 rail
	209/00160/00	Coin Meter	5 dek
	209/00269/00	Coin Meter	100 won and 500 won
	209/00286/00	Coin Meter	Token; Blanc Club Lavage
	209/00296/00	Coin Meter	Token; Clean Wash
	209/00123/00	Coin Meter	Token; Jessernigg
	209/00162/00	Coin Meter	Token; Vasketeria and 5 DK
	209/00066/00	Coin Meter	Token; Vasketeria and 2 x 1 DK
	209/00072/00	Coin Meter	Token; Wascator
	209/00553/00	Coin Meter	U.S.; $1.00 and .25
	209/00548/00	Coin Meter	100 pesetas and 25 pesetas

© Copyright, Alliance Laundry Systems LLC – DO NOT COPY or TRANSMIT

Right Side, Front, Lower Rear and Top Panels

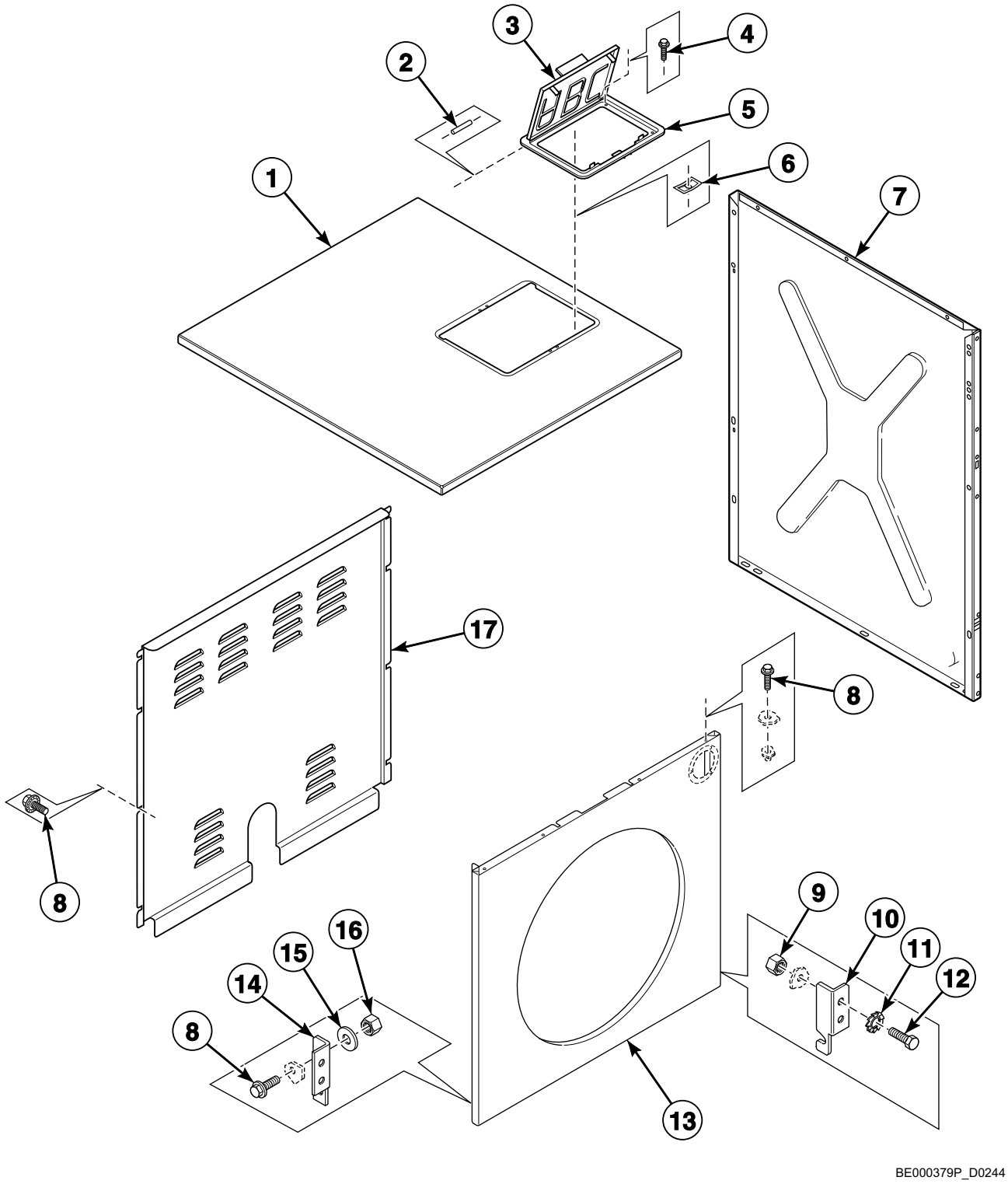

© Copyright, Alliance Laundry Systems LLC – DO NOT COPY or TRANSMIT

Right Side, Front, Lower Rear and Top Panels

REF	PART NO.	DESCRIPTION	COMMENTS
1	140/00045/01	Top Panel	Stainless steel
	140/03045/01	Top Panel	Epoxy
	140/00045/02	Top Panel	Stainless steel with lock
2	223/00103/04	Soap Dispenser Cover Hinge Rod	2 required
3	223/00103/01	Soap Dispenser Cover	
4	207/00131/00	Bolt	
5	223/00103/03	Soap Dispenser Frame	
6	208/00104/00	Nut	
7	140/00007/00	Side Panel	Stainless steel
	140/03007/00	Side Panel	Epoxy
8	206/00099/00	Bolt	
9	204/00107/00	Nut	
10	111/00002/00	Hook	
11	203/00005/00	Washer	
12	206/00016/00	Bolt	
13	140/00006/01	Front Panel	Coin; Stainless steel
	140/00006/02	Front Panel	OPL; Stainless steel
	140/03006/01	Front Panel	Coin; Epoxy
14	111/00001/00	Hook	
15	201/00007/00	Washer	
16	204/00106/00	Nut	
17	140/00009/00	Rear Panel	

© Copyright, Alliance Laundry Systems LLC – DO NOT COPY or TRANSMIT

Left Side, Lower Front and Upper Back Panels

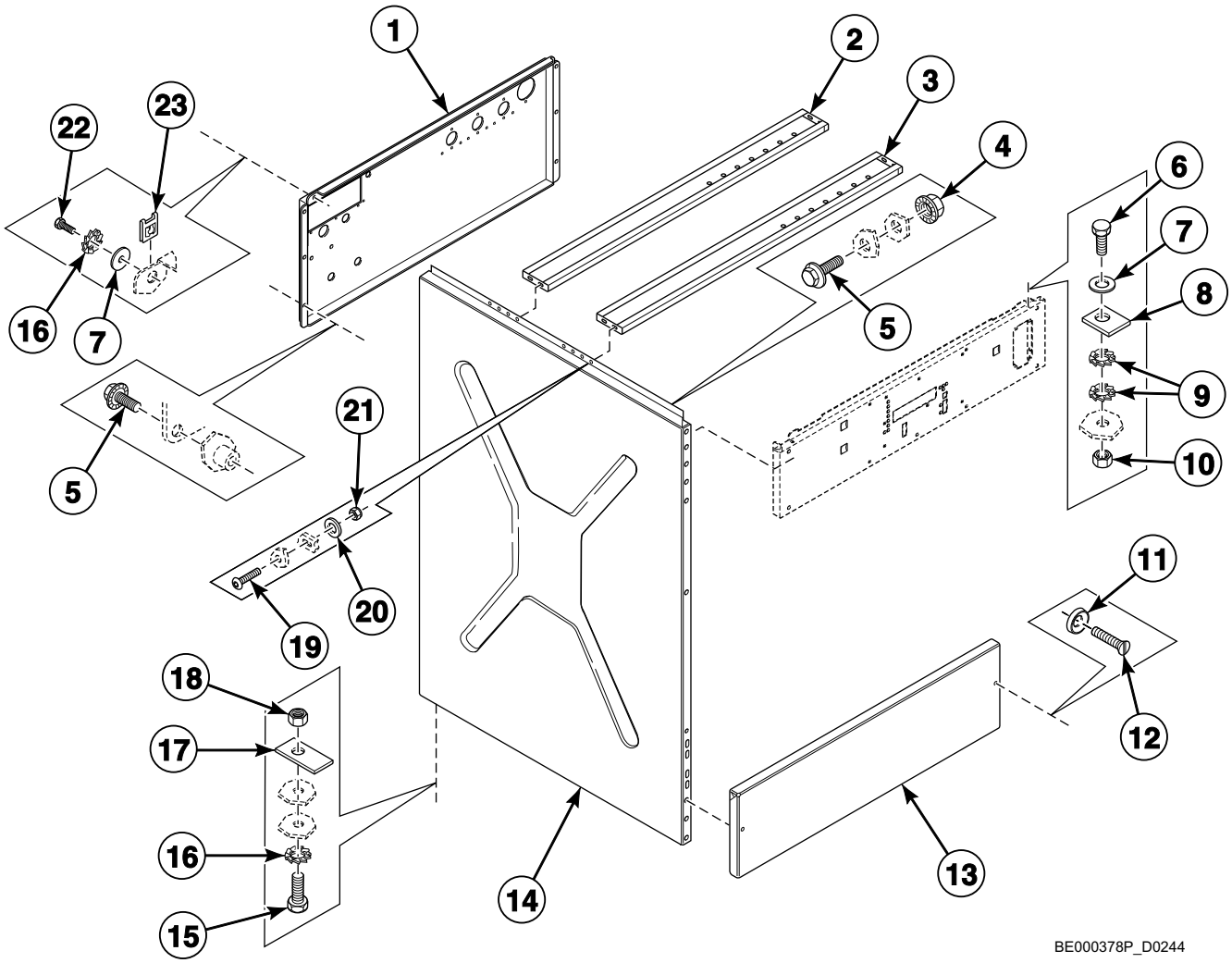

© Copyright, Alliance Laundry Systems LLC – DO NOT COPY or TRANSMIT

Left Side, Lower Front and Upper Back Panels

REF	PART NO.	DESCRIPTION	COMMENTS
1	111/01158/80	Upper Back Panel	
2	111/10102/00	Dispenser Rear Mounting Plate	
3	111/10101/00	Dispenser Front Mounting Plate	
4	206/00101/00	Nut	
5	206/00099/00	Bolt	
6	205/00106/00	Bolt	
7	202/00110/00	Washer	
8	117/00042/00	Retaining Ring	
9	203/00005/00	Washer	
10	204/00107/00	Nut	
11	208/00009/00	Washer	
12	207/00101/00	Screw	
13	140/00008/00	Lower Panel	Stainless steel
	140/03008/00	Lower Panel	Epoxy
14	140/00007/00	Side Panel	Stainless steel
	140/03007/00	Side Panel	Epoxy
15	205/00105/00	Bolt	M6 x 20
	205/00103/00	Bolt	M6 x 25
16	203/00004/00	Washer	
17	111/00063/00	Mounting Plate	
18	204/00106/00	Nut	
19	206/00027/00	Bolt	
20	202/00004/00	Washer	
21	204/00114/00	Nut	
22	208/00001/00	Screw	
23	208/00002/00	Nut	

© Copyright, Alliance Laundry Systems LLC – DO NOT COPY or TRANSMIT

Upper Back Panel (Drawing 1 of 2)

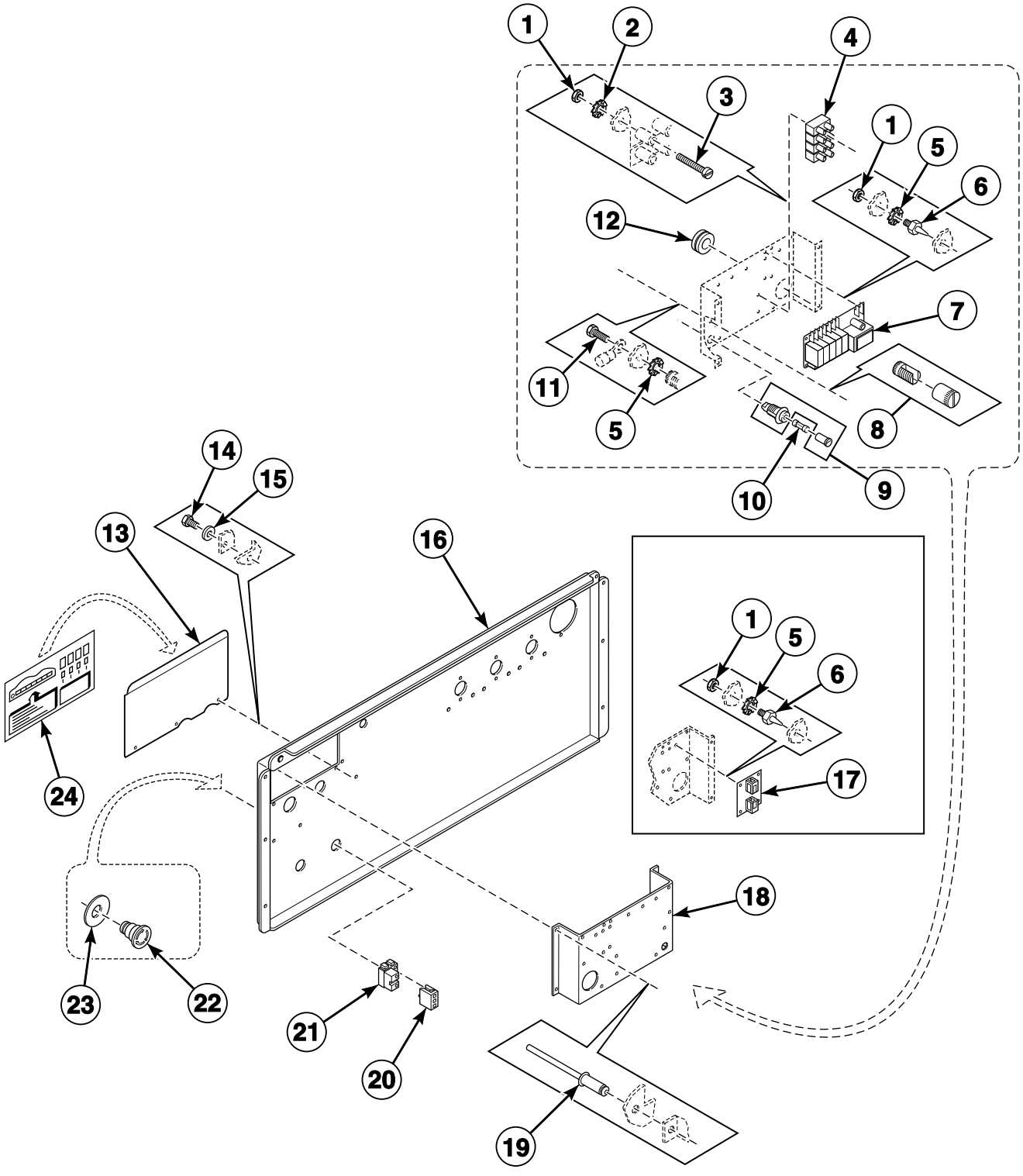

© Copyright, Alliance Laundry Systems LLC – DO NOT COPY or TRANSMIT

Upper Back Panel (Drawing 1 of 2)

REF	PART NO.	DESCRIPTION	COMMENTS
1	204/00007/00	Nut	
2	204/00006/00	Nut	
3	207/00031/00	Screw	
4	209/00058/00	Terminal Block	
5	203/00006/00	Washer	
6	211/00120/00	Standoff	
7	209/00218/03	Printboard	
8	209/00006/01	Ground Terminal	
9	209/00202/00	Fuse Holder	
10	209/00468/00	Fuse	
11	206/00027/00	Bolt	
12	223/00198/00	Grommet	
13	111/00094/10	Electrical Connection Plate	
14	205/00113/00	Bolt	
15	202/00004/00	Washer	
16	111/01158/80	Upper Back Panel	
17	209/00540/00	Network Connection Printboard	
18	111/00188/04	Electrical Connection Plate	
19	208/00017/00	Rivet	
20	209/00099/06	Contact Switch	
21	209/00253/00	Emergency Stop Button Kit	
22	209/00248/00	Mushroom Pushbutton	
23	209/00520/00	Telem Sticker	
24	229/00068/02	Electrical Connection Sticker	

© Copyright, Alliance Laundry Systems LLC – DO NOT COPY or TRANSMIT

Upper Back Panel (Drawing 2 of 2)

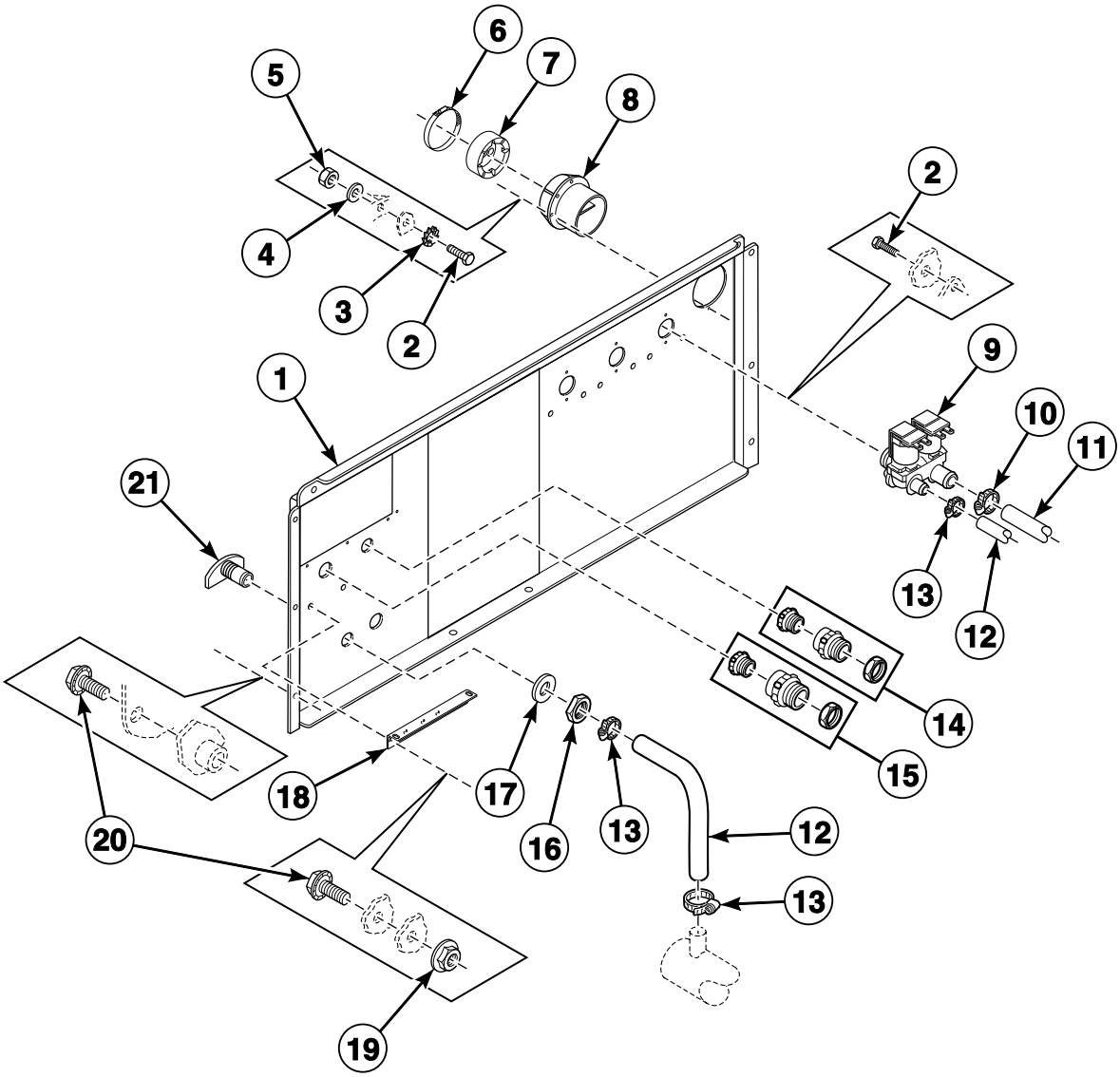

BE000373P_D0244

© Copyright, Alliance Laundry Systems LLC – DO NOT COPY or TRANSMIT

Upper Back Panel (Drawing 2 of 2)

REF	PART NO.	DESCRIPTION	COMMENTS
1	111/01158/30	Backbridge	
2	206/00027/00	Bolt	
3	203/00006/00	Washer	
4	202/00004/00	Washer	
5	204/00007/00	Nut	
6	223/00014/00	Hose Clamp	
7	223/00160/00	Liquid Soap Hose	
8	223/00102/07	Hose Vent	
9	209/00419/00	2-Way Inlet Valve	Standard thread; Used with F380939 Valve Repair Kit
	209/00316/00	2-Way Inlet Valve	Metric thread; Used with F380939 Valve Repair Kit
10	223/00011/00	Hose Clamp	
11	223/00059/00	Water Hose	
12	223/00044/00	Water Hose	
13	223/00010/00	Hose Clamp	
14	211/00123/00	Cordlock	
15	211/00138/00	Cordlock	
16	204/00201/00	Nut	
17	201/00002/00	Washer	
18	111/00198/01	Assembly Plate Support	
19	206/00101/00	Nut	
20	206/00099/00	Bolt	
21	223/00001/04	Prewash and Mainwash Nozzle	

© Copyright, Alliance Laundry Systems LLC – DO NOT COPY or TRANSMIT

Inverter Drive

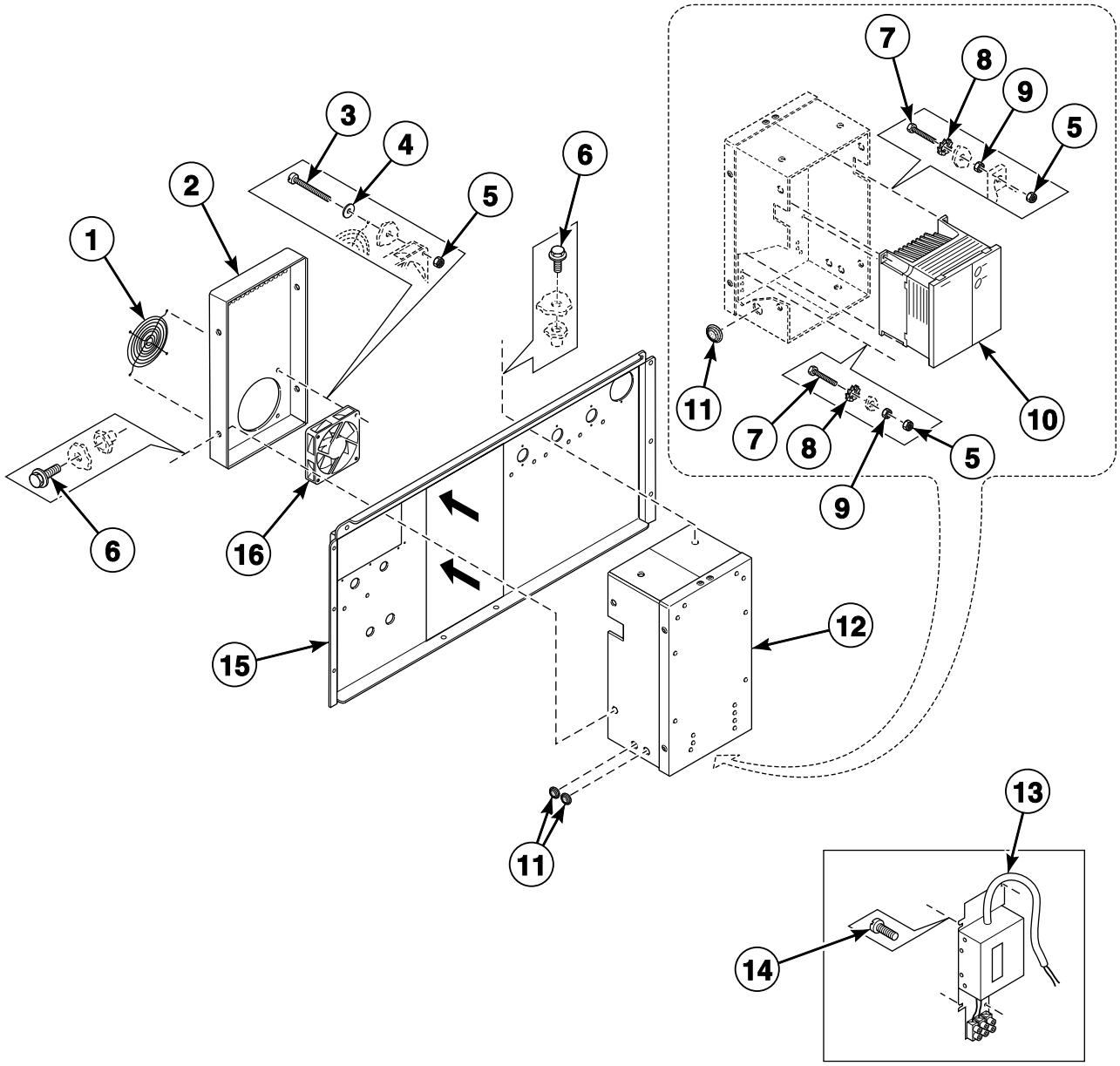

© Copyright, Alliance Laundry Systems LLC – DO NOT COPY or TRANSMIT

Inverter Drive

REF	PART NO.	DESCRIPTION	COMMENTS
	F8410901	Parameter Unit Assembly	Inverter mounted; Used with 500-series inverter drives
	227/00171/00	Parameter Unit Assembly	Hand held
1	209/00287/01	Fan Grill	
2	111/01158/11	Inverter Box Cover	
3	206/00136/00	Bolt	
4	202/00004/00	Washer	
5	204/00114/00	Nut	
6	206/00099/00	Bolt	
7	207/00031/00	Screw	
8	203/00006/00	Washer	
9	204/00007/00	Nut	
10	F8421211	Inverter Drive Kit	200 Volt/1 Phase; Used to convert from 500 to 700 series inverter drive; Includes F8421311 Inverter Drive, F8409501 Mounting Plate Assembly and F430903 Screw
	F8421212	Inverter Drive Kit	400 Volt/3 Phase; Used to convert from 500 to 700 series inverter drive; Includes F8421312 Inverter Drive, F8409501 Mounting Plate Assembly and F430903 Screw
	F8421311	Inverter Drive	200 Volt/1 Phase; 700 series
	F8421312	Inverter Drive	400 Volt/3 Phase; 700 series
11	223/00174/00	Grommet	
12	111/01149/00	Inverter Drive Box	
13	227/00165/00	Noise Filter	
14	207/00004/00	Screw	
15	111/01158/30	Backbridge	
16	209/00287/00	Cooling Fan	

N/A = Part no longer available

© Copyright, Alliance Laundry Systems LLC – DO NOT COPY or TRANSMIT

Supply Dispenser - Models Through 12/31/92 with 1.5 Inch Supply Dispenser Hose

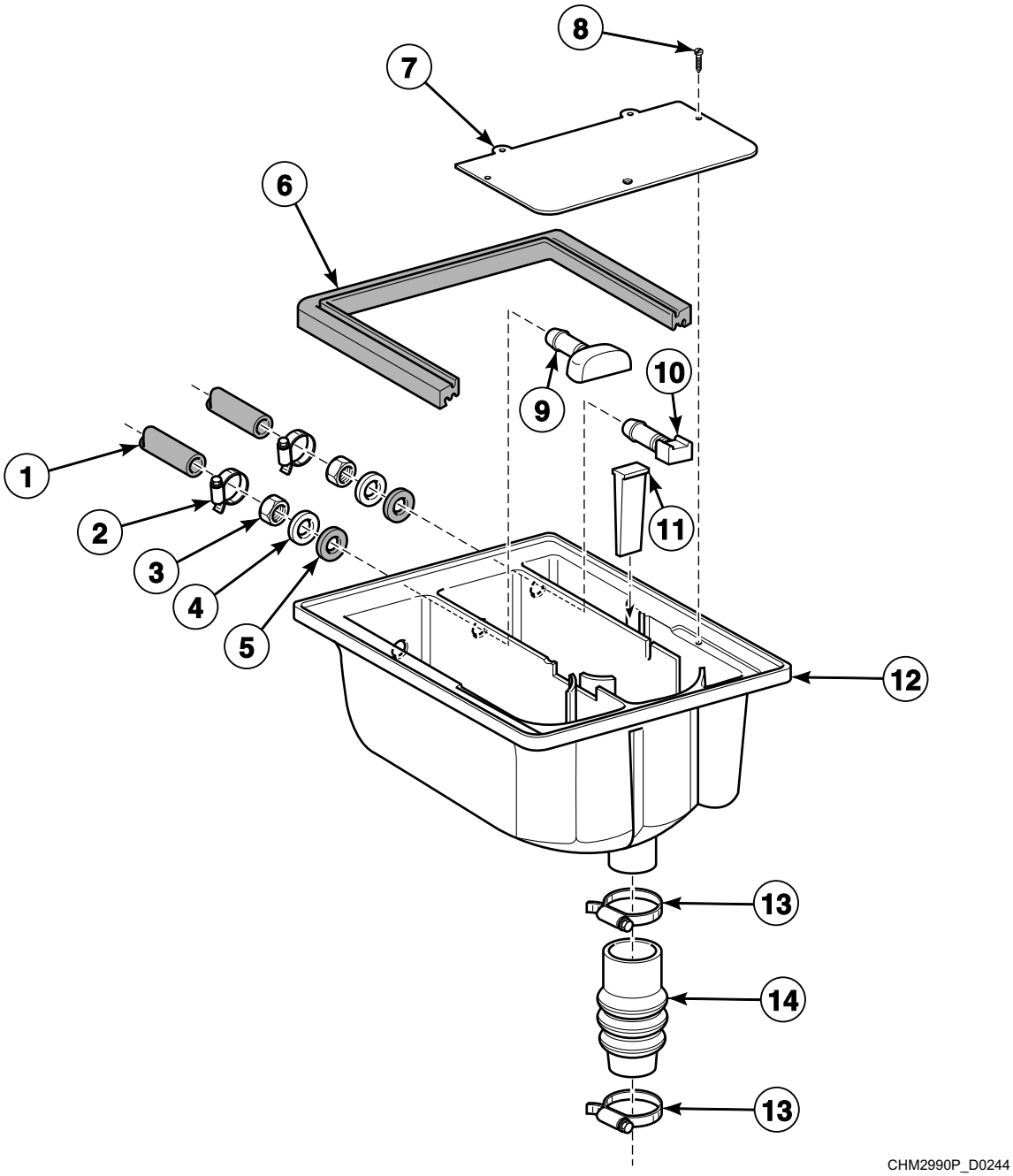

© Copyright, Alliance Laundry Systems LLC – DO NOT COPY or TRANSMIT

Supply Dispenser - Models Through 12/31/92 with 1.5 Inch Supply Dispenser Hose

REF	PART NO.	DESCRIPTION	COMMENTS
1	223/00044/00	Water Hose	
2	223/00010/00	Hose Clamp	
3	204/00201/00	Nut	
4	201/00002/00	Washer	
5	223/00001/07	Washer	
6	223/00003/00	Lid Seal	
7	223/00001/06	Mounting Plate	
8	B12347501	Screw	
9	223/00001/04	Prewash and Mainwash Nozzle	
10	223/00001/05	Injector	
11	223/00001/03	Separator Plate	
12	223/00001/01	Soap Dispenser	
13	223/00013/00	Hose Clamp	
14	223/00007/00	Hose	

© Copyright, Alliance Laundry Systems LLC – DO NOT COPY or TRANSMIT

Supply Dispenser - *Models Through 12/31/92 with 4 Inch Supply Dispenser Hose

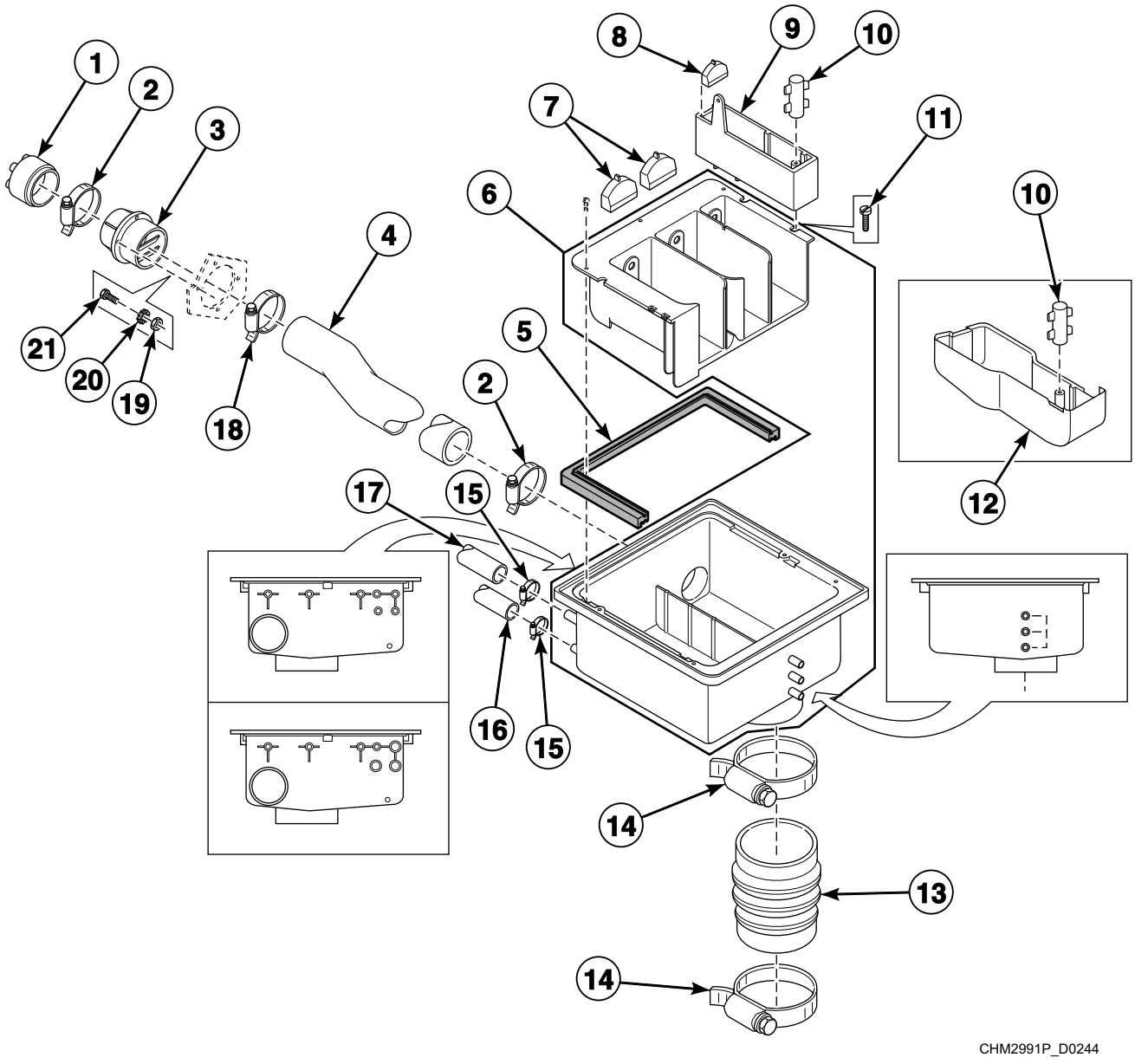

© Copyright, Alliance Laundry Systems LLC – DO NOT COPY or TRANSMIT

Supply Dispenser - *Models Through 12/31/92 with 4 Inch Supply Dispenser Hose

REF	PART NO.	DESCRIPTION	COMMENTS
1	223/00160/00	Liquid Soap Hose	
2	223/00014/00	Hose Clamp	
3	223/00102/07	Hose Vent	
4	223/00107/01	Ventilating Hose	
5	223/00109/00	Soap Dispenser Gasket	
6	223/00102/40	Exterior Box	
7	223/00102/06	Soap Spray Nozzle	
8	223/00102/05	Softener Spray Nozzle	
9	223/00102/03	Rinse Insert	
10	223/00102/04	Soap Dispenser Rinse Siphon	
11	B12347501	Screw	
12	223/00102/08	Liquid Soap Dispenser Insert	
13	223/00115/00	Hose	
14	223/00023/00	Hose Clamp	
15	223/00009/00	Clamp	
16	223/00059/00	Water Hose	20 mm diameter
17	223/00188/00	Hose	25 mm diameter
18	223/00013/00	Hose Clamp	
19	204/00105/00	Nut	
20	203/00008/00	Washer	
21	207/00106/00	Screw	

© Copyright, Alliance Laundry Systems LLC – DO NOT COPY or TRANSMIT

Supply Dispenser - Models Starting 1/1/93

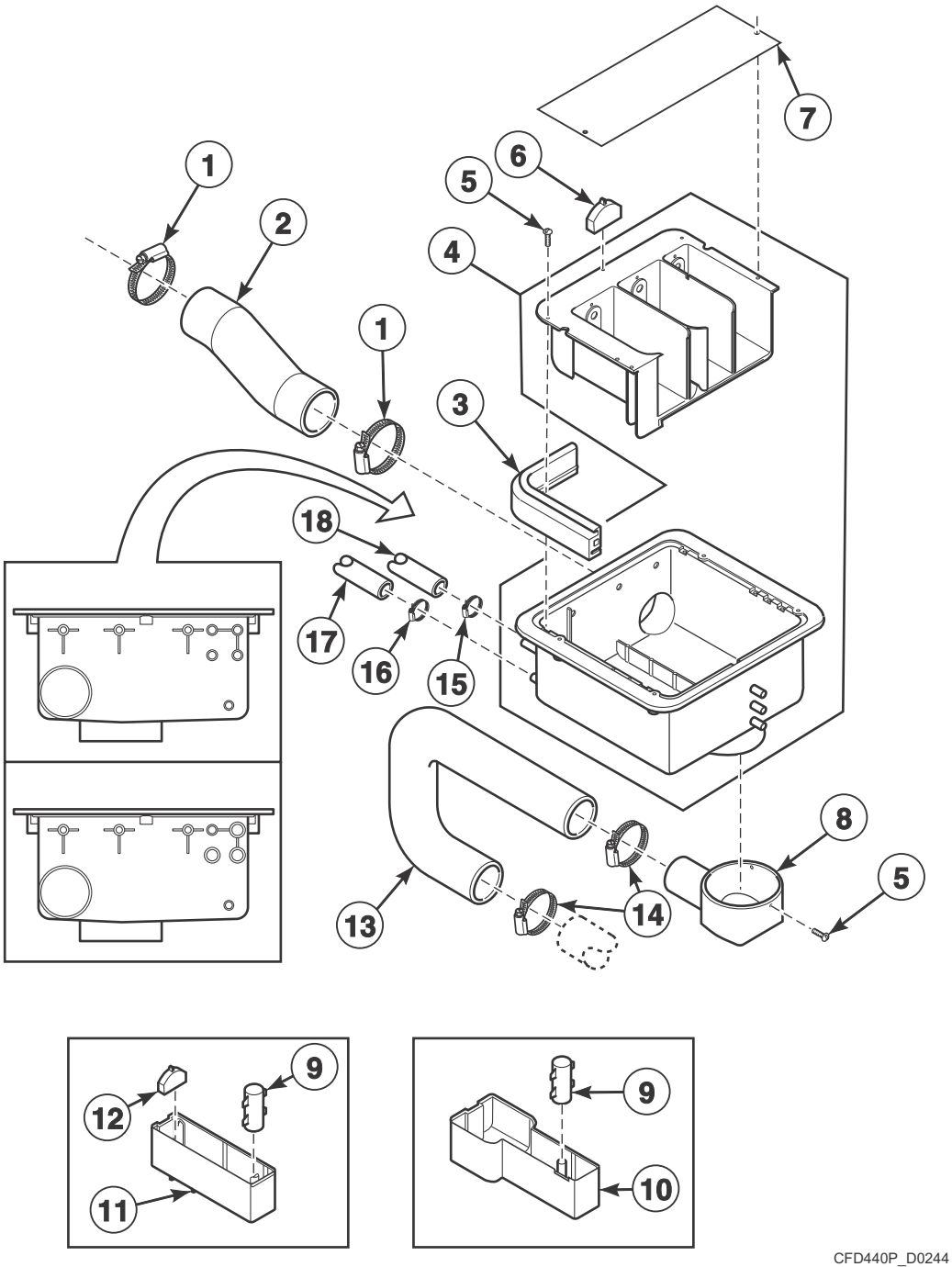

© Copyright, Alliance Laundry Systems LLC – DO NOT COPY or TRANSMIT

Supply Dispenser - Models Starting 1/1/93

REF	PART NO.	DESCRIPTION	COMMENTS
1	223/00014/00	Hose Clamp	
2	223/00107/06	Vent Hose	
3	223/00109/00	Soap Dispenser Gasket	
4	223/00102/70	Soap Dispenser	Includes pipe
	223/00102/40	Exterior Box	
5	B12347501	Screw	
6	223/00102/06	Soap Spray Nozzle	
7	123/00107/00	Anti-Splash Plate	Sigma models
	123/00103/06	Soap Box Assembly Plate	All other models
8	223/00196/00	Dispenser Drain Funnel	
9	223/00102/04	Soap Dispenser Rinse Siphon	
10	223/00102/08	Liquid Soap Dispenser Insert	
11	223/00102/03	Rinse Insert	
12	223/00102/05	Softener Spray Nozzle	
13	223/00220/00	Soap Dispenser Hose	
14	223/00071/00	Hose Clamp	
15	223/00011/00	Hose Clamp	
16	223/00010/00	Hose Clamp	
17	223/00059/00	Water Hose	
18	223/00044/00	Water Hose	

© Copyright, Alliance Laundry Systems LLC – DO NOT COPY or TRANSMIT

Micro 20 Control Panel Decal (Drawing 1 of 5)

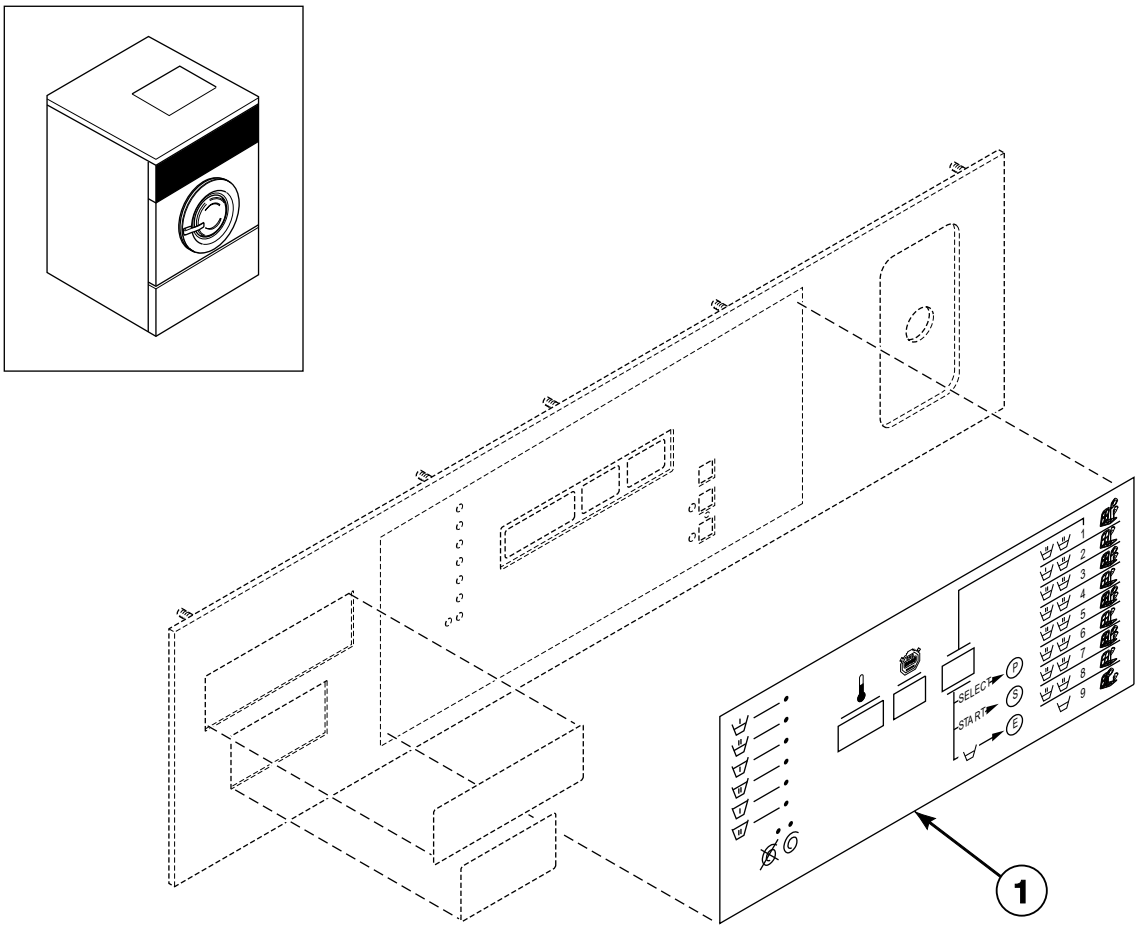

BE000398P_D0244

© Copyright, Alliance Laundry Systems LLC – DO NOT COPY or TRANSMIT

Micro 20 Control Panel Decal (Drawing 1 of 5)

REF	PART NO.	DESCRIPTION	COMMENTS
1	225/00366/00	Label	
	225/00250/00	Label	
	225/00371/00	Label	
	325/00321/00	Sticker	
	225/00339/00	Label	
	325/00324/00	Label	
	225/00344/00	Label	
	225/00335/00	Label	
	225/00364/00	Label	
	225/00325/00	Label	
	225/00374/00	Label	
	225/00308/00	Sticker	
	225/00341/00	Sticker	
	225/00419/00	Sticker	
	225/00342/00	Label	
	225/00310/00	Label	
	225/00351/00	Label	
	225/00345/00	Label	
	225/00386/00	Sticker	
	225/00349/00	Label	
	225/00309/00	Sticker	
	225/00382/00	Label	
	225/00385/00	Label	
	225/00311/00	Label	
	225/00387/00	Sticker	
	225/00352/00	Label	
	325/00323/00	Label	
	225/00363/00	Label	
	225/00343/00	Label	
	225/00304/00	Front Panel	

© Copyright, Alliance Laundry Systems LLC – DO NOT COPY or TRANSMIT

Micro 20 Control Panel Decal (Drawing 2 of 5)

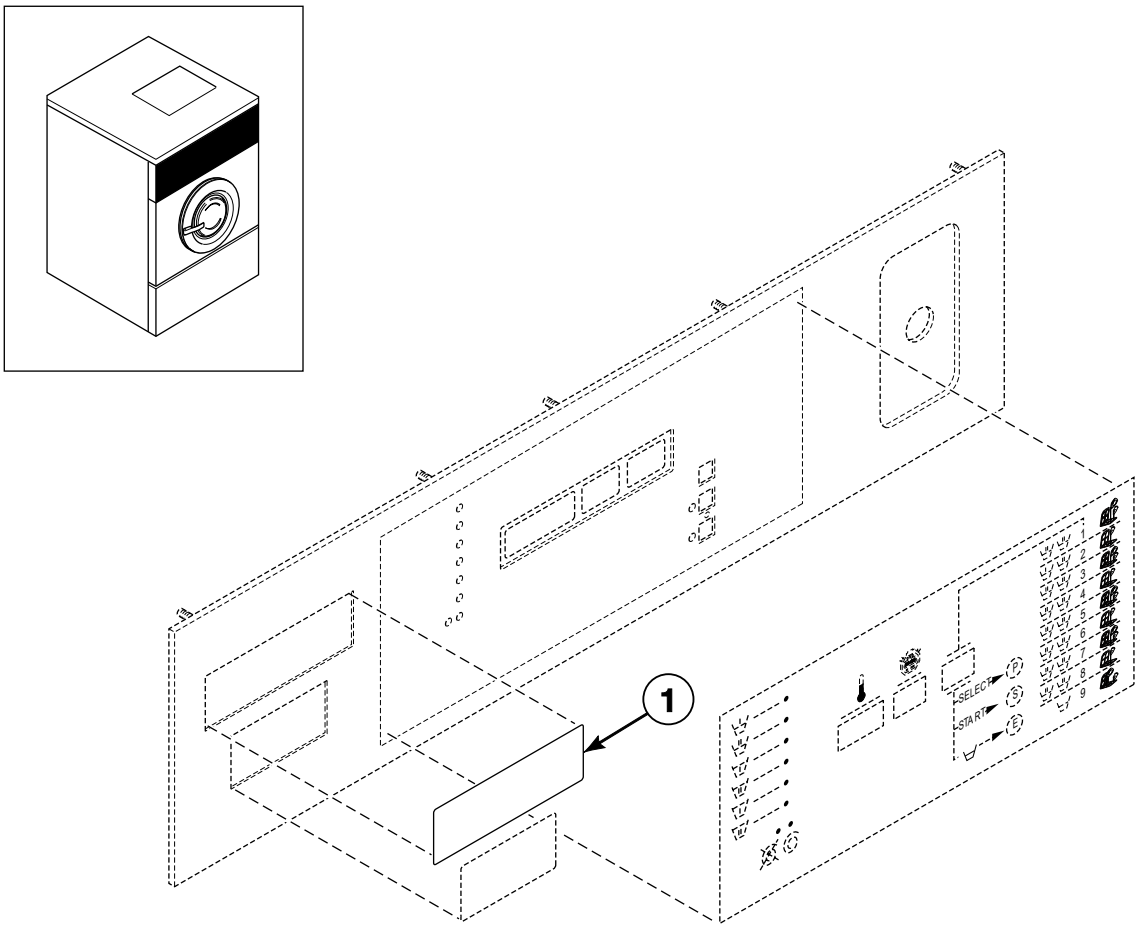

BE000398PA_D0244

© Copyright, Alliance Laundry Systems LLC – DO NOT COPY or TRANSMIT

Micro 20 Control Panel Decal (Drawing 2 of 5)

REF	PART NO.	DESCRIPTION	COMMENTS
1	225/10132/00	Front Label	
	225/10158/00	Front Label	
	325/00239/00	Front Label	
	225/10228/00	Front Label	
	225/10129/00	Front Label	
	225/10063/00	Front Label	
	325/10095/00	Front Label	
	225/10045/00	Front Label	
	225/10032/00	Front Label	
	225/10033/00	Front Label	
	225/10231/00	Front Label	
	325/10087/00	Front Label	
	225/10064/00	Front Label	
	225/10176/00	Front Label	
	225/10210/00	Front Label	
	225/10101/00	Front Label	
	225/10038/00	Front Label	
	225/10100/00	Front Label	
	225/10249/00	Front Label	
	225/10248/00	Front Label	
	225/10193/00	Front Label	
	325/10091/00	Front Label	
	225/10072/00	Front Label	
	225/10153/00	Front Label	
	225/10042/00	Front Label	
	225/10089/00	Front Label	
	225/10243/00	Front Label	
	225/10168/00	Front Label	
	225/10071/00	Front Label	
	225/10229/00	Front Label	
	225/10043/00	Front Label	
	225/10044/00	Front Label	
	225/10177/00	Front Label	
	325/10102/00	Front Label	
	225/10065/00	Front Label	

© Copyright, Alliance Laundry Systems LLC – DO NOT COPY or TRANSMIT

Micro 20 Control Panel Decal (Drawing 3 of 5)

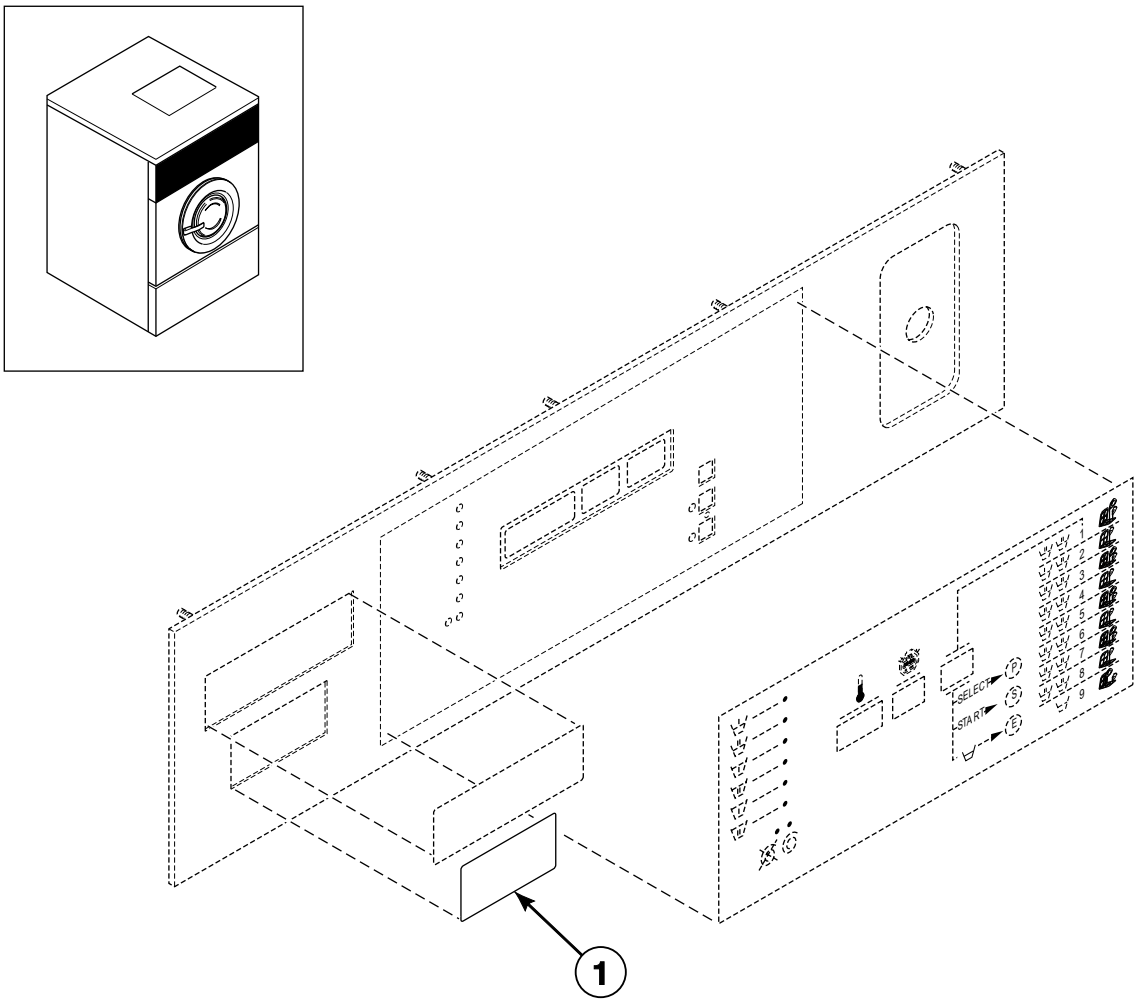

BE000398PB_D0244

© Copyright, Alliance Laundry Systems LLC – DO NOT COPY or TRANSMIT

Micro 20 Control Panel Decal (Drawing 3 of 5)

REF	PART NO.	DESCRIPTION	COMMENTS
1	229/00257/00	Front Label	
	225/10161/00	Front Label	
	225/10200/00	Front Label	
	225/10164/00	Front Label	
	225/10201/00	Front Label	
	225/10194/00	Front Label	
	225/10109/00	Front Label	
	225/10128/00	Front Label	
	225/10114/00	Front Label	
	225/10126/00	Front Label	
	225/10195/00	Front Label	
	225/10127/00	Front Label	
	225/10110/00	Front Label	
	225/10125/00	Front Label	
	225/10159/00	Front Label	
	225/10111/00	Front Label	
	225/10124/00	Front Label	
	225/10162/00	Front Label	
	225/10112/00	Front Label	
	225/10049/00	Front Label	
	225/10202/00	Front Label	
	225/10102/00	Front Label	
	225/10050/00	Front Label	
	225/10113/00	Front Label	
	225/10103/00	Front Label	
	225/10203/00	Front Label	
	225/10055/00	Front Label	
	225/10051/00	Front Label	
	225/10204/00	Front Label	
	225/10052/00	Front Label	
	225/10104/00	Front Label	
	225/10199/00	Front Label	
	225/10053/00	Front Label	
	225/10105/00	Front Label	
	225/10157/00	Front Label	
	225/10106/00	Front Label	
	225/10246/00	Front Label	
	225/10115/00	Front Label	
	225/10107/00	Front Label	
	225/10056/00	Front Label	
	225/10233/00	Front Label	

© Copyright, Alliance Laundry Systems LLC – DO NOT COPY or TRANSMIT

Micro 20 Control Panel Decal (Drawing 4 of 5)

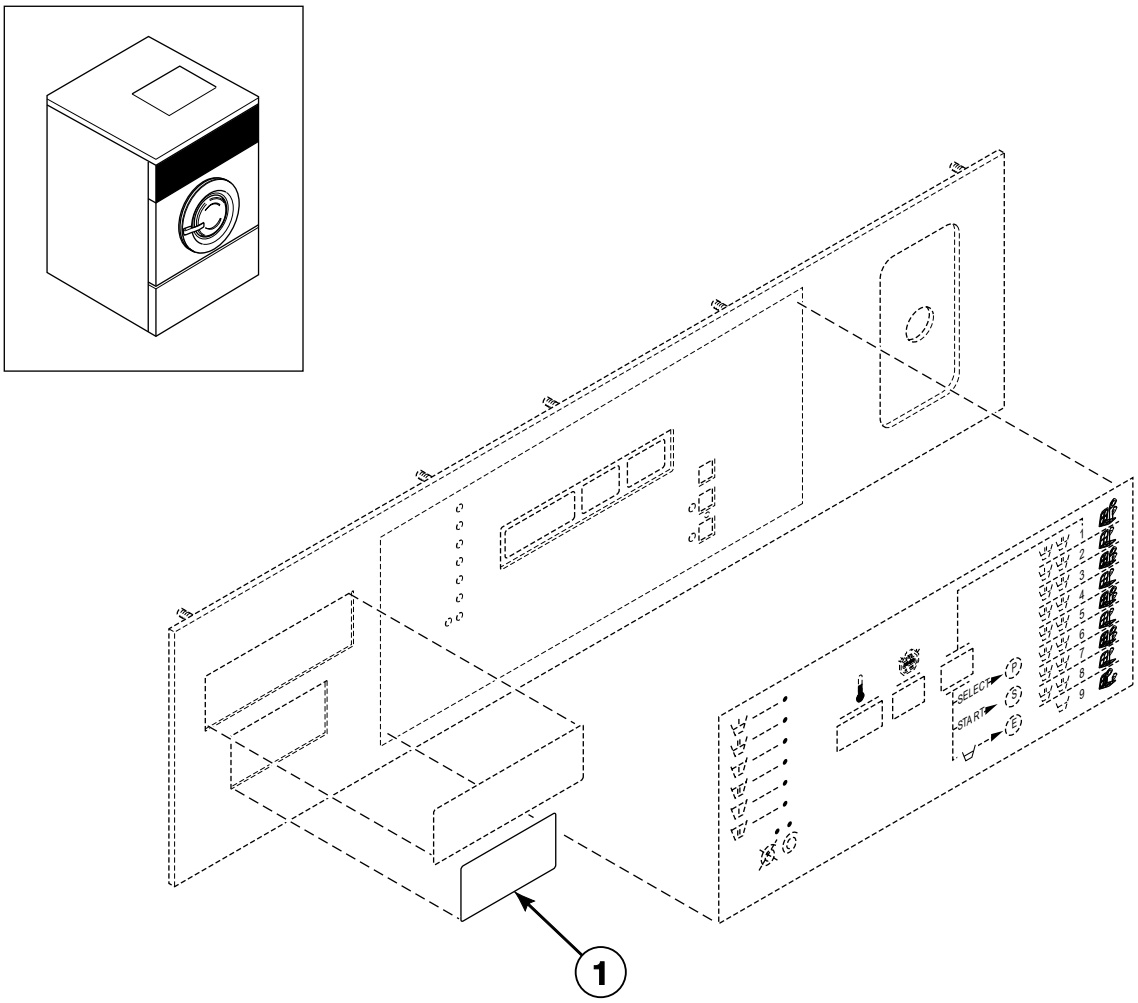

BE000398PB_D0244

© Copyright, Alliance Laundry Systems LLC – DO NOT COPY or TRANSMIT

Micro 20 Control Panel Decal (Drawing 4 of 5)

REF	PART NO.	DESCRIPTION	COMMENTS
1	225/10232/00	Front Label	
	225/10108/00	Front Label	
	225/10244/00	Front Label	
	225/10160/00	Front Label	
	225/10131/00	Front Label	
	225/10116/00	Front Label	
	225/10245/00	Front Label	
	225/10121/00	Front Label	
	225/10074/00	Front Label	
	225/10067/00	Front Label	
	225/10075/00	Front Label	
	225/10073/00	Front Label	
	225/10090/00	Front Label	
	225/10068/00	Front Label	
	225/10080/00	Front Label	
	225/10097/00	Front Label	
	225/10069/00	Front Label	
	225/10145/00	Front Label	
	225/10087/00	Front Label	
	225/10134/00	Front Label	
	225/10093/00	Front Label	
	225/10182/00	Front Label	
	225/10081/00	Front Label	
	225/10135/00	Front Label	
	225/10082/00	Front Label	
	225/10098/00	Front Label	
	225/10183/00	Front Label	
	225/10136/00	Front Label	
	225/10083/00	Front Label	
	225/10184/00	Front Label	
	225/10137/00	Front Label	
	225/10241/00	Front Label	
	225/10185/00	Front Label	
	225/10138/00	Front Label	
	225/10242/00	Front Label	
	225/10178/00	Front Label	
	225/10123/00	Front Label	
	225/10230/00	Front Label	
	225/10198/00	Front Label	
	225/10152/00	Front Label	
	225/10179/00	Front Label	

© Copyright, Alliance Laundry Systems LLC – DO NOT COPY or TRANSMIT

Micro 20 Control Panel Decal (Drawing 5 of 5)

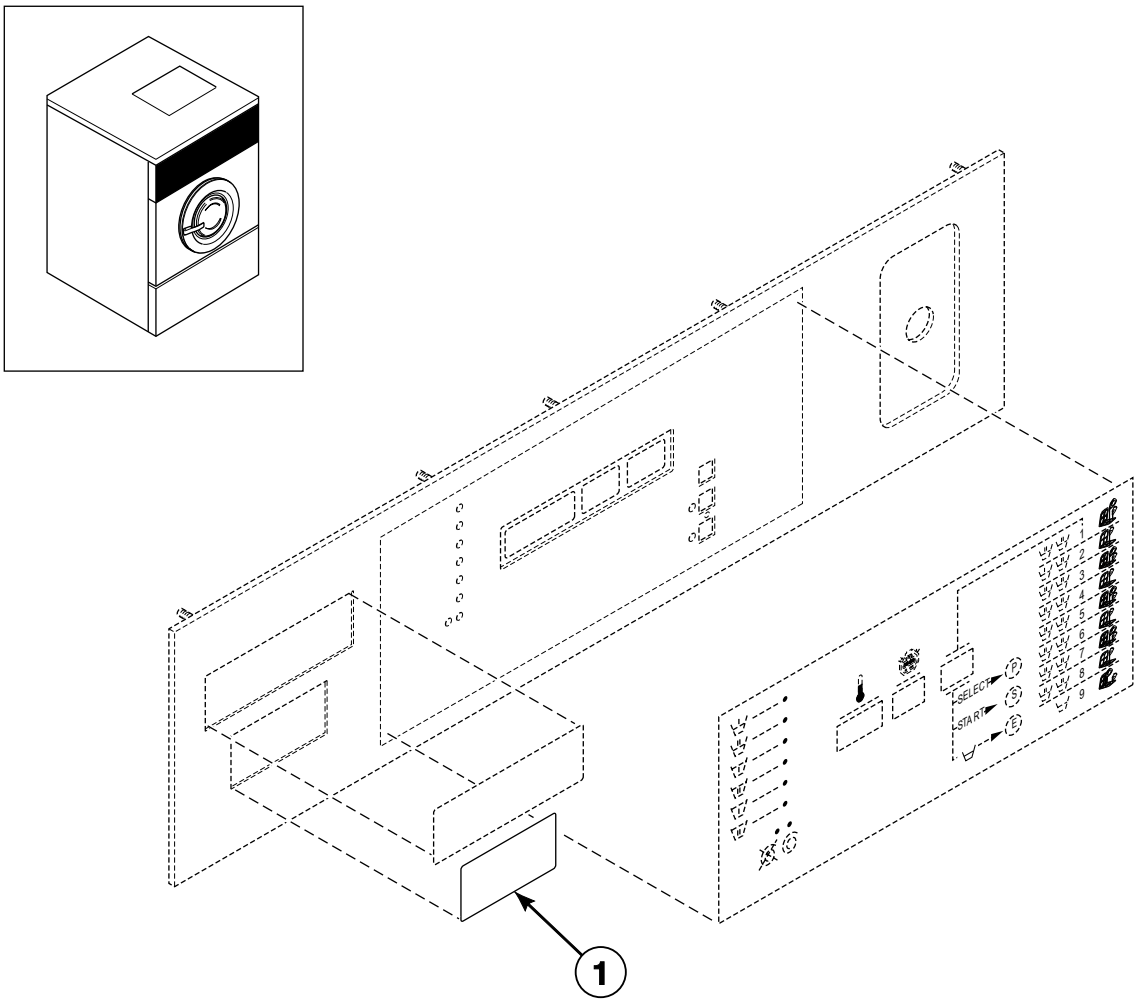

BE000398PB_D0244

© Copyright, Alliance Laundry Systems LLC – DO NOT COPY or TRANSMIT

Micro 20 Control Panel Decal (Drawing 5 of 5)

REF	PART NO.	DESCRIPTION	COMMENTS
1	225/10154/00	Front Label	
	225/10180/00	Front Label	
	225/10155/00	Front Label	
	225/10181/00	Front Label	
	225/10156/00	Front Label	
	225/10219/00	Front Label	
	225/10220/00	Front Label	
	225/10221/00	Front Label	
	225/10222/00	Front Label	
	225/10223/00	Front Label	
	225/10224/00	Front Label	
	225/10226/00	Front Label	
	225/10227/00	Front Label	
	225/10205/00	Front Label	
	225/10206/00	Front Label	
	225/10207/00	Front Label	
	225/10208/00	Front Label	
	225/10209/00	Front Label	
	225/10146/00	Front Label	
	225/10148/00	Front Label	
	225/10150/00	Front Label	
	225/10147/00	Front Label	
	225/10149/00	Front Label	
	225/10151/00	Front Label	
	225/10169/00	Front Label	
	225/10170/00	Front Label	
	225/10171/00	Front Label	
	225/10172/00	Front Label	
	225/10173/00	Front Label	
	225/10174/00	Front Label	
	225/10175/00	Front Label	
	225/10196/00	Front Label	
	225/10235/00	Front Label	
	225/10236/00	Front Label	
	225/10237/00	Front Label	
	225/10238/00	Front Label	
	225/10239/00	Front Label	
	225/10240/00	Front Label	
	225/10250/00	Front Label	
	225/10251/00	Front Label	
	225/10247/00	Front Label	

© Copyright, Alliance Laundry Systems LLC – DO NOT COPY or TRANSMIT

Mechanical Timer Control Panel Decal (Drawing 1 of 2)

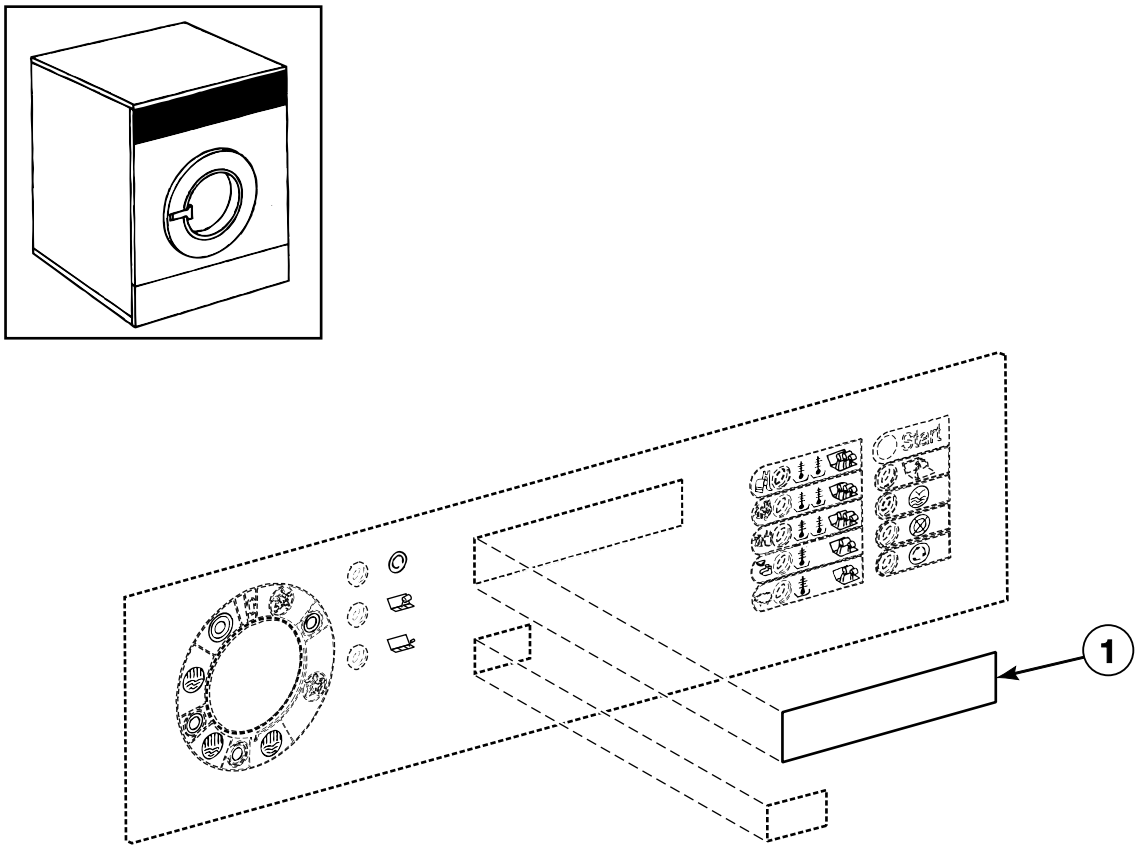

BE000400P_D0244

© Copyright, Alliance Laundry Systems LLC – DO NOT COPY or TRANSMIT

Mechanical Timer Control Panel Decal (Drawing 1 of 2)

REF	PART NO.	DESCRIPTION	COMMENTS
1	225/10132/00	Front Label	
	225/10158/00	Front Label	
	325/00239/00	Front Label	
	225/10228/00	Front Label	
	225/10129/00	Front Label	
	225/10063/00	Front Label	
	325/10095/00	Front Label	
	225/10045/00	Front Label	
	225/10032/00	Front Label	
	225/10033/00	Front Label	
	225/10231/00	Front Label	
	325/10087/00	Front Label	
	225/10064/00	Front Label	
	225/10176/00	Front Label	
	225/10210/00	Front Label	
	225/10101/00	Front Label	
	225/10038/00	Front Label	
	225/10100/00	Front Label	
	225/10249/00	Front Label	
	225/10248/00	Front Label	
	225/10193/00	Front Label	
	325/10091/00	Front Label	
	225/10072/00	Front Label	
	225/10153/00	Front Label	
	225/10042/00	Front Label	
	225/10089/00	Front Label	
	225/10243/00	Front Label	
	225/10168/00	Front Label	
	225/10071/00	Front Label	
	225/10229/00	Front Label	
	225/10043/00	Front Label	
	225/10044/00	Front Label	
	225/10177/00	Front Label	
	325/10102/00	Front Label	
	225/10065/00	Front Label	

© Copyright, Alliance Laundry Systems LLC – DO NOT COPY or TRANSMIT

Mechanical Timer Control Panel Decal (Drawing 2 of 2)

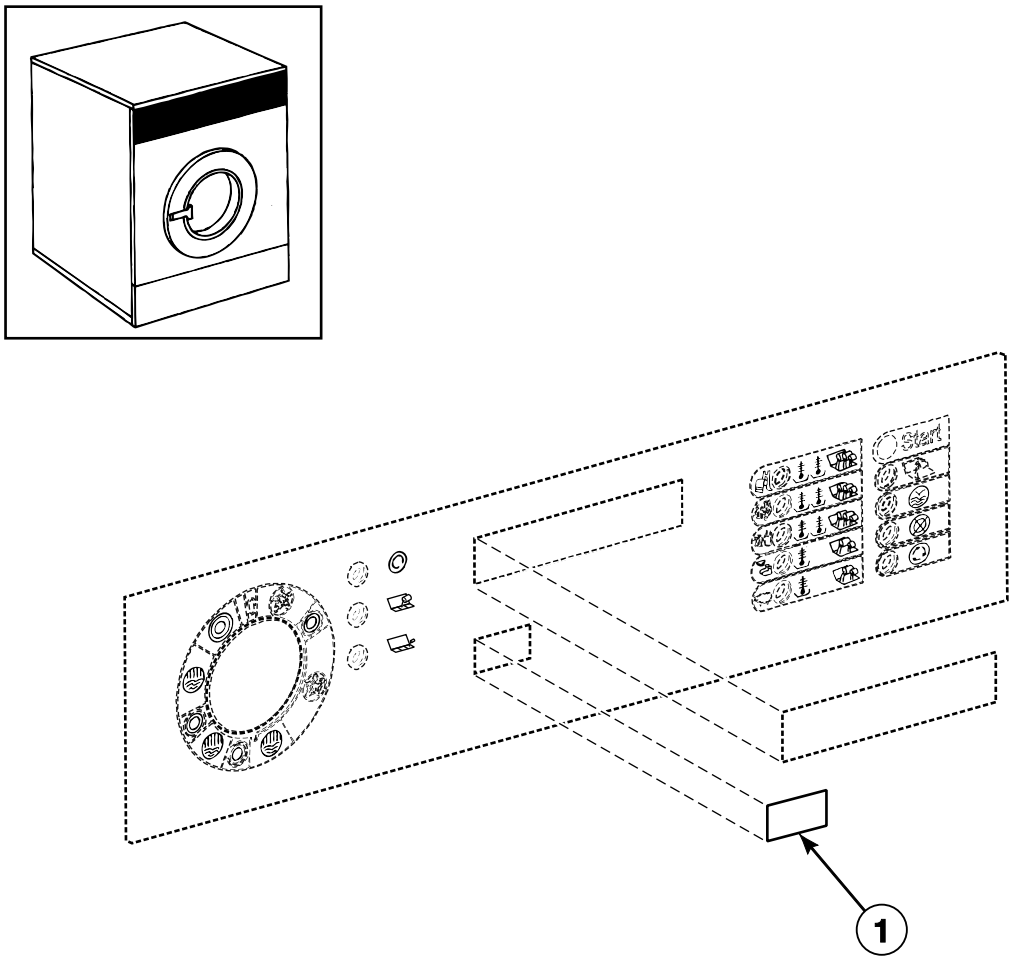

BE000400PA_D0244

© Copyright, Alliance Laundry Systems LLC – DO NOT COPY or TRANSMIT

Mechanical Timer Control Panel Decal (Drawing 2 of 2)

REF	PART NO.	DESCRIPTION	COMMENTS
1	225/00066/00	Label	
	225/10009/00	Label	
	225/00068/00	Label	
	225/10010/00	Label	
	225/00069/00	Label	
	225/10011/00	Label	
	225/00070/00	Label	
	225/00084/00	Label	
	225/00085/00	Label	
	225/00071/00	Label	
	225/00086/00	Label	
	225/10012/00	Label	
	225/00072/00	Label	
	225/00073/00	Label	
	225/10013/00	Label	
	225/10024/00	Label	
	225/10026/00	Label	
	225/10014/00	Label	
	225/10025/00	Label	
	225/10017/00	Label	
	225/10018/00	Label	
	225/10019/00	Label	
	225/10094/00	Label	
	225/10020/00	Label	
	225/10021/00	Label	
	225/10022/00	Label	
	225/10028/00	Label	
	225/10005/00	Label	
	225/10006/00	Label	
	225/10007/00	Label	

© Copyright, Alliance Laundry Systems LLC – DO NOT COPY or TRANSMIT

Electric and Steam Heating

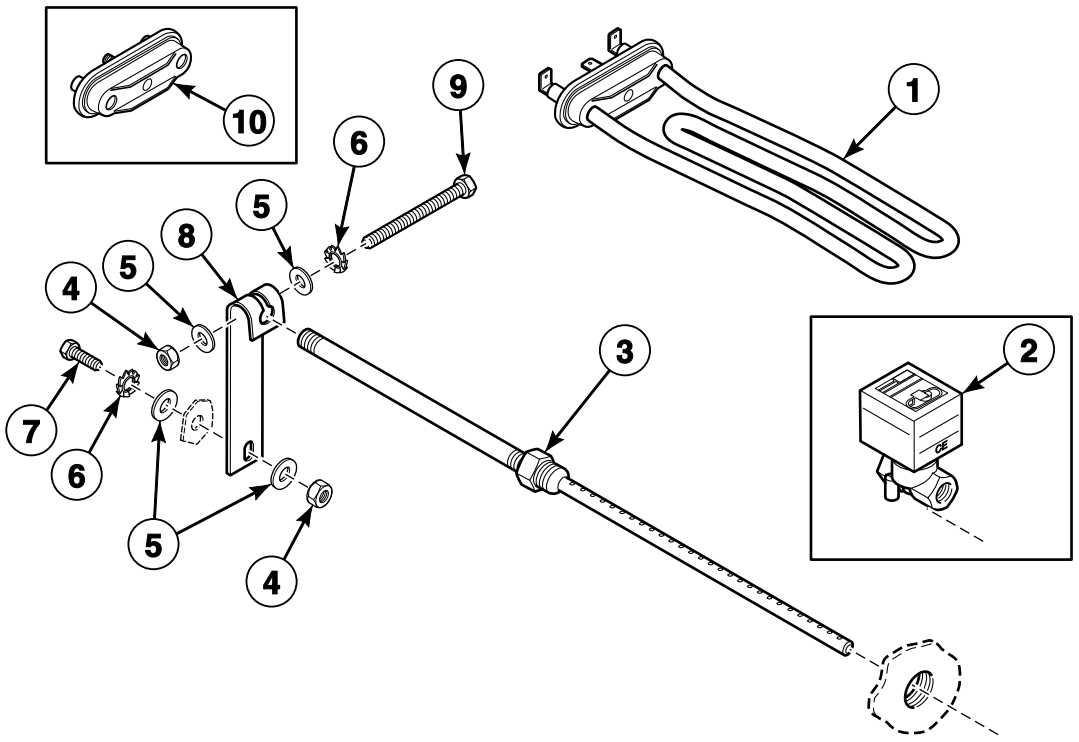

BE000391P_D0244

© Copyright, Alliance Laundry Systems LLC – DO NOT COPY or TRANSMIT

Electric and Steam Heating

REF	PART NO.	DESCRIPTION	COMMENTS
1	209/00563/30	Heating Element	2000W; 220/240 Volt
	209/00049/00	Heating Element	3000W; 220/240 Volt
	209/00581/00	Heating Element	4000W; 380 Volt
2	209/00189/00	Steam Valve	
3	119/00087/00	Steam Injector	
4	204/00004/00	Nut	
5	202/00002/00	Washer	
6	203/00003/00	Washer	
7	206/00009/00	Bolt	
8	131/00008/00	Mounting Plate	
9	206/00035/00	Bolt	
10	F360202	Heating Element Plug	

© Copyright, Alliance Laundry Systems LLC – DO NOT COPY or TRANSMIT

Soap Pump - Knight

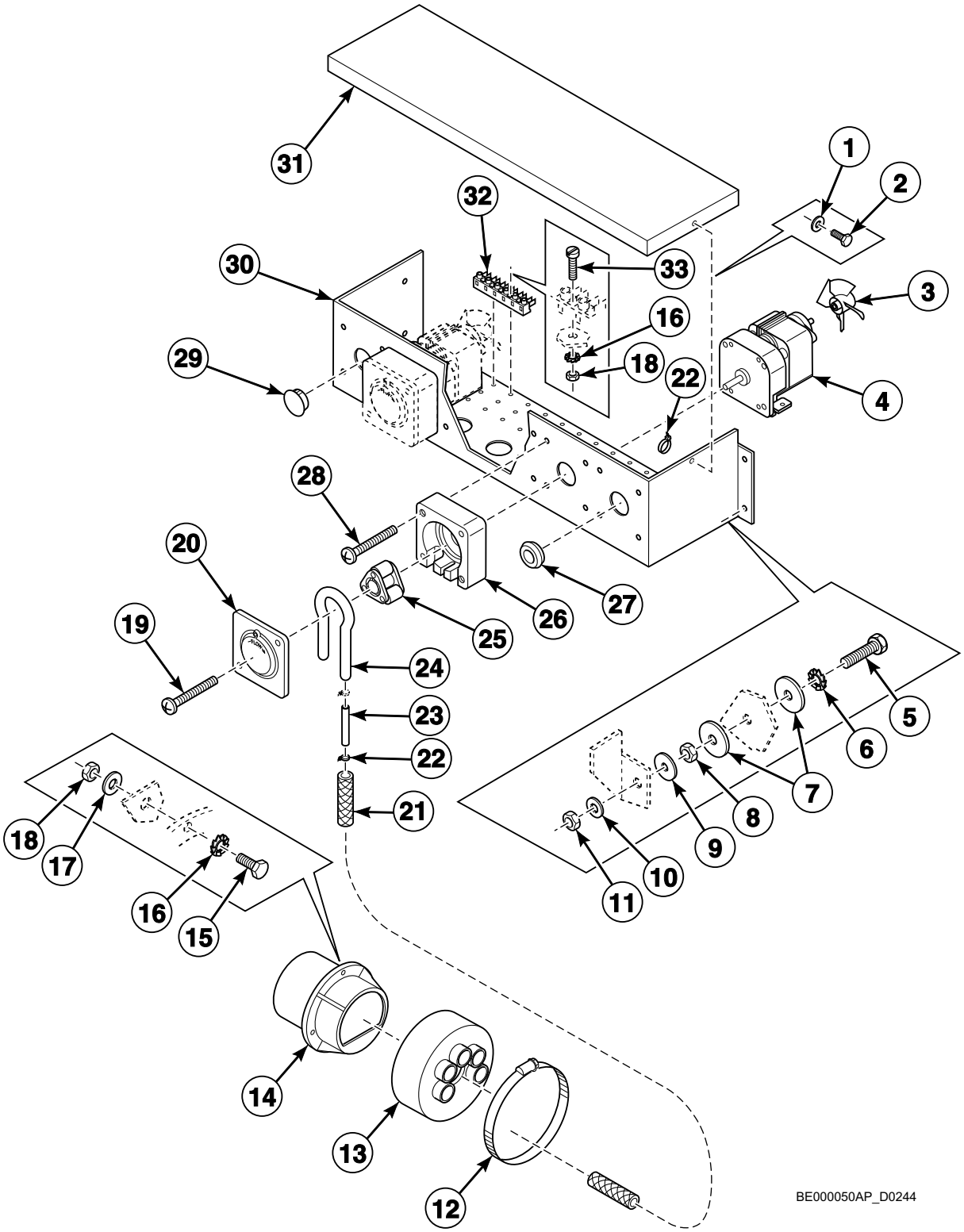

© Copyright, Alliance Laundry Systems LLC – DO NOT COPY or TRANSMIT

Soap Pump - Knight

REF	PART NO.	DESCRIPTION	COMMENTS
1	202/00109/00	Washer	
2	205/00113/00	Bolt	
3	209/00413/08	Motor	
4	209/00413/06	Fan Motor	
5	205/00103/00	Bolt	
6	203/00004/00	Washer	
7	202/00108/00	Washer	
8	204/00005/00	Nut	
9	202/00106/00	Washer	
10	202/00101/00	Washer	
11	204/00009/00	Nut	
12	223/00014/00	Hose Clamp	
13	223/00160/00	Liquid Soap Hose	
14	223/00102/07	Hose Vent	
15	206/00027/00	Bolt	
16	203/00006/00	Washer	
17	202/00004/00	Washer	
18	204/00007/00	Nut	
19	209/00413/05	Screw	
20	209/00413/09	Cover Plate	
21	223/00179/00	Soap Injector Hose	
22	211/00088/00	Cable Tie	
23	223/00180/01	Hose	
24	209/00413/03	Hose	
25	209/00413/07	Pressure Roller	
26	209/00413/10	Pump Housing	
27	223/00198/00	Grommet	
28	209/00413/04	Screw	
29	211/00087/00	Plug	
30	111/00190/00	Pump Assembly Plate	
31	111/00190/01	Pump Top Plate	
32	210/10007/00	Connection	
33	207/00003/00	Screw	

© Copyright, Alliance Laundry Systems LLC – DO NOT COPY or TRANSMIT

Soap Pump - Brightwell

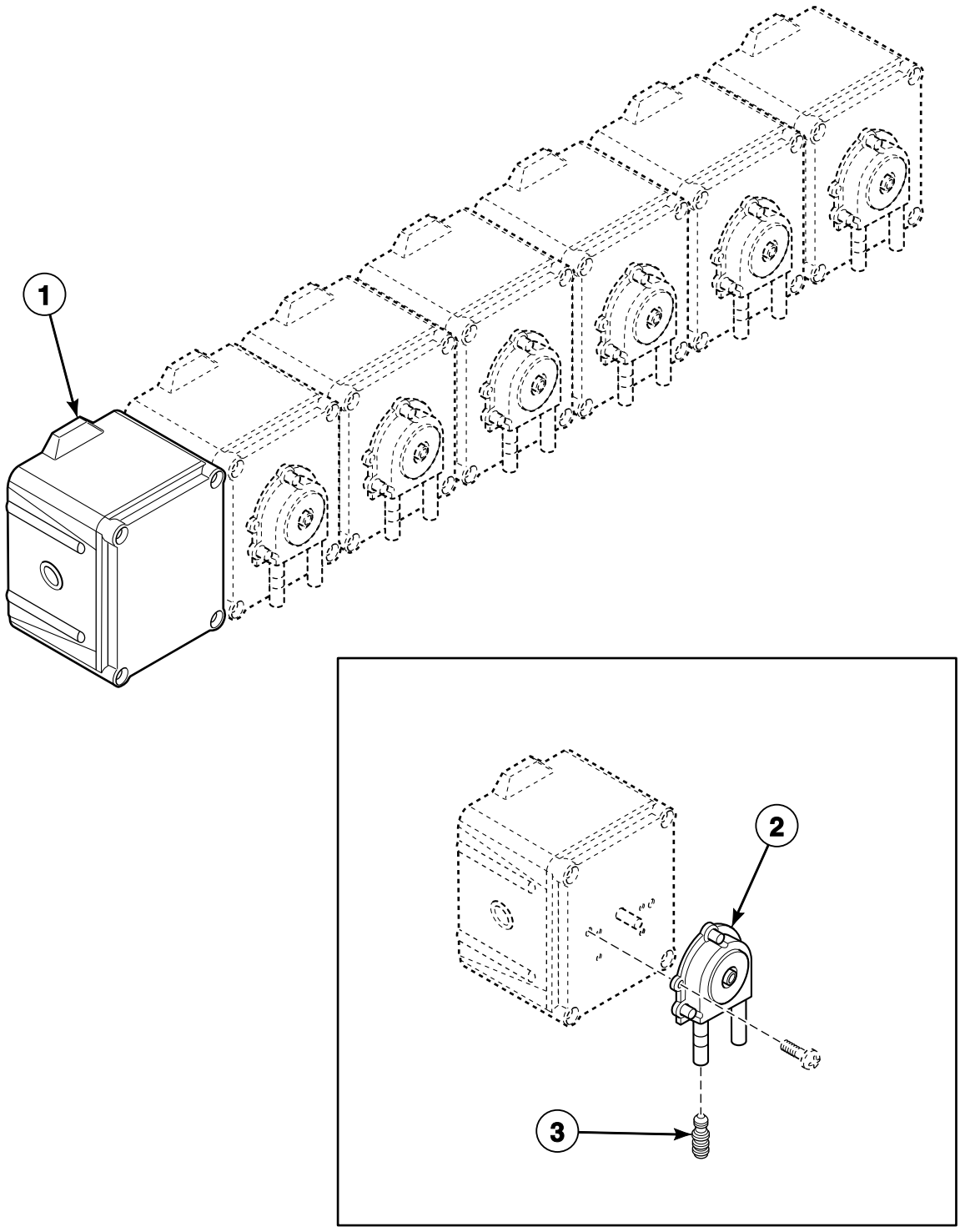

BE000527P_D0244

© Copyright, Alliance Laundry Systems LLC – DO NOT COPY or TRANSMIT

Soap Pump - Brightwell

REF	PART NO.	DESCRIPTION	COMMENTS
1	209/00554/01	Soap Pump Assembly	
	209/00554/02	Soap Pump Assembly	
	209/00554/03	Soap Pump Assembly	
	209/00554/04	Soap Pump Assembly	
	209/00554/05	Soap Pump Assembly	
	209/00554/06	Soap Pump Assembly	
2	209/00554/98	Hose	
3	209/00554/99	Hose Connector	

© Copyright, Alliance Laundry Systems LLC – DO NOT COPY or TRANSMIT

Notes

© Copyright, Alliance Laundry Systems LLC – DO NOT COPY or TRANSMIT

Parts Index

A

Anti-Splash Plate
123/00107/00 81

Assembly Plate Support
111/00198/01 73

B

Backbridge
111/01158/30 ..... 73, 75

Ball Bearing
212/00004/00 11
212/00024/00 11

Base
237/00001/50 9
240/00001/50 9

Basket
B12380901 ..... 13, 15
B12381001 ..... 13, 15

Basket Kit
B12543201 ..... 13, 15

Bearing Housing Assembly
212/10104/00 11

Bearing Replacement Kit
KBRGWE234 11

Bearing Replacement Tool Kit
382P3 11

Belt
141/00005/00 17
226/00028/00 ..... 15, 17, 19

Belt Tightening Piece
137/00002/00 17
137/00002/02 19

Bolt
205/00102/00 11
205/00103/00 ..... 69, 99
205/00104/00 ..... 29, 33
205/00105/00 69
205/00106/00 ..... 49, 51, 69
205/00113/00 ..... 71, 99
205/00115/00 11
206/00003/00 ..... 9, 21
206/00004/00 15
206/00006/00 ..... 17, 19, 21
206/00009/00 97
206/00011/00 13
206/00013/00 25
206/00014/00 ..... 17, 19, 21
206/00016/00 67
206/00027/00 ..... 69, 71, 73, 99
206/00029/00 13
206/00033/00 61
206/00034/00 13
206/00035/00 97
206/00045/00 11
206/00052/00 13
206/00099/00 ..... 53, 55, 57, 59, 67, 69, 73, 75
206/00127/00 21
206/00130/00 15
206/00136/00 75
207/00131/00 67

Button
209/00099/09 ..... 45, 47

C

Cable Tie
211/00088/00 99

Circuit Board Cover
229/00262/00 ..... 39, 41, 43

Clamp
223/00009/00 79

Coil
209/00051/21 27
209/00052/21 27
209/00203/21 27

Coin Box
137/00003/00 9
211/00071/00 61
211/00101/00 61

Coin Box Key
211/00065/02 61

Coin Box Lock
211/00065/00 61

Coin Box Ring
111/00066/00 61

Coin Box Ring Assembly
111/00100/00 61

Coin Display
209/00217/00 51

Coin Drop
209/00060/00 65

Coin Drop Microswitch
209/00060/12 61

Coin Meter
209/00061/00 65
209/00062/00 65
209/00064/00 63
209/00065/00 63
209/00066/00 65
209/00068/00 65
209/00069/00 65
209/00070/00 65
209/00072/00 65
209/00111/00 63
209/00111/10 63
209/00119/00 63
209/00120/00 63
209/00121/00 65
209/00122/00 65
209/00123/00 65
209/00156/00 65
209/00158/00 65
209/00160/00 65
209/00161/00 65
209/00162/00 65
209/00166/00 63
209/00214/00 63
209/00215/00 63
209/00215/01 63
209/00216/00 65
209/00229/00 63

N/A items do not appear in index.

© Copyright, Alliance Laundry Systems LLC – DO NOT COPY or TRANSMIT

209/00269/00 65
209/00278/00 65
209/00286/00 65
209/00296/00 65
209/00364/00 63
209/00373/00 65
209/00375/00 63
209/00378/00 63
209/00383/00 63
209/00387/00 63
209/00388/00 63
209/00389/00 63
209/00390/00 63
209/00391/00 63
209/00402/01 63
209/00402/02 63
209/00402/03 63
209/00402/04 63
209/00402/07 63
209/00402/08 63
209/00403/00 63
209/00404/00 63
209/00407/00 63
209/00411/00 65
209/00414/00 63
209/00415/00 63
209/00418/00 63
209/00428/00 63
209/00437/00 63
209/00442/00 63
209/00460/00 63
209/00469/00 65
209/00500/00 63
209/00501/00 63
209/00502/00 63
209/00522/00 65
209/00548/00 65
209/00553/00 65
209/00576/00 63
209/10215/00 63

Coin Meter Frame
225/00020/00 51

Connection
210/10007/00 99

Contact
209/00099/05 ..... 45, 47

Contact Switch
209/00099/06 ..... 39, 41, 71
209/00099/26 ..... 43, 45, 47

Contactor
209/00041/04 ..... 53, 55, 57, 59
209/00148/02 ..... 53, 55, 57, 59

Control Board
209/00547/00 41

Control Panel
111/00331/30 ..... 39, 41, 49, 51

Cooling Fan
209/00287/00 ..... 21, 75

Cordlock
211/00117/00 21
211/00123/00 73
211/00138/00 73

Counter Ring
219/00004/00 15

Cover Plate
111/00175/01 59
209/00413/09 99

D

Decal
225/00403/00 41

Dispenser Drain Funnel
223/00196/00 81

Dispenser Front Mounting Plate
111/10101/00 69

Dispenser Rear Mounting Plate
111/10102/00 69

Display
223/10066/00 51

Door
118/00125/00 ..... 29, 33

Door Axle Roller
217/00013/05 ..... 35, 37

Door Circlip
217/00013/11 ..... 35, 37

Door Glass
B12449801 ..... 29, 33

Door Glass Seal
223/00068/00 ..... 29, 33

Door Handle
217/00013/12 ..... 35, 37
217/00051/00 ..... 33, 35, 37
217/00055/00 29

Door Handle Assembly Plate
217/00013/16 35

Door Handle Catch
217/00051/13 37

Door Handle Hook
217/00013/13 35

Door Handle Latch
217/00013/04 35
217/00051/14 ..... 35, 37

Door Handle Locking Pin
217/00013/15 35

Door Handle Spring
217/00013/14 ..... 35, 37

Door Handle Stop
217/00016/00 ..... 29, 33

Door Hinge
217/00009/01 29

Door Hinge Assembly
217/00009/02 29

Door Hinge Block
253/00022/00 33

Door Hinge Plate Assembly
118/00121/00 33

Door Hinge Spacer
117/00010/00 29
118/00124/00 33

Door Lock Assembly
B12517701 31
217/00017/00 29

Door Lock Board
209/00275/04 ..... 31, 49, 51
209/00275/05 ..... 49, 51

Door Lock Microswitch
209/00272/00 31

Door Lock Pin Kit
211/00109/02 33
217/00052/02 31

N/A items do not appear in index.

© Copyright, Alliance Laundry Systems LLC – DO NOT COPY or TRANSMIT

Door Lock Solenoid
209/00274/00 31
Door Lock Spacer
217/00052/03 31
Door Lock Spring
217/00013/03 ..... 35, 37
224/00049/00 31
Door Locking Grip
217/00013/07 ..... 35, 37
Door Locking Pin
217/00013/08 ..... 35, 37
217/00051/15 37
Door Mounting Pin
217/00013/09 ..... 35, 37
Door Release Wire
217/00052/07 31
Door Roller
217/00013/06 ..... 35, 37
Door Switch
209/00023/00 29
Drain Hose
223/00183/00 25
Drain Pipe
223/00106/00 25
Drain Valve
209/00399/00 25
Drain Valve Motor
209/00051/11 27
209/00052/11 27
209/00203/11 27
Drain Valve Motor Mounting Plate
209/00025/07 27
Drain Valve Shaft
209/00170/10 27
Drain Valve Shaft Seal
209/00025/10 27
Drain Valve Spring
209/00025/13 27

E

Elbow
223/00015/00 ..... 53, 57
223/00210/00 59
Electrical Component Assembly
111/00256/00 59
Electrical Component Extension Plate
140/00021/00 ..... 53, 57
Electrical Connection Plate
111/00094/10 71
111/00188/04 71
Electrical Connection Sticker
229/00068/02 71
Emergency Stop Button Kit
209/00253/00 ..... 39, 41, 45, 47, 71
Eprom
209/00266/01 39
Exterior Box
223/00102/40 ..... 79, 81

F

Facia Panel
225/00280/ABL 49
225/00298/AOL 39, 41
225/00306/AOL 39, 41
225/00319/ABL 51
Fan Grill
209/00287/01 75
Fan Motor
209/00413/06 99
Fastener
225/10023/00 ..... 49, 51
Filter
252/00032/00 59
Front Label
225/00361/00 41
225/00367/00 41
225/10032/00 ..... 85, 93
225/10033/00 ..... 85, 93
225/10038/00 ..... 85, 93
225/10042/00 ..... 85, 93
225/10043/00 ..... 85, 93
225/10044/00 ..... 85, 93
225/10045/00 ..... 85, 93
225/10049/00 87
225/10050/00 87
225/10051/00 87
225/10052/00 87
225/10053/00 87
225/10055/00 87
225/10056/00 87
225/10063/00 ..... 85, 93
225/10064/00 ..... 85, 93
225/10065/00 ..... 85, 93
225/10067/00 89
225/10068/00 89
225/10069/00 89
225/10071/00 ..... 85, 93
225/10072/00 ..... 85, 93
225/10073/00 89
225/10074/00 89
225/10075/00 89
225/10080/00 89
225/10081/00 89
225/10082/00 89
225/10083/00 89
225/10087/00 89
225/10089/00 ..... 85, 93
225/10090/00 89
225/10093/00 89
225/10097/00 89
225/10098/00 89
225/10100/00 ..... 85, 93
225/10101/00 ..... 85, 93
225/10102/00 87
225/10103/00 87
225/10104/00 87
225/10105/00 87
225/10106/00 87
225/10107/00 87
225/10108/00 89
225/10109/00 87
225/10110/00 87
225/10111/00 87
225/10112/00 87
225/10113/00 87

N/A items do not appear in index.

© Copyright, Alliance Laundry Systems LLC – DO NOT COPY or TRANSMIT

225/10114/00 87
225/10115/00 87
225/10116/00 89
225/10121/00 89
225/10123/00 89
225/10124/00 87
225/10125/00 87
225/10126/00 87
225/10127/00 87
225/10128/00 87
225/10129/00 ..... 85, 93
225/10131/00 89
225/10132/00 ..... 85, 93
225/10134/00 89
225/10135/00 89
225/10136/00 89
225/10137/00 89
225/10138/00 89
225/10145/00 89
225/10146/00 91
225/10147/00 91
225/10148/00 91
225/10149/00 91
225/10150/00 91
225/10151/00 91
225/10152/00 89
225/10153/00 ..... 85, 93
225/10154/00 91
225/10155/00 91
225/10156/00 91
225/10157/00 87
225/10158/00 ..... 85, 93
225/10159/00 87
225/10160/00 89
225/10161/00 87
225/10162/00 87
225/10164/00 87
225/10168/00 ..... 85, 93
225/10169/00 91
225/10170/00 91
225/10171/00 91
225/10172/00 91
225/10173/00 91
225/10174/00 91
225/10175/00 91
225/10176/00 ..... 85, 93
225/10177/00 ..... 85, 93
225/10178/00 89
225/10179/00 89
225/10180/00 91
225/10181/00 91
225/10182/00 89
225/10183/00 89
225/10184/00 89
225/10185/00 89
225/10193/00 ..... 85, 93
225/10194/00 87
225/10195/00 87
225/10196/00 91
225/10198/00 89
225/10199/00 87
225/10200/00 87
225/10201/00 87
225/10202/00 87
225/10203/00 87
225/10204/00 87
225/10205/00 91
225/10206/00 91
225/10207/00 91
225/10208/00 91
225/10209/00 91
225/10210/00 ..... 85, 93
225/10219/00 91
225/10220/00 91
225/10221/00 91
225/10222/00 91
225/10223/00 91
225/10224/00 91
225/10226/00 91
225/10227/00 91
225/10228/00 ..... 85, 93
225/10229/00 ..... 85, 93
225/10230/00 89
225/10231/00 ..... 85, 93
225/10232/00 89
225/10233/00 87
225/10235/00 91
225/10236/00 91
225/10237/00 91
225/10238/00 91
225/10239/00 91
225/10240/00 91
225/10241/00 89
225/10242/00 89
225/10243/00 ..... 85, 93
225/10244/00 89
225/10245/00 89
225/10246/00 87
225/10247/00 91
225/10248/00 ..... 85, 93
225/10249/00 ..... 85, 93
225/10250/00 91
225/10251/00 91
229/00257/00 87
325/00239/00 ..... 85, 93
325/10087/00 ..... 85, 93
325/10091/00 ..... 85, 93
325/10095/00 ..... 85, 93
325/10102/00 ..... 85, 93

Front Panel
111/00217/01 49
111/00217/02 51
111/00218/00 ..... 45, 47
140/00006/01 67
140/00006/02 67
140/03006/01 67
225/00274/00 43
225/00304/00 83

Front Plate
111/00068/00 61

Fuse
209/00372/01 43
209/00439/00 ..... 39, 41
209/00468/00 71

Fuse Holder
209/00202/00 71

G

Gasket
246/00092/00 59

Grommet
223/00174/00 ..... 59, 75
223/00198/00 ..... 53, 55, 59, 71, 99
223/00203/00 59

N/A items do not appear in index.

© Copyright, Alliance Laundry Systems LLC – DO NOT COPY or TRANSMIT

Ground Terminal
209/00006/01 71
210/10015/00 31

H

Heating Element
209/00049/00 97
209/00563/30 97
209/00581/00 97
Heating Element Plug
F360202 97
Hinge
131/00046/00 33
Holder
217/00019/00 29
Hook
111/00001/00 67
111/00002/00 67
Hose
209/00413/03 99
209/00554/98 101
223/00007/00 77
223/00115/00 79
223/00180/01 99
223/00188/00 79
Hose Barb
223/00016/00 ..... 53, 55, 57, 59
Hose Clamp
223/00010/00 ..... 73, 77, 81
223/00011/00 ..... 53, 55, 57, 59, 73, 81
223/00013/00 ..... 25, 77, 79
223/00014/00 ..... 73, 79, 81, 99
223/00023/00 ..... 25, 79
223/00071/00 81
Hose Connector
209/00554/99 101
Hose Vent
223/00102/07 ..... 73, 79, 99
Housing
209/00399/01 27

I

Infrared Cable
210/00902/00 ..... 41, 43, 45
Injector
223/00001/05 77
Inlet Valve, 2-Way
209/00316/00 73
209/00419/00 73
Inner Coin Box
211/00070/03 61
Insulating Sticker
229/00255/00 ..... 39, 41, 43
Insulation Plate
217/00038/00 29
Interlock Coil Spring
224/00043/00 31
Interlock Lever
217/00052/04 31
Interlock Pin
224/00003/00 29
Intermediate Fan Motor Plate
111/00243/00 21
Inverter Box Cover
111/01158/11 75
Inverter Drive
F8421311 ..... 23, 75
F8421312 ..... 23, 75
Inverter Drive Box
111/01149/00 75
Inverter Drive Kit
F8421211 ..... 23, 75
F8421212 ..... 23, 75

K

Key
212/00026/00 15
Keyboard
209/00323/01 47
Keypad
209/00552/01 43
Keypad Controller
209/00505/01 45

L

Label
225/00066/00 95
225/00068/00 95
225/00069/00 95
225/00070/00 95
225/00071/00 95
225/00072/00 95
225/00073/00 95
225/00084/00 95
225/00085/00 95
225/00086/00 95
225/00250/00 83
225/00310/00 83
225/00311/00 83
225/00325/00 83
225/00335/00 83
225/00339/00 83
225/00342/00 83
225/00343/00 83
225/00344/00 83
225/00345/00 83
225/00349/00 83
225/00351/00 83
225/00352/00 83
225/00363/00 83
225/00364/00 83
225/00366/00 83
225/00371/00 83
225/00374/00 83
225/00382/00 83
225/00385/00 83
225/10005/00 95
225/10006/00 95
225/10007/00 95
225/10009/00 95
225/10010/00 95

N/A items do not appear in index.

© Copyright, Alliance Laundry Systems LLC – DO NOT COPY or TRANSMIT

225/10011/00 95
225/10012/00 95
225/10013/00 95
225/10014/00 95
225/10017/00 95
225/10018/00 95
225/10019/00 95
225/10020/00 95
225/10021/00 95
225/10022/00 95
225/10024/00 95
225/10025/00 95
225/10026/00 95
225/10028/00 95
225/10094/00 95
229/00245/00 47
325/00323/00 83
325/00324/00 83

Lamp
209/00151/00 ..... 49, 51

Lens Cover
209/00152/00 ..... 49, 51
209/00154/00 ..... 49, 51

Level Switch Elbow
223/00015/00 55

Lever Spring
224/00040/00 31

Lid Seal
223/00003/00 77

Liquid Soap Dispenser Insert
223/00102/08 ..... 79, 81

Liquid Soap Hose
223/00160/00 ..... 73, 79, 99

Lock
209/00279/00 ..... 53, 55, 59

Lock Shaft
217/00017/03 31

Lower Panel
140/00008/00 69
140/03008/00 69

Lug Holder
209/00452/02 ..... 53, 55, 57, 59

M

Main Board
B12351701 43

Metal Disc
202/00120/00 ..... 41, 43, 45

Microswitch
B12625101 31

Motor
B12510701 21
209/00413/08 99
241/00001/00 ..... 17, 19
241/00002/00 17
241/00003/00 17
241/00004/00 17
241/00006/00 17

Motor Key
227/00127/01 ..... 17, 19

Mounting Plate
111/00016/00 57
111/00063/00 69
111/00124/00 55
111/00197/00 ..... 53, 55, 57
131/00008/00 97
137/00010/00 21
223/00001/06 77

Mushroom Pushbutton
209/00248/00 ..... 39, 41, 45, 47, 71
209/00248/20 43

N

Network Connection Printboard
209/00540/00 71

Noise Filter
227/00165/00 75

Nut
204/00001/00 11
204/00002/00 ..... 9, 13, 17, 19
204/00003/00 13
204/00004/00 97
204/00005/00 ..... 13, 25, 55, 61, 99
204/00006/00 ..... 49, 51, 71
204/00007/00 ..... 17, 19, 31, 49, 51, 57, 59, 71, 73, 75, 99
204/00008/00 ..... 31, 61
204/00009/00 ..... 11, 29, 39, 99
204/00012/00 21
204/00014/00 ..... 17, 19
204/00103/00 ..... 29, 33
204/00105/00 79
204/00106/00 ..... 29, 33, 67, 69
204/00107/00 ..... 67, 69
204/00111/00 21
204/00112/00 11
204/00113/00 21
204/00114/00 ..... 41, 45, 47, 49, 51, 69, 75
204/00115/00 21
204/00116/00 ..... 39, 43, 45, 47, 59
204/00201/00 ..... 73, 77
206/00101/00 ..... 53, 57, 69, 73
206/00105/00 59
208/00002/00 69
208/00104/00 67
211/00065/01 61

O

O-Ring
217/00002/00 11
217/00021/00 ..... 29, 31, 33

Outer Cabinet Lock
211/00070/01 61

Outer Coin Box
211/00100/00 61

Outer Tub
119/00228/00 13
138/00003/00 13
138/00006/00 13
138/00008/00 13
138/00009/00 13
138/00010/00 13

Outlet Pipe Plate Assembly
101/00007/00 25

N/A items do not appear in index.

© Copyright, Alliance Laundry Systems LLC – DO NOT COPY or TRANSMIT

Overflow Hose
223/00100/00 25
Overlay
225/00365/00 ..... 43, 45

P

Parameter Unit Assembly
F8410901 75
227/00171/00 75
Pin
208/00004/00 29
211/00105/00 29
Plexi Frame
225/00316/00 ..... 39, 41
Plug
211/00087/00 99
Pressure Hose
223/00082/00 ..... 53, 55, 57
223/00179/10 53
Pressure Roller
209/00413/07 99
Pressure Switch
209/00007/30 57
209/00007/50 ..... 53, 55, 59
Pressure Switch Bracket
111/00424/00 57
Pressure Switch Hose
223/00212/00 59
Pressure Switch Hose Tee
223/00173/10 ..... 55, 59
Prewash and Mainwash Nozzle
223/00001/04 ..... 73, 77
Print Display
209/00281/00 51
Printboard
209/00218/03 71
209/00323/02 59
209/00440/00 39
209/00440/02 39
209/00440/70 39
209/00452/01 ..... 55, 57, 59
209/00505/02 59
209/00542/02 59
Printboard Separator
211/00125/00 ..... 49, 51
Program Indicator
225/00001/00 57
225/00078/00 ..... 49, 51
Program Switch Separator
211/10156/00 ..... 49, 51
Programming Key Contact Switch
209/00326/20 43
Programming Switch
209/00326/00 ..... 45, 47
Protection Block
217/00017/02 29
Protector
209/00264/00 ..... 53, 55, 57, 59
209/00265/00 ..... 53, 55, 57, 59
Pulley
226/00072/00 ..... 17, 19
226/00073/00 ..... 17, 19
226/00092/00 21
239/00013/00 15
Pump Assembly Plate
111/00190/00 99
Pump Housing
209/00413/10 99
Pump Top Plate
111/00190/01 99
Pushbutton
209/00396/00 61

R

Rear Panel
140/00009/00 67
Retainer Ring
212/00006/00 11
212/00037/00 11
Retaining Ring
117/00042/00 ..... 21, 49, 51, 69
Reversing Timer
209/00012/00 57
209/00013/00 57
Rinse Insert
223/00102/03 ..... 79, 81
Rivet
208/00017/00 71
Rod
197/00011/00 21
Roll Pin
208/00013/00 61

S

Safety Ring
226/00054/00 ..... 17, 19, 21
Screw
B12347501 ..... 77, 79, 81
B12500801 ..... 29, 33
205/00101/00 11
206/00021/00 57
206/00038/00 61
206/00053/00 15
206/00056/00 21
207/00002/00 21
207/00003/00 99
207/00004/00 75
207/00008/00 ..... 17, 19, 57, 59
207/00009/00 ..... 31, 61
207/00031/00 ..... 71, 75
207/00032/00 ..... 49, 51
207/00101/00 69
207/00102/00 ..... 29, 31
207/00106/00 79
207/00108/00 61
207/00109/00 29
207/00112/00 ..... 29, 31
207/00126/00 33
207/00135/00 ..... 31, 59
208/00001/00 69
208/00007/00 ..... 57, 61
208/00024/00 ..... 49, 51
209/00025/08 27

N/A items do not appear in index.

© Copyright, Alliance Laundry Systems LLC – DO NOT COPY or TRANSMIT

209/00170/05 27
209/00413/04 99
209/00413/05 99

Seal Cover
219/00001/00 11

Seal Plate Assembly
B12333701 11

Selector Switch
209/00175/00 ..... 49, 51
209/00176/00 49

Separator
206/00141/00 59

Separator Plate
223/00001/03 77

Shaft Seal
219/00003/00 11

Side Panel
140/00007/00 ..... 67, 69
140/03007/00 ..... 67, 69

Soap Box Assembly Plate
123/00103/06 81

Soap Dispenser
223/00001/01 77
223/00102/70 81

Soap Dispenser Cover
223/00103/01 67

Soap Dispenser Cover Hinge Rod
223/00103/04 67

Soap Dispenser Frame
223/00103/03 67

Soap Dispenser Gasket
223/00109/00 ..... 79, 81

Soap Dispenser Hose
223/00220/00 81

Soap Dispenser Rinse Siphon
223/00102/04 ..... 79, 81

Soap Injector Hose
223/00179/00 99

Soap Pump Assembly
209/00554/01 101
209/00554/02 101
209/00554/03 101
209/00554/04 101
209/00554/05 101
209/00554/06 101

Soap Spray Nozzle
223/00102/06 ..... 79, 81

Softener Spray Nozzle
223/00102/05 ..... 79, 81

Spacer
211/00162/00 21

Speed Detector
209/00400/00 11

Speed Detector Assembly Plate
152/00052/00 11

Spindle
111/00069/00 61
126/00051/00 ..... 17, 19, 21

Spring
211/00070/04 61
217/00020/00 29

Standoff
211/00120/00 ..... 31, 71
211/00122/00 ..... 39, 41, 43

Steam Injector
119/00087/00 97

Steam Valve
209/00189/00 97

Sticker
225/00308/00 ..... 39, 83
225/00309/00 ..... 39, 83
225/00341/00 83
225/00386/00 83
225/00387/00 83
225/00419/00 83
325/00321/00 83

Stopper
223/00087/00 ..... 17, 19

Switch Base
209/00099/25 43

Switch Knob
209/00099/29 43

T

Telem Sticker
209/00520/00 ..... 39, 41, 43, 45, 47, 71

Terminal
209/00043/00 ..... 17, 19

Terminal Block
209/00005/00 59
209/00058/00 71

Thermostat
209/00243/00 57
209/00266/08 59
211/00115/00 49

Thermostat Assembly
209/00309/02 ..... 53, 55

Thermostat Grommet
225/10004/00 ..... 53, 55, 59

Thermostat Seal
223/00065/00 49

Tightening Bracket
137/00009/00 19

Timer
209/00107/00 57

Top Panel
140/00045/01 67
140/00045/02 67
140/03045/01 67

Tub Clamp Ring
238/00011/00 13

Tub Front
138/00001/00 ..... 13, 29

Tub Front Gasket
223/00242/00 29

Tub Front Panel Clip
217/00008/00 13

Tub Front Panel Gasket
223/00242/40 13

Tub Ring Assembly
137/00004/00 13

N/A items do not appear in index.

© Copyright, Alliance Laundry Systems LLC – DO NOT COPY or TRANSMIT

U

U-Piece
113/00016/01 11

Upper Back Panel
111/01158/80 ..... 69, 71

Upper Front Panel
111/00184/10 ..... 39, 41
111/00221/00 ..... 39, 41
111/00221/50 43
225/00272/00 ..... 45, 47

V

Vent Hose
223/00107/06 81

Ventilating Hose
223/00107/01 79

W

Washer
201/00001/00 21
201/00002/00 ..... 73, 77
201/00004/00 ..... 17, 19, 21
201/00005/00 13
201/00006/00 ..... 25, 57
201/00007/00 ..... 11, 55, 67
201/00008/00 ..... 39, 41, 43, 45, 47, 49, 51
201/00009/00 13
201/00010/00 ..... 11, 17, 19, 21
201/00011/00 15
201/00012/00 11
201/00017/00 31
201/00018/00 31
201/00201/00 11
202/00002/00 97
202/00003/00 ..... 13, 29, 49, 51
202/00004/00 ..... 69, 71, 73, 75, 99
202/00101/00 ..... 29, 33, 99
202/00104/00 33
202/00106/00 99
202/00108/00 99
202/00109/00 99
202/00110/00 69
202/00111/00 33
203/00001/00 ..... 9, 13, 15
203/00002/00 ..... 13, 17, 19, 21
203/00003/00 97
203/00004/00 ..... 13, 25, 61, 69, 99
203/00005/00 ..... 49, 51, 67, 69
203/00006/00 ..... 17, 19, 31, 49, 51, 57, 59, 71, 73, 75, 99
203/00007/00 ..... 31, 59, 61
203/00008/00 ..... 33, 79
203/00010/00 31
208/00009/00 69
209/00025/12 27
211/00070/02 61
217/00052/08 31
223/00001/07 77
223/00051/10 ..... 43, 45, 47
223/00065/01 49
223/00123/00 ..... 43, 45, 47, 59

Water Hose
223/00044/00 ..... 73, 77, 81
223/00059/00 ..... 73, 79, 81

N/A items do not appear in index.

© Copyright, Alliance Laundry Systems LLC – DO NOT COPY or TRANSMIT

Notes

© Copyright, Alliance Laundry Systems LLC – DO NOT COPY or TRANSMIT