Washer-Extractor

Cabinet Hardmount

2 Speed Models with P, S or V Computers

Refer to Page 5 for Model Numbers

Parts

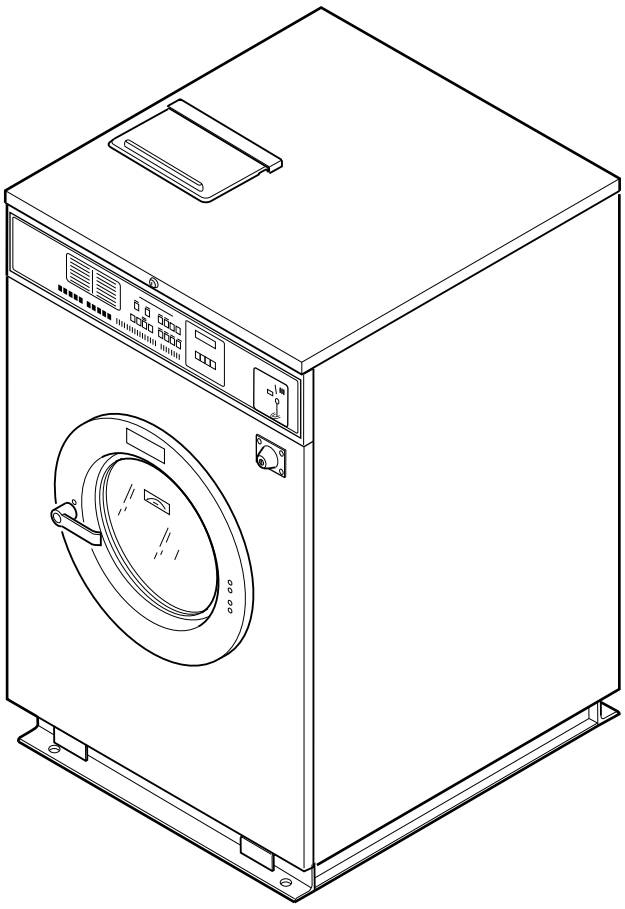

CHM1757C_F232190

Alliance™ Laundry Systems

www.alliancelaundry.com

Part No. F232190R25
June 2024

Table of Contents

Title	Page
Parts Ordering Information	3
Serial Plate Location	3
Model Identification	5
Product Overview for A and B-Control	6
Product Overview for NetMaster, Mechanical Timer and P, S and V-Computer	8
Decals	10
Control Panel Decals and Controls - PN, SN and VN Models	12
Control Panel Decals and Controls - VC and VX Models	14
Control Module - PN and SN Models	16
Control Module - VC, VN and VX Models Through 8/1/04	18
Control Module - VC, VN and VX Models Starting 8/2/04	20
Contactors	22
Optional Coin Box	24
W2000 Coin Meter Assembly - VC and VX Models; Single Drop	26
W2000 Coin Meter Assembly - VC and VX Models; Dual Drop	28
Fill Plumbing Assembly and External Supply Assembly (Drawing 1 of 2)	30
Fill Plumbing Assembly and External Supply Assembly (Drawing 2 of 2)	32
Filter (Optional) and Supply Hose	34
Drain Valve Assembly - 20, 25 and 30 Pound Models	36
Drain Valve Assembly - 40, 50 and 60 Pound Models	38
Drain Valve Assembly, Hoses and Air Trap - 50 and 60 Pound Models with Heat Shell	40
Drain Assembly, Hoses and Air Trap - All Models Except 50 and 60 Pound Models with Heat Shell	42
Pump Drain Option - HC30, SC30 and UC30 E-Voltage Models	44
Pump Drain Option - All Models Except HC30, SC30 and UC30 E-Voltage Models	46
Door (Drawing 1 of 2)	48
Door (Drawing 2 of 2)	50
Door Lock - VC and VX Models	52
Door Lock - PN, SN and VN Models	54
Inner and Outer Front Panels - PN, SN and VN Models	56
Inner and Outer Front Panels - VC and VX Models	58
Panels (Drawing 1 of 2)	60
Panels (Drawing 2 of 2)	62
Basket, Shell and Frame (Drawing 1 of 2)	64
Basket, Shell and Frame (Drawing 2 of 2)	66
Trunnion - 20, 25 and 30 Pound Models	68
Trunnion - 40, 50 and 60 Pound Models	70
Motor, Pulley and Belt Assembly - 20, 25 and 30 Pound Models (Drawing 1 of 3)	72
Motor, Pulley and Belt Assembly - 20, 25 and 30 Pound Models (Drawing 2 of 3)	74
Motor, Pulley and Belt Assembly - 20, 25 and 30 Pound Models (Drawing 3 of 3)	76
Motor, Pulley and Belt Assembly - 40, 50 and 60 Pound Models (Drawing 1 of 2)	78
Motor, Pulley and Belt Assembly - 40, 50 and 60 Pound Models (Drawing 2 of 2)	80

© Copyright 2024, Alliance Laundry Systems LLC

All rights reserved. No part of the contents of this book may be reproduced or transmitted in any form or by any means without the expressed written consent of the publisher.

Steam Heat Assembly 82
Electric Heat Option 84
Special Tools 86
Parts Index 89

© Copyright, Alliance Laundry Systems LLC – DO NOT COPY or TRANSMIT

Parts Ordering Information

If literature or replacement parts are required, contact the source from whom the machine was purchased or contact Alliance Laundry Systems at (920) 748-3121 for the name and address of the nearest authorized parts distributor.

For technical assistance, call the number listed below:

(920) 748-3121 Ripon, Wisconsin

Serial Plate Location

When calling or writing about your product, be sure to mention model and serial numbers. Model and serial numbers are located on serial plate(s) as shown.

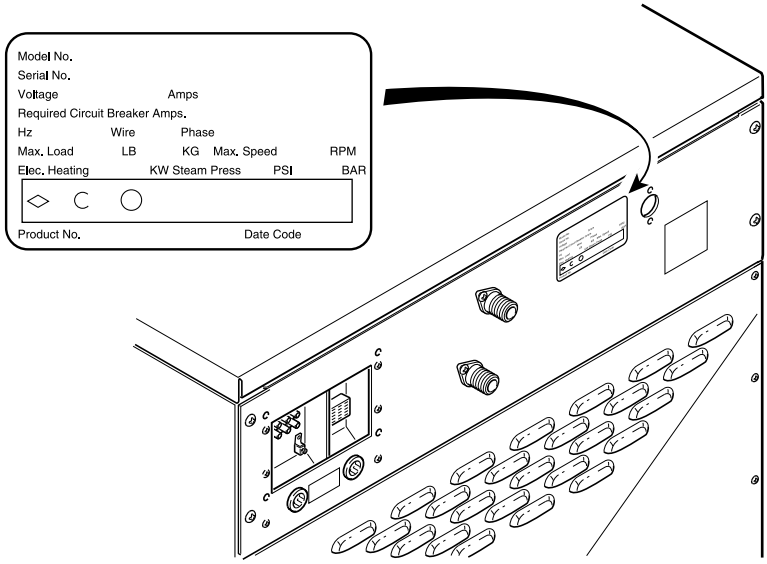

CHM2411P_F232190

© Copyright, Alliance Laundry Systems LLC – DO NOT COPY or TRANSMIT

Notes

© Copyright, Alliance Laundry Systems LLC – DO NOT COPY or TRANSMIT

Model Identification

Information in this manual is applicable to these washer-extractor models:

HC20SN2	SC20VN2	UC20PN2
HC20VC2	SC30VN2	UC20VN2
HC20VX2	SC40VN2	UC30PN2
HC25VC2	SC50VN2	UC30VN2
HC25VX2	SC60VN2	UC40PN2
HC30SN2		UC40VN2
HC30VC2		UC50PN2
HC30VX2		UC50VN2
HC40SN2		UC60PN2
HC40VC2		UC60VN2
HC40VX2		
HC50SN2		
HC50VC2		
HC50VX2		
HC60SN2		
HC60VC2		
HC60VX2		

NOTE: This manual applies to all P, S and V-computer 40-pound capacity models and to design 6 models only of every other capacity

© Copyright, Alliance Laundry Systems LLC – DO NOT COPY or TRANSMIT

Product Overview for A and B-Control

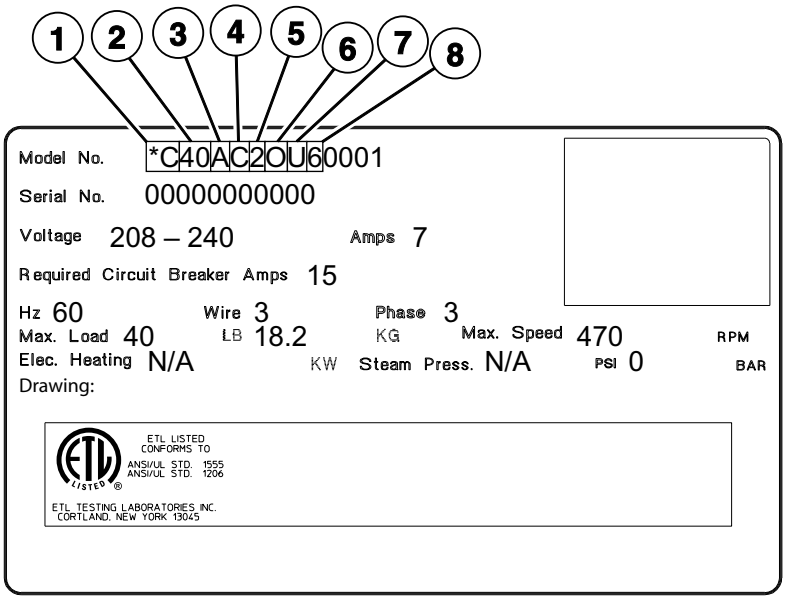

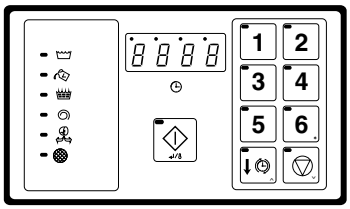

A-Control OPL

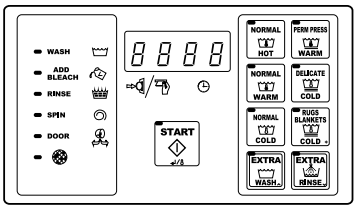

A-Control Coin (Domestic)

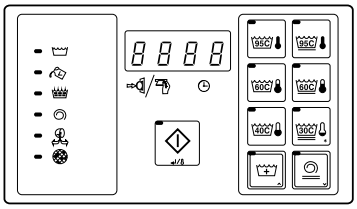

A-Control Coin (International)

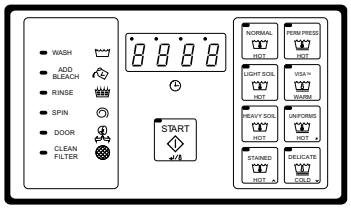

B-Control OPL (Domestic)

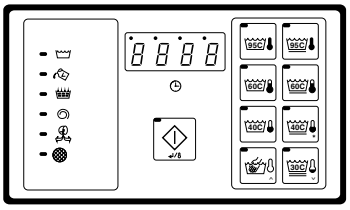

B-Control OPL (International)

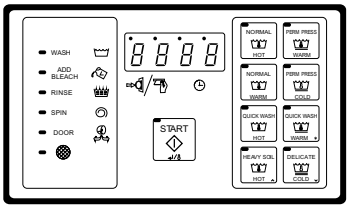

B-Control Coin (Domestic)

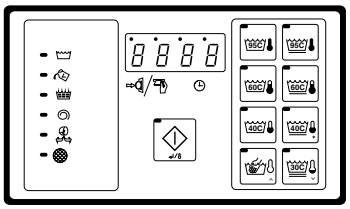

B-Control Coin (International)

CHM2976P_F232190

© Copyright, Alliance Laundry Systems LLC – DO NOT COPY or TRANSMIT

Product Overview for A and B-Control

REF	PART NO.	DESCRIPTION	COMMENTS
1	-	Product Family	DC HC NC SC UC
2	-	Capacity (Pounds)	18 20 25 27 30 35 40 50 60 80 100 125
3	-	Control	A (A-Control) B (B-Control)
4	-	Actuation	C (Drop Coin Meter) D (Digital Coin Meter) L (Prep for Remote/Central Pay) N (Non-Coin - OPL) R (Cardmate Plus II) X (Prep for Coin Meter) Y (Prep for Card Reader)
5	-	Speed	2 (2-Speed) 3 (3-Speed) F (F-Speed) V (Variable Speed)
6	-	Voltage	B (120/60/1/2) C (380-415/50/3/4) D (220-240/50/3/3) E (220-240/50/1/2) F (440-480/60/3/3) J (220/50/3/3) N (440-480/50-60/3/3) O (200-240/60/3/3) P (380-415/50-60/3/3) Q (200-240/50-60/3/3) X (200-240/50-60/1/3) Y (208-240/60/1/2)
7	-	Side Panel	N (Network Board Installed) P (Network Adaptable) U (Standard Specs) 1 (Stainless Steel) 2 (Network Board Installed with Stainless Sides) 3 (Network Adaptable with Stainless Sides)
8	-	Design	1-4 and 6

© Copyright, Alliance Laundry Systems LLC – DO NOT COPY or TRANSMIT

Product Overview for NetMaster, Mechanical Timer and P, S and V-Computer

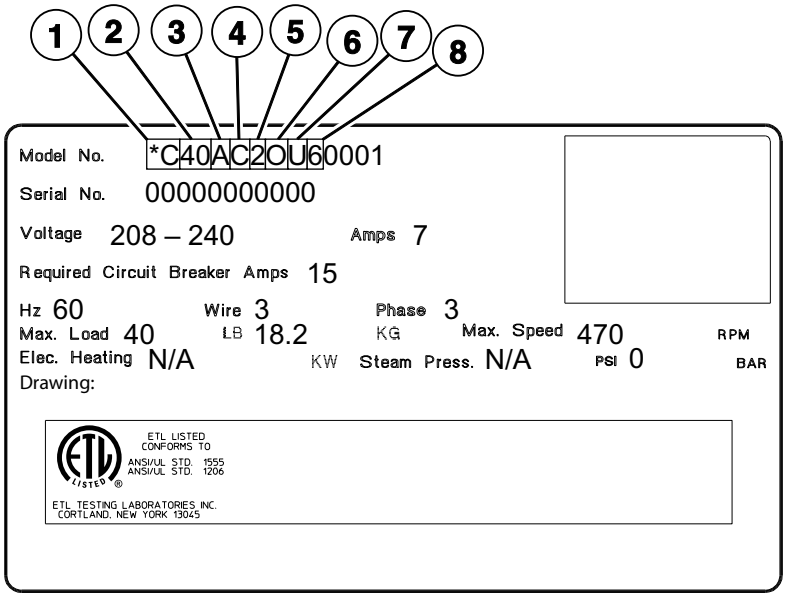

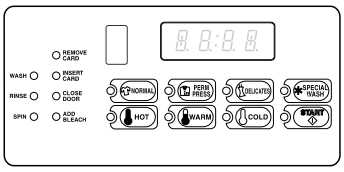

NetMaster

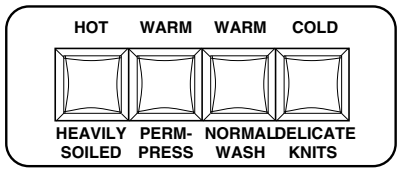

Mechanical Timer

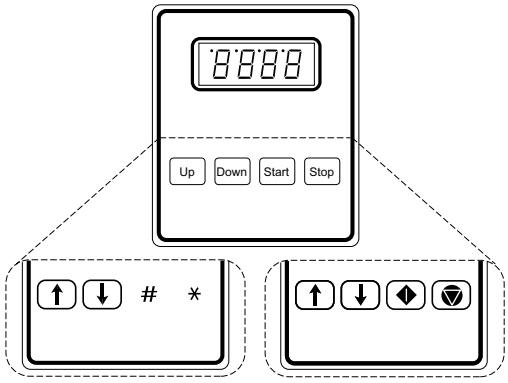

P, S and V-Computer

CHM2977P_F232190

© Copyright, Alliance Laundry Systems LLC – DO NOT COPY or TRANSMIT

Product Overview for NetMaster, Mechanical Timer and P, S and V-Computer

REF	PART NO.	DESCRIPTION	COMMENTS
1	-	Product Family	DC HC NC SC UC
2	-	Capacity (Pounds)	18 20 25 27 30 35 40 50 60 80 100 125
3	-	Control	M (Mechanical Timer) N (NetMaster) P (P-Computer) S (S-Computer) V (V-Computer)
4	-	Actuation	C (Drop Coin Meter) D (Digital Coin Meter) L (Prep for Remote/Central Pay) N (Non-Coin - OPL) R (Cardmate Plus II) X (Prep for Coin Meter) Y (Prep for Card Reader)
5	-	Speed	2 (2-Speed) 3 (3-Speed) F (F-Speed) V (Variable Speed)
6	-	Voltage	B (120/60/1/2) C (380-415/50/3/4) D (220-240/50/3/3) E (220-240/50/1/2) F (440-480/60/3/3) J (220/50/3/3) N (440-480/50-60/3/3) O (200-240/60/3/3) P (380-415/50-60/3/3) Q (200-240/50-60/3/3) X (200-240/50-60/1/3) Y (208-240/60/1/2)
7	-	Side Panel	N (Network Board Installed) P (Network Adaptable) U (Standard Specs) 1 (Stainless Steel) 2 (Network Board Installed with Stainless Sides) 3 (Network Adaptable with Stainless Sides)
8	-	Design	1-4 and 6

© Copyright, Alliance Laundry Systems LLC – DO NOT COPY or TRANSMIT

Decals

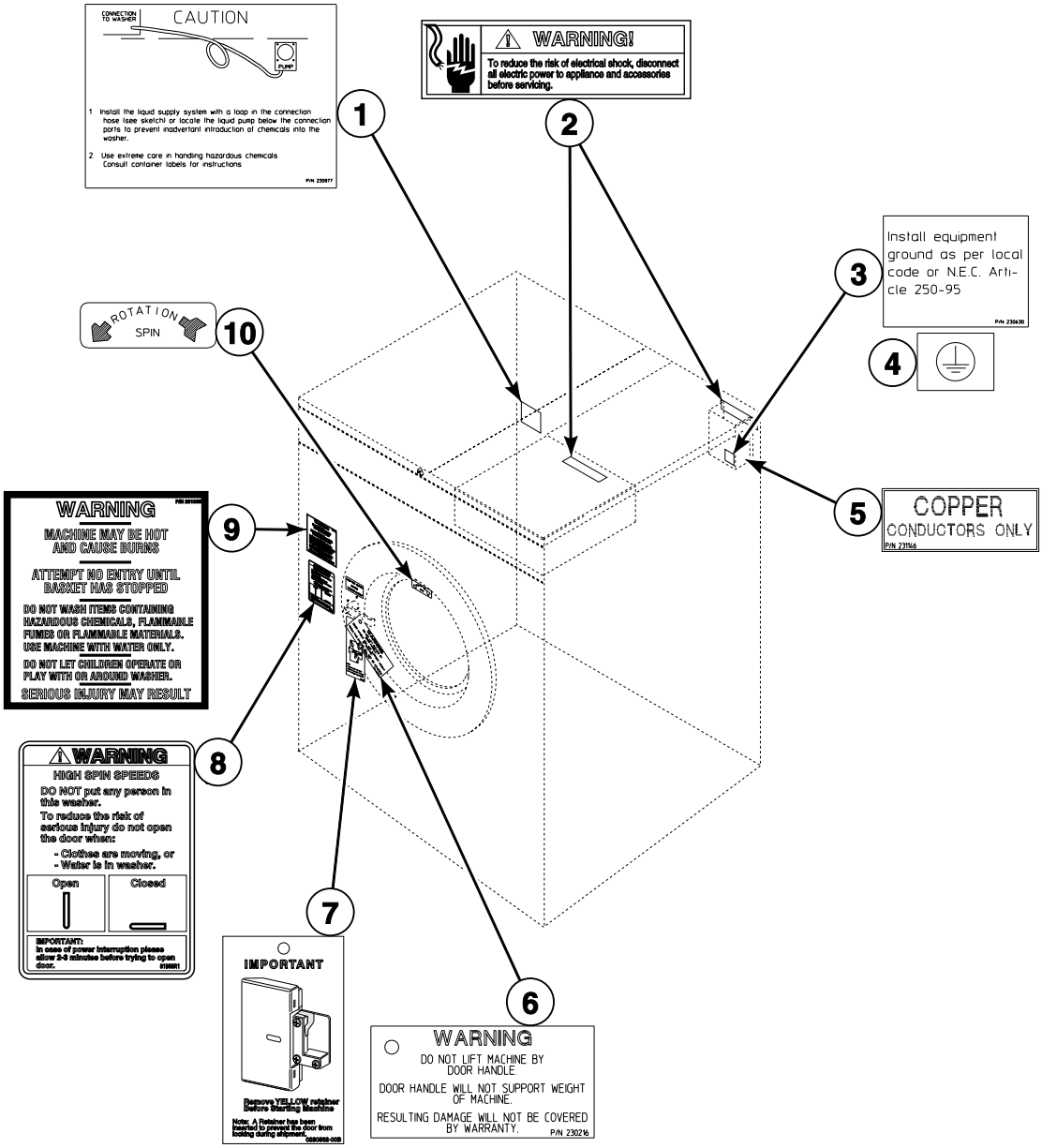

CHM2542P_F232190

© Copyright, Alliance Laundry Systems LLC – DO NOT COPY or TRANSMIT

Decals

REF	PART NO.	DESCRIPTION	COMMENTS
1	F230877	Liquid Supply Decal	PN, SN and VN models
2	D500316	Warning Label	
3	F230630	Ground Decal	
4	F230739	Ground Decal	
5	F231146	Conductor Decal	
6	F230216	Do Not Lift Decal	
7	F230528	Remove Door Lock Tag	PN, SN and VN models
8	81968	Door Warning Label	
9	F231065	Personal Injury Warning Decal	
10	F230693	Counterclockwise Spin Rotation Decal	English
	F230914	Spin Rotation Decal	Universal

© Copyright, Alliance Laundry Systems LLC – DO NOT COPY or TRANSMIT

Control Panel Decals and Controls - PN, SN and VN Models

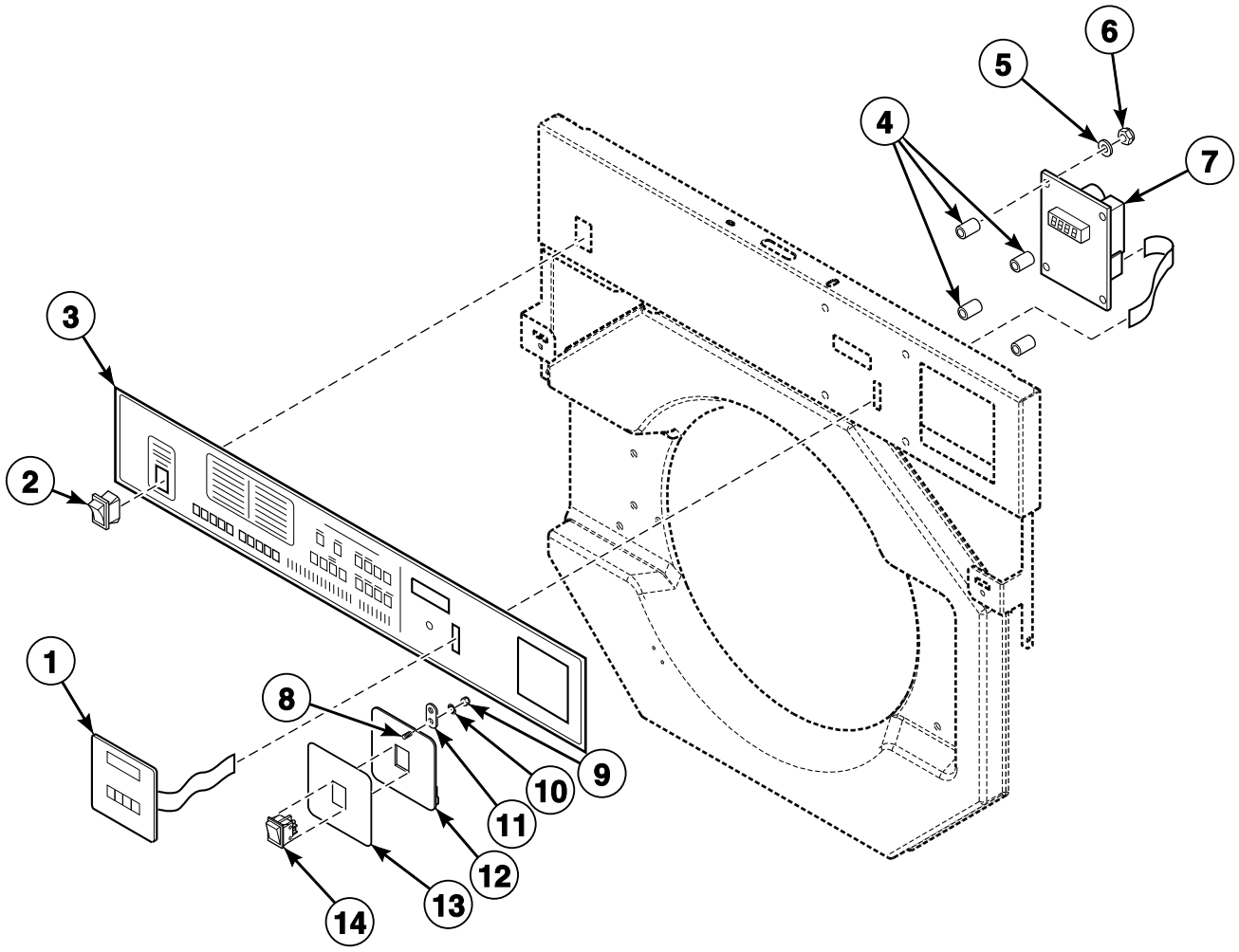

CHM2486P_F232190

© Copyright, Alliance Laundry Systems LLC – DO NOT COPY or TRANSMIT

Control Panel Decals and Controls - PN, SN and VN Models

REF	PART NO.	DESCRIPTION	COMMENTS
1	F370576P	Keypad	UC models; English
	F340608P	Membrane Switch	SC models; English
	F340606P	Membrane Switch	SC and UC models; Icon
	F340614P	Membrane Switch	HC models
2	F340412	Momentary Switch	Models through 5/26/04
	F200120100	Momentary Switch	Models starting 5/27/04
3	F0231618-00	Control Panel Decal	Models UC20PN2 and UC20VN2; English
	N/A	Control Panel Decal	Models UC30PN2 and UC30VN2; English
	F0231608-00	Control Panel Decal	Models UC30PN2 and UC30VN2; Icon
	F0231601-32	Control Panel Decal	Models UC40PN2 and UC40VN2
	F200021041	Control Panel Decal	Models UC50PN2, UC50VN2, UC60PN2 and UC60VN2; English
	N/A	Control Panel Decal	Models UC50PN2, UC50VN2, UC60PN2 and UC60VN2; Icon
	F231467	Control Panel Decal	Model SC20VN2
	F231468	Control Panel Decal	Model SC30VN2
	F0231602-32	Control Panel Decal	Model SC40VN2
	F231470	Control Panel Decal	Models SC50VN2 and SC60VN2
	N/A	Control Panel Decal	Model HC20SN2
	N/A	Control Panel Decal	Model HC30SN2
	F0231603-32	Control Panel Decal	Model HC40SN2
	N/A	Control Panel Decal	Models HC50SN2 and HC60SN2
4	F401206	Spacer	
5	F431113	Washer	
6	F431022	Nut	
7	F370313-30P	Microcomputer	V computer
	F370555-11P	Board	P and S computer; Armstrong
	F370555-01P	Computer	P and S computer
8	F430173	Screw	
9	F430232	Nut	
10	F431106	Washer	
11	F601515	Clip	
12	F633098	Switch Plate Sub-Assembly	
13	F230840	Switch Plate Decal	SC and UC models; English
	N/A	Switch Plate Decal	SC and UC models; Icon
	N/A	Switch Panel Decal	HC models
14	F340411	Rocker Switch	Red

N/A = Part no longer available

© Copyright, Alliance Laundry Systems LLC – DO NOT COPY or TRANSMIT

Control Panel Decals and Controls - VC and VX Models

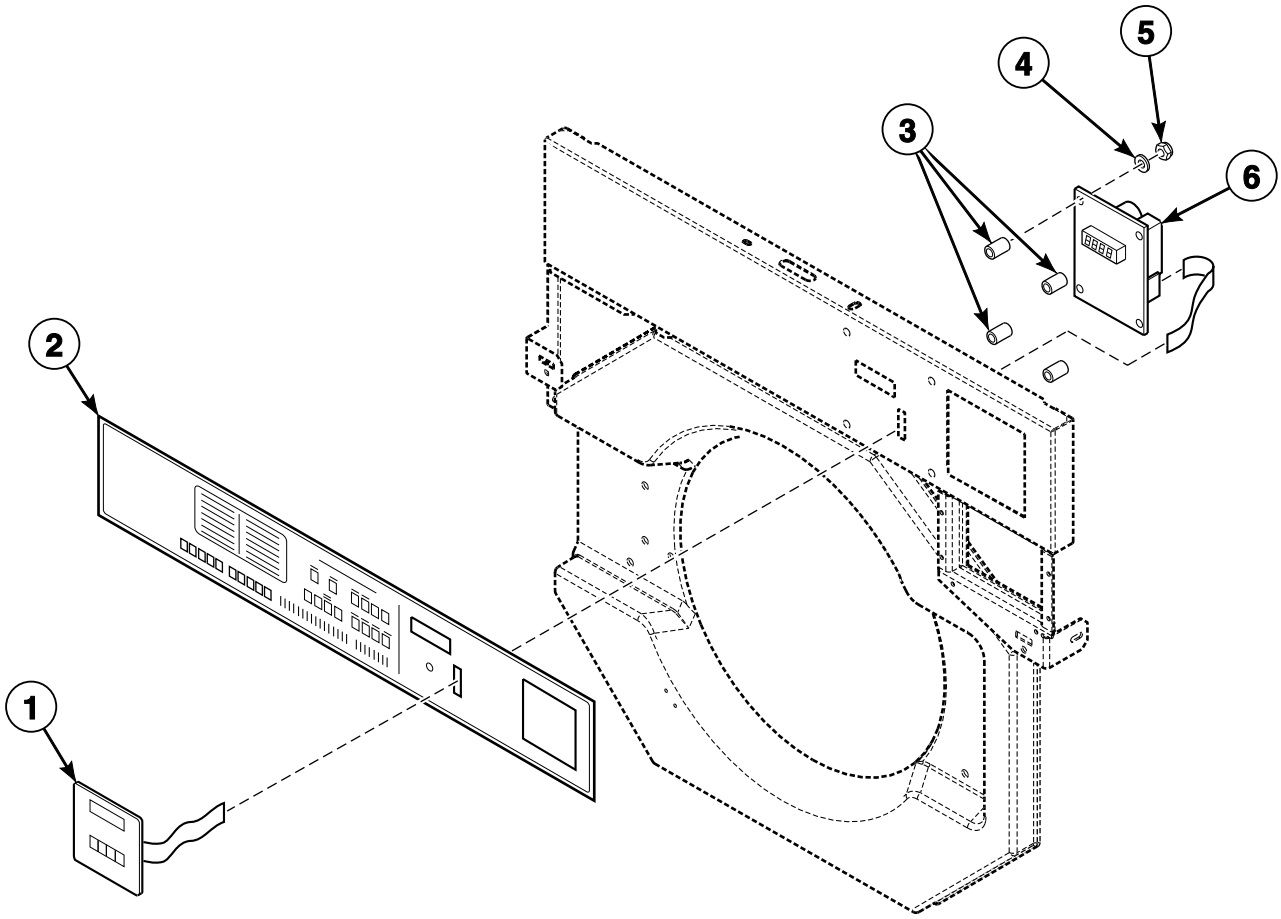

CHM2487P_F232190

© Copyright, Alliance Laundry Systems LLC – DO NOT COPY or TRANSMIT

Control Panel Decals and Controls - VC and VX Models

REF	PART NO.	DESCRIPTION	COMMENTS
1	F340615P	Membrane Switch	
2	N/A	Control Panel Decal	Models HC20VC2, HC20VX2, HC25VC2 and HC25VX2
	N/A	Control Panel Decal	Models HC30VC2 and HC30VX2
	F0231604-31	Control Panel Decal	Models HC40VC2 and HC40VX2
	F231553	Control Panel Decal	Models HC50VC2, HC50VX2, HC60VC2 and HC60VX2
3	F401206	Spacer	
4	F431113	Washer	
5	F431022	Nut	
6	F370313-40P	Microcomputer	

N/A = Part no longer available

© Copyright, Alliance Laundry Systems LLC – DO NOT COPY or TRANSMIT

Control Module - PN and SN Models

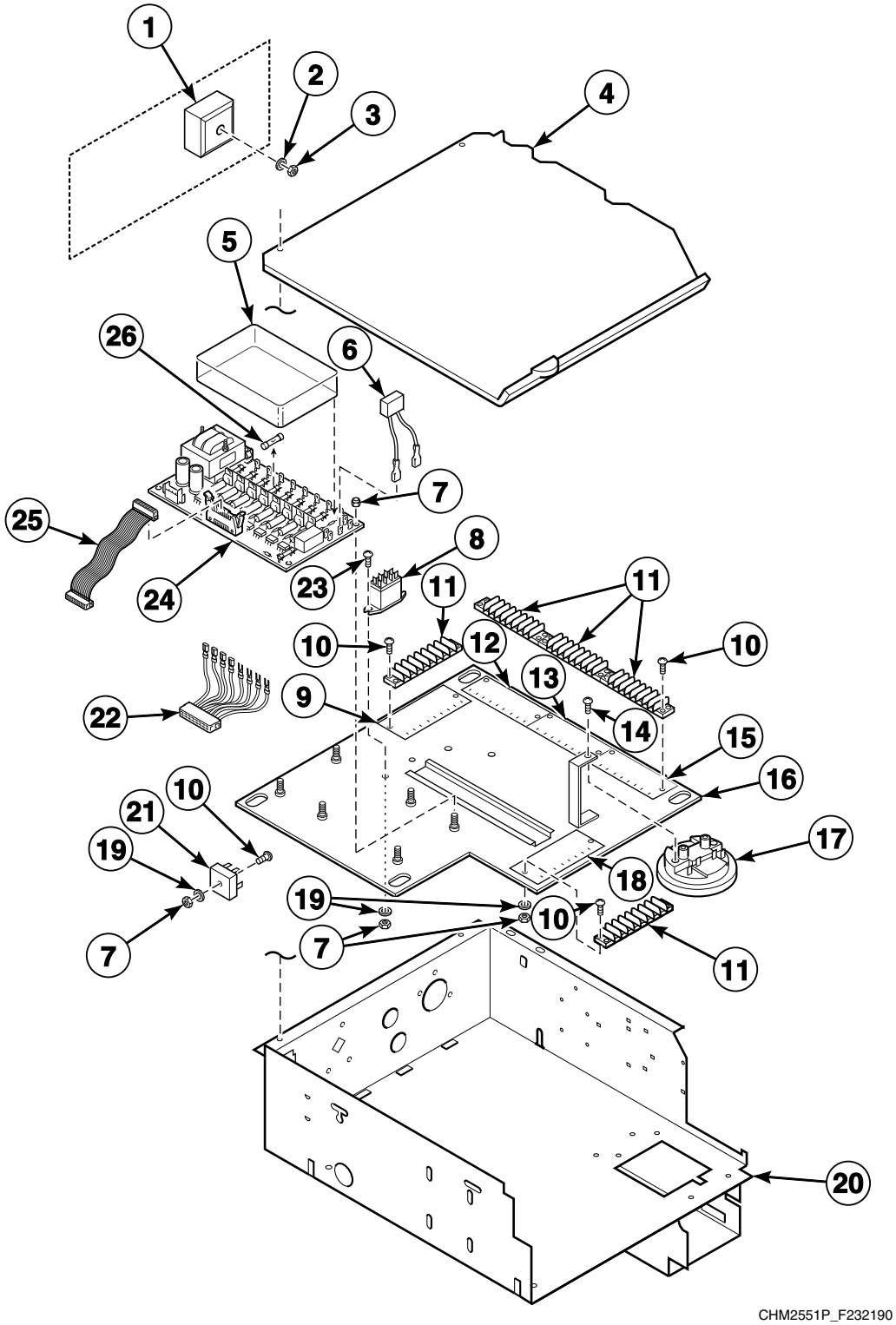

© Copyright, Alliance Laundry Systems LLC – DO NOT COPY or TRANSMIT

Control Module - PN and SN Models

REF	PART NO.	DESCRIPTION	COMMENTS
1	F200025200P	Door Lock Time Delay	
2	F431100	Washer	
3	F430211	Nut	
4	F0637179-00	Module Box Cover	
5	F140423	Cover	
6	F330217P	RC Network Filter	
7	F431022	Nut	
8	F330227	Flange Relay	120 Volt
	F330230	Flange Relay	220 Volt
9	F140912	Terminal Strip Insulator Decal	1-8
10	F430916	Screw	
11	F140738	Terminal Strip	
12	F140913	Terminal Strip Insulator Decal	9-16
13	F140914	Terminal Strip Insulator Decal	17-24
14	F430928	Screw	
15	F140915	Terminal Strip Insulator Decal	25-32
16	F0606950-02	Electrical Panel Sub-Assembly	
17	F0340343-10P	Water Level Switch	Models HC20SN2, HC30SN2, UC20PN2 and UC30PN2
	F8134602P	Pressure Switch	Models HC40SN2 and UC40PN2
	F0340345-10P	Water Level Switch	Models HC50SN2, HC60SN2, UC50PN2 and UC60PN2
18	F140916	Terminal Strip Insulator Decal	33-40
19	F431113	Washer	
20	F0637033-01	Control Box Assembly	
21	F370310	Bridge Rectifier	
22	F141871P	Input Harness Kit	
23	F430917	Screw	
24	F370449P	Output Board CCA	120 Volt
	F370450P	Output Board CCA	220 Volt
25	F140216P	Ribbon Cable	
26	F350110	Fuse	1 Amp; Slo blo
	F350109	Fuse	.5 Amp; Fast blo

© Copyright, Alliance Laundry Systems LLC – DO NOT COPY or TRANSMIT

Control Module - VC, VN and VX Models Through 8/1/04

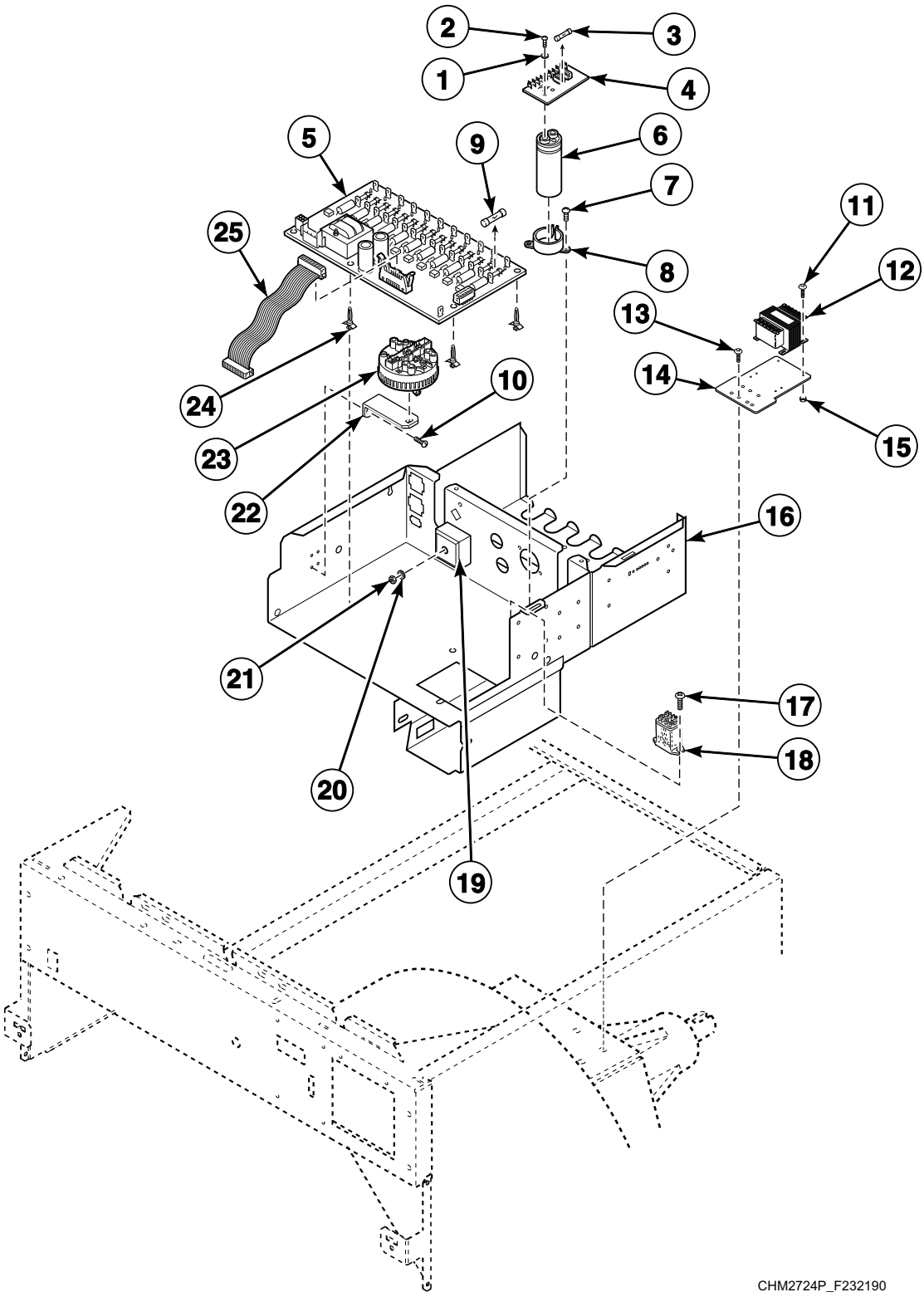

© Copyright, Alliance Laundry Systems LLC – DO NOT COPY or TRANSMIT

Control Module - VC, VN and VX Models Through 8/1/04

REF	PART NO.	DESCRIPTION	COMMENTS
	F200296000P	Computer and Door Lock Harness	Use with F037044860-1 Output CCA
	F370310	Bridge Rectifier	
1	F431108	Washer	VC and VX models
2	201415	Screw	VC and VX models
3	F350110	Fuse	VC and VX models
4	F0632387-01P	Door Lock CCA	120 Volt; VC and VX models
	N/A	Door Lock CCA	220 Volt; VC and VX models
5	F8206501P	Output Board VCMP Assembly	120 Volt
	F8206502P	Output Board VCMP Assembly	220 Volt; VN models through 7/22/04; VC and VX models
	F037044860-1	Output CCA	220 Volt; VN models starting 7/23/04
6	F370225P	Capacitor	VC and VX models
7	F430917	Screw	VC and VX models
8	F140612P	Capacitor Mounting Clamp	VC and VX models
9	F350108	Fuse	1/8 Amp
	F350109	Fuse	1/2 Amp
	F350110	Fuse	1 Amp
10	N/A	Screw	
11	F430108	Screw	
12	F360117P	Transformer	Models without pump drain option
	F350125	Fuse	1 Amp
13	F430107	Screw	
14	F200167700	Transformer Mounting Bracket	
15	F430215	Nut	
16	F0636969-00	Control Box Assembly	VC and VX models
	F0636969-01	Control Box Assembly	VN models
17	N/A	Screw	
18	F330227	Flange Relay	120 Volt
	F330230	Flange Relay	220 Volt
19	F200025200P	Door Lock Time Delay	VC and VX models
20	F431100	Washer	VC and VX models
21	F430211	Nut	VC and VX models
22	F631920	Water Level Switch Bracket	
23	F0340343-10P	Water Level Switch	HC20, HC25, HC30, SC20, SC30, UC20 and UC30 models
	F8134602P	Pressure Switch	HC40, SC40 and UC40 models
	F0340345-10P	Water Level Switch	HC50, HC60, SC50, SC60, UC50 and UC60 models
24	F180501	Standoff	4 required
25	F140247	Ribbon Cable	Connects output board cca to microcomputer

N/A = Part no longer available

© Copyright, Alliance Laundry Systems LLC – DO NOT COPY or TRANSMIT

Control Module - VC, VN and VX Models Starting 8/2/04

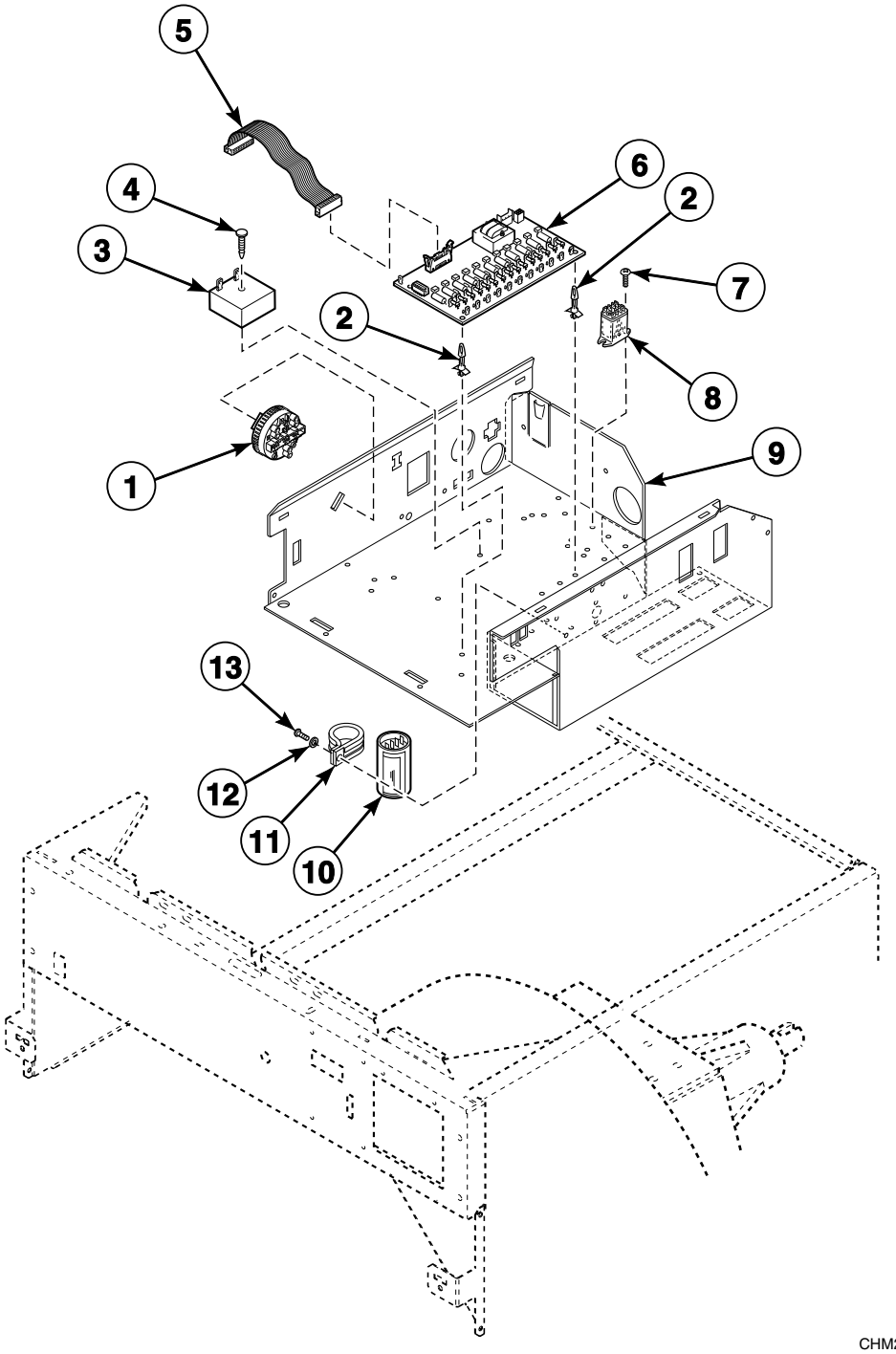

© Copyright, Alliance Laundry Systems LLC – DO NOT COPY or TRANSMIT

Control Module - VC, VN and VX Models Starting 8/2/04

REF	PART NO.	DESCRIPTION	COMMENTS
1	F0340343-10P	Water Level Switch	HC20, HC25, HC30, SC20, SC30, UC20 and UC30 models
	F8134602P	Pressure Switch	HC40, SC40 and UC40 models
	F0340345-10P	Water Level Switch	HC50, HC60, SC50, SC60, UC50 and UC60 models
2	F180501	Standoff	4 required
3	F0330404-00P	Timer	VC and VX models; VN models through 2/10/05
4	F0432316-00	Ratchet Fastener	VC and VX models; VN models through 2/10/05
5	F140247	Ribbon Cable	Connects output board cca to microcomputer
6	F8206502P	Output Board VCMP Assembly	220 Volt; VC and VX models
	F037044860-1	Output CCA	220 Volt; VN models
	F350108	Fuse	1/8 Amp
	F350109	Fuse	1/2 Amp
	F350110	Fuse	1 Amp
7	F0430165-00	Screw	VC and VX models; VN models through 2/10/05
8	F330230	Flange Relay	220 Volt; VC and VX models; VN models through 2/10/05
9	F200100101	Module Box Assembly	VC and VX models
	F200100100	Module Box Assembly	VN models
10	F340002	Motor Switch	All 1 Phase models except B-voltage models
11	F0340722-00	Switch Clamp	
12	F430311	Washer	
13	F430177	Screw	

© Copyright, Alliance Laundry Systems LLC – DO NOT COPY or TRANSMIT

Contactors

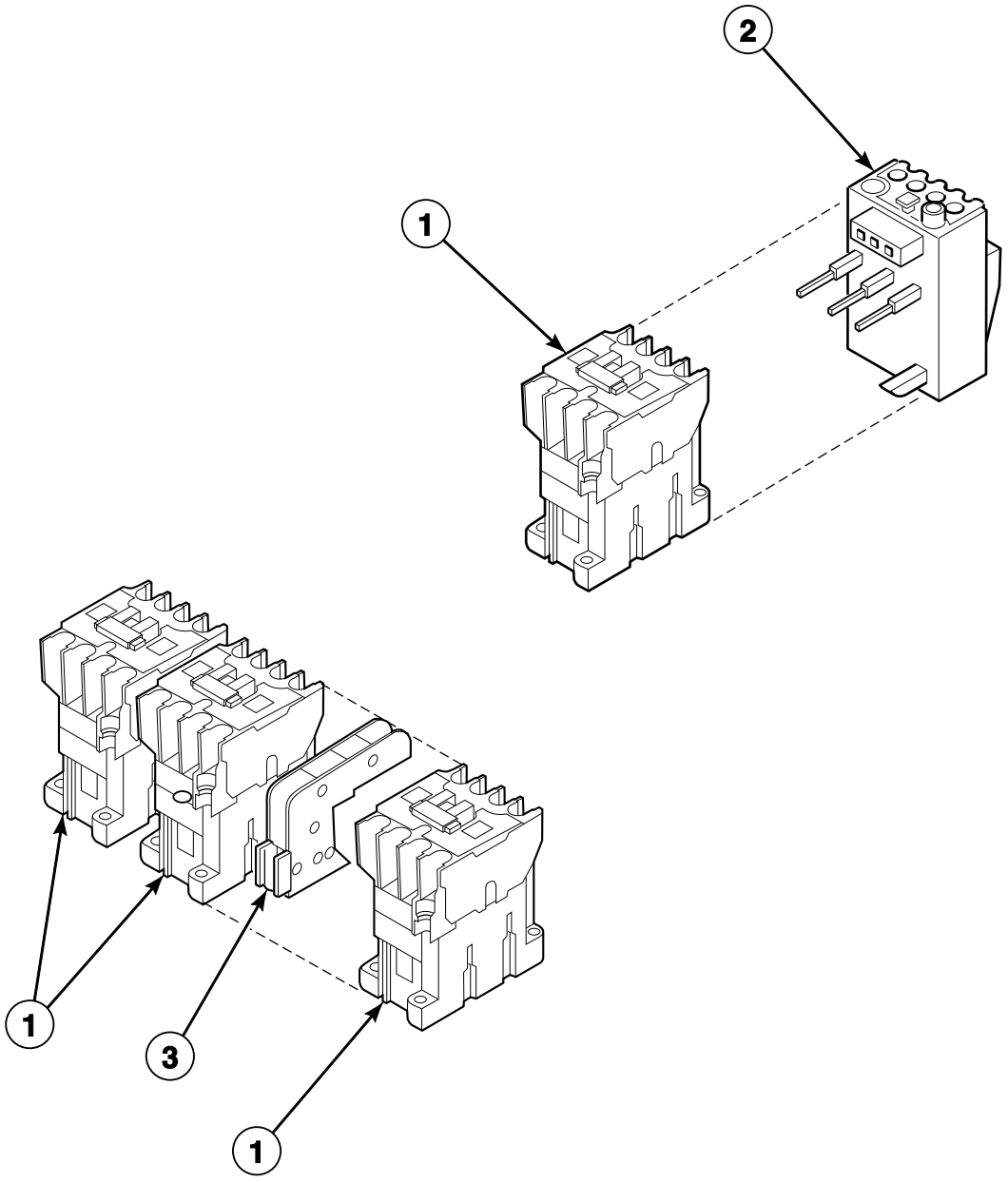

CHM1762P_F232190

© Copyright, Alliance Laundry Systems LLC – DO NOT COPY or TRANSMIT

Contactors

REF	PART NO.	DESCRIPTION	COMMENTS
1	F330175P	Contactor	120 Volt
	F330177P	Contactor	220 Volt
2	F8344001P	Overload Contactor	HC20, HC25, HC30, SC20, SC30, UC20 and UC30 models; E and Y-voltage
	F8176101P	Overload Contactor	HC40, SC40 and UC40 models Y-voltage; HC50, SC50 and UC50 models
3	F330186P	Interlock Contactor	

© Copyright, Alliance Laundry Systems LLC – DO NOT COPY or TRANSMIT

Optional Coin Box

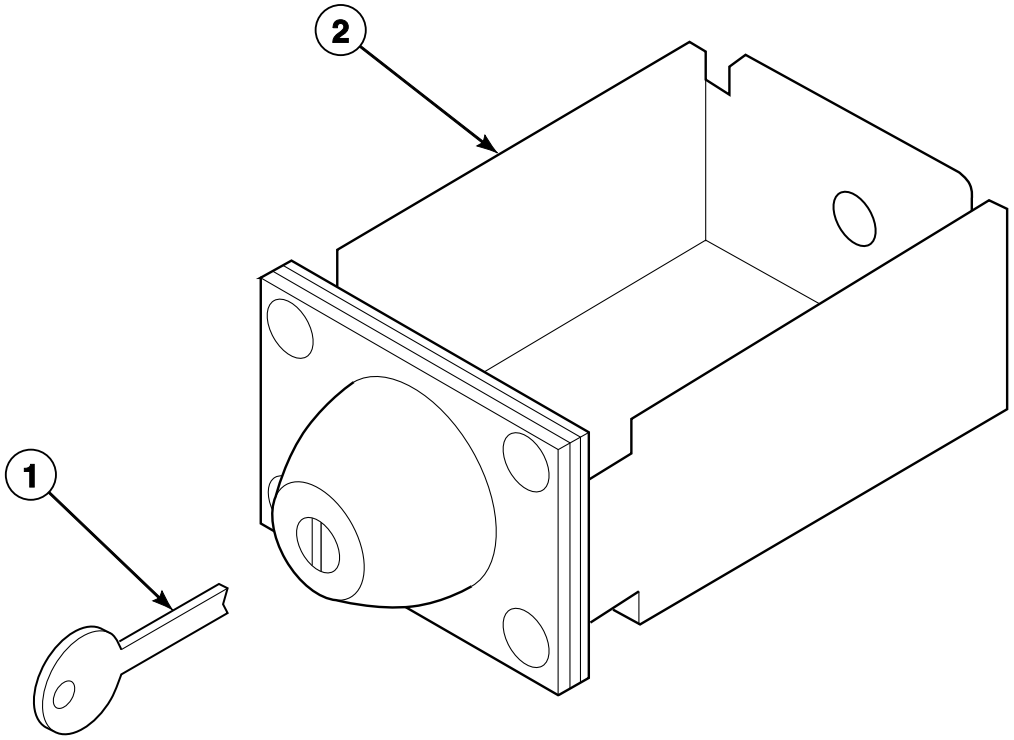

CHM1764P_F232190

© Copyright, Alliance Laundry Systems LLC – DO NOT COPY or TRANSMIT

Optional Coin Box

REF	PART NO.	DESCRIPTION	COMMENTS
1	F160420	Key	UG21
	F160421	Key	UG22
	N/A	Key	UG23
	F160423	Key	UG24
	N/A	Key	UG25
2	F160672	Coin Box	UG21; Long
	F160673P	Coin Box	UG22; Long
	N/A	Coin Box	UG23; Long
	N/A	Coin Box	UG24; Long
	N/A	Coin Box	UG25; Long

N/A = Part no longer available

© Copyright, Alliance Laundry Systems LLC – DO NOT COPY or TRANSMIT

W2000 Coin Meter Assembly - VC and VX Models; Single Drop

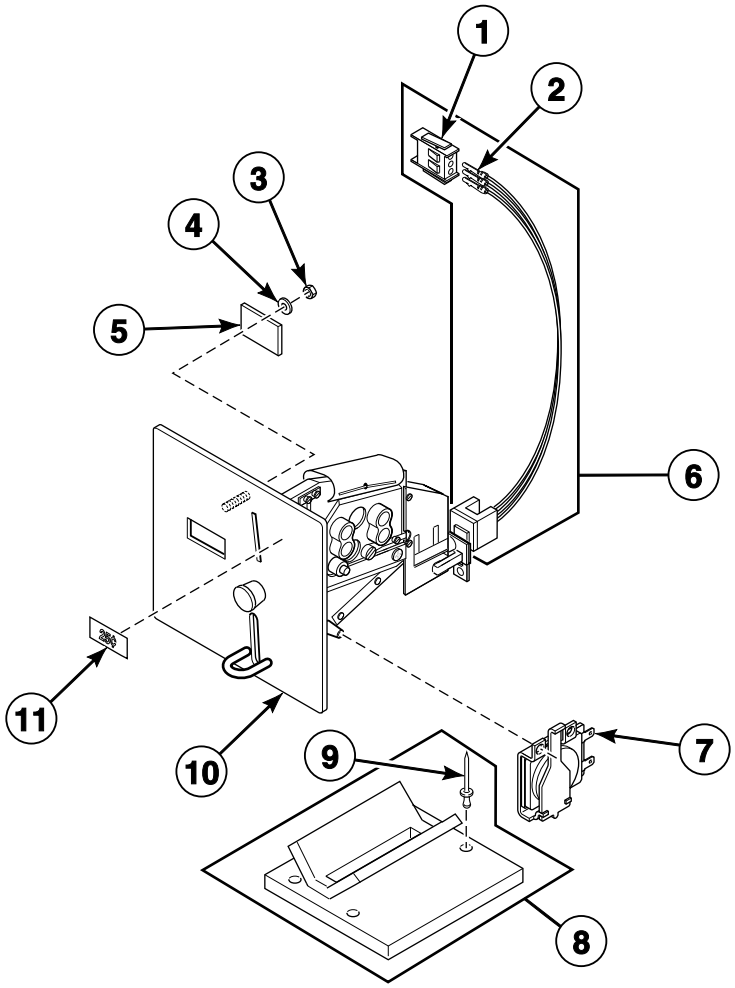

CHM2691P_F232190

© Copyright, Alliance Laundry Systems LLC – DO NOT COPY or TRANSMIT

W2000 Coin Meter Assembly - VC and VX Models; Single Drop

REF	PART NO.	DESCRIPTION	COMMENTS
1	F140571	Male Connector	
2	00430	Female Pin Terminal	
3	F430243	Nut	
4	N/A	Washer	
5	F608925	Coin Meter Insert	
6	F775801-03P	Optic Switch Kit	Includes items 1 and 2
7	F160466P	Coin Meter Blocking Coil	120 Volt
	F160467P	Coin Meter Blocking Coil	220 Volt
8	F200002502P	Coin Guide Assembly	Includes item 9
9	F431215	Pop Rivet	
10	F200003800P	Coin Meter Assembly	U.S. $.25; 120 Volt; Includes items 1-7, 11 and F775302-03 Coin Meter Kit
	F200003801	Coin Meter Assembly	10 Taiwan; 120 Volt; Includes items 1-7 and F200115001 Coin Meter Assembly
	F200003802P	Coin Meter Assembly	.880 token; 220 Volt; Includes items 1-7 and F160692 Coin Meter
	F200003803	Coin Meter Assembly	.990 token; 120 Volt; Includes items 1-7 and F200115003 Coin Meter Assembly
	F200003805	Coin Meter Assembly	.990 token; 220 Volt; Includes items 1-7 and F160717 Coin Meter
	F200003806P	Coin Meter Assembly	U.S. $.25; 220 Volt; Includes items 1-7, 11 and F160718 Coin Meter
	F200003807	Coin Meter Assembly	.08 jeton; 220 Volt; Includes items 1-7 and F160719 Coin Meter
	F200003808	Coin Meter Assembly	.800 token; 120 Volt; Includes items 1-7 and F0160735-00 Coin Meter
	F200003809	Coin Meter Assembly	500 wan and yen; 120 Volt; Includes items 1-7 and F0160739-00 Coin Meter
	F200003810	Coin Meter Assembly	.800 token; 220 Volt; Includes items 1-7
	F200003811	Coin Meter Assembly	500 wan and yen; 220 Volt; Includes items 1-7
	F200003812	Coin Meter Assembly	10 Taiwan; 220 Volt; Includes items 1-7
11	F231010	Coin Meter Insert Decal	.25 insert

N/A = Part no longer available

© Copyright, Alliance Laundry Systems LLC – DO NOT COPY or TRANSMIT

W2000 Coin Meter Assembly - VC and VX Models; Dual Drop

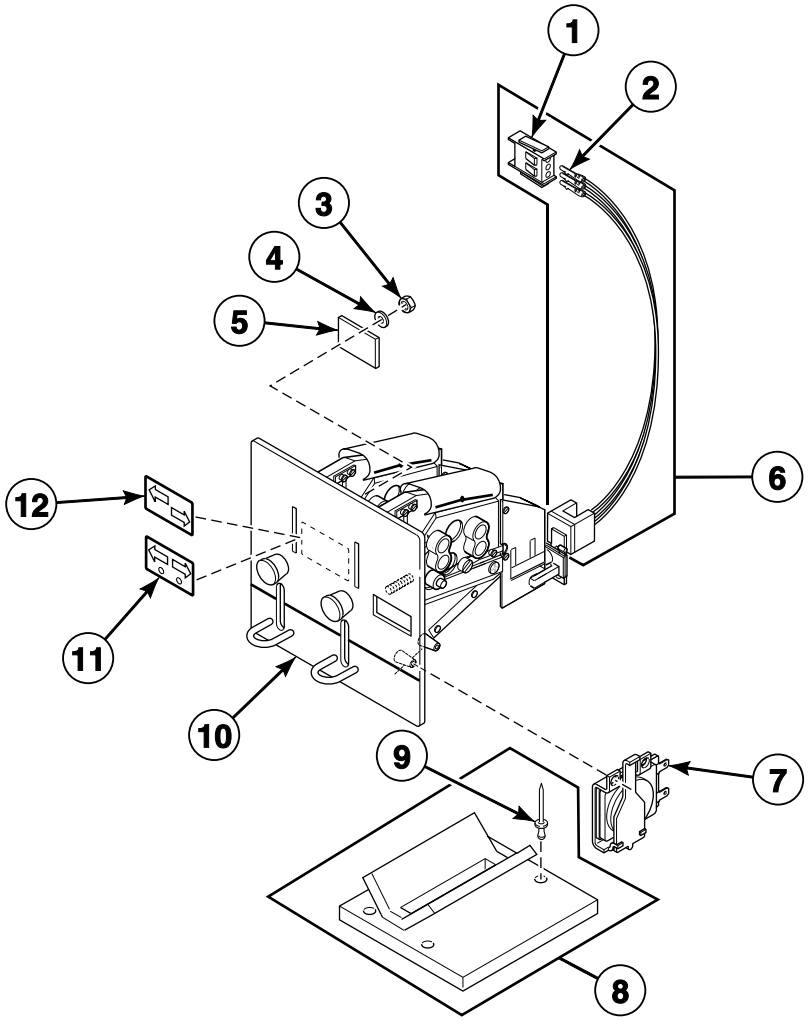

CHM2733P_F232190

© Copyright, Alliance Laundry Systems LLC – DO NOT COPY or TRANSMIT

W2000 Coin Meter Assembly - VC and VX Models; Dual Drop

REF	PART NO.	DESCRIPTION	COMMENTS
1	F140571	Male Connector	
2	00430	Female Pin Terminal	
3	F430243	Nut	
4	N/A	Washer	
5	F608925	Coin Meter Insert	
6	F775801-03P	Optic Switch Kit	Includes items 1 and 2
7	F160466P	Coin Meter Blocking Coil	120 Volt
	F160467P	Coin Meter Blocking Coil	220 Volt
8	F200002503	Coin Guide Assembly	Includes item 9
9	F431215	Pop Rivet	
10	F200005200	Coin Meter Assembly	U.K. 1 pound and 20 pence; 220 Volt; Includes items 1-7 and F160691 Coin Meter
	F200005201	Coin Meter Assembly	100 and 500 yen; 120 Volt; Includes items 1-7 and F160693 Coin Meter
	F200005202	Coin Meter Assembly	1 and 5 krona; 220 Volt; Includes items 1-7 and F160694 Coin Meter
	F200005203	Coin Meter Assembly	Australia 1.00 and .20; 220 Volt; Includes items 1-7 and F160695 Coin Meter
	F200005204	Coin Meter Assembly	1 and 5 rand; 220 Volt; Includes items 1-7 and F160698 Coin Meter
	F200005205	Coin Meter Assembly	1 and 5 shekel; 220 Volt; Includes items 1-7 and F160715 Coin Meter
	F200005206	Coin Meter Assembly	U.S. $1.00 and .25; 120 Volt; Includes items 1-7, 11 and F0160730-00 Coin Meter
	F200005207	Coin Meter Assembly	100 and 500 peseta; 220 Volt; Includes items 1-7
	F200005208	Coin Meter Assembly	.50 and 2.00 euro; 220 Volt; Includes items 1-7, 11 and F0160736-00 Coin Meter
	F200005209	Coin Meter Assembly	Canada $1.00 and .25; 120 Volt; Includes items 1-7, 11 and F0160740-00 Coin Meter
	F200005210	Coin Meter Assembly	U.S. $1.00 and .25; 220 Volt; Includes items 1-7
	F200005211	Coin Meter Assembly	Canada $1.00 and .25; 220 Volt; Includes items 1-7
	F200005212	Coin Meter Assembly	100 and 500 yen; 220 Volt; Includes items 1-7
11	F0231595-00	Coin Meter Decal	$1 and .25
12	N/A	Coin Meter Decal	.50 and 2.00 euro

N/A = Part no longer available

© Copyright, Alliance Laundry Systems LLC – DO NOT COPY or TRANSMIT

Fill Plumbing Assembly and External Supply Assembly (Drawing 1 of 2)

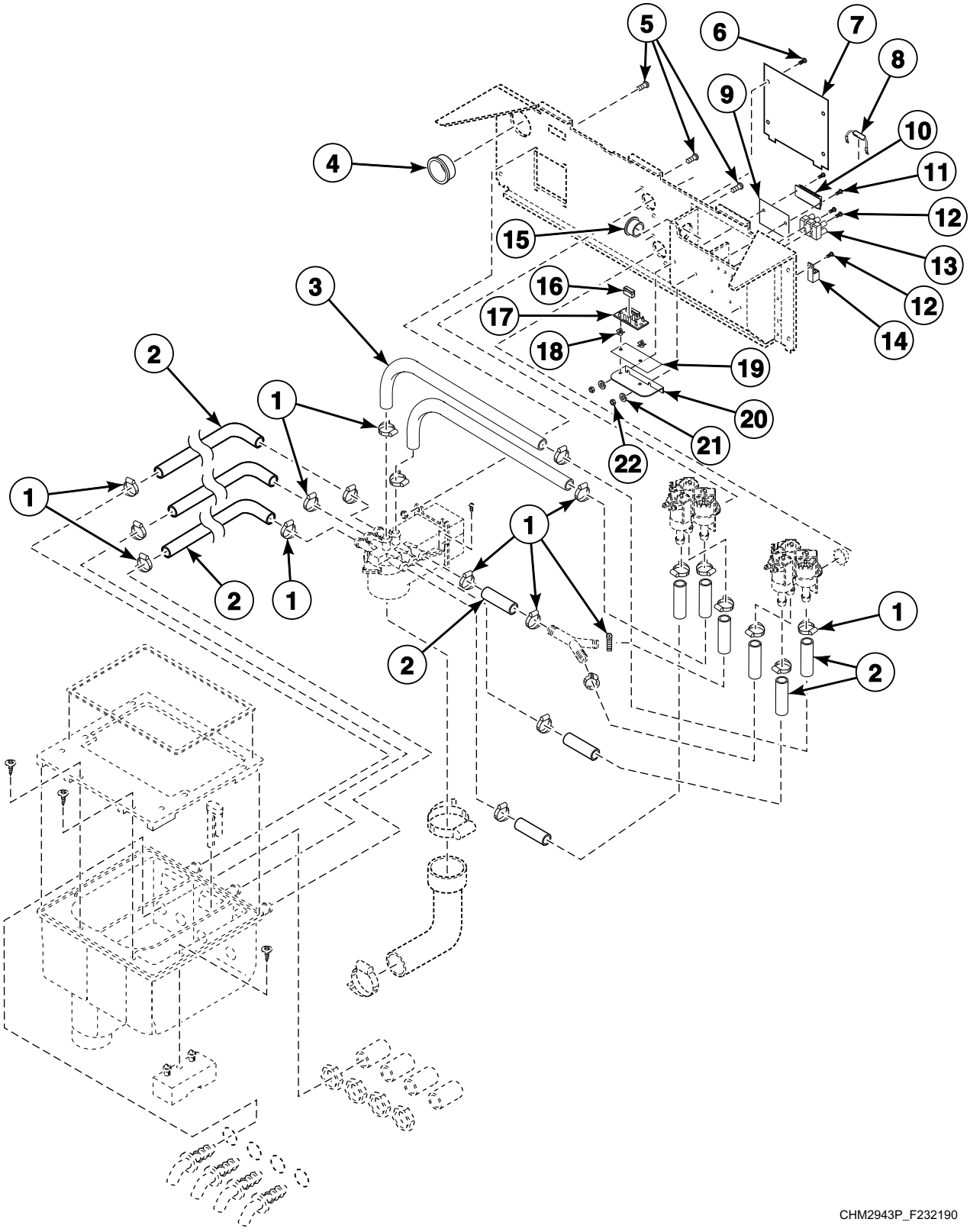

© Copyright, Alliance Laundry Systems LLC – DO NOT COPY or TRANSMIT

Fill Plumbing Assembly and External Supply Assembly (Drawing 1 of 2)

REF	PART NO.	DESCRIPTION	COMMENTS
1	36801	Hose Clamp	No. 8
2	F0200244-01	Vacuum Breaker Hose	HC20, HC25, HC30, SC20, SC30, UC20 and UC30 models
	F0200244-00	Vacuum Breaker Hose	HC40, HC50, HC60, SC40, SC50, SC60, UC40, UC50 and UC60 models
3	F200108P	Water Hose	Order 8 feet
4	F200139500	Grommet	PN, SN and VN models
5	F430948	Screw	
6	F430174	Screw	
7	F602533	Input Power Connection Box Cover	
8	F370117	Resistor	120 Volt; PN and SN models; VN models through 8/1/04
	F370116	Resistor	220 Volt; PN and SN models; VN models through 8/1/04
9	F231376-1	External Supply Connection Decal	B-voltage
	F231376-2	External Supply Connection Decal	C-voltage
	N/A	External Supply Connection Decal	D, E and J-voltage
	F231376-5	External Supply Connection Decal	O and Y-voltage
	F231376-6	External Supply Connection Decal	F and H-voltage
10	F140766	Terminal	8 place
11	F430916	Screw	
12	F430903	Screw	
13	F140747	Input Power Block	PN, SN, VC and VX models; VN models through 8/1/04; Standard models; 3 terminal
	F140748	Input Power Block	PN, SN, VC and VX models; VN models through 8/01/04; Standard models; 2 terminal
	F140746	Input Power Block	PN, SN, VC and VX models; VN models through 8/1/04; Standard models; 4 terminal
	M413865	Power Distribution Block	PN, SN, VC and VX models; VN models through 8/1/04; Models with heat; 3 terminal
	F140755	Input Terminal Block	PN, SN, VC and VX models; VN models through 8/1/04; Models with heat; 4 terminal
	F0140795-00	Input Block	VN models; Models starting 8/2/04; 2 terminal
	F0140798-00P	Input Block	VN models; Models starting 8/2/04; 3 terminal
	F0140799-00	Input Block	VN models; Models starting 8/2/04; 4 terminal
14	F140734	Ground Terminal Lug	
15	F170615	Grommet	Models through 6/29/05
	F140938	Snap Bushing	Models starting 6/30/05
16	F350115	Fuse	3 Amp; PN, SN, VC and VX models; VN models through 8/1/04
17	F0350312-10	Fuse Holder	PN, SN, VC and VX models; VN models through 8/1/04
18	F180506	Standoff	PN, SN, VC and VX models; VN models through 8/1/04
19	F231271	External Supply Fuse Decal	3 Amp; PN, SN, VC and VX models; VN models through 8/1/04
20	F633512	Fuse Holder Bracket	PN, SN, VC and VX models; VN models through 8/1/04
21	F431113	Washer	PN, SN, VC and VX models; VN models through 8/1/04
22	F431022	Nut	PN, SN, VC and VX models; VN models through 8/1/04

N/A = Part no longer available

© Copyright, Alliance Laundry Systems LLC – DO NOT COPY or TRANSMIT

Fill Plumbing Assembly and External Supply Assembly (Drawing 2 of 2)

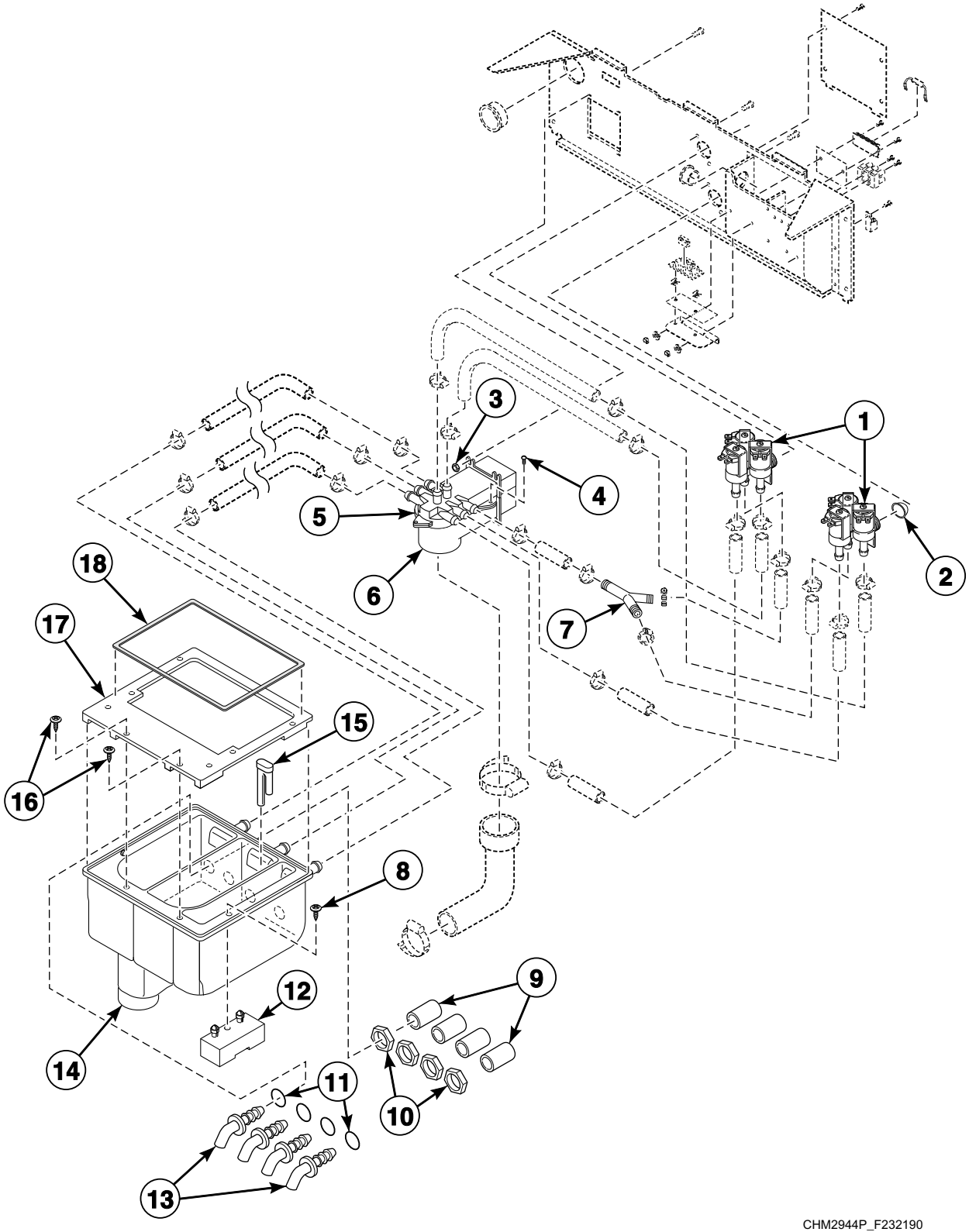

© Copyright, Alliance Laundry Systems LLC – DO NOT COPY or TRANSMIT

Fill Plumbing Assembly and External Supply Assembly (Drawing 2 of 2)

REF	PART NO.	DESCRIPTION	COMMENTS
	G582P3	Diaphragm and Guide Kit	Elbi; Includes G300194 Armature Guide and G300202 Diaphragm; Use with F0381736-00P 3-Way Valve, F0381737-00P 3-Way Valve, F0381738-00P 3-Way Valve, F0381750-00P 3-Way Valve, F0381766-00P 3-Way Valve
1	F0381765-00P	3-Way Valve	Standard thread; Cold; 120 Volt
	F0381766-00P	3-Way Valve	Standard thread; Hot; 120 Volt
	F0381738-00P	3-Way Valve	Standard thread; Cold; 240 Volt
	F0381737-00P	3-Way Valve	Standard thread; Hot; 240 Volt
	F0381769-00P	3-Way Valve	Metric thread; Cold; 120 Volt
	N/A	3-Way Valve	Metric thread; Hot; 120 Volt
	F0381736-00P	3-Way Valve	Metric thread; Cold; 240 Volt
	F0381750-00P	3-Way Valve	Metric thread; Hot; 240 Volt
2	F270200	Strainer	
3	F430231	Nut	
4	F430177	Screw	
5	F0150329-00	Vacuum Breaker Top	
	F603031	Vacuum Breaker Assembly	Includes items 3 and 5
6	F015033000	Vacuum Breaker Bottom	
7	F422808	Y Connector	
8	F0430268-00	Screw	
9	F190303	Cap	
10	802292	Nut	
11	801632	O-Ring	
12	F0150504-00	Supply Dispenser Standoff	
13	F8322001	Injection Nozzle	
	F730168	Injection Nozzle Kit	Includes items 9 and 10
14	F602374	Supply Dispenser Sub-Assembly	
	F200202201P	Supply Dispenser Assembly	Includes items 8-12 and 14-17
15	F150390	Siphon Tube	
16	F430956	Screw	
17	F0150503-00	Supply Dispenser Bezel	
18	F0170190-00P	Bezel Gasket	

N/A = Part no longer available

© Copyright, Alliance Laundry Systems LLC – DO NOT COPY or TRANSMIT

Filter (Optional) and Supply Hose

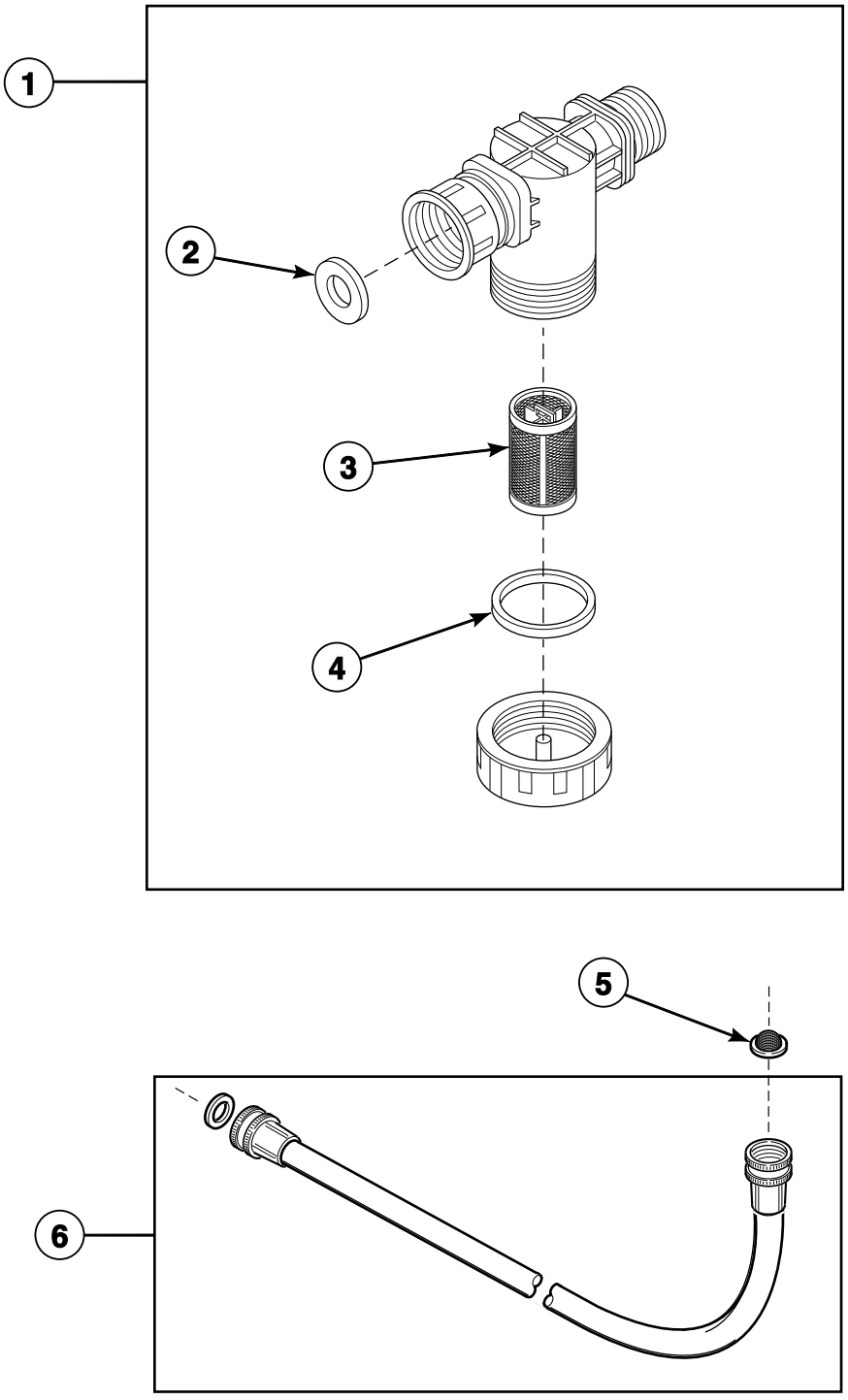

B091P_F232190

© Copyright, Alliance Laundry Systems LLC – DO NOT COPY or TRANSMIT

Filter (Optional) and Supply Hose

REF	PART NO.	DESCRIPTION	COMMENTS
1	F270306P	Filter	Standard thread
	F270305	Filter	Metric thread
2	20290	Washer	
3	F270406	Replacement Filter	.11 mm
	F270405	Replacement Filter	.25 mm
4	F270407	Filter Housing Cap Gasket	
5	803615	Washer	Filter
6	F200116	Fill Hose	3/8 inch; Standard thread
	F200164	Water Hose	3/4 inch; Standard thread
	F200165	Water Hose	3/8 inch; Metric thread
	F200166	Water Hose	3/4 inch; Metric thread

© Copyright, Alliance Laundry Systems LLC – DO NOT COPY or TRANSMIT

Drain Valve Assembly - 20, 25 and 30 Pound Models

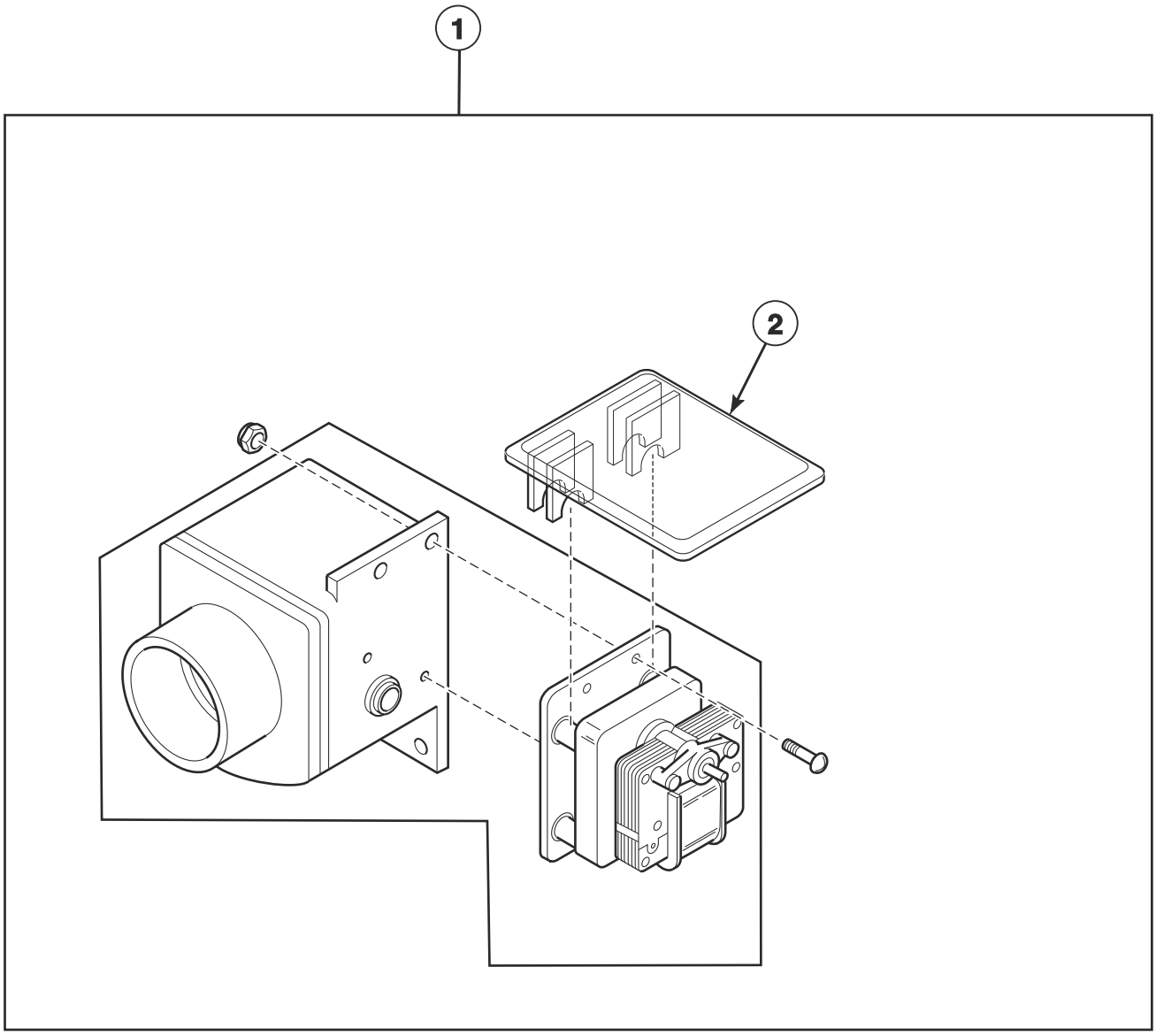

CHM2450P_F232190

© Copyright, Alliance Laundry Systems LLC – DO NOT COPY or TRANSMIT

Drain Valve Assembly - 20, 25 and 30 Pound Models

REF	PART NO.	DESCRIPTION	COMMENTS
	F8504601	Spring	
1	F602920	Drain Valve Assembly	120 Volt; Includes all items on the page, including the screw and nut
	F603175	Drain Valve Assembly	220 Volt; Includes all items on the page, including the screw and nut
2	F200133600	Drain Valve Cover	

© Copyright, Alliance Laundry Systems LLC – DO NOT COPY or TRANSMIT

Drain Valve Assembly - 40, 50 and 60 Pound Models

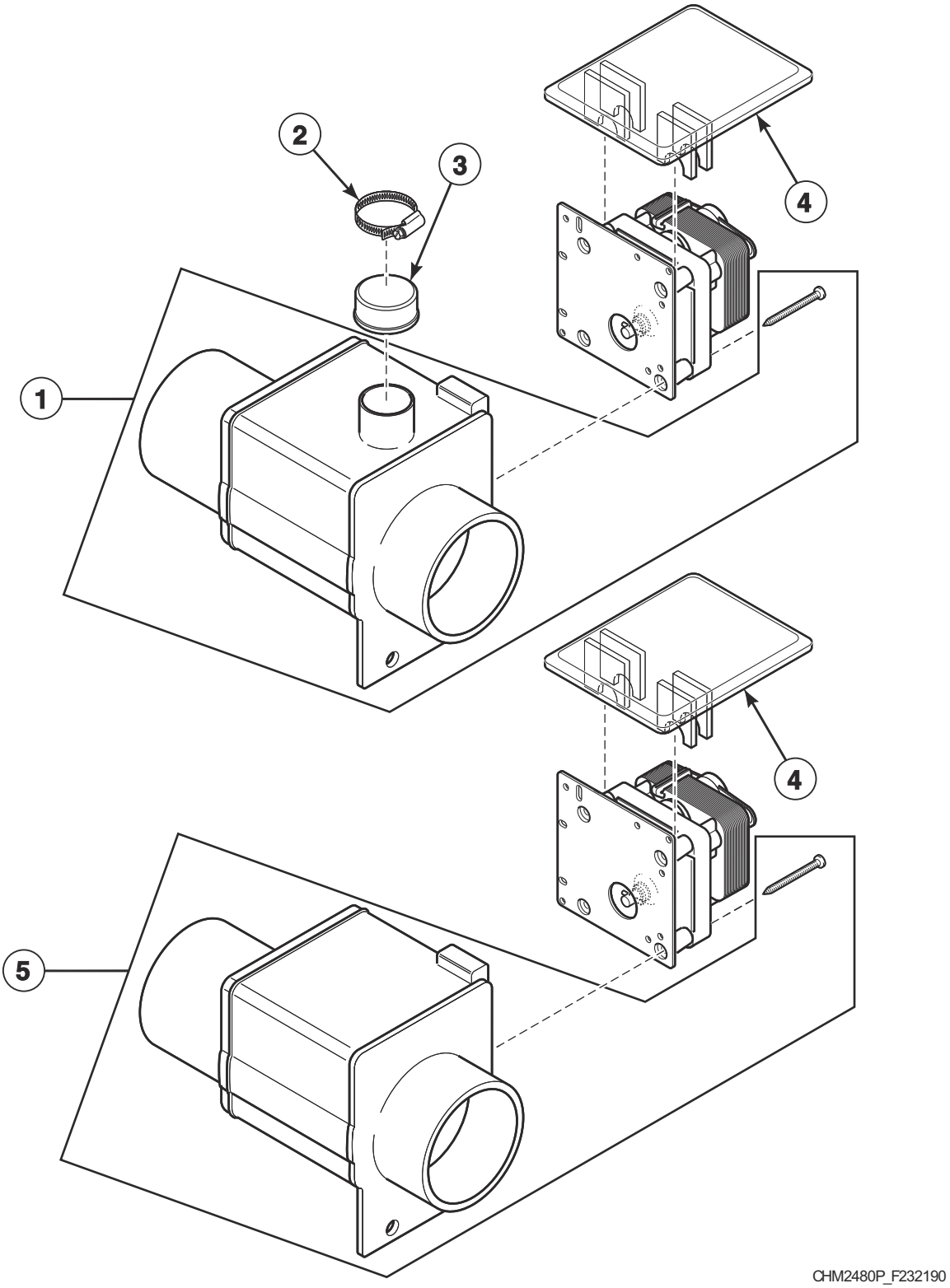

© Copyright, Alliance Laundry Systems LLC – DO NOT COPY or TRANSMIT

Drain Valve Assembly - 40, 50 and 60 Pound Models

REF	PART NO.	DESCRIPTION	COMMENTS
	F8504701	Spring	Use with F038062800 Drain Valve
	F200166300	Drain Valve Kit	120 Volt; Includes items 1, 3, 4 and screw; HC50, HC60, SC50, SC60, UC50 and UC60 models with heat option
	F200166400	Drain Valve Kit	220 Volt; Includes items 1, 3, 4 and screw; HC50, HC60, SC50, SC60, UC50 and UC60 models with heat option
	F200166302	Drain Valve Kit	120 Volt; Includes items 4 and 5; Standard
	F200166402	Drain Valve Kit	220 Volt; Includes items 4 and 5; Standard
1	F8406304	Drain Valve	120 Volt; Includes screw; HC50, HC60, SC50, SC60, UC50 and UC60 models with heat option
	F8406303	Drain Valve	220 Volt; Includes screw; HC50, HC60, SC50, SC60, UC50 and UC60 models with heat option
2	F200215	Hose Clamp	No. 28; HC50, HC60, SC50, SC60, UC50 and UC60 models with heat option
3	F150352	Overflow Plug	HC50, HC60, SC50, SC60, UC50 and UC60 models with heat option
4	F200133600	Drain Valve Cover	
5	N/A	Drain Valve	120 Volt; Includes screw; Standard
	N/A	Drain Valve Kit	220 Volt; Includes screw; Standard

N/A = Part no longer available

© Copyright, Alliance Laundry Systems LLC – DO NOT COPY or TRANSMIT

Drain Valve Assembly, Hoses and Air Trap - 50 and 60 Pound Models with Heat Shell

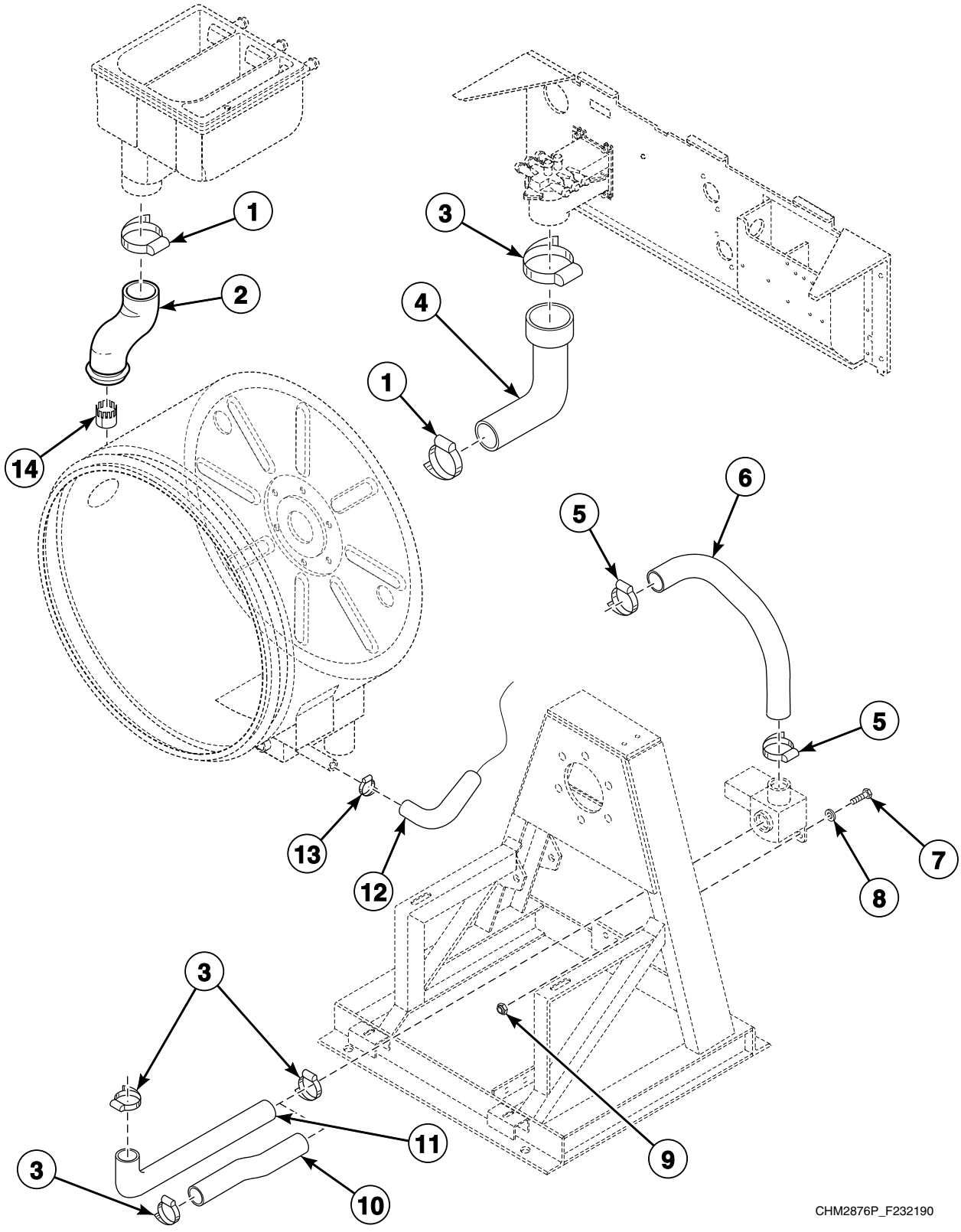

© Copyright, Alliance Laundry Systems LLC – DO NOT COPY or TRANSMIT

Drain Valve Assembly, Hoses and Air Trap - 50 and 60 Pound Models with Heat Shell

REF	PART NO.	DESCRIPTION	COMMENTS
1	F200213	Hose Clamp	No. 40
2	F8071701	Supply Dispenser Hose	
3	N/A	Hose Clamp	No. 48
4	F150340	Vacuum Breaker Hose	HC50, SC50 and UC50 models
	F0150340-01	Vacuum Breaker Fill Hose	HC60, SC60 and UC60 models
5	F200215	Hose Clamp	No. 28
6	F150332	Overflow Hose	
7	F430103	Screw	
8	F430317	Washer	
9	F430215	Nut	
10	F0150340-01	Vacuum Breaker Fill Hose	HC60, SC60 and UC60 models
11	F150356	Drain Hose	
12	F020014200	Air Trap Hose	
13	F200222	Hose Clamp	No. 10
14	F150419	Supply Dispenser Baffle	Optional; Used to prevent water entering the supply dispenser during an extraction step

N/A = Part no longer available

© Copyright, Alliance Laundry Systems LLC – DO NOT COPY or TRANSMIT

Drain Assembly, Hoses and Air Trap - All Models Except 50 and 60 Pound Models with Heat Shell

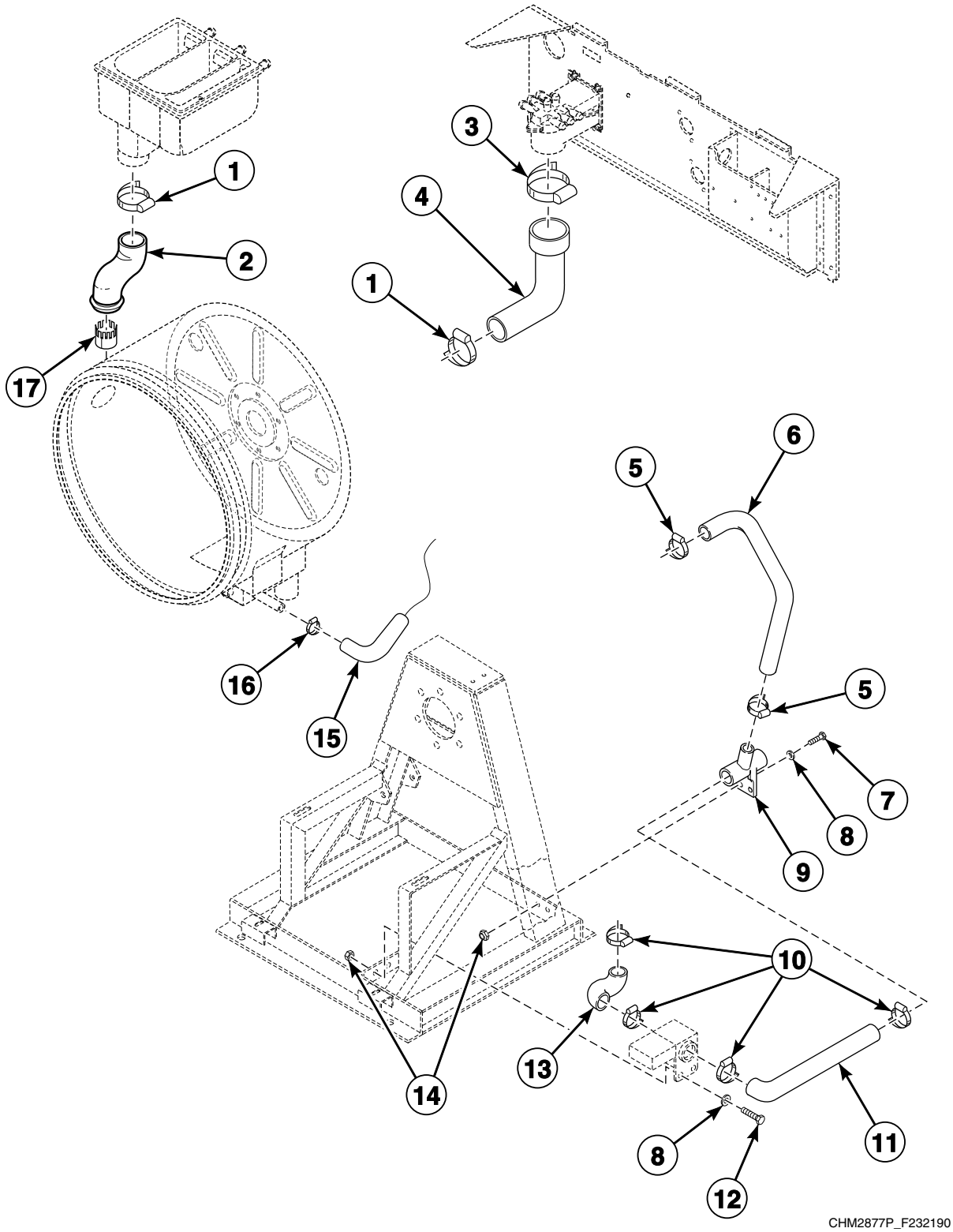

© Copyright, Alliance Laundry Systems LLC – DO NOT COPY or TRANSMIT

Drain Assembly, Hoses and Air Trap - All Models Except 50 and 60 Pound Models with Heat Shell

REF	PART NO.	DESCRIPTION	COMMENTS
1	F200213	Hose Clamp	No. 40
2	F0200236-01	Supply Dispenser Hose	HC20, HC30, SC20, SC30, UC20 and UC30 models
	F8071701	Supply Dispenser Hose	HC40, HC50, HC60, SC40, SC50, SC60, UC40, UC50 and UC60 models
	F8061601	Supply Dispenser Hose	Models HC25VC2 and HC25VX2
3	N/A	Hose Clamp	No. 48
4	F150321	Vacuum Breaker Hose	HC20, HC30, HC40, SC20, SC30, SC40, UC20, UC30 and UC40 models
	F150372	Fill Hose	Models HC25VC2 and HC25VX2
	F150340	Vacuum Breaker Hose	HC50, SC50 and UC50 models
	F0150340-01	Vacuum Breaker Fill Hose	HC60, SC60 and UC60 models
5	F200215	Hose Clamp	No. 28
6	F200125800	Overflow Hose	HC30, SC30 and UC30 models; Standard, electric and steam heat; Not used on pump drain models
	F0200238-00	Overflow Hose	HC40, SC40 and UC40 models; Standard, electric and steam heat
	F150417	Overflow Hose	HC50, HC60, SC50, SC60, UC50 and UC60 models; Standard models without heat
	F150332	Overflow Hose	HC50, HC60, SC50, SC60, UC50 and UC60 models; Electric and steam heat
	F150317	Overflow Hose	HC20, HC25, SC20 and UC20 models; Standard, electric and steam heat; Not used on pump drain models
7	F430103	Screw	
8	F430317	Washer	
9	F8017101	Drain Connector Tee	HC20, HC25, HC30, SC20, SC30, UC20 and UC30 models
	F8752101	Drain Tee	HC40, HC50, HC60, SC40, SC50, SC60, UC40, UC50 and UC60 models
10	F200213	Hose Clamp	HC20, HC25, HC30, HC40, SC20, SC30, SC40, UC20, UC30 and UC40 models
	N/A	Hose Clamp	HC50, HC60, SC50, SC60, UC50 and UC60 models
11	F150311	Rear Drain Hose	HC20, SC20 and UC20 models
	F200123400	Drain Hose	Rear; HC25, HC30, SC30 and UC30 models
	F0200239-00	Rear Drain Hose	HC40, SC40 and UC40 models; Models through 1/25/05
	F200185300	Drain Hose	Rear; HC40, SC40 and UC40 models; Models starting 1/26/05
	F200123500	Drain Hose	Rear; HC50, HC60, SC50, SC60, UC50 and UC60 models
12	F430103	Screw	
13	F150312	Front Drain Hose	HC20, HC25, HC30, SC20, SC30, UC20 and UC30 models
	F0200240-00	Front Drain Hose	HC40, SC40 and UC40 models; Models through 1/25/05
	F200185200	Drain Hose	Front; HC40, SC40 and UC40 models; Models starting 1/26/05
	F8035801	Front Drain Hose	HC50, HC60, SC50, SC60, UC50 and UC60 models
14	F430215	Nut	
15	F020014200	Air Trap Hose	
16	F200222	Hose Clamp	No. 12
17	F150419	Supply Dispenser Baffle	Optional; Used to prevent water entering the supply dispenser during an extraction step

N/A = Part no longer available

© Copyright, Alliance Laundry Systems LLC – DO NOT COPY or TRANSMIT

Pump Drain Option - HC30, SC30 and UC30 E-Voltage Models

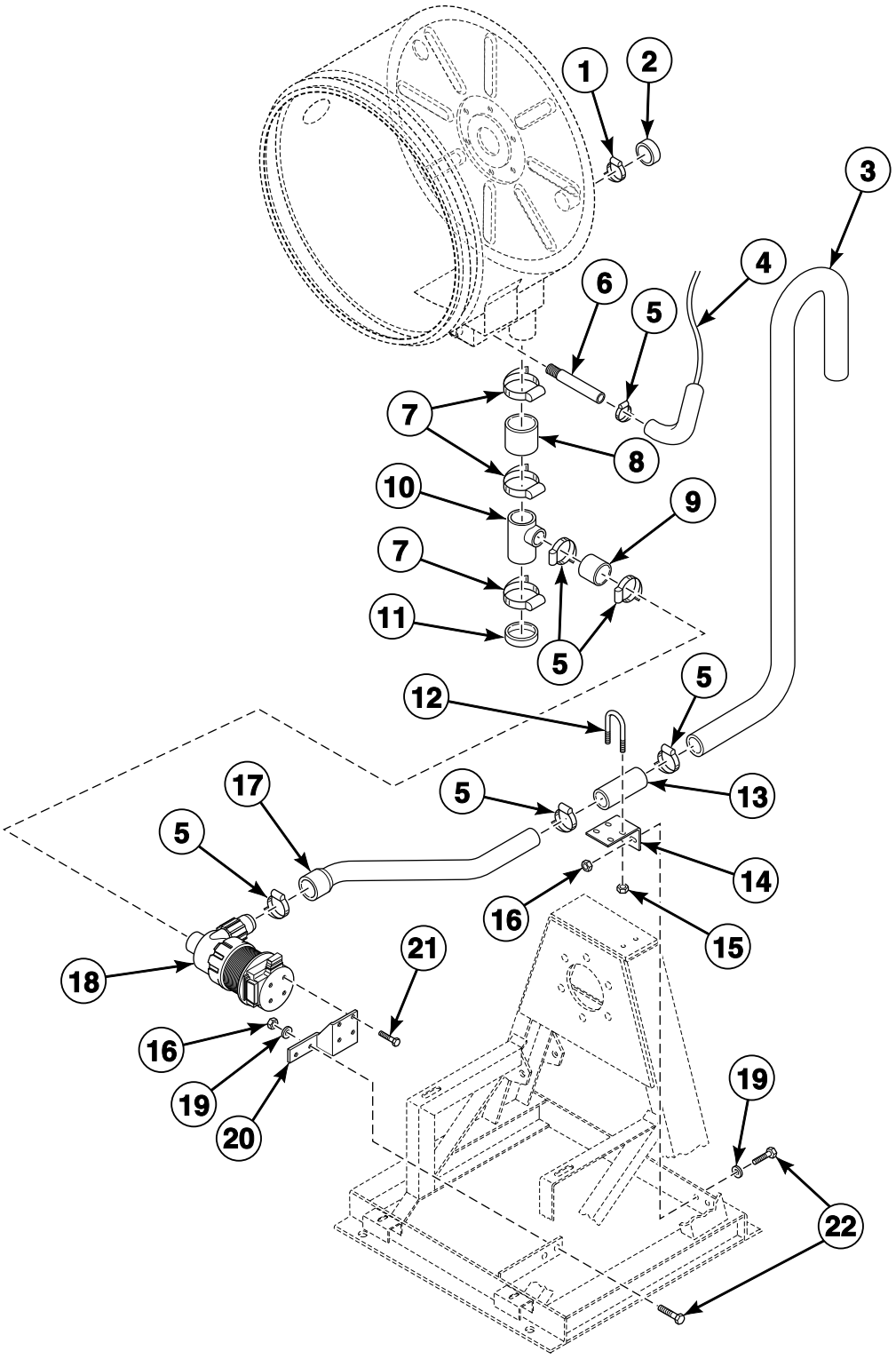

© Copyright, Alliance Laundry Systems LLC – DO NOT COPY or TRANSMIT

Pump Drain Option - HC30, SC30 and UC30 E-Voltage Models

REF	PART NO.	DESCRIPTION	COMMENTS
1	F200215	Hose Clamp	No. 28
2	F150352	Overflow Plug	
3	F150343	Rear Pump Drain Hose	
4	F020014200	Air Trap Hose	
5	F200204	Hose Clamp	No. 20
6	F634178	Air Chamber Nipple	
7	F200213	Hose Clamp	No. 40
8	F150311	Rear Drain Hose	
9	F634177	Pump Inlet Hose	
10	F633819	Pump Drain Trap Weldment	
11	F150443	Plug	
12	F200401P	U-Bolt Clamp	
13	N/A	Pipe	
14	F604147	Pump Drain Rear Connecting Bracket	
15	F430232	Nut	
16	F430215	Nut	
17	F150482	Pump Drain Outlet Hose	
18	F634463P	Pump	
19	F430317	Washer	
20	F634114	Pump Mounting Bracket	
21	F430179	Screw	
22	F430107	Screw	

N/A = Part no longer available

© Copyright, Alliance Laundry Systems LLC – DO NOT COPY or TRANSMIT

Pump Drain Option - All Models Except HC30, SC30 and UC30
E-Voltage Models

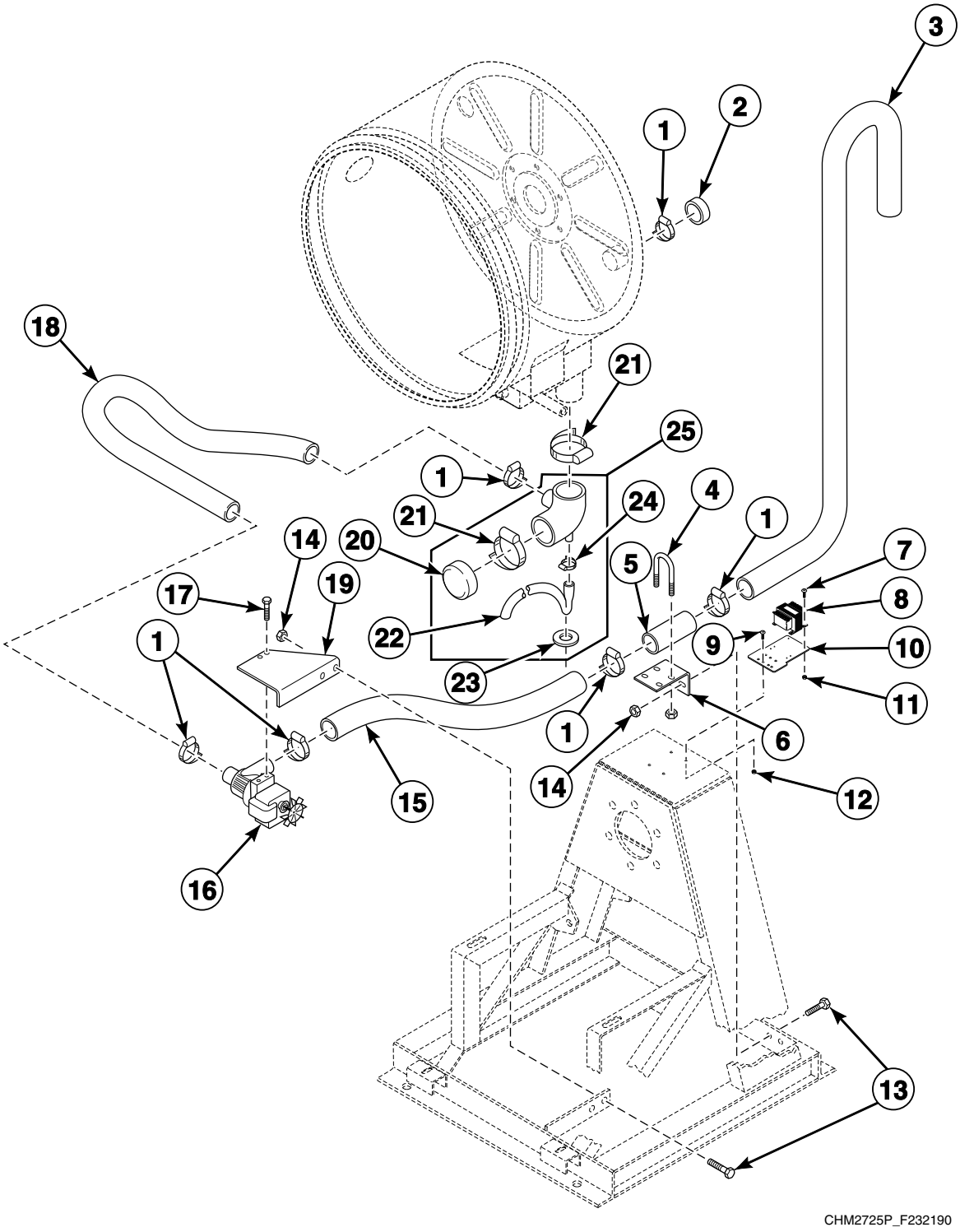

© Copyright, Alliance Laundry Systems LLC – DO NOT COPY or TRANSMIT

Pump Drain Option - All Models Except HC30, SC30 and UC30 E-Voltage Models

REF	PART NO.	DESCRIPTION	COMMENTS
1	F200204	Hose Clamp	No. 20
2	F150352	Overflow Plug	
3	F150343	Rear Pump Drain Hose	
4	F200401P	U-Bolt Clamp	Includes nuts
5	F603827-1	Pipe	
6	F604147	Pump Drain Rear Connecting Bracket	
7	F430910	Screw	
8	C000203	Transformer	VC and VX models; PN and SN models B, O and Y-voltage; PN and SN models through 7/1/04 F and H-voltage; VN models O and Y-voltage; VN models through 8/1/04 B, F and H-voltage
	F360156P	Transformer	PN and SN models starting 7/2/04 F and H-voltage; VN models starting 8/2/04 B, F and H-voltage
9	F430107	Screw	
10	F200167700	Transformer Mounting Bracket	
11	F430215	Nut	
12	F430217	Nut	
13	F430107	Screw	
14	F430215	Nut	
15	N/A	Hose	
16	F270119P	Drain Pump	120 Volt
	F200000900P	Pump	220 Volt/60 Hertz
	F270104P	Pump	220 Volt/50 Hertz
17	F430519	Screw	
18	F609748-5	Hose	
19	F609694	Pump Drain Trap Mounting Bracket	
20	F150443	Plug	
21	F200213	Hose Clamp	No. 40
22	F606192-5	Tubing	
23	901690	Washer	
24	F200217	Hose Clamp	
25	F630326P	Pump Drain Trap Assembly	Includes items 20-24

N/A = Part no longer available

© Copyright, Alliance Laundry Systems LLC – DO NOT COPY or TRANSMIT

Door (Drawing 1 of 2)

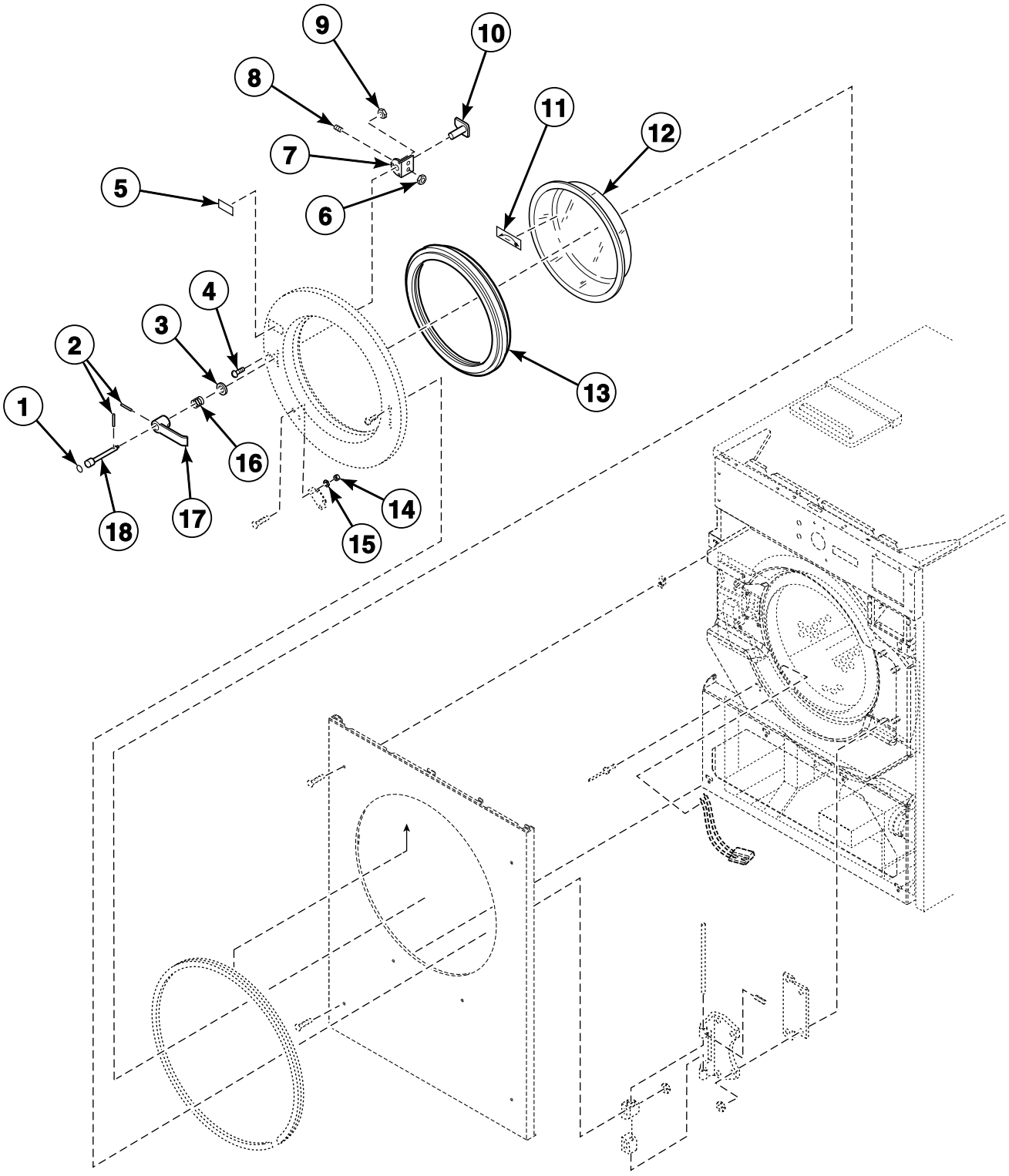

CHM3020P_F232190

© Copyright, Alliance Laundry Systems LLC – DO NOT COPY or TRANSMIT

Door (Drawing 1 of 2)

REF	PART NO.	DESCRIPTION	COMMENTS
1	F230662	Red Dot Decal	
2	F431222	Spring Pin	
3	F431916	Washer	
4	F8535601	Screw	
5	F230661	Push Red Button Decal	
6	F431041	Nut	
7	F0150273-00	Door Spacer	
8	F430532	Screw	HC20, HC25, SC20 and UC20 models
	F430533	Screw	HC30, HC40, HC50, HC60, SC30, SC40, SC50, SC60, UC30, UC40, UC50 and UC60 models
9	F430232	Nut	
10	F730155	Door Handle Kit	Includes items 1, 2, 7 and 16-18
11	F230693	Counterclockwise Spin Rotation Decal	English
	F230914	Spin Rotation Decal	Universal
12	F290205P	Door Glass Kit	HC20, HC25, SC20 and UC20 models
	F8485301P	Door Glass	HC30, SC30 and UC30 models
	F8485401P	Door Glass	HC40, HC50, HC60, SC40, SC50, SC60, UC40, UC50 and UC60 models
13	F200000200	Door Gasket	HC20, HC25, SC20 and UC20 models; Gray
	F200000202	Door Gasket	HC20, HC25, SC20 and UC20 models; Black
	F170123	Door Gasket	HC30, SC30 and UC30 models; Gray
	F017012302	Door Gasket	HC30, SC30 and UC30 models; Black
	F170124	Door Gasket	HC40, HC50, HC60, SC40, SC50, SC60, UC40, UC50 and UC60 models; Gray
	F017012402	Door Gasket	HC40, HC50, HC60, SC40, SC50, SC60, UC40, UC50 and UC60 models; Black
14	F431022	Nut	
15	F431113	Washer	
16	F310125	Door Lock Spring	
17	F150225	Door Handle	
18	F320300	Pushbutton Rod	

© Copyright, Alliance Laundry Systems LLC – DO NOT COPY or TRANSMIT

Door (Drawing 2 of 2)

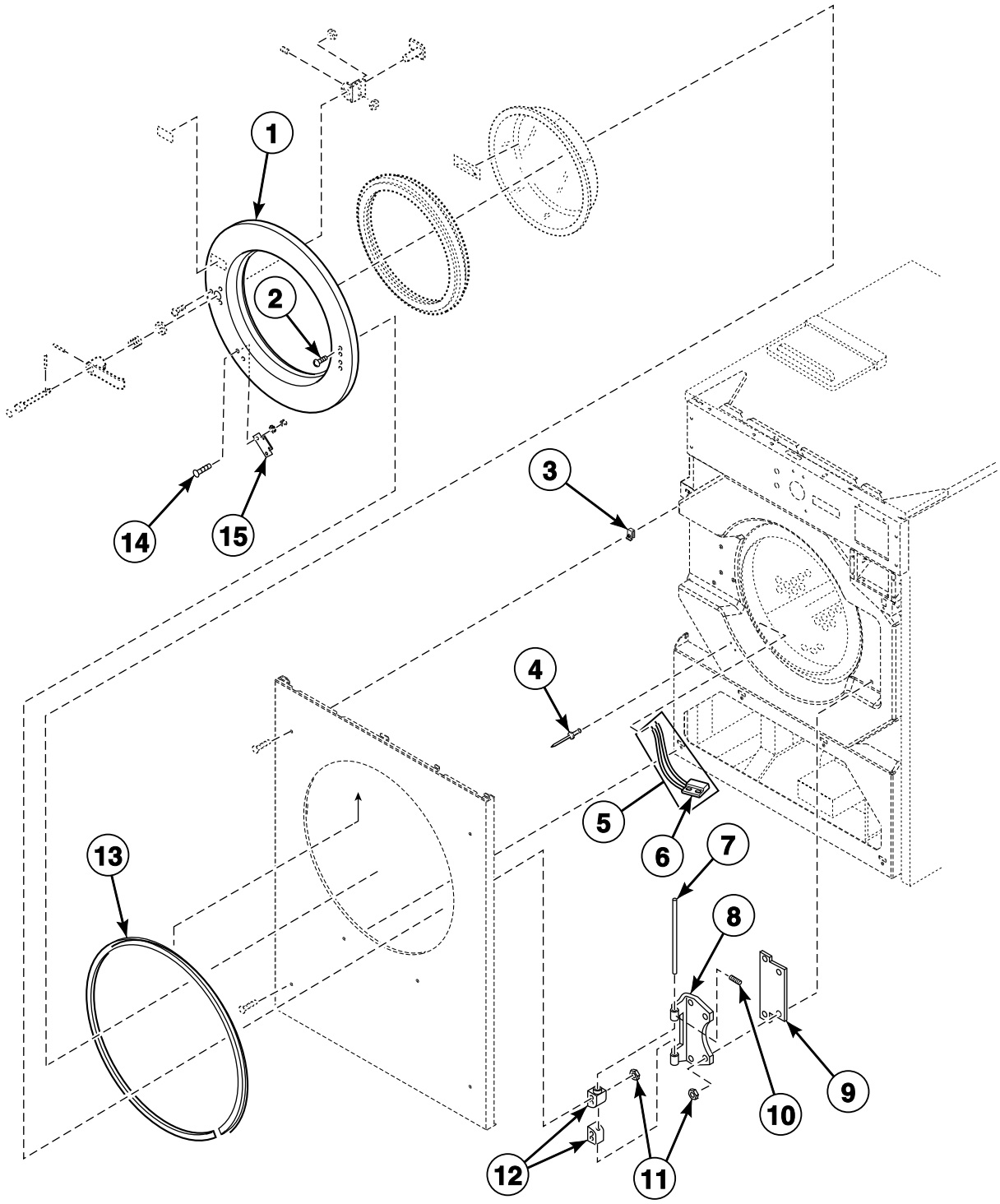

© Copyright, Alliance Laundry Systems LLC – DO NOT COPY or TRANSMIT

Door (Drawing 2 of 2)

REF	PART NO.	DESCRIPTION	COMMENTS
	F604079-4	Door Assembly	HC20 and HC25 VC and VX models; Includes items 1-2, 6-7, 9-11 and items 1-18 on *Door (Drawing 1 of 2)*; Gray door gasket
	F8150301	Door Assembly	HC20 and HC25 VC and VX models; Includes items 1-2, 6-7, 9-11 and items 1-18 on *Door (Drawing 1 of 2)*; Black door gasket
	F604079-5	Door Assembly	HC20, SC20 and UC20 PN, SN and VN models; Includes items 1-2, 6-7, 9-11 and items 1-18 on *Door (Drawing 1 of 2)*; Gray door gasket
	F603239-4	Door Assembly	Models HC30VC2 and HC30VX2; Includes items 1-2, 6-7, 9-11 and items 1-18 on *Door (Drawing 1 of 2)*; Gray
	F8150401	Door Assembly	Models HC30VC2 and HC30VX2; Includes items 1-2, 6-7, 9-11 and items 1-18 on *Door (Drawing 1 of 2)*; Black door gasket
	F060323905	Door Assembly	HC30, SC30 and UC30 PN, SN and VN models; Includes items 1-2, 6-7, 9-11 and items 1-18 on *Door (Drawing 1 of 2)*; Gray door gasket
	F603901-4	Door Assembly	HC40, HC50 and HC60 VC and VX models; Includes items 1-2, 6-7, 9-11 and items 1-18 on *Door (Drawing 1 of 2)*; Gray door gasket
	F8150501	Door Assembly	HC40, HC50 and HC60 VC and VX models; Includes items 1-2, 6-7, 9-11 and items 1-18 on *Door (Drawing 1 of 2)*; Black door gasket
	F060390105	Door Assembly	HC40, HC50, HC60, SC40, SC50, SC60, UC40, UC50 and UC60 PN, SN and VN models; Includes items 1-2, 6-7, 9-11 and items 1-18 on *Door (Drawing 1 of 2)*; Gray door gasket
1	N/A	Door	HC20, HC25 and SC20 models
	F602837-1	Door	HC30 and SC30 models
	F602842-2	Door	HC40, HC50, HC60, SC40, SC50 and SC60 models
2	F430969	Bolt	
3	F430264	Nut	Tinnerman
4	F8245101	Blind Rivet	Models starting 8/11/08
	J1111905	Blind Rivet	Models through 8/10/08
5	F8746601	Magnetic Switch Assembly	Includes item 6
6	F0340723-00	Magnetic Switch	
7	F602813-2	Rod	HC20, HC25, HC30, SC20, SC30, UC20 and UC30 models
	F602813-3	Rod	HC40, HC50, HC60, SC40, SC50, SC60, UC40, UC50 and UC60 models
8	F190216P	Door Hinge	
9	F200131000P	Door Hinge Shim Kit	As required
10	F430536	Screw	
11	F430215	Nut	
12	F150271	Door Mount	
13	F8679201P	Trim	Models through 4/29/08; F8142701 Adhesive required for installation
14	F430916	Screw	
15	F8390801	Magnet	PN, SN and VN models; CE coin models

N/A = Part no longer available

© Copyright, Alliance Laundry Systems LLC – DO NOT COPY or TRANSMIT

Door Lock - VC and VX Models

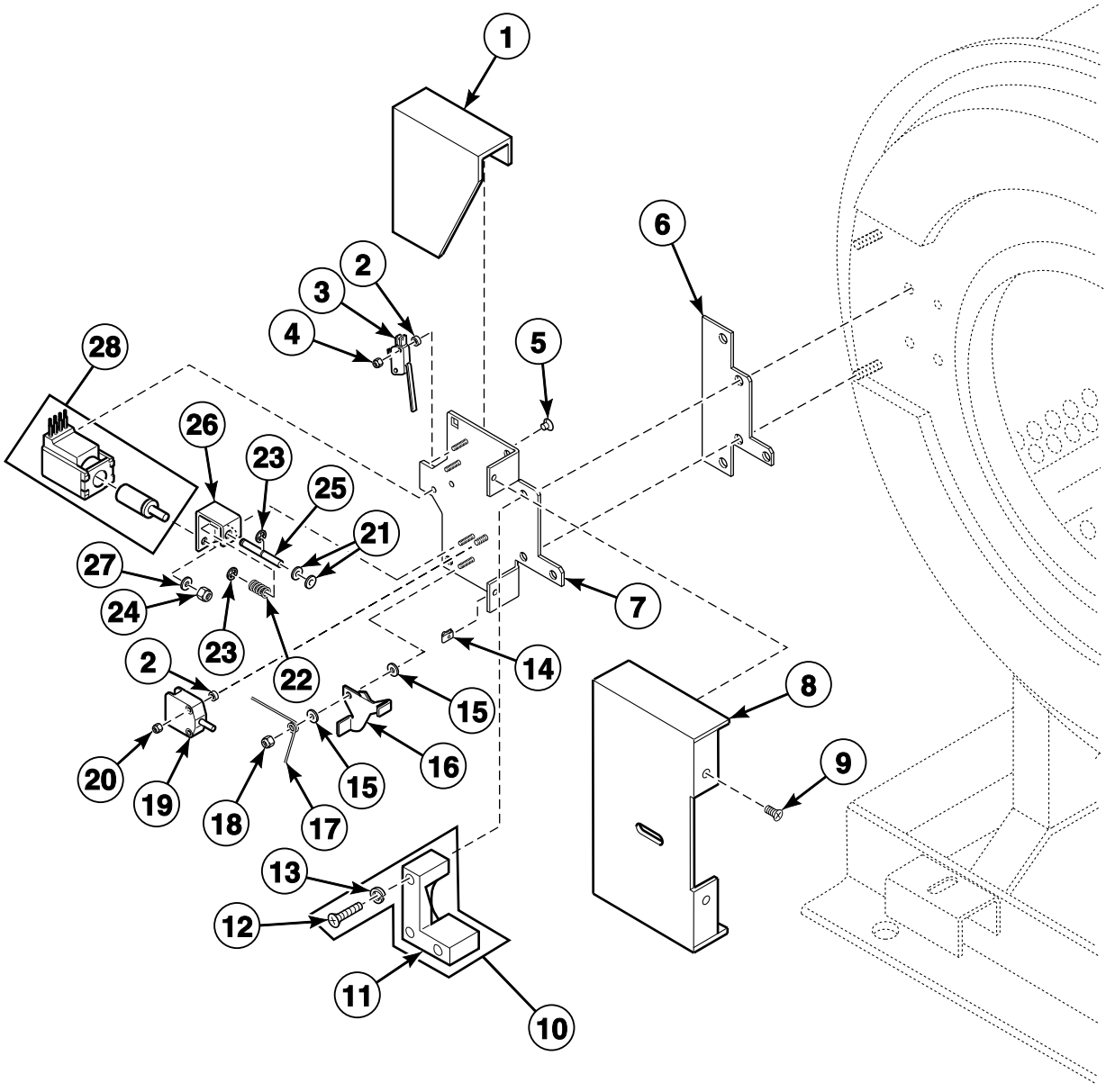

CHM2878P_F232190

© Copyright, Alliance Laundry Systems LLC – DO NOT COPY or TRANSMIT

Door Lock - VC and VX Models

REF	PART NO.	DESCRIPTION	COMMENTS
	F0636698-05P	Door Lock Assembly	Standard models; Includes items 2-5, 7, 14-27 and the wire harness
	F0636698-04	Door Lock Assembly	Models with heat; Includes items 2-5, 7, 14-27 and the wire harness
1	F320200	Door Lock Splash Shield	
2	F431901	Spacer	Nylon
3	F200203200	Door Lock Microswitch	
4	F430225	Nut	Nylon
5	F430977	Screw	
6	F8059701	Door Lock Plate Shim	
7	F8066701	Door Lock Plate Assembly	
8	F603003	Door Lock Assembly Cover	
9	F430956	Screw	
10	F746808	L-Catch Kit	Includes items 11-13
11	F150261	Door Lock Catch Casting	
12	F430982	Screw	
13	F431100	Washer	
14	F430264	Nut	
15	F431902	Washer	Nylon
16	F0636636-00	Door Lock Switch Lever	
17	F310110	Door Lock Torsion Spring	
18	F430232	Nut	Nylon
19	F340200	Door Switch	
20	F430231	Nut	
21	F431147	Washer	
22	F310137	Door Lock Pin Release Spring	
23	F310205	E-Ring Retainer	
24	F431017	Nut	
25	F431231	Door Locking Linkage Pin	
26	F150455	Door Lock Pin Linkage	
27	F431123	Washer	
28	F300124P	Solenoid	Includes harness

© Copyright, Alliance Laundry Systems LLC – DO NOT COPY or TRANSMIT

Door Lock - PN, SN and VN Models

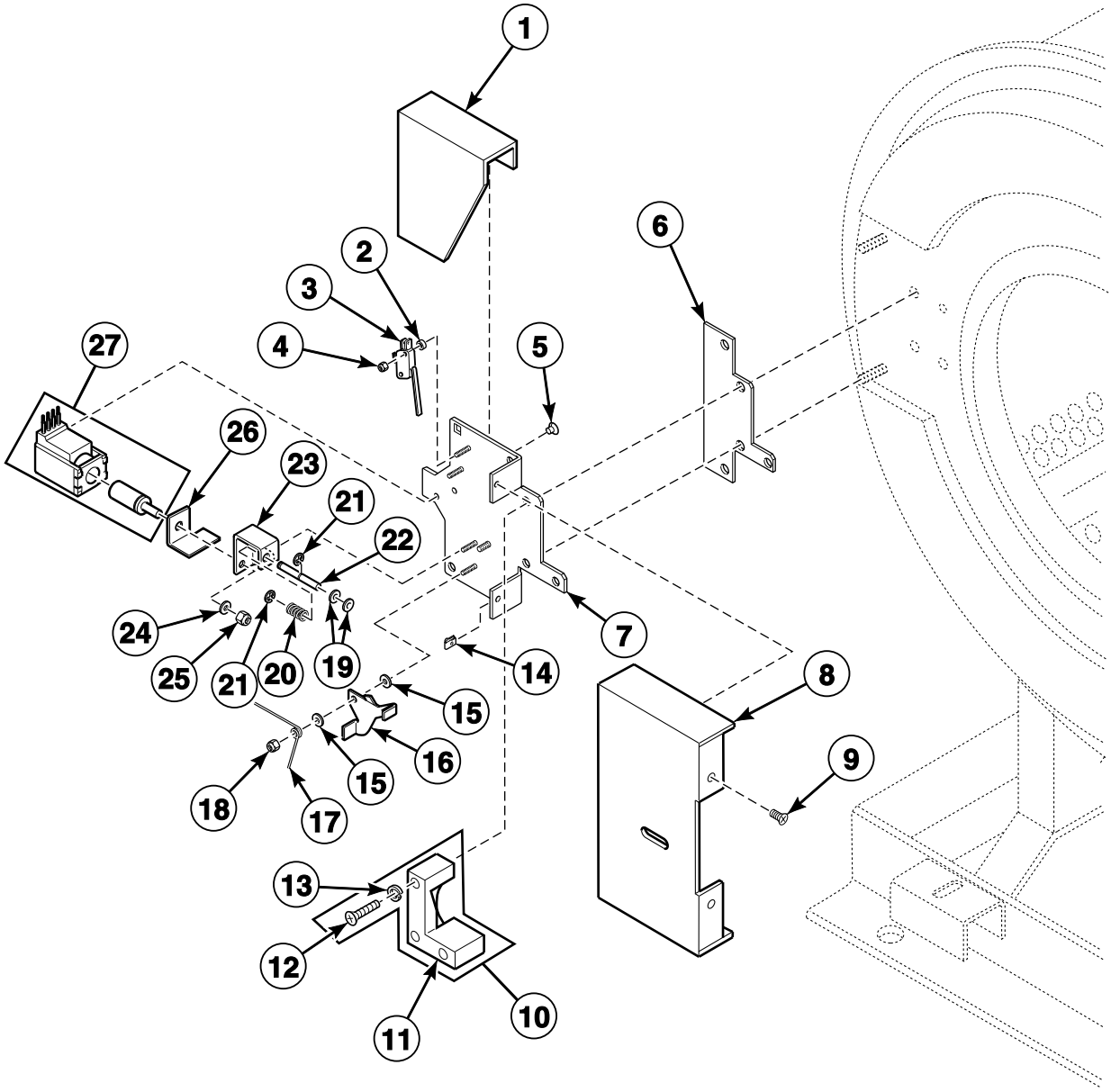

CHM2879P_F232190

© Copyright, Alliance Laundry Systems LLC – DO NOT COPY or TRANSMIT

Door Lock - PN, SN and VN Models

REF	PART NO.	DESCRIPTION	COMMENTS
	F0798839-00	Door Lock Kit	PN and SN models B-voltage; PN and SN models through 7/21/04 F, H, O and Y-voltage; VN models through 8/1/04 B, F, H, O and Y-voltage; Includes items 2-5, 7 and 14-27
	F0798839-01	Door Lock Kit	PN and SN models C, D, E and J-voltage; PN and SN models starting 7/22/04 F, H, O and Y-voltage; VN models through 8/1/04 C, D, E, and J-voltage; Includes items 2-5, 7 and 14-27
	F340200	Door Switch	VN models starting 8/2/04
	F200136800P	Door Lock Assembly	VN models starting 8/2/04 B, D, E, F, H, J, O and Y-voltage; Includes items 2-5, 7, 14-27 and the wire harness
	F200136801	Door Lock Assembly	VN models starting 8/2/04 C-voltage; Includes items 2-5, 7, 14-27 and the wire harness
1	F320200	Door Lock Splash Shield	
2	F431901	Spacer	Nylon
3	F200203200	Door Lock Microswitch	
4	F430225	Nut	Nylon
5	F430977	Screw	
6	F8059701	Door Lock Plate Shim	
7	F8066701	Door Lock Plate Assembly	
8	F603003	Door Lock Assembly Cover	
9	F430956	Screw	
10	F746808	L-Catch Kit	Includes items 11-13
11	F150261	Door Lock Catch Casting	
12	F430982	Screw	
13	F431100	Washer	
14	F430264	Nut	
15	F431902	Washer	
16	F0636636-00	Door Lock Switch Lever	
17	F310110	Door Lock Torsion Spring	
18	F430232	Nut	Nylon
19	F431147	Washer	
20	F310137	Door Lock Pin Release Spring	
21	F310205	E-Ring Retainer	
22	F431231	Door Locking Linkage Pin	
23	F150455	Door Lock Pin Linkage	
24	F431017	Nut	
25	F431123	Washer	
26	F0636103-00	Door Lock Retainer Latch	
27	F300128P	Door Release Solenoid	120 Volt
	F0300131-00P	Door Lock Solenoid	220 Volt

© Copyright, Alliance Laundry Systems LLC – DO NOT COPY or TRANSMIT

Inner and Outer Front Panels - PN, SN and VN Models

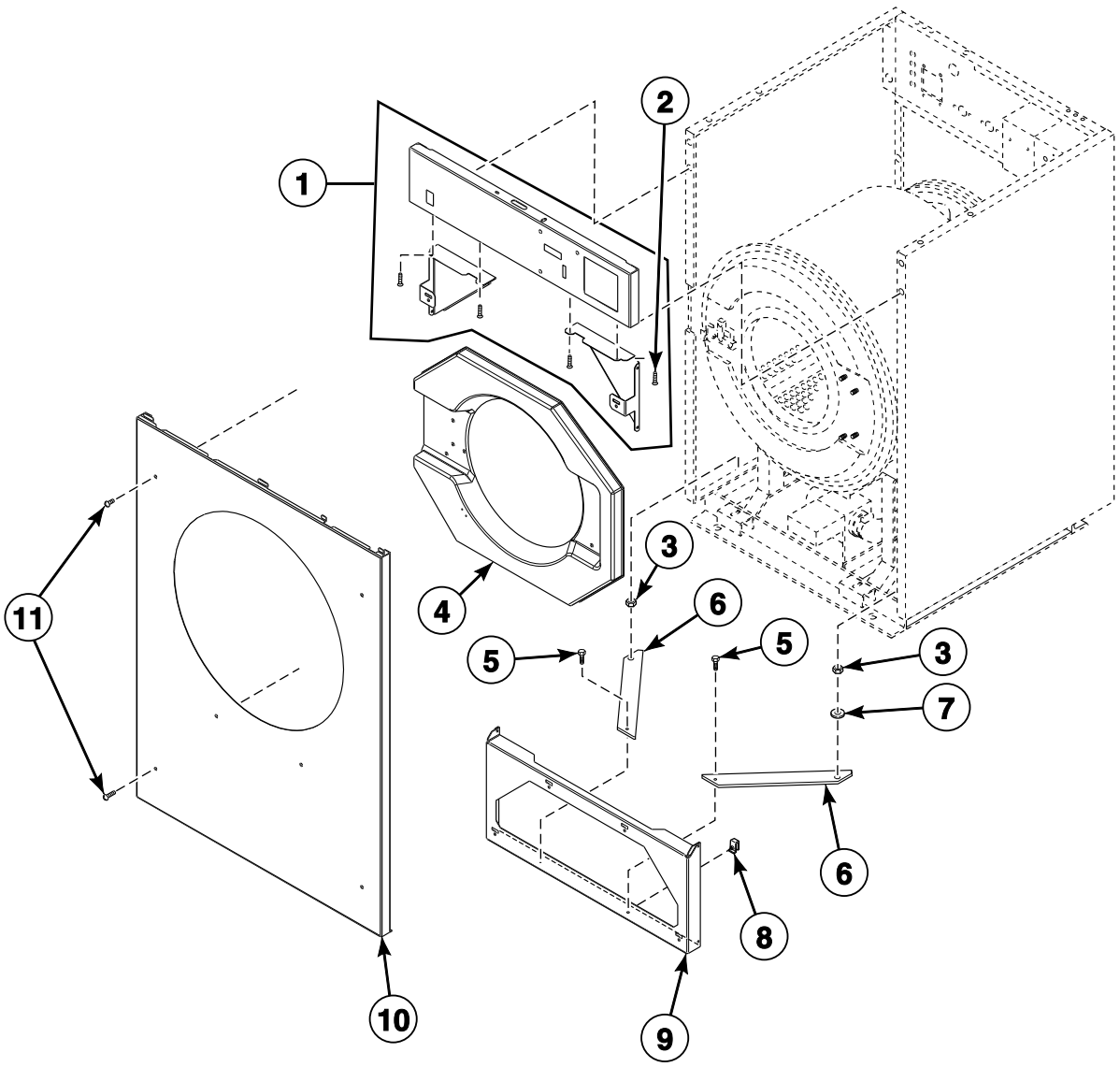

CHM2945P_F232190

© Copyright, Alliance Laundry Systems LLC – DO NOT COPY or TRANSMIT

Inner and Outer Front Panels - PN, SN and VN Models

REF	PART NO.	DESCRIPTION	COMMENTS
1	F0636894-01	Control Panel Assembly	Models HC20SN2, SC20VN2, UC20PN2 and UC20VN2
	F0636896-01	Control Panel Assembly	Models HC30SN2, SC30VN2, UC30PN2 and UC30VN2
	F0636810-01	Control Panel Assembly	Models HC40SN2, SC40VN2, UC40PN2 and UC40VN2
	F0636921-01	Control Panel Assembly	Models HC50SN2, HC60SN2, SC50VN2, SC60VN2, UC50PN2, UC50VN2, UC60PN2 and UC60VN2
2	F430137	Screw	
3	F430233	Nut	Models HC40SN2, SC40VN2, UC40PN2 and UC40VN2
4	F8658701	Door Bezel	Black; Models SC20VN2, UC20PN2 and UC20VN2
	F170416-2	Door Bezel	Pantone 403; Model HC20SN2
	F8658901	Door Bezel	Black; Models SC30VN2, UC30PN2 and UC30VN2
	F170417-2	Door Bezel	Pantone 403; Model HC30SN2
	F8659101	Door Bezel	Black; Models HC40SN2, HC50SN2, HC60SN2, SC40VN2, SC50VN2, SC60VN2, UC40PN2, UC40VN2, UC50PN2, UC50VN2, UC60PN2 and UC60VN2
5	F430174	Screw	Models HC40SN2, SC40VN2, UC40PN2 and UC40VN2
6	F200168900	Cabinet Corner Stiffener	Models HC40SN2, SC40VN2, UC40PN2 and UC40VN2
7	M405535	Washer	Models HC40SN2, SC40VN2, UC40PN2 and UC40VN2
8	F430264	Nut	
9	F634800	Cabinet Brace	Models HC20SN2, SC20VN2, UC20PN2 and UC20VN2
	F634801	Cabinet Brace	Models HC30SN2, SC30VN2, UC30PN2 and UC30VN2
	F0636217-00	Cabinet Brace	Models HC40SN2, SC40VN2, UC40PN2 and UC40VN2
	F634803P	Cabinet Brace	Models HC50SN2, HC60SN2, SC50VN2, SC60VN2, UC50PN2, UC50VN2, UC60PN2 and UC60VN2
10	F8200302P	Front Panel	Stainless steel; Models HC20SN2, SC20VN2, UC20PN2 and UC20VN2
	N/A	Front Panel	Almond; Models HC20SN2, SC20VN2, UC20PN2 and UC20VN2
	F8200402P	Front Panel	Stainless steel; Models HC30SN2, SC30VN2, UC30PN2 and UC30VN2
	F634666-2	Front Panel	Almond; Models HC30SN2, SC30VN2, UC30PN2 and UC30VN2
	F8200502P	Front Panel	Models HC40SN2, SC40VN2, UC40PN2 and UC40VN2
	F8200602P	Front Panel	Stainless steel; Models HC50SN2, HC60SN2, SC50VN2, SC60VN2, UC50PN2, UC50VN2, UC60PN2 and UC60VN2
	F8200602P	Front Panel	Almond; Models HC50SN2, HC60SN2, SC50VN2, SC60VN2, UC50PN2, UC50VN2, UC60PN2 and UC60VN2
11	F430956	Screw	

N/A = Part no longer available

© Copyright, Alliance Laundry Systems LLC – DO NOT COPY or TRANSMIT

Inner and Outer Front Panels - VC and VX Models

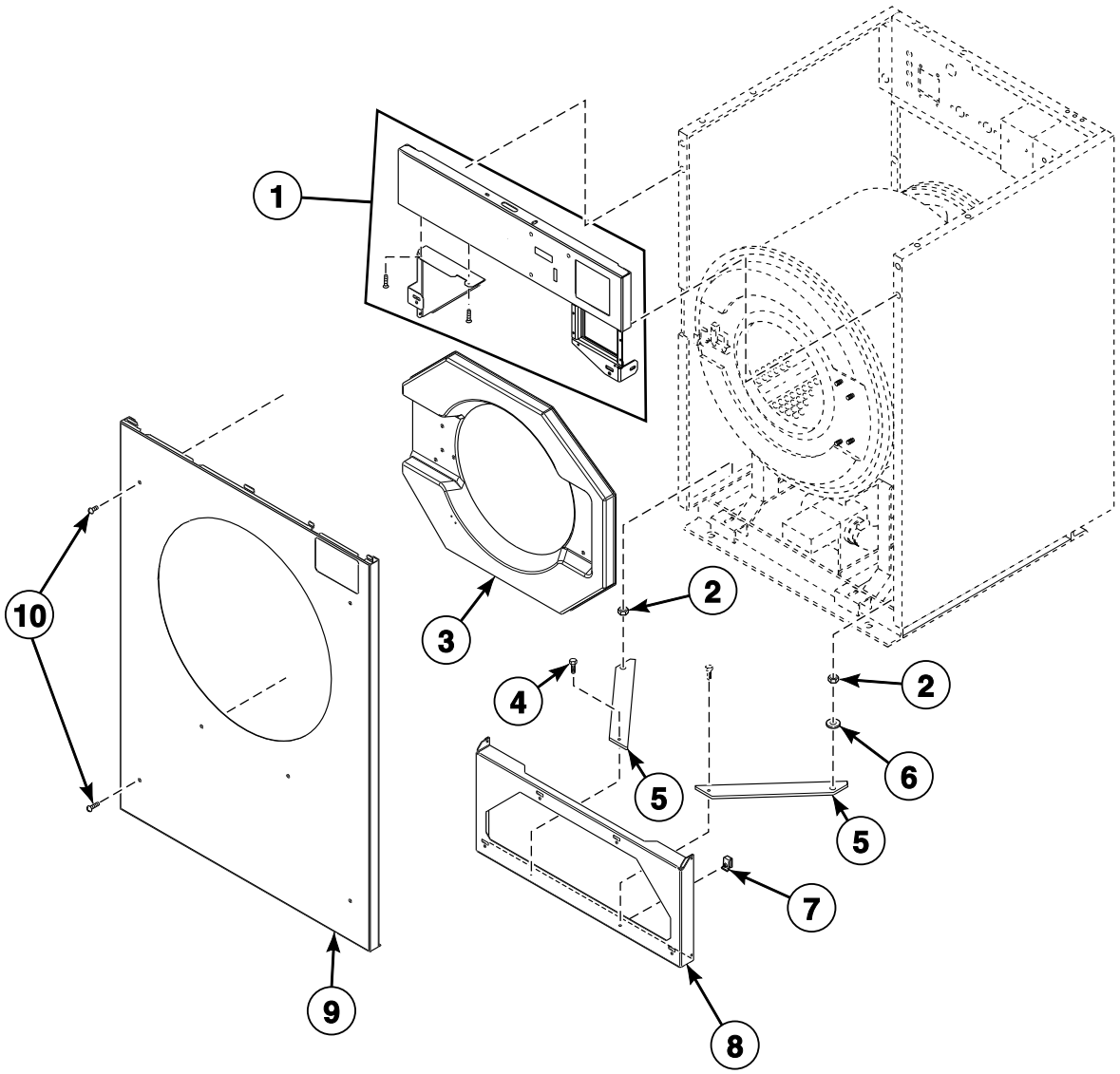

CHM2946P_F232190

© Copyright, Alliance Laundry Systems LLC – DO NOT COPY or TRANSMIT

Inner and Outer Front Panels - VC and VX Models

REF	PART NO.	DESCRIPTION	COMMENTS
1	F0636894-00	Control Panel Assembly	Models HC20VC2, HC20VX2, HC25VC2 and HC25VX2
	F0636896-00	Control Panel Assembly	Models HC30VC2 and HC30VX2
	N/A	Control Panel Assembly	Models HC40VC2 and HC40VX2
	F0636921-00	Control Panel Assembly	Models HC50VC2, HC50VX2, HC60VC2 and HC60VX2
2	F430233	Nut	Models HC40VC2 and HC40VX2
3	F170416-2	Door Bezel	Pantone; Models HC20VC2, HC20VX2, HC25VC2 and HC25VX2
	F170417-2	Door Bezel	Pantone; Models HC30VC2, HC30VX2, HC40VC2 and HC40VX2
	F8659101	Door Bezel	Pantone; Models HC50VC2, HC50VX2, HC60VC2 and HC60VX2
4	F430174	Screw	Models HC40VC2 and HC40VX2
5	F200168900	Cabinet Corner Stiffener	Models HC40VC2 and HC40VX2
6	M405535	Washer	Models HC40VC2 and HC40VX2
7	F430264	Nut	
8	F634800	Cabinet Brace	Models HC20VC2, HC20VX2, HC25VC2 and HC25VX2
	F634801	Cabinet Brace	Models HC30VC2 and HC30VX2
	F0636217-00	Cabinet Brace	Models HC40VC2 and HC40VX2
	F634803P	Cabinet Brace	Models HC50VC2, HC50VX2, HC60VC2 and HC60VX2
9	F8200301P	Front Panel	Stainless steel; Models HC20VC2 and HC20VX2
	F634682-2	Front Panel	Almond; Models HC20VC2 and HC20VX2
	F634836-1P	Front Panel	Stainless steel; Models HC25VC2 and HC25VX2
	F634836-2	Front Panel	Almond; Models HC25VC2 and HC25VX2
	F8200401P	Front Panel	Stainless steel; Models HC30VC2 and HC30VX2
	N/A	Front Panel	Almond; Models HC30VC2 and HC30VX2
	F8200501P	Front Panel	Models HC40VC2 and HC40VX2; Stainless steel
	F8200601P	Front Panel	Stainless steel; Models HC50VC2, HC50VX2, HC60VC2 and HC60VX2
	N/A	Front Panel	Almond; Models HC50VC2, HC50VX2, HC60VC2 and HC60VX2
10	F430956	Screw	

N/A = Part no longer available

© Copyright, Alliance Laundry Systems LLC – DO NOT COPY or TRANSMIT

Panels (Drawing 1 of 2)

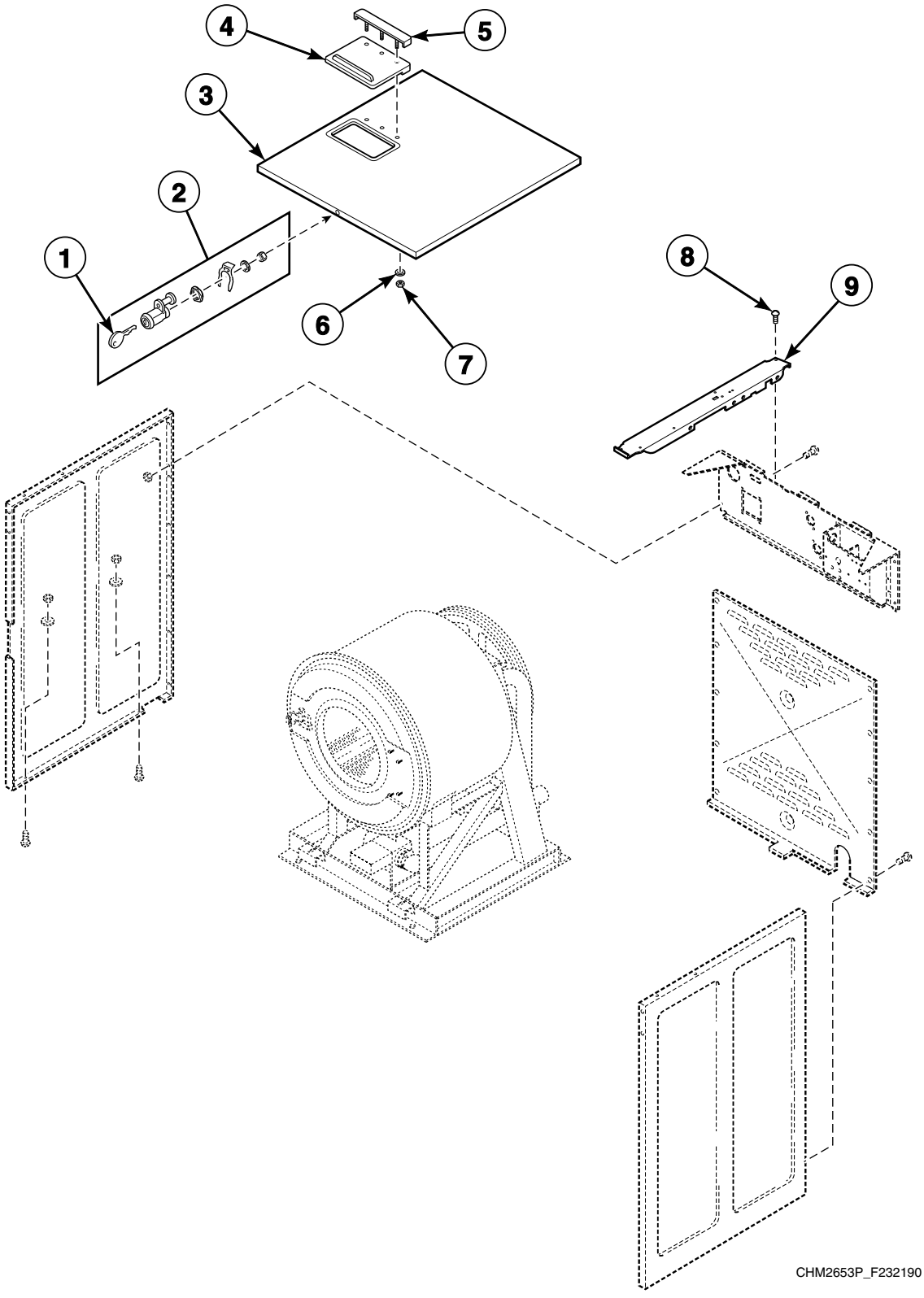

© Copyright, Alliance Laundry Systems LLC – DO NOT COPY or TRANSMIT

Panels (Drawing 1 of 2)

REF	PART NO.	DESCRIPTION	COMMENTS
1	70155603	Key	
2	F0190808-00P	Lid Lock Pin	
3	F063618900P	Top Cover Assembly	HC20, SC20 and UC20 models; Includes items 1, 2 and 4-7
	F063659800P	Top Cover Assembly	Models HC25VC2 and HC25VX2; Includes items 1, 2 and 4-7
	F063652000P	Top Cover Assembly	HC30, SC30 and UC30 models; Includes items 1, 2 and 4-7
	F063664000P	Top Cover Assembly	HC40, SC40 and UC40 models; Includes items 1, 2 and 4-7
	F063632700	Top Cover Assembly	HC50, SC50 and UC50 models; Includes items 1, 2 and 4-7
	F063771200P	Top Cover Assembly	HC60, SC60 and UC60 models; Includes items 1, 2 and 4-7
4	F200270500	Supply Dispenser Lid	Gray
5	F630430	Lid Clamp Assembly	
6	F431147	Washer	
7	F431024	Nut	
8	F430174	Screw	
9	F0636131-00	Cabinet Brace	HC20, SC20 and UC20 models
	F0636596-00	Cabinet Brace	Models HC25VC2 and HC25VX2
	F0636518-00	Cabinet Brace	HC30, SC30 and UC30 models
	F0636218-00	Cabinet Brace	HC40, SC40 and UC40 models
	F0636320-00	Cabinet Brace	HC50, SC50 and UC50 models
	F0637632-00	Cabinet Brace	HC60, SC60 and UC60 models

© Copyright, Alliance Laundry Systems LLC – DO NOT COPY or TRANSMIT

Panels (Drawing 2 of 2)

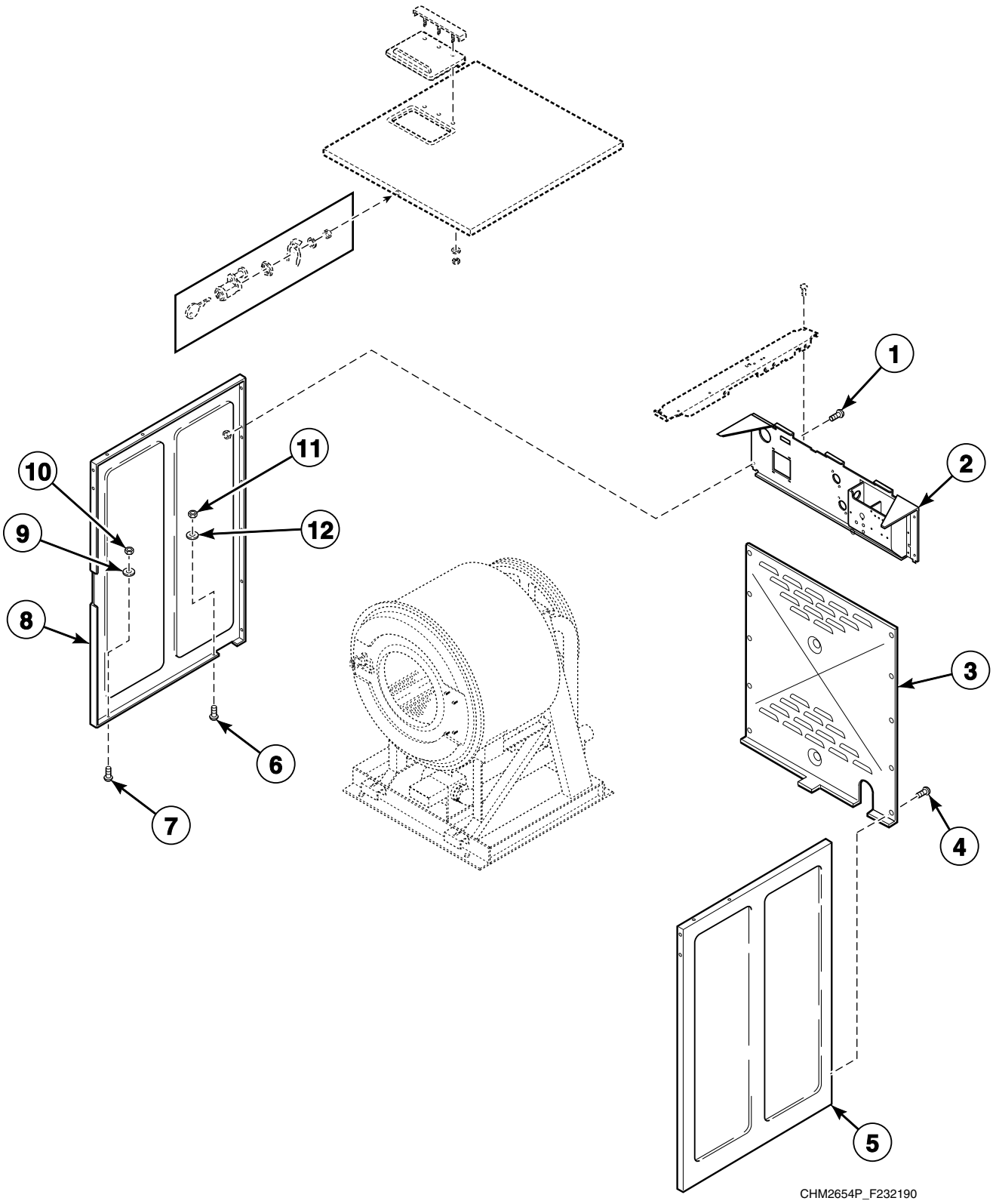

© Copyright, Alliance Laundry Systems LLC – DO NOT COPY or TRANSMIT

Panels (Drawing 2 of 2)

REF	PART NO.	DESCRIPTION	COMMENTS
1	F430925	Screw	
2	F0636138-00	Valve Panel Assembly	HC20, HC25, SC20 and UC20 models; Standard models
	F0636138-01	Valve Panel Assembly	HC20, HC25, SC20 and UC20 models; Models with heat
	F0636521-00	Valve Panel Assembly	HC30, SC30 and UC30 models; Standard models
	N/A	Valve Panel Assembly	HC30, SC30 and UC30 models; Models with heat
	F0636524-01	Valve Panel Assembly	HC40, SC40 and UC40 models; Standard models
	F0636524-03	Valve Panel Sub-Assembly	HC40, SC40 and UC40 models; Models with heat
	F0636297-00	Valve Panel Assembly	HC50, HC60, SC50, SC60, UC50 and UC60 models; Standard models
	F0636297-01	Valve Panel Assembly	HC50, HC60, SC50, SC60, UC50 and UC60 models; Models with heat
3	F757000	Rear Panel Kit	HC20, SC20 and UC20 models; Includes item 4
	F757001	Rear Panel Kit	HC25 models; Includes item 4
	F0636321-00P	Rear Panel	HC30, SC30 and UC30 models
	F0636220-00P	Rear Panel	HC40, SC40 and UC40 models
	F757002	Rear Panel Kit	HC50, SC50 and UC50 models; Includes item 4
	F200022900P	Rear Panel	HC60, SC60 and UC60 models
4	F430174	Screw	
5	F0636135-00P	Right Side Panel	HC20, SC20 and UC20 models; Stainless steel
	F0636594-00P	Right Side Panel	Models HC25VC2 and HC25VX2; Stainless steel
	F0636515-00P	Side Panel	Right; HC30, SC30 and UC30 models; Stainless steel
	F0635981-00P	Side Panel	Right; HC40, SC40 and UC40 models; Stainless steel
	F0636300-00P	Side Panel	Right; HC50, SC50 and UC50 models; Stainless steel
	F0637630-00P	Side Panel	Right; HC60, SC60 and UC60 models; Stainless steel
	F8157301P	Right Side Panel	HC20, SC20 and UC20 models; Vinyl
	F8156601	Right Side Panel	Models HC25VC2 and HC25VX2; Vinyl
	F8155501P	Right Side Panel	HC30, SC30 and UC30 models; Vinyl
	F8155701P	Right Side Panel	HC40, SC40 and UC40 models; Vinyl
	F8160001	Right Side Panel	HC50, SC50 and UC50 models; Vinyl
	F8160301P	Right Side Panel	HC60, SC60 and UC60 models; Vinyl
6	M400056	Screw	
7	F430107	Screw	
8	F0636136-00P	Left Side Panel	HC20, SC20 and UC20 models
	F0636595-00P	Left Side Panel	Models HC25VC2 and HC25VX2
	F0636516-00P	Side Panel	Left; HC30, SC30 and UC30 models
	F0635982-00P	Side Panel	Left; HC40, SC40 and UC40 models
	F0636299-00	Side Panel	Left; HC50, SC50 and UC50 models
	F0637628-00P	Side Panel	Left; HC60, SC60 and UC60 models
	F8157401P	Left Side Panel	HC20, SC20 and UC20 models; Vinyl
	F8156701	Left Side Panel	Models HC25VC2 and HC25VX2; Vinyl
	F8155601P	Left Side Panel	HC30, SC30 and UC30 models; Vinyl
	F8155901P	Left Side Panel	HC40, SC40 and UC40 models; Vinyl
	F8159901	Left Side Panel	HC50, SC50 and UC50 models; Vinyl
	F8160101P	Left Side Panel	HC60, SC60 and UC60 models; Vinyl
9	F0430348-00	Washer	
10	F431024	Nut	
11	F430233	Nut	
12	M405535	Washer	

N/A = Part no longer available

© Copyright, Alliance Laundry Systems LLC – DO NOT COPY or TRANSMIT

Basket, Shell and Frame (Drawing 1 of 2)

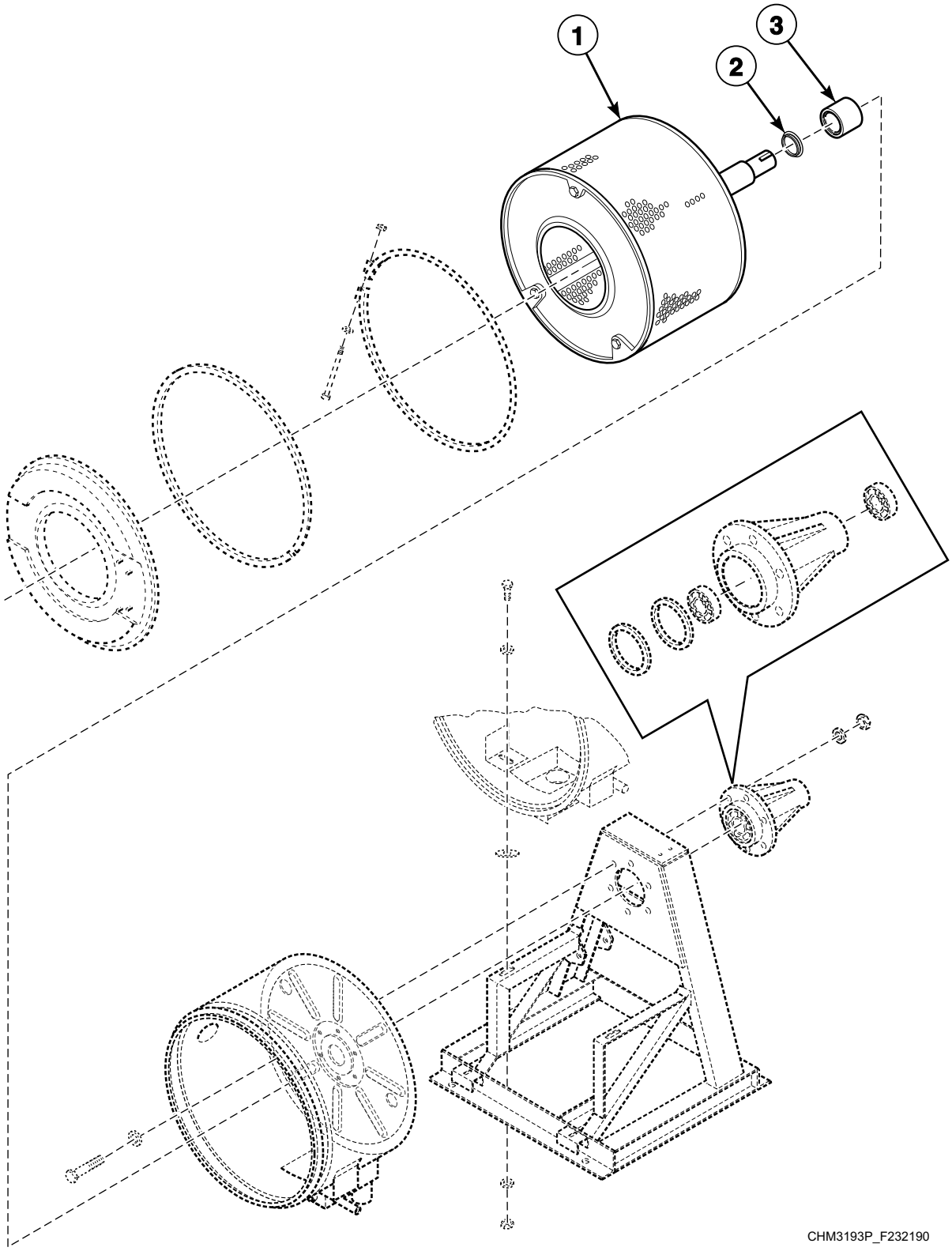

© Copyright, Alliance Laundry Systems LLC – DO NOT COPY or TRANSMIT

Basket, Shell and Frame (Drawing 1 of 2)

REF	PART NO.	DESCRIPTION	COMMENTS
	389P4	Basket Tool Kit	Purchase; Requires F460129P Bearing Puller Tool
	390P4P	Basket Rental Tool Kit	Requires F460129P Bearing Puller Tool
1	F935P3	Pressfit Upgrade Kit	HC20, SC20 and UC20 models; Models that have not been upgraded with F935P3 Pressfit Upgrade Kit; Includes items 2 and 3, F8347801 Basket Assembly and F747001 Trunnion Kit
	F8391301P	Basket Assembly	HC20, SC20 and UC20 models; Models that have been upgraded with F935P3 Pressfit Upgrade Kit; Includes items 2 and 3
	F8391305P	Basket Assembly	Models HC25VC2 and HC25VX2; Includes item 3
	F936P3	Pressfit Upgrade Kit	HC30, SC30 and UC30 models; Includes items 2 and 3, F8347901 Basket Assembly and F747002 Trunnion Kit
	F8347901P	Basket Assembly	HC30, SC30 and UC30 models; Models that have been upgraded with F936P3 Pressfit Upgrade Kit; Includes items 2 and 3
	F938P3	Pressfit Upgrade Kit	HC40, SC40 and UC40 models; Includes items 2 and 3, F8336301P Basket Assembly and F747003 Trunnion Kit
	F8391701P	Basket Assembly	HC40, SC40 and UC40 models; Models that have been upgraded with F938P3 Pressfit Upgrade Kit; Includes items 2 and 3
	F942P3	Pressfit Upgrade Kit	HC50, SC50 and UC50 models; Includes items 2 and 3, F8338401 Basket Assembly and F747005 Trunnion Kit; Replaces F603900-1 Basket Assembly
	F8502803	Basket Assembly	HC50, SC50 and UC50 models; Models that have been upgraded with F942P3 Pressfit Upgrade Kit; Includes items 2 and 3; Replaces F8438401 Basket Assembly
	F603900-1	Basket Assembly	HC50, SC50 and UC50 models; Includes item 3
	F939P3	Pressfit Upgrade Kit	HC60, SC60 and UC60 models; Includes items 2 and 3, F8336501P Basket Assembly and F747005 Trunnion Kit
	F8502801P	Basket Assembly	HC60, SC60 and UC60 models; Models that have been upgraded with F939P3 Pressfit Upgrade Kit; Includes items 2 and 3
2	F8336801	Excluder Seal	HC20, SC20 and UC20 models; Models that have been upgraded with F935P3 Pressfit Upgrade Kit
	F8336901	Excluder Seal	HC30, SC30 and UC30 models; Models that have been upgraded with F936P3 Pressfit Upgrade Kit
	F8337001	Excluder Seal	HC40, SC40 and UC40 models; Models that have been upgraded with F938P3 Pressfit Upgrade Kit
	F8337101	Excluder Seal	HC60, SC60 and UC60 models; Models that have been upgraded with F939P3 Pressfit Upgrade Kit
3	F8312001P	Shaft Seal Sleeve	HC20, SC20 and UC20 models starting 11/7/06 that have not been upgraded with F935P3 Pressfit Upgrade Kit; Models HC25VC2 and HC25VX2
	F8312002P	Shaft Seal Sleeve	HC20, SC20 and UC20 models; Models through 11/6/06 that have not been upgraded with F935P3 Pressfit Upgrade Kit
	F8343901P	Shaft Seal Sleeve Kit	HC20, SC20 and UC20 models; Models that have been upgraded with F935P3 Pressfit Upgrade Kit
	F8312004P	Shaft Seal Sleeve	HC30, SC30 and UC30 models; Models that have not been upgraded with F936P3 Pressfit Upgrade Kit
	F8343904P	Shaft Seal Sleeve Kit	HC30, SC30 and UC30 models; Models that have been upgraded with F936P3 Pressfit Upgrade Kit
	F8312003P	Shaft Seal Sleeve	HC40, SC40 and UC40 models; Models through 10/14/07 that have not been upgraded with F938P3 Pressfit Upgrade Kit
	F8312005P	Shaft Seal Sleeve	HC40, SC40 and UC40 models; Models starting 10/15/07 through 3/31/08 that have not been upgraded with F938P3 Pressfit Upgrade Kit
	F8312006P	Shaft Seal Sleeve	HC40, SC40 and UC40 models; Models starting 4/1/08 that have not been upgraded with F938P3 Pressfit Upgrade Kit
	F8343906P	Shaft Seal Sleeve Kit	HC40, SC40 and UC40 models; Models that have been upgraded with F938P3 Pressfit Upgrade Kit
	F8312008P	Shaft Seal Sleeve	HC50, SC50 and UC50 models; Models that have not been upgraded with F942P3 Pressfit Upgrade Kit
	F8343914	Shaft Seal Sleeve	HC50, SC50 and UC50 models; Models that have been upgraded with F942P3 Pressfit Upgrade Kit
	F8343909P	Shaft Seal Sleeve Kit	HC50, HC60, SC50, SC60, UC50 and UC60 models; Models that have been upgraded with F942P3 Pressfit Upgrade Kit

© Copyright, Alliance Laundry Systems LLC – DO NOT COPY or TRANSMIT

Basket, Shell and Frame (Drawing 2 of 2)

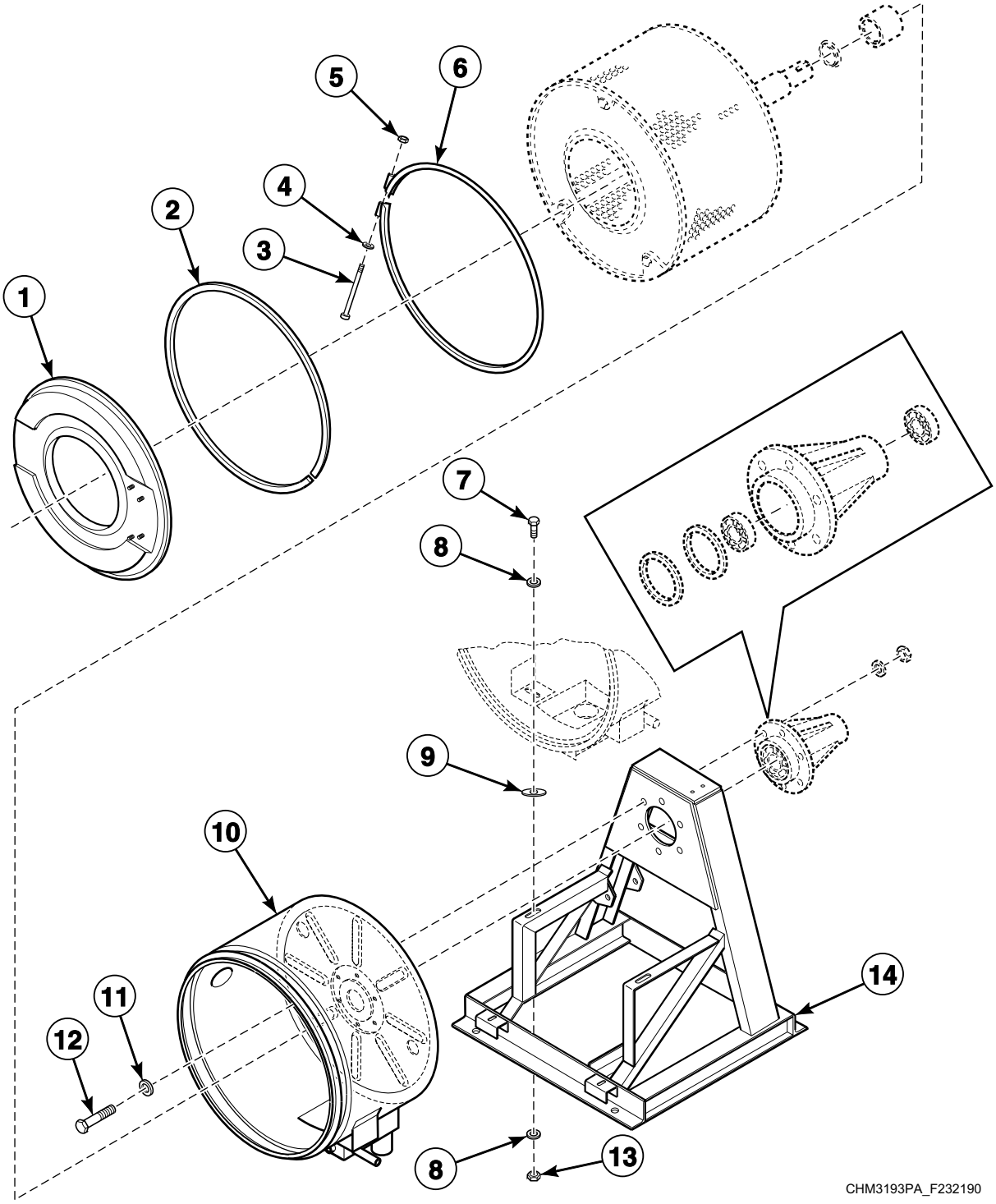

© Copyright, Alliance Laundry Systems LLC – DO NOT COPY or TRANSMIT

Basket, Shell and Frame (Drawing 2 of 2)

REF	PART NO.	DESCRIPTION	COMMENTS
1	F741300P	Shell Front Kit	HC20, HC25, SC20 and UC20 models; Includes items 2-6
	F632006P	Shell Front Assembly	HC30, SC30 and UC30 models
	F0636283-00P	Shell Front Assembly	HC40, SC40 and UC40 models
	F741302-01	Shell Front Kit	HC50, HC60, SC50, SC60, UC50 and UC60 models; Includes items 2-6
2	F792000	Shell Front Gasket Kit	
3	F430518	Screw	
4	F430317	Washer	
5	F430215	Nut	
6	F8537801	Shell Band Kit	HC20, HC25, SC20 and UC20 models; Includes items 3-5
	F8388002	Clamp Ring Assembly	HC30, SC30 and UC30 models; Includes items 3-5
	F8537803	Shell Band Kit	HC40, SC40 and UC40 models; Includes items 3-5
	F8537804	Shell Band Kit	HC50, HC60, SC50, SC60, UC50 and UC60 models; Includes items 3-5
7	F430942	Screw	
8	M400081	Washer	
9	F430303	Washer	
10	F0636388-00	Shell Weldment	HC20, SC20 and UC20 models; Standard
	F063659201	Shell Weldment	Models HC25VC2 and HC25VX2; Standard
	F0636555-00	Shell Weldment	HC30, SC30 and UC30 models; Standard
	F063597402P	Shell Weldment	HC40, SC40 and UC40 models; Models through 1/25/05; Standard
	F200195402	Shell Weldment	HC40, SC40 and UC40 models; Models starting 1/26/05; Standard
	F0636460-00	Shell Weldment	HC50, SC50 and UC50 models; Standard
	F0637659-00	Shell Weldment	HC60, SC60 and UC60 models; Standard
11	F431128	Washer	HC20, HC25, HC30, SC20, SC30, UC20 and UC30 models
	F431131	Washer	HC40, HC50, HC60, SC40, SC50, SC60, UC40, UC50 and UC60 models
12	F430949	Screw	HC20, HC25, HC30, SC20, SC30, UC20 and UC30 models
	F430987	Screw	HC40, HC50, HC60, SC40, SC50, SC60, UC40, UC50 and UC60 models
13	F430218	Nut	
14	F607003	Frame Assembly	HC20, SC20 and UC20 models
	F606178	Frame Assembly	Models HC25VC2 and HC25VX2
	F630232	Frame Assembly	HC30, SC30 and UC30 models
	F0636108-00	Frame Weldment	HC40, SC40 and UC40 models; Models through 1/25/05
	F200195300	Frame Weldment	HC40, SC40 and UC40 models; Models starting 1/26/05
	F607005	Frame Assembly	HC50, SC50 and UC50 models
	F0637645-00	Frame Assembly	HC60, SC60 and UC60 models

© Copyright, Alliance Laundry Systems LLC – DO NOT COPY or TRANSMIT

Trunnion - 20, 25 and 30 Pound Models

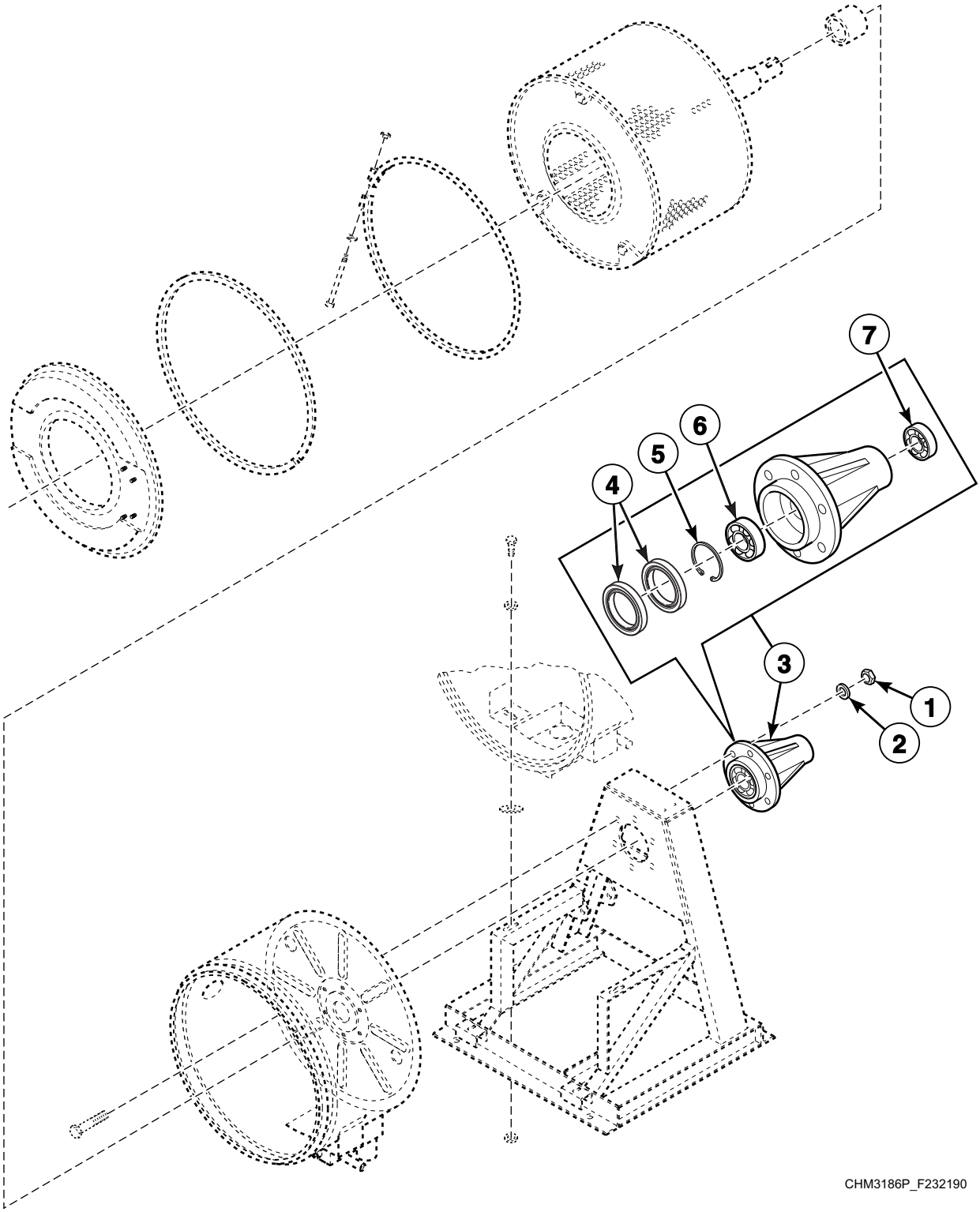

© Copyright, Alliance Laundry Systems LLC – DO NOT COPY or TRANSMIT

Trunnion - 20, 25 and 30 Pound Models

REF	PART NO.	DESCRIPTION	COMMENTS
	RB100001	Bearing Kit	HC20, SC20 and UC20 models; Models starting Serial No. 0611; Includes items 1, 2, 4, 6, 7, F430949 Screw, F792000 Shell Front Gasket Kit, F812P3 Kit and F8312001 Shaft Seal Sleeve
	RB100002	Bearing Kit	HC30, SC30 and UC30 models; Includes items 1, 2, 4, 6, 7, F430987 Screw, F792000 Shell Front Gasket Kit and F8312004 Shaft Seal Sleeve
1	F430239	Nut	20 pound models
	F430240	Nut	30 pound models
2	F431128	Washer	20 pound models
	F431131	Washer	30 pound models
3	F747001	Trunnion Kit	HC20, SC20 and UC20 models that have been upgraded with F935P3 Pressfit Upgrade Kit; Models that have not been upgraded **MUST** order F935P3 Pressfit Upgrade Kit; HC25 models; Includes items 1, 2, 4-7, F430949 Screw and F792000 Shell Front Gasket Kit
	F747002	Trunnion Kit	HC30, SC30 and UC30 models; Includes items 1, 2, 4-7, F430949 Screw and F792000 Shell Front Gasket Kit
4	F100208	Shaft Seal	HC20, SC20 and UC20 models through 3/31/08
	F8203801	Triple Lip Seal	HC20, SC20 and UC20 models starting 4/1/08; Models HC25VC2 and HC25VX2
	F8203802	Triple Lip Seal	HC30, SC30 and UC30 models
5	F8344901	Retaining Ring	HC20, SC20 and UC20 models; Models that have been upgraded with F935P3 Pressfit Upgrade Kit
	F8345001	Retaining Ring	HC30, SC30 and UC30 models; Models that have been upgraded with F936P3 Pressfit Upgrade Kit
6	F100108	Bearing	6208 2RS C3; HC20, SC20 and UC20 models through 11/6/06; HC30, SC30 and UC30 models; Rear
	F100136P	Bearing	6307 2RS C3; HC20, SC20 and UC20 models starting 11/7/06; HC25 models; Rear
	F100137P	Bearing	6308 2RS C3; HC25 models; Rear
7	F100109P	Motor Bearing	6207 2RS C3; HC20, SC20 and UC20 models; Models through 11/6/06; Front
	F100137P	Bearing	6308 2RS C3; HC20, SC20 and UC20 models; Models starting 11/7/06; Front
	F100123P	Bearing	6309 2RS C3; HC30, SC30 and UC30 models; Front

© Copyright, Alliance Laundry Systems LLC – DO NOT COPY or TRANSMIT

Trunnion - 40, 50 and 60 Pound Models

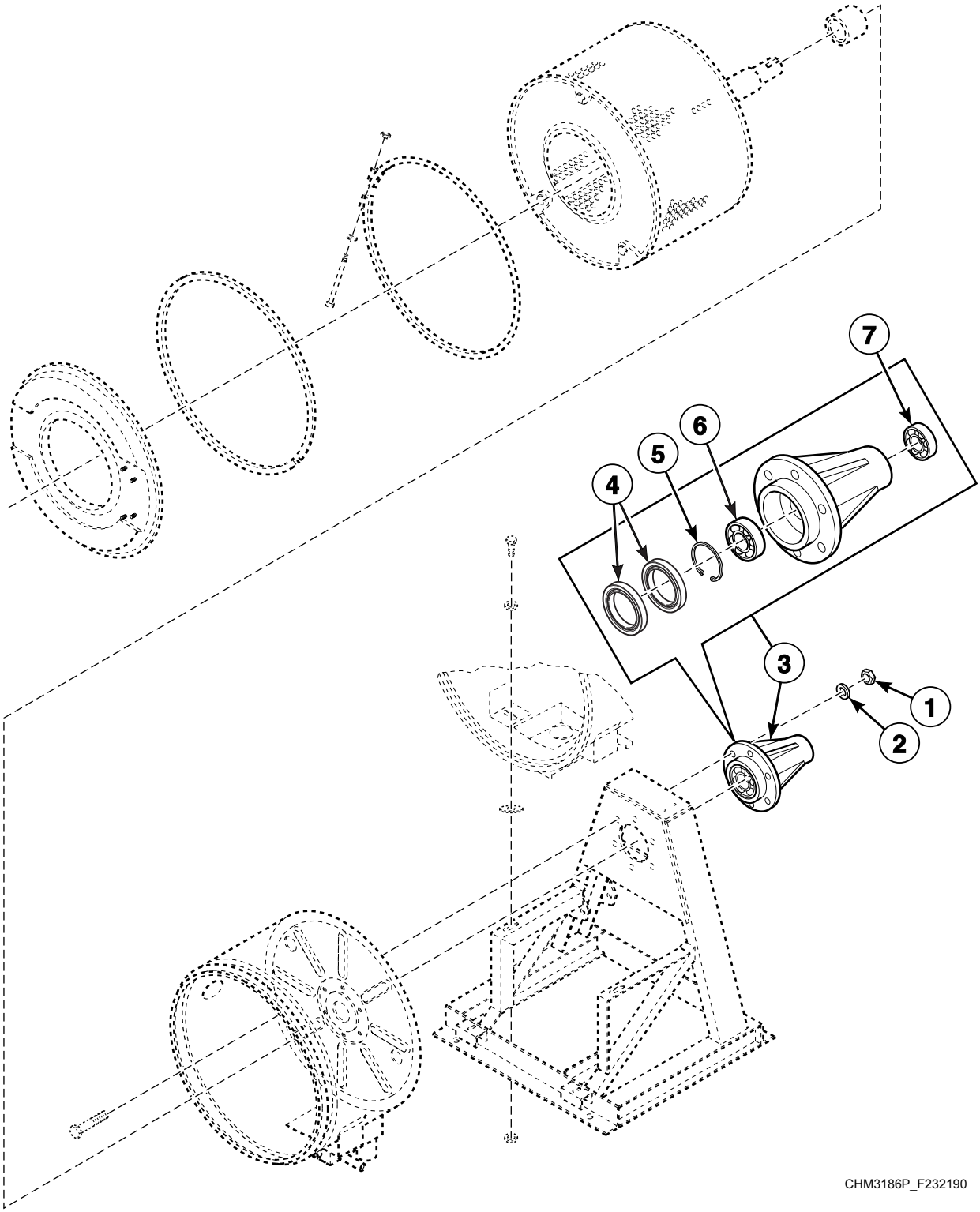

© Copyright, Alliance Laundry Systems LLC – DO NOT COPY or TRANSMIT

Trunnion - 40, 50 and 60 Pound Models

REF	PART NO.	DESCRIPTION	COMMENTS
	RB100003	Bearing Kit	HC40, SC40 and UC40 models; Models through Serial No. 0710; Includes items 1, 2, 4, 6, 7, F430987 Screw, F792000 Shell Front Gasket Kit, F813P3 Kit and F8312003 Shaft Seal Sleeve
	RB100004	Bearing Kit	HC40, SC40 and UC40 models; Models starting Serial No. 0710; Includes items 1, 2, 4, 6, 7, F430987 Screw, F792000 Shell Front Gasket Kit, F813P3 Kit and F8312005 Shaft Seal Sleeve
	RB100005	Bearing Kit	HC50, SC50 and UC50 models; Models starting Serial No. 0710; Includes items 1, 2, 4, 6, 7, F430987 Screw, F792000 Shell Front Gasket Kit, F813P3 Kit and F8312008 Shaft Seal Sleeve
	RB100006	Bearing Kit	HC60, SC60 and UC60 models; Models starting Serial No. 0710; Includes items 1, 2, 4, 6, 7, F430987 Screw, F792000 Shell Front Gasket Kit, F813P3 Kit and F8343909 Shaft Seal Sleeve
1	F430240	Nut	
2	F431131	Washer	
3	F747002	Trunnion Kit	HC40, SC40 and UC40 models; Models through 10/14/07; Includes items 1, 2, 4-7, F430949 Screw and F792000 Shell Front Gasket Kit
	F747003	Trunnion Kit	HC40, SC40 and UC40 models; Models starting 10/15/07 or that have been upgraded with F938P3 Pressfit Upgrade Kit; Includes items 1, 2, 4-7, F430987 Screw and F792000 Shell Front Gasket Kit
	F942P3	Pressfit Upgrade Kit	HC50, SC50 and UC50 models; Includes items 1, 2, 4-7, F430987 Screw and F792000 Shell Front Gasket Kit
	F747005	Trunnion Kit	HC50, SC50 and UC50 models that have been upgraded with F942P3 Pressfit Upgrade Kit; HC60, SC60 and UC60 models; Includes items 1, 2, 4-7, F430987 Screw and F792000 Shell Front Gasket Kit
4	F8203802	Triple Lip Seal	HC40, SC40 and UC40 models; Models with F747002 Trunnion Kit installed
	F8203803	Triple Lip Seal	HC40, SC40 and UC40 models; Models with F747003 Trunnion Kit installed
	F8203805	Triple Lip Seal	HC50, SC50 and UC50 models
	F8203806	Triple Lip Seal	HC60, SC60 and UC60 models
5	F8337801	Retaining Ring	HC40, SC40 and UC40 models; Models that have been upgraded with F938P3 Pressfit Upgrade Kit
	F8337901	Retaining Ring	HC60, SC60 and UC60 models; Models that have been upgraded with F939P3 Pressfit Upgrade Kit
6	F100108	Bearing	6208 2RS C3; HC40, SC40 and UC40 models; Rear
	F100123P	Bearing	6309 2RS C3; HC50, SC50 and UC50 models; Rear
	F100134	Bearing	6310 2RS C3; HC60, SC60 and UC60 models; Rear
7	F100123P	Bearing	6309 2RS C3; HC40, SC40 and UC40 models; Front
	F100122	Bearing	6312 2RS C3; HC50, SC50 and UC50 models; Front
	F100135	Bearing	6313 2RS C3; HC60, SC60 and UC60 models; Front

© Copyright, Alliance Laundry Systems LLC – DO NOT COPY or TRANSMIT

Motor, Pulley and Belt Assembly - 20, 25 and 30 Pound Models (Drawing 1 of 3)

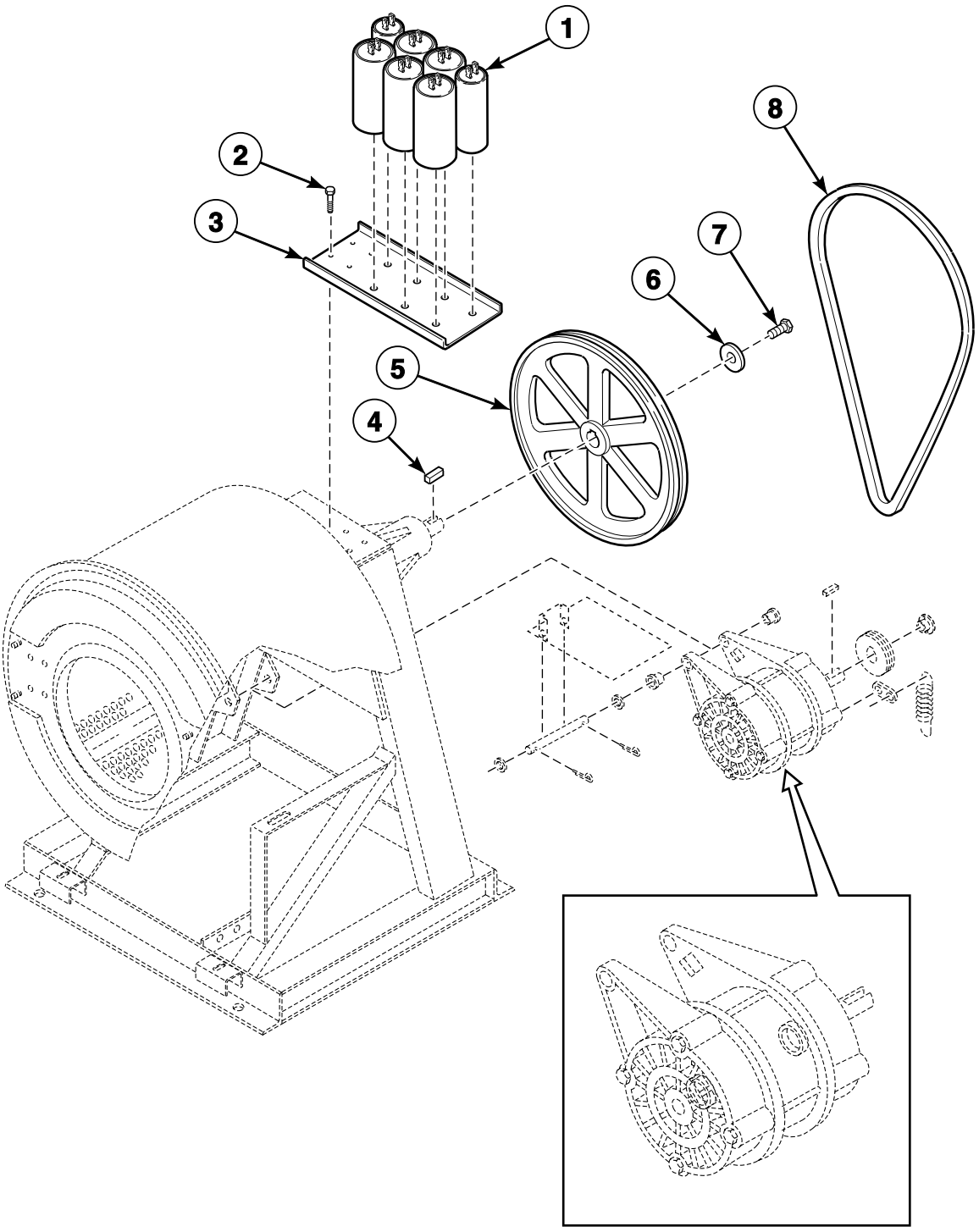

CHM2598P_F232190

© Copyright, Alliance Laundry Systems LLC – DO NOT COPY or TRANSMIT

Motor, Pulley and Belt Assembly - 20, 25 and 30 Pound Models (Drawing 1 of 3)

REF	PART NO.	DESCRIPTION	COMMENTS
1	F370230	Capacitor	10 Microfarad; 1 Phase models; HC25, HC30, SC30 and UC30 E-voltage models with Elmo motors 2 used
	F370224P	Capacitor	20 Microfarad; 1 Phase models; HC25, HC30, SC30 and UC30 Y-voltage models with Elmo motors 4 used; HC25, HC30, SC30 and UC30 E-voltage models with Elmo motors 3 used
	F8411801	Capacitor	25 Microfarad; 1 Phase models; HC20, SC20 and UC20 Y-voltage models with Elmo motors 1 used
	F8411901	Capacitor	50 Microfarad; 1 Phase models; HC20, SC20 and UC20 Y-voltage models with Elmo motors 1 used
	F370221	Capacitor	100 Microfarad; 1 Phase models; HC20, SC20 and UC20 B-voltage models with Elmo motors 2 used; HC25, HC30, SC30 and UC30 E-voltage models with Elmo motors 2 used
	F370220	Capacitor	130 Microfarad; 1 Phase models; HC20, SC20 and UC20 B-voltage models with Elmo motors 1 used; HC25, HC30, SC30 and UC30 Y-voltage models with Elmo motors 1 used
2	F430108	Screw	
3	F200033500	Capacitor Mounting Bracket	HC20, HC25, HC30, SC20, SC30, UC20 and UC30 models
4	F430801	Key	
5	F280168	Pulley	HC20, HC25, SC20 and UC20 models
	F280172	Sheave Pulley	HC30, SC30 and UC30 models
6	F0431159-00	Washer	
7	F430927	Screw	
	F430100	Screw	HC20, SC20 and UC20 models; Models that have been upgraded with F935P3 Pressfit Upgrade Kit
8	F280343	Belt	HC20, SC20 and UC20 models; C, D, E and J-voltage; 3V-730
	F280337	Belt	HC20, SC20 and UC20 models; B, C, F, L, O and Y-voltage; 3V-710
	F280343	Belt	HC20, SC20 and UC20 models; F-voltage; Heat; 3V-730; Replaces F280337 Belt
	F280337	Belt	Models HC25VC2 and HC25VX2; C, D, F, H, J, L, O and Y-voltage; 3V-710
	F028038000P	Belt	Models HC25VC2 and HC25VX2; E-voltage; 3V-720; Replaces F280337 Belt
	F280321	Belt	HC30, SC30 and UC30 models; 3V-800

© Copyright, Alliance Laundry Systems LLC – DO NOT COPY or TRANSMIT

Motor, Pulley and Belt Assembly - 20, 25 and 30 Pound Models (Drawing 2 of 3)

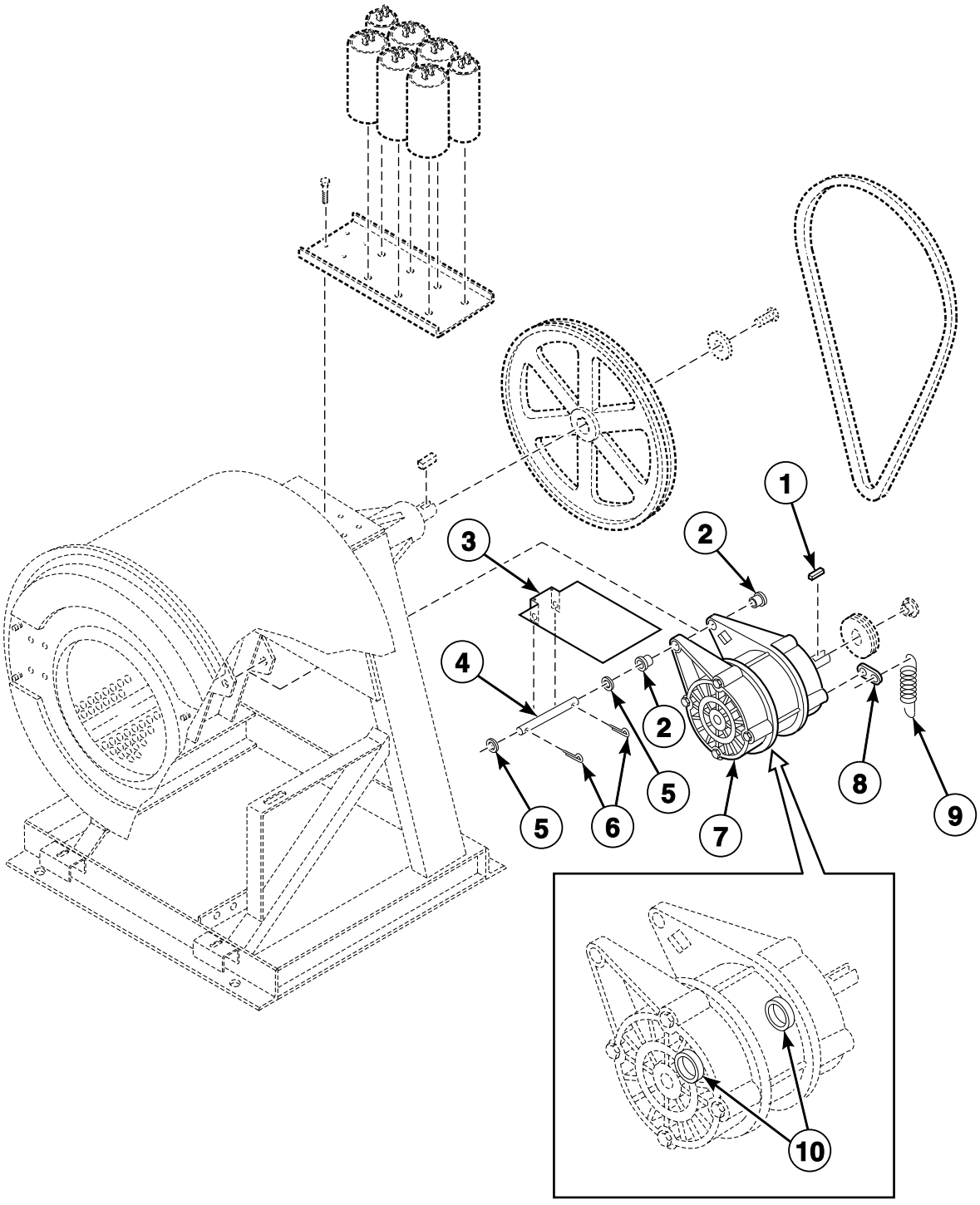

CHM2599P_F232190

© Copyright, Alliance Laundry Systems LLC – DO NOT COPY or TRANSMIT

Motor, Pulley and Belt Assembly - 20, 25 and 30 Pound Models (Drawing 2 of 3)

REF	PART NO.	DESCRIPTION	COMMENTS
1	F430802	Key	
2	F200186100	Motor Support Bushing	
3	F200216900	Motor Drip Shield	
4	F603059	Motor Support Rod	Models HC25VC2 and HC25VX2
	F602844	Motor Support Rod	All other models
5	901690	Washer	
6	F430401	Cotter Pin	
7	F8329301P	Motor	HC20, SC20 and UC20 models; J and O-voltage; Includes motor support bushing; Replaces F022039600P, F220350, F8597101P and F220352 Motors
	F220352	Motor	HC20, SC20 and UC20 models; D-voltage
	F8329401P	Motor	HC20, SC20 and UC20 models; C, F, G and H-voltage; With or without heat; Includes item 2
	F8353501P	Motor Conversion Kit	E-voltage; Includes motor support bushing; Replaces F8597901P, F220125P, F220117 and F220130 Motors
	F8597402P	Motor	HC20, SC20 and UC20 models; B-voltage; Includes motor support bushing; Replaces F8329601P and F220110P Motor
	F022012800P	Motor	HC20, SC20 and UC20 models; Y-voltage; Includes item 2; Replaced by F8329501P Motor
	F8411501	Motor Conversion Kit	HC20, SC20 and UC20 models; Y-voltage; Replaces F022012800P Motor and F8597401P Motor
	F8597104P	Motor	Models HC25VC2 and HC25VX2; C, F and H-voltage; Includes motor support bushing; Replaces F8597104P and F022038800P Motor
	F220389P	Motor	HC25, HC30, SC30 and UC30 models; D and J-voltage
	F8597103P	Motor	HC25, HC30, SC30 and UC30 models; O-voltage; Includes motor support bushing; Replaces F8597103P and F022038700P Motor
	F8597501P	Motor	HC25, HC30, SC30 and UC30 models; Y-voltage; Includes motor support bushing; Replaces F8597501P and F022012400P Motor
8	F601515	Clip	Elmo only
9	F310124	Extension Spring	
10	M400592	Ball Bearing	

© Copyright, Alliance Laundry Systems LLC – DO NOT COPY or TRANSMIT

Motor, Pulley and Belt Assembly - 20, 25 and 30 Pound Models (Drawing 3 of 3)

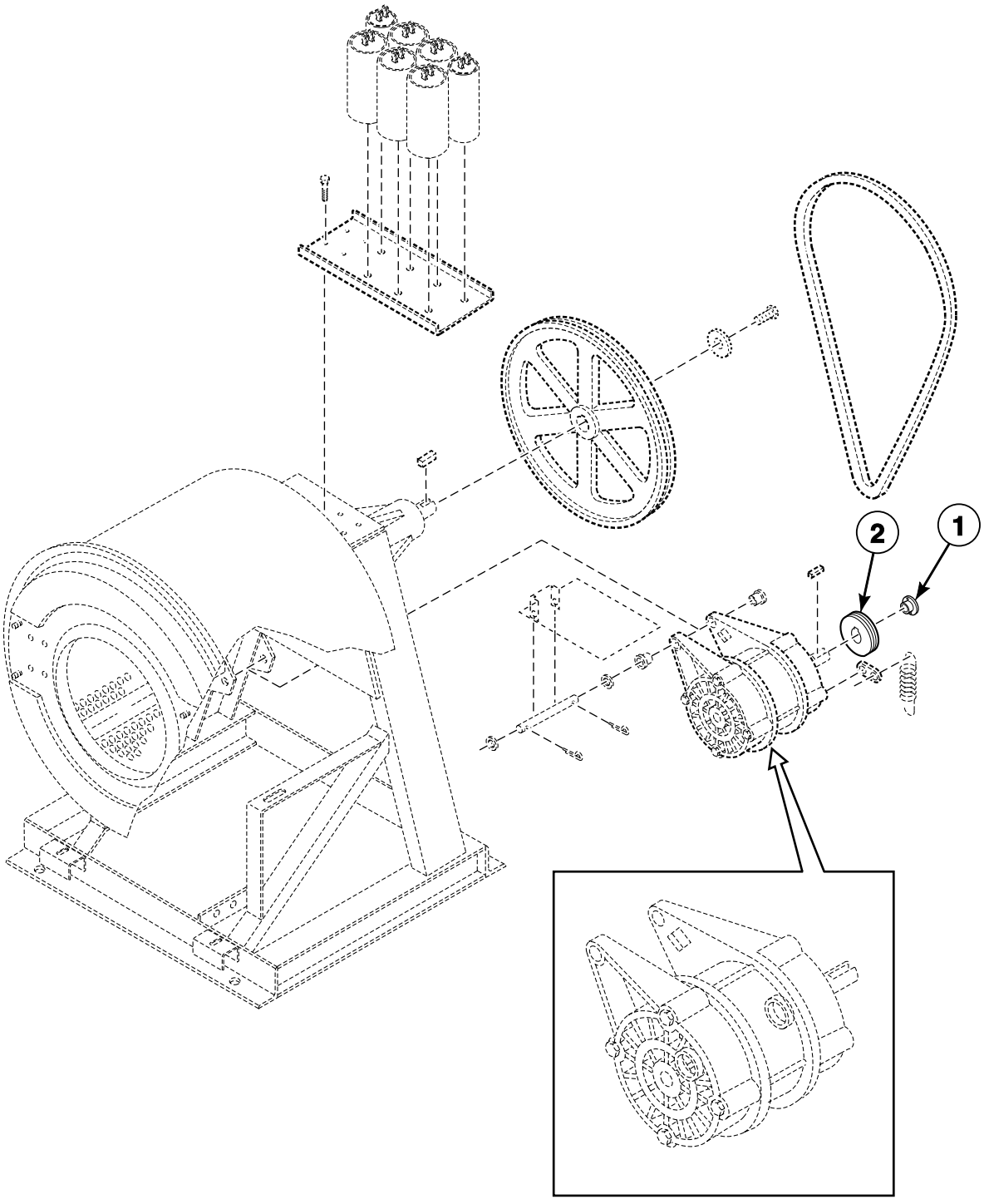

CHM2600P_F232190

© Copyright, Alliance Laundry Systems LLC – DO NOT COPY or TRANSMIT

Motor, Pulley and Belt Assembly - 20, 25 and 30 Pound Models (Drawing 3 of 3)

REF	PART NO.	DESCRIPTION	COMMENTS
1	H87529111P	Bushing	HC20, SC20 and UC20 models; C, D, G and J-voltage; Replaces F280430 Bushing
	F280298P	Pulley Bushing	HC20, SC20 and UC20 models; Models starting 5/24/02; E-voltage
	H87529111P	Bushing	Models HC25VC2 and HC25VX2; C, D and J-voltage; Replaces F280430 Bushing
	F280298P	Pulley Bushing	Models HC25VC2 and HC25VX2; E-voltage; Replaces 280214 Motor Bushing
	F280298P	Pulley Bushing	Models HC25VC2 and HC25VX2; L and Y-voltage; Replaces F220209 Bushing
	H87529111P	Bushing	HC30, SC30 and UC30 models; C and D-voltage; Replaces F280340 Bushing
	H87529111P	Bushing	HC30, SC30 and UC30 models; J-voltage; Replaces F280430 Bushing
	F280225P	Bushing	HC30, SC30 and UC30 models; E-voltage
2	F280427P	Pulley	HC20, SC20 and UC20 models; C, D, E, G and J-voltage; Replaces F280184 Pulley; Replacement of F280184 Pulley requires F280430 Bushing
	F280427P	Pulley	HC20, SC20 and UC20 models; E-voltage; Replaces F280184 Pulley and F280430 Bushing; Replacement of F280184 Pulley requires F280298P Pulley Bushing
	F280170	Sheave Pulley	HC20, SC20 and UC20 models; B, F, H, O and Y-voltage
	F280170	Sheave Pulley	HC20, SC20 and UC20 models; F and H-voltage; Heat
	F280427P	Pulley	Models HC25VC2 and HC25VX2; C, D and J-voltage; Replaces F280184 Pulley; Replacement of F280184 Pulley requires F280430 Bushing; F280430 Bushing is used with F280427 Pulley
	F280427P	Pulley	Models HC25VC2 and HC25VX2; E-voltage; Replaces F280180 Pulley; Replacement of F280180 Pulley requires F280298P Pulley Bushing; F280298P Pulley Bushing is used with F280427 Pulley
	F280170	Sheave Pulley	Models HC25VC2 and HC25VX2; F, H and O-voltage
	F280416	Pulley	Models HC25VC2 and HC25VX2; L and Y-voltage; Replaces F280139 Pulley and F280298P Pulley Bushing; F280298P Pulley Bushing is used with F280416 Pulley
	H87520334	Sheave	HC30, SC30 and UC30 models; C and D-voltage; Replaces F280283 Pulley; Replacement of F280283 Pulley requires F280430 Bushing; F280430 Bushing is used with F280418 Pulley
	F280423	Pulley	HC30, SC30 and UC30 models; E-voltage; F280225P Bushing is used with F280423 Pulley
	F280284	Pulley	HC30, SC30 and UC30 models; F, H and O-voltage
	F280281	Motor Pulley	HC30, SC30 and UC30 models; Y-voltage; Replaces F280198 Pulley

© Copyright, Alliance Laundry Systems LLC – DO NOT COPY or TRANSMIT

Motor, Pulley and Belt Assembly - 40, 50 and 60 Pound Models (Drawing 1 of 2)

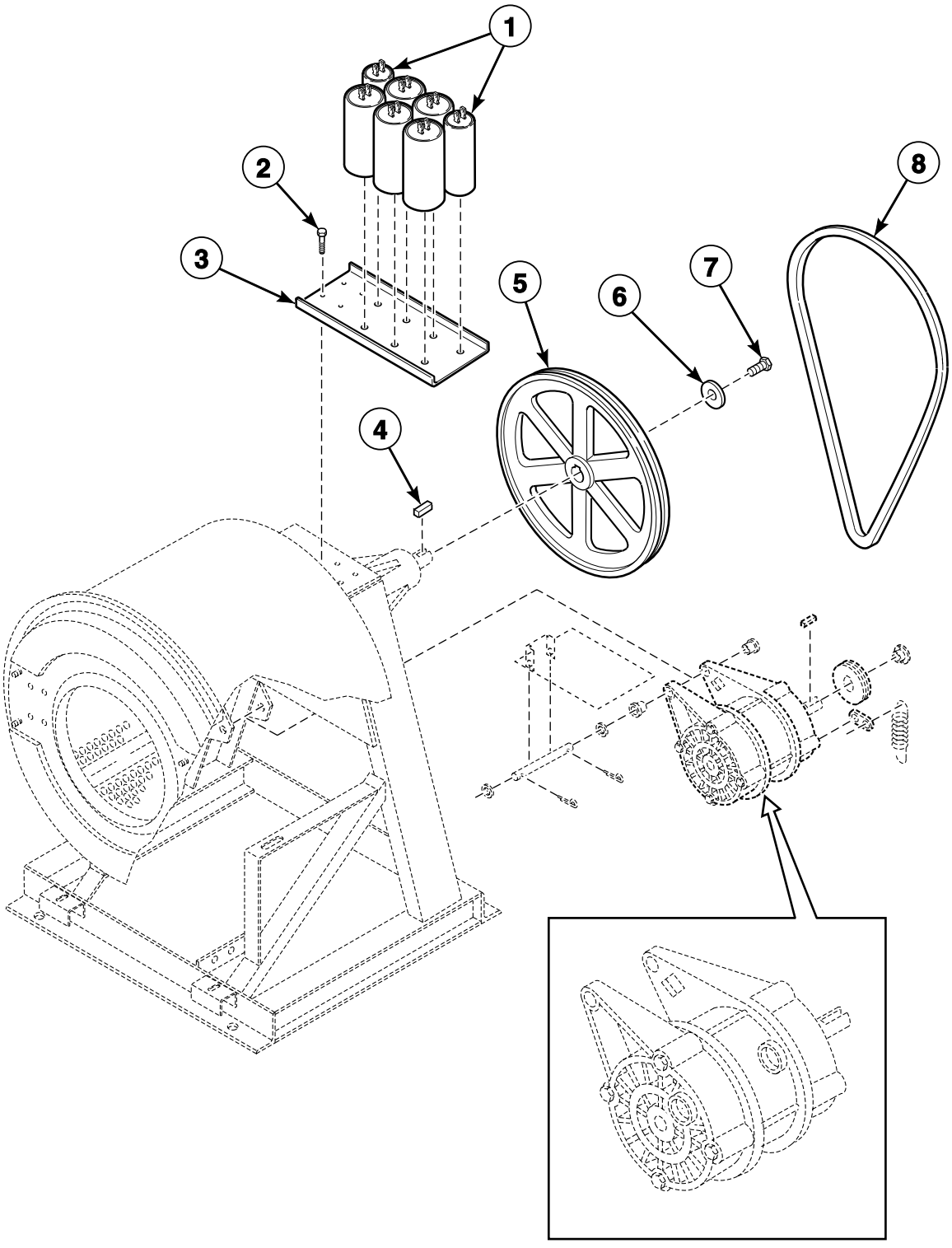

CHM2601P_F232190

© Copyright, Alliance Laundry Systems LLC – DO NOT COPY or TRANSMIT

Motor, Pulley and Belt Assembly - 40, 50 and 60 Pound Models (Drawing 1 of 2)

REF	PART NO.	DESCRIPTION	COMMENTS
1	F370224P	Capacitor	20 Microfarad; 1 Phase models; HC40, SC40 and UC40 Y-voltage models with Elmo motors 1 used; HC50, SC50 and UC50 Y-voltage models with Elmo motors 3 used
	F8411801	Capacitor	25 Microfarad; 1 Phase models; HC40, SC40 and UC40 Y-voltage models with Elmo motors 1 used
	F8411901	Capacitor	50 Microfarad; 1 Phase models; HC40, SC40 and UC40 Y-voltage models with Elmo motors 1 used; HC50, SC50 and UC50 Y-voltage models with Elmo motors 2 used
	F370220	Capacitor	130 Microfarad; 1 Phase models; HC50, SC50 and UC50 Y-voltage models with Elmo motors 3 used
	F370218P	Capacitor	160 Microfarad; 1 Phase models; HC40, SC40 and UC40 Y-voltage models with Elmo motors 1 used
2	F430108	Screw	
3	F200033500	Capacitor Mounting Bracket	
4	F430801	Key	
5	F280197	Pulley	HC40, SC40 and UC40 models
	F280173	Pulley	HC50, HC60, SC50, SC60, UC50 and UC60 models
6	F431115	Washer	
7	F430100	Screw	
8	F280341	Belt	HC40, SC40 and UC40 models; C, D and J-voltage; 3V850
	F280342	Belt	HC40, SC40 and UC40 models; F, H, O and Y-voltage; 3V-830
	F280373	Belt	HC50, HC60, SC50, SC60, UC50 and UC60 models; C, D and J-voltage; 3V-90.65; Replaces F280304 Belt in 50 Hertz models
	F280304	Belt	HC50, HC60, SC50, SC60, UC50 and UC60 models; F, H, O and Y-voltage; 3V-900

© Copyright, Alliance Laundry Systems LLC – DO NOT COPY or TRANSMIT

Motor, Pulley and Belt Assembly - 40, 50 and 60 Pound Models (Drawing 2 of 2)

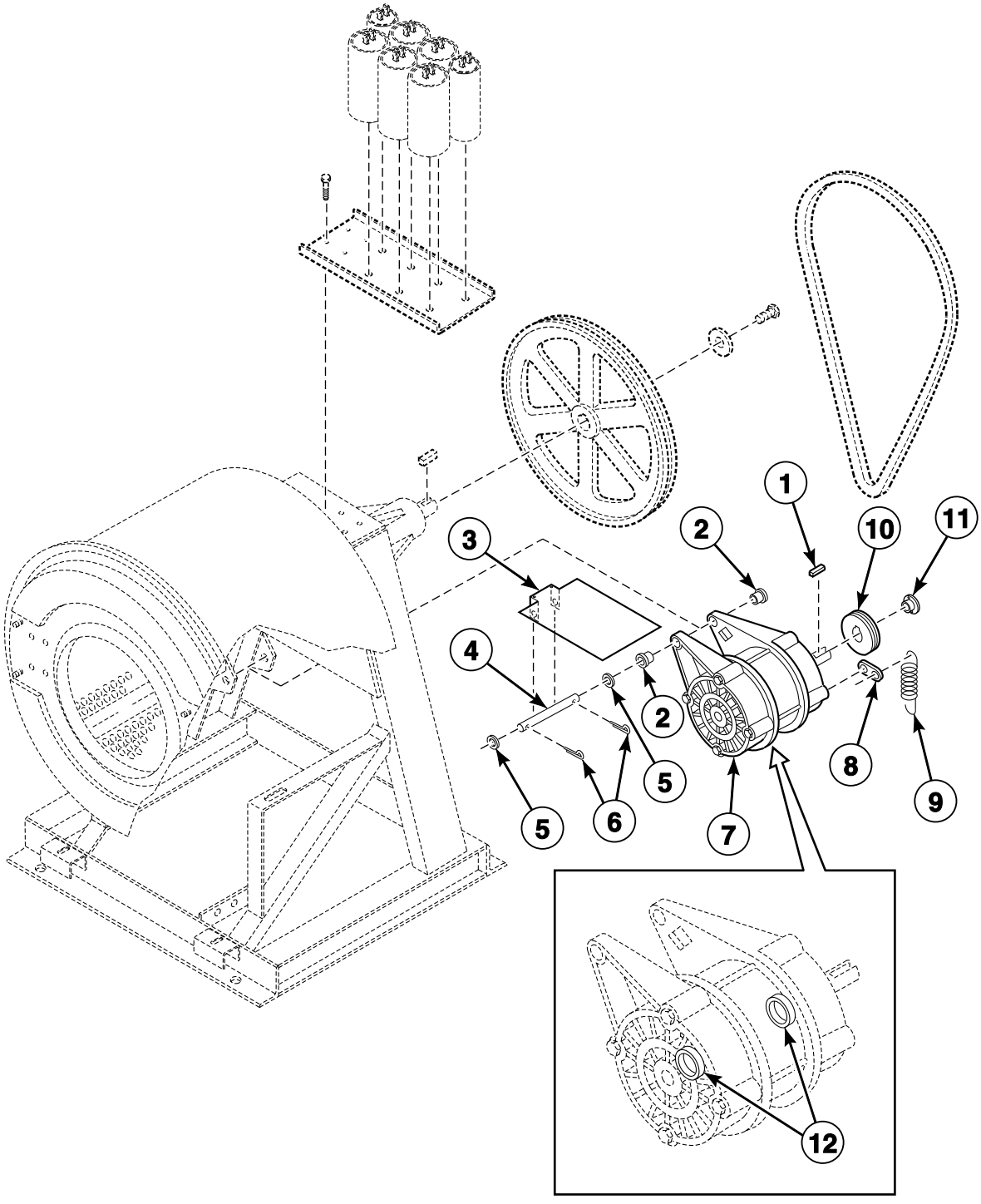

CHM2602P_F232190

© Copyright, Alliance Laundry Systems LLC – DO NOT COPY or TRANSMIT

Motor, Pulley and Belt Assembly - 40, 50 and 60 Pound Models (Drawing 2 of 2)

REF	PART NO.	DESCRIPTION	COMMENTS
1	F430802	Key	
2	F200186100	Motor Support Bushing	
3	F200216900	Motor Drip Shield	HC40, SC40 and UC40 models; All voltages except Y-voltage
	F200280700	Motor Drip Shield	HC40, SC40 and UC40 models Y-voltage; HC50, HC60, SC50, SC60, UC50 and UC60 models
4	F603059	Motor Support Rod	HC40, SC40 and UC40 models
	F603897	Motor Support Rod	HC50, HC60, SC50, SC60, UC50 and UC60 models
5	901690	Washer	
6	F430401	Cotter Pin	
7	F8597801P	Motor	HC40, SC40 and UC40 models; Replaces F8597801P and F0220321-00P Motor; Includes motor support bushing
	F8597502P	Motor	HC40, SC40 and UC40 models; HC50, SC50 and UC50 models Y-voltage; Replaces F8330201P and F0220120-01P Motor; Includes motor support bushing
	F0798912-00	Motor Retrofit Kit	Replaces F0220137-00 Motor; HC40, SC40 and UC40 models; Models starting Serial No. 3020329162
	F220354P	Motor	HC50, HC60, SC50, SC60, UC50 and UC60 models; D-voltage
	F8597803P	Motor	HC50, HC60, SC50, SC60, UC50 and UC60 models; J and O-voltage; Replaces F8330301P, F022032200P and F220354 Motors; Includes motor support bushing
	F8597804P	Motor	Replaces F8330401P Motor; HC50, HC60, SC50, SC60, UC50 and UC60 models; C, F, G and H-voltage; Includes item 2
8	F601515	Clip	Elmo only
9	F310124	Extension Spring	40 and 50 pound models
	F8440701	Extension Spring	60 pound models
10	F280105P	Pulley	HC40, SC40 and UC40 models; C, D, G and J-voltage; Replaces F280185 Motor Pulley; F280225P Bushing is used with F280105P Pulley
	F0280385-00	Sheave	HC40, SC40 and UC40 models; F, H, O and Y-voltage
	F280422P	Pulley	HC50, HC60, SC50, SC60, UC50 and UC60 models; C, D, G and J-voltage; Replaces F280186P Pulley; F280225P Bushing is used with F280422 Pulley
	F0280385-00	Sheave	HC50, HC60, SC50, SC60, UC50 and UC60 models; F, H, K, O and Y-voltage
	F280287P	Sheave Kit	HC60, SC60 and UC60 models; X-voltage
11	F280225P	Bushing	HC40, HC50, HC60, SC40, SC50, SC60, UC40, UC50 and UC60 models; C, D, G and J-voltage
12	F100124	Motor Bearing	

© Copyright, Alliance Laundry Systems LLC – DO NOT COPY or TRANSMIT

Steam Heat Assembly

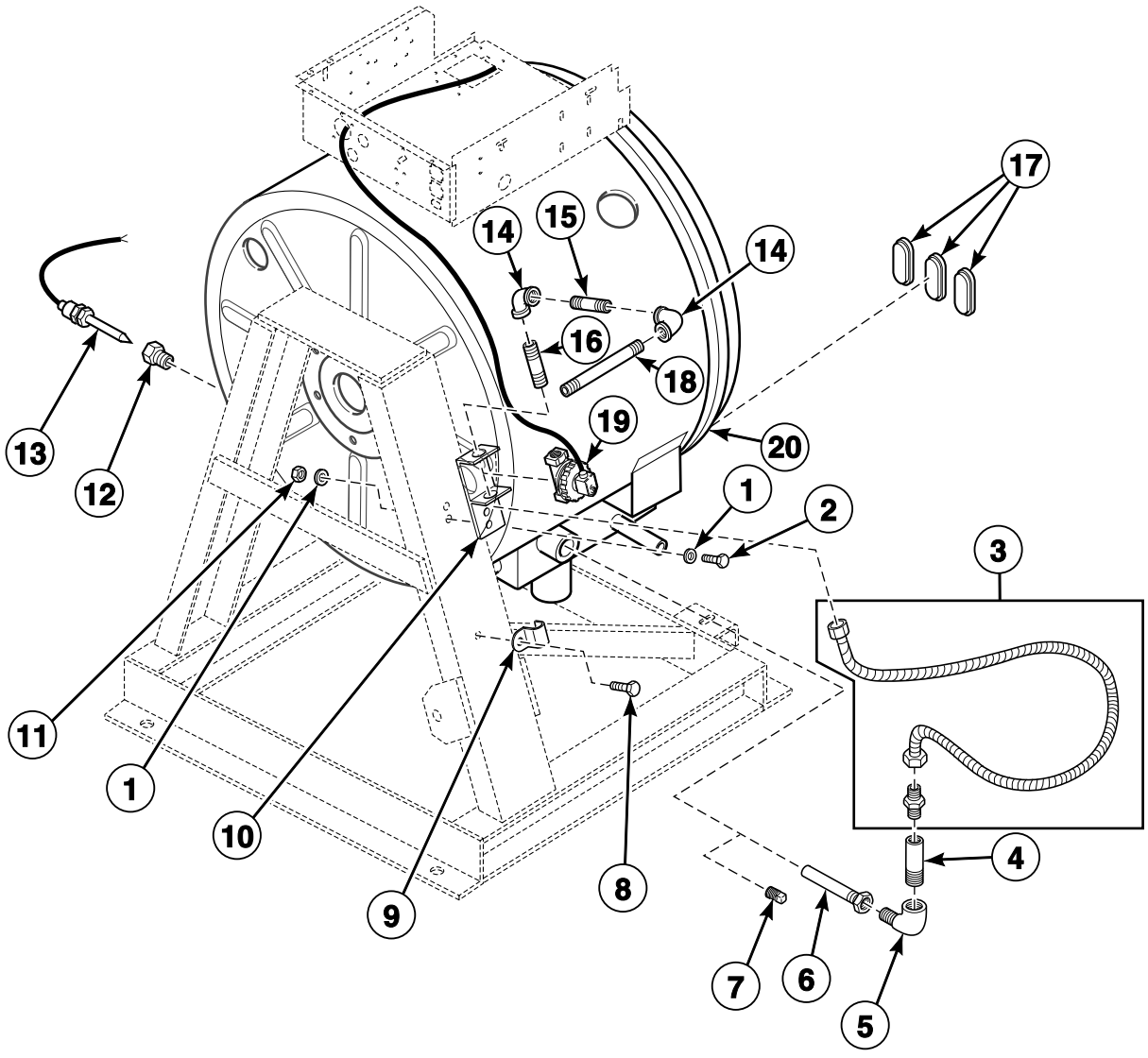

© Copyright, Alliance Laundry Systems LLC – DO NOT COPY or TRANSMIT

Steam Heat Assembly

REF	PART NO.	DESCRIPTION	COMMENTS
	F8514701	Coil	Use with F8322802 Valve
	F8514601P	Coil	Use with F8322801P Valve
	F8382301	DIN Valve Adapter Kit	Use with F8322801P Valve and F8322802 Valve
	F8379501P	Valve Kit	Use with F8322801P Valve and F8322802 Valve
	F380986P	DIN Coil	120 Volt; Parker
1	F430317	Washer	
2	F430108	Screw	
3	F200153P	Steam Hose	HC40, SC40 and UC40 models
	F200154	Steam Hose	All other models
	F410300	Pipe Insulation	
4	70435601	Pipe Nipple	HC40, SC40 and UC40 models
5	70079601	Elbow	HC40, SC40 and UC40 models
6	F8368201	Steam Injector Tube Assembly	
7	F200202600	Plug	
8	F430115	Screw	
9	N/A	Cable Strap	
10	F601186	Steam Bracket Assembly	
11	F430215	Nut	
12	F421936	Reducer Bushing	
13	F370606P	Temperature Probe	
14	70079601	Elbow	
15	F420708	Nipple	
16	70435601	Pipe Nipple	
17	F360202	Heating Element Plug	
18	70214101	Pipe Nipple	
19	F8322802	Valve	Replaces F380786P Steam Valve; Includes F8514701 Coil; For models that have been upgraded with F8521601 DIN Valve Kit
	F8521601	DIN Valve Kit	Replaces F380786P Steam Valve; Includes F8322802 Valve and F8514701 Coil
	F8322801P	Valve	Replaces F380787P Steam Valve; Includes F8514601 Coil; For models that have been upgraded with F8521801 DIN Valve Kit
	F8521801	DIN Valve Kit	Replaces F380787P Steam Valve; Includes F8322801P Valve, F8382301 DIN Valve Adapter Kit and F8514601 Coil
20	F0637054-00	Shell Weldment	HC20, SC20 and UC20 models; E-voltage; Heat option
	F0636601-00	Shell Weldment	HC20, SC20 and UC20 models; All voltages except E; Heat option
	F0636700-00	Shell Weldment	Models HC25VC2 and HC25VX2; Heat option
	F0636704-00	Shell Weldment	HC30, SC30 and UC30 models; Heat option
	F8196202	Shell Weldment	HC40, SC40 and UC40 models; Models through 1/25/05; Heat option; Centered top hole in back of shell
	F200199700	Shell Weldment	HC40, SC40 and UC40 models; Models through 1/25/05; Heat option; No centered top hole in back of shell
	F8196204	Shell Weldment	HC40, SC40 and UC40 models; Models starting 1/26/05; Heat option
	F0636747-00	Shell Weldment	HC50, SC50 and UC50 models; Heat option
	F0637661-00	Shell Weldment	HC60, SC60 and UC60 models; Heat option

N/A = Part no longer available

© Copyright, Alliance Laundry Systems LLC – DO NOT COPY or TRANSMIT

Electric Heat Option

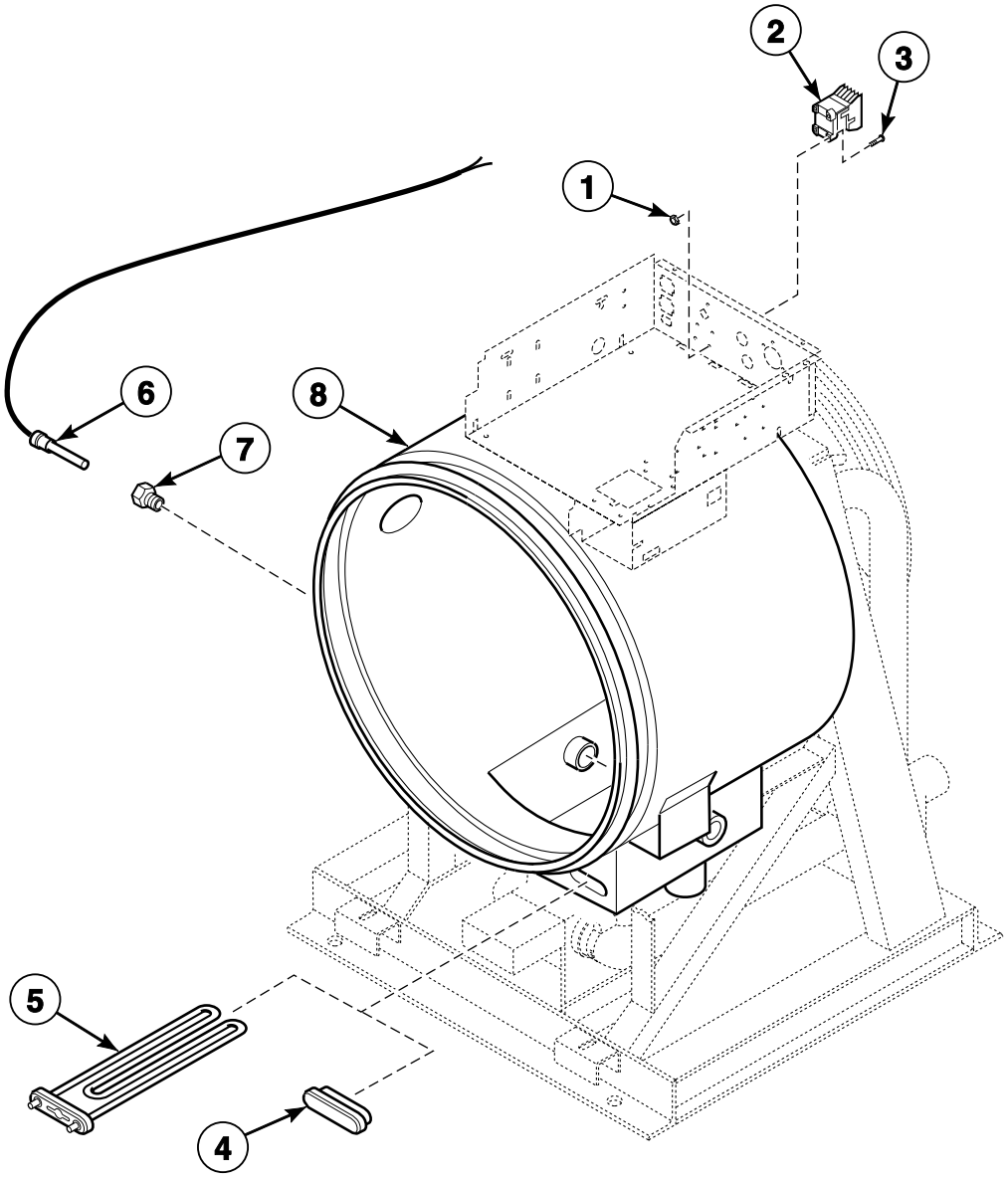

CHM2384P_F232190

© Copyright, Alliance Laundry Systems LLC – DO NOT COPY or TRANSMIT

Electric Heat Option

REF	PART NO.	DESCRIPTION	COMMENTS
1	F430231	Nut	
2	F330188P	Contactor	HC20, HC25, HC30, SC20, SC30, UC20 and UC30 models E-voltage; HC20, HC25, HC30, SC20, SC30, UC20 and UC30 models Y-voltage 220 Volt ; HC50, HC60, SC50, SC60, UC50 and UC60 models C-voltage; HC50, HC60, SC50, SC60, UC50 and UC60 models H and O-voltage 220 Volt; HC50, HC60, SC50, SC60, UC50 and UC60 models D and J-voltage
	F330175P	Contactor	HC20, HC25, HC30, SC20, SC30, UC20 and UC30 models F and H-voltage 120 Volt; HC20, HC25, HC30, SC20, SC30, UC20 and UC30 models O-voltage 120 Volt
	F330177P	Contactor	HC20, HC25, HC30, SC20, SC30, UC20 and UC30 models C, D and J-voltage; HC20, HC25, HC30, SC20, SC30, UC20 and UC30 models F, H and O-voltage 220 Volt
	F330187P	Contactor	HC20, HC25, HC30, SC20, SC30, UC20 and UC30 models Y-voltage 120 Volt; HC50, HC60, SC50, SC60, UC50 and UC60 models H and O-voltage 120 Volt
	F330180P	Contactor	HC40, SC40 and UC40 models O-voltage 120 Volt; HC50, HC60, SC50, SC60, UC50 and UC60 models F-voltage 120 Volt
	F330179P	Contactor	HC40, SC40 and UC40 models C-voltage; HC40, SC40 and UC40 models F and H-voltage 220 Volt
	F330178P	Contactor	HC40, SC40 and UC40 models; F and H-voltage; 120 Volt
	F330182	Contactor	HC40, SC40 and UC40 models O-voltage 220 Volt; HC50, HC60, SC50, SC60, UC50 and UC60 models F-voltage 220 Volt; HC40, SC40 and UC40 models D and J-voltage
3	F430916	Screw	
4	F360202	Heating Element Plug	
5	F360206P	Heating Element	2.0 kW; HC20, SC20 and UC20 models; E-voltage
	F0360210-00	Heating Element	5.2 kW; HC40, SC40 and UC40 models; 3 required
	F360205P	Element	2.6 kW; All other models
6	F370606P	Temperature Probe	
7	F421936	Reducer Bushing	
8	F0636601-00	Shell Weldment	HC20, SC20 and UC20 models; All voltages except E; Heat option
	F0637054-00	Shell Weldment	HC20, SC20 and UC20 models; E voltage; Heat option
	F0636700-00	Shell Weldment	Models HC25VC2 and HC25VX2; Heat option
	F0636704-00	Shell Weldment	HC30, SC30 and UC30 models; Heat option
	F8196202	Shell Weldment	HC40, SC40 and UC40 models; Models through 1/25/05; Heat option; Centered top hole in back of shell
	F200199700	Shell Weldment	HC40, SC40 and UC40 models; Models through 1/25/05; Heat option; No centered top hole in back of shell
	F8196204	Shell Weldment	HC40, SC40 and UC40 models; Models starting 1/26/05; Heat option
	F0636747-00	Shell Weldment	HC50, SC50 and UC50 models; Heat option
	F0637661-00	Shell Weldment	HC60, SC60 and UC60 models; Heat option

© Copyright, Alliance Laundry Systems LLC – DO NOT COPY or TRANSMIT

Special Tools

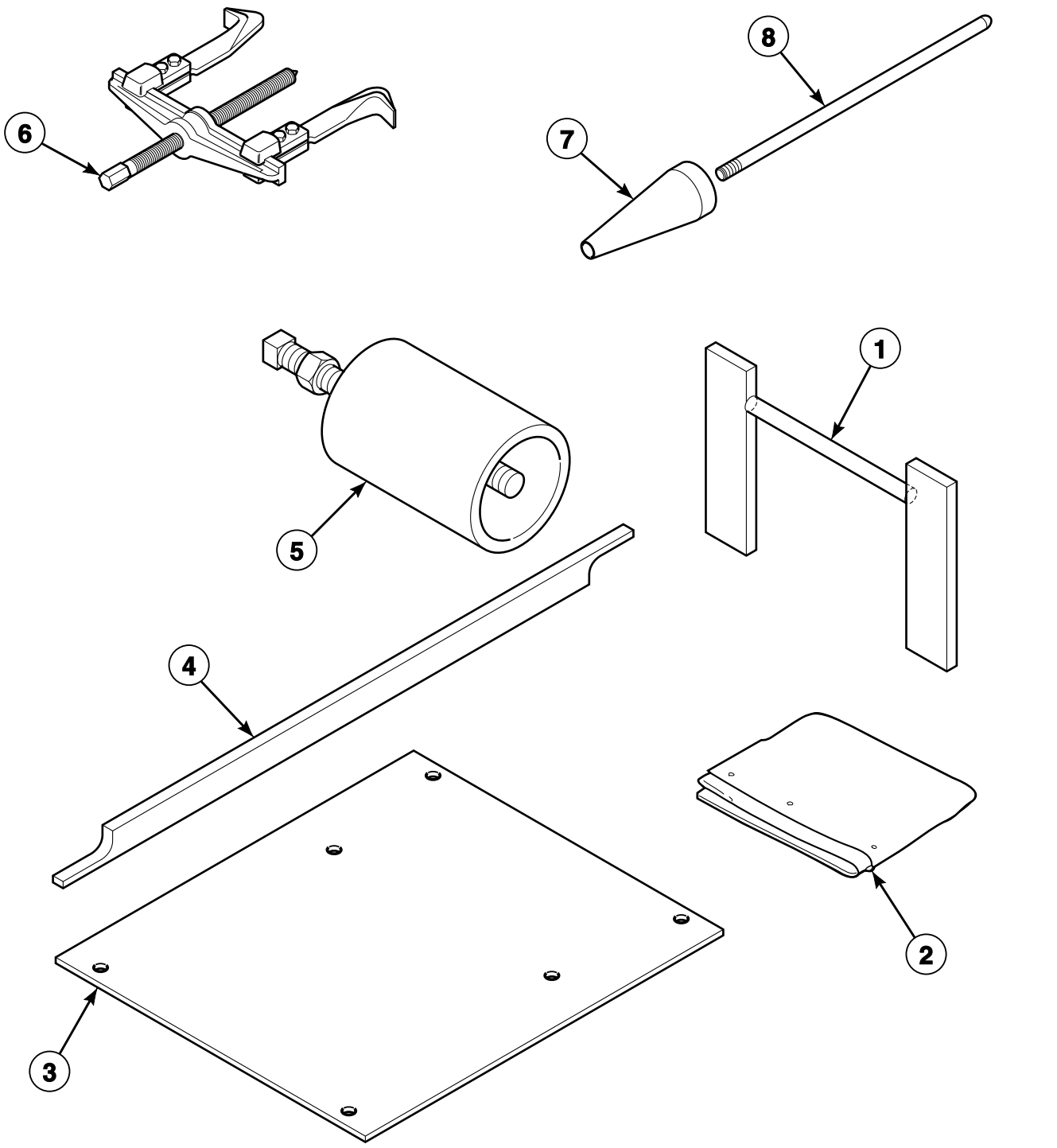

CHM2970P_F232190

© Copyright, Alliance Laundry Systems LLC – DO NOT COPY or TRANSMIT

Special Tools

REF	PART NO.	DESCRIPTION	COMMENTS
1	F460131P	Basket Pulley Puller Tool	
2	F450127	Template	HC50, SC50 and UC50 models
3	F608707	Bolt Layout Mounting Template	HC20, SC20 and UC20 models
	F631796	Bolt Layout Mounting Template	HC30, SC30 and UC30 Models
	F0637047-00	Bolt Layout Mounting Template	HC40, SC40 and UC40 models
	F608710	Bolt Layout Mounting Template	HC50, HC60, SC50, SC60, UC50 and UC60 models
4	N/A	Basket Pulley Alignment Bar	HC50, SC50 and UC50 models
5	F798001	Basket Pulley Kit	HC20, SC20 and UC20 models
	F798002	Basket Puller Kit	HC30, SC30 and UC30 Models
	F798003	Basket Puller Kit	HC50, HC60, SC50, SC60, UC50 and UC60 models
6	F460129P	Basket Puller Tool	
7	396P4	Basket Guide Cone Tool	HC20, SC20 and UC20 models
	397P4	Basket Guide Cone Tool	HC30, SC30, UC30, HC40, SC40 and UC40 models
	398P4	Basket Guide Cone Tool	HC50, SC50, UC50, HC60, SC60 and UC60 models
8	401P4	Basket Installation Tool Rod	

N/A = Part no longer available

© Copyright, Alliance Laundry Systems LLC – DO NOT COPY or TRANSMIT

Notes

© Copyright, Alliance Laundry Systems LLC – DO NOT COPY or TRANSMIT

Parts Index

A

Air Chamber Nipple
F634178 ... 45

Air Trap Hose
F020014200 ... 41, 43, 45

B

Ball Bearing
M400592 ... 75

Basket Assembly
F603900-1 ... 65
F8347901P ... 65
F8391301P ... 65
F8391305P ... 65
F8391701P ... 65
F8502801P ... 65
F8502803 ... 65

Basket Guide Cone Tool
396P4 ... 87
397P4 ... 87
398P4 ... 87

Basket Installation Tool Rod
401P4 ... 87

Basket Puller Kit
F798002 ... 87
F798003 ... 87

Basket Puller Tool
F460129P ... 87

Basket Pulley Kit
F798001 ... 87

Basket Pulley Puller Tool
F460131P ... 87

Basket Rental Tool Kit
390P4P ... 65

Basket Tool Kit
389P4 ... 65

Bearing
F100108 ... 69, 71
F100122 ... 71
F100123P ... 69, 71
F100134 ... 71
F100135 ... 71
F100136P ... 69
F100137P ... 69

Bearing Kit
RB100001 ... 69
RB100002 ... 69
RB100003 ... 71
RB100004 ... 71
RB100005 ... 71
RB100006 ... 71

Belt
F028038000P ... 73
F280304 ... 79
F280321 ... 73
F280337 ... 73
F280341 ... 79
F280342 ... 79
F280343 ... 73
F280373 ... 79

Bezel Gasket
F0170190-00P ... 33

Blind Rivet
F8245101 ... 51
J1111905 ... 51

Board
F370555-11P ... 13

Bolt
F430969 ... 51

Bolt Layout Mounting Template
F0637047-00 ... 87
F608707 ... 87
F608710 ... 87
F631796 ... 87

Bridge Rectifier
F370310 ... 17, 19

Bushing
F280225P ... 77, 81
H87529111P ... 77

C

Cabinet Brace
F0636131-00 ... 61
F0636217-00 ... 57, 59
F0636218-00 ... 61
F0636320-00 ... 61
F0636518-00 ... 61
F0636596-00 ... 61
F0637632-00 ... 61
F634800 ... 57, 59
F634801 ... 57, 59
F634803P ... 57, 59

Cabinet Corner Stiffener
F200168900 ... 57, 59

Cap
F190303 ... 33

Capacitor
F370218P ... 79
F370220 ... 73, 79
F370221 ... 73
F370224P ... 73, 79
F370225P ... 19
F370230 ... 73
F8411801 ... 73, 79
F8411901 ... 73, 79

Capacitor Mounting Bracket
F200033500 ... 73, 79

Capacitor Mounting Clamp
F140612P ... 19

Clamp Ring Assembly
F8388002 ... 67

Clip
F601515 ... 13, 75, 81

Coil
F8514601P ... 83
F8514701 ... 83

Coin Box
F160672 ... 25

N/A items do not appear in index.

© Copyright, Alliance Laundry Systems LLC – DO NOT COPY or TRANSMIT

F160673P 25
Coin Guide Assembly
F200002502P 27
F200002503 29
Coin Meter Assembly
F200003800P 27
F200003801 27
F200003802P 27
F200003803 27
F200003805 27
F200003806P 27
F200003807 27
F200003808 27
F200003809 27
F200003810 27
F200003811 27
F200003812 27
F200005200 29
F200005201 29
F200005202 29
F200005203 29
F200005204 29
F200005205 29
F200005206 29
F200005207 29
F200005208 29
F200005209 29
F200005210 29
F200005211 29
F200005212 29
Coin Meter Blocking Coil
F160466P 27, 29
F160467P 27, 29
Coin Meter Decal
F0231595-00 29
Coin Meter Insert
F608925 ..... 27, 29
Coin Meter Insert Decal
F231010 27
Computer
F370555-01P 13
Computer and Door Lock Harness
F200296000P 19
Conductor Decal
F231146 11
Contactor
F330175P 23, 85
F330177P 23, 85
F330178P 85
F330179P 85
F330180P 85
F330182 85
F330187P 85
F330188P 85
Control Box Assembly
F0636969-00 19
F0636969-01 19
F0637033-01 17
Control Panel Assembly
F0636810-01 57
F0636894-00 59
F0636894-01 57
F0636896-00 59
F0636896-01 57
F0636921-00 59
F0636921-01 57
Control Panel Decal
F0231601-32 13
F0231602-32 13
F0231603-32 13
F0231604-31 15
F0231608-00 13
F0231618-00 13
F200021041 13
F231467 13
F231468 13
F231470 13
F231553 15
Cotter Pin
F430401 ..... 75, 81
Counterclockwise Spin Rotation Decal
F230693 ..... 11, 49
Cover
F140423 17

D

Diaphragm and Guide Kit
G582P3 33
DIN Coil
F380986P 83
DIN Valve Adapter Kit
F8382301 83
DIN Valve Kit
F8521601 83
F8521801 83
Do Not Lift Decal
F230216 11
Door
F602837-1 51
F602842-2 51
Door Assembly
F060323905 51
F060390105 51
F603239-4 51
F603901-4 51
F604079-4 51
F604079-5 51
F8150301 51
F8150401 51
F8150501 51
Door Bezel
F170416-2 ..... 57, 59
F170417-2 ..... 57, 59
F8658701 57
F8658901 57
F8659101 ..... 57, 59
Door Gasket
F017012302 49
F017012402 49
F170123 49
F170124 49
F200000200 49
F200000202 49
Door Glass
F8485301P 49
F8485401P 49
Door Glass Kit
F290205P 49
Door Handle
F150225 49

N/A items do not appear in index.

© Copyright, Alliance Laundry Systems LLC – DO NOT COPY or TRANSMIT

Door Handle Kit
F730155 ... 49
Door Hinge
F190216P ... 51
Door Hinge Shim Kit
F200131000P ... 51
Door Lock Assembly
F0636698-04 ... 53
F0636698-05P ... 53
F200136800P ... 55
F200136801 ... 55
Door Lock Assembly Cover
F603003 ... 53, 55
Door Lock Catch Casting
F150261 ... 53, 55
Door Lock CCA
F0632387-01P ... 19
Door Lock Kit
F0798839-00 ... 55
F0798839-01 ... 55
Door Lock Microswitch
F200203200 ... 53, 55
Door Lock Pin Linkage
F150455 ... 53, 55
Door Lock Pin Release Spring
F310137 ... 53, 55
Door Lock Plate Assembly
F8066701 ... 53, 55
Door Lock Plate Shim
F8059701 ... 53, 55
Door Lock Retainer Latch
F0636103-00 ... 55
Door Lock Solenoid
F0300131-00P ... 55
Door Lock Splash Shield
F320200 ... 53, 55
Door Lock Spring
F310125 ... 49
Door Lock Switch Lever
F0636636-00 ... 53, 55
Door Lock Time Delay
F200025200P ... 17, 19
Door Lock Torsion Spring
F310110 ... 53, 55
Door Locking Linkage Pin
F431231 ... 53, 55
Door Mount
F150271 ... 51
Door Release Solenoid
F300128P ... 55
Door Spacer
F0150273-00 ... 49
Door Switch
F340200 ... 53, 55
Door Warning Label
81968 ... 11
Drain Connector Tee
F8017101 ... 43
Drain Hose
F150356 ... 41
F200123400 ... 43
F200123500 ... 43
F200185200 ... 43
F200185300 ... 43
Drain Pump
F270119P ... 47
Drain Tee
F8752101 ... 43
Drain Valve
F8406303 ... 39
F8406304 ... 39
Drain Valve Assembly
F602920 ... 37
F603175 ... 37
Drain Valve Cover
F200133600 ... 37, 39
Drain Valve Kit
F200166300 ... 39
F200166302 ... 39
F200166400 ... 39
F200166402 ... 39

E

Elbow
70079601 ... 83
Electrical Panel Sub-Assembly
F0606950-02 ... 17
Element
F360205P ... 85
E-Ring Retainer
F310205 ... 53, 55
Excluder Seal
F8336801 ... 65
F8336901 ... 65
F8337001 ... 65
F8337101 ... 65
Extension Spring
F310124 ... 75, 81
F8440701 ... 81
External Supply Connection Decal
F231376-1 ... 31
F231376-2 ... 31
F231376-5 ... 31
F231376-6 ... 31
External Supply Fuse Decal
F231271 ... 31

F

Female Pin Terminal
00430 ... 27, 29
Fill Hose
F150372 ... 43
F200116 ... 35
Filter
F270305 ... 35
F270306P ... 35
Filter Housing Cap Gasket
F270407 ... 35
Flange Relay
F330227 ... 17, 19
F330230 ... 17, 19, 21
Frame Assembly
F0637645-00 ... 67
F606178 ... 67

N/A items do not appear in index.

© Copyright, Alliance Laundry Systems LLC – DO NOT COPY or TRANSMIT

F607003 67
F607005 67
F630232 67
Frame Weldment
F0636108-00 67
F200195300 67
Front Drain Hose
F0200240-00 43
F150312 43
F8035801 43
Front Panel
F634666-2 57
F634682-2 59
F634836-1P 59
F634836-2 59
F8200301P 59
F8200302P 57
F8200401P 59
F8200402P 57
F8200501P 59
F8200502P 57
F8200601P 59
F8200602P 57
Fuse
F350108 ..... 19, 21
F350109 ..... 17, 19, 21
F350110 ..... 17, 19, 21
F350115 31
F350125 19
Fuse Holder
F0350312-10 31
Fuse Holder Bracket
F633512 31

G

Grommet
F170615 31
F200139500 31
Ground Decal
F230630 11
F230739 11
Ground Terminal Lug
F140734 31

H

Heating Element
F0360210-00 85
F360206P 85
Heating Element Plug
F360202 ..... 83, 85
Hose
F609748-5 47
Hose Clamp
F200204 ..... 45, 47
F200213 ..... 41, 43, 45, 47
F200215 ..... 39, 41, 43, 45
F200217 47
F200222 ..... 41, 43
36801 31

I

Injection Nozzle
F8322001 33
Injection Nozzle Kit
F730168 33
Input Block
F0140795-00 31
F0140798-00P 31
F0140799-00 31
Input Harness Kit
F141871P 17
Input Power Block
F140746 31
F140747 31
F140748 31
Input Power Connection Box Cover
F602533 31
Input Terminal Block
F140755 31
Interlock Contactor
F330186P 23

K

Key
F160420 25
F160421 25
F160423 25
F430801 ..... 73, 79
F430802 ..... 75, 81
70155603 61
Keypad
F370576P 13

L

L-Catch Kit
F746808 ..... 53, 55
Left Side Panel
F0636136-00P 63
F0636595-00P 63
F8155601P 63
F8155901P 63
F8156701 63
F8157401P 63
F8159901 63
F8160101P 63
Lid Clamp Assembly
F630430 61
Lid Lock Pin
F0190808-00P 61
Liquid Supply Decal
F230877 11

M

Magnet
F8390801 51

N/A items do not appear in index.

© Copyright, Alliance Laundry Systems LLC – DO NOT COPY or TRANSMIT

Magnetic Switch
F0340723-00 ... 51
Magnetic Switch Assembly
F8746601 ... 51
Male Connector
F140571 ... 27, 29
Membrane Switch
F340606P ... 13
F340608P ... 13
F340614P ... 13
F340615P ... 15
Microcomputer
F370313-30P ... 13
F370313-40P ... 15
Module Box Assembly
F200100100 ... 21
F200100101 ... 21
Module Box Cover
F0637179-00 ... 17
Momentary Switch
F200120100 ... 13
F340412 ... 13
Motor
F022012800P ... 75
F220352 ... 75
F220354P ... 81
F220389P ... 75
F8329301P ... 75
F8329401P ... 75
F8597103P ... 75
F8597104P ... 75
F8597402P ... 75
F8597501P ... 75
F8597502P ... 81
F8597801P ... 81
F8597803P ... 81
F8597804P ... 81
Motor Bearing
F100109P ... 69
F100124 ... 81
Motor Conversion Kit
F8353501P ... 75
F8411501 ... 75
Motor Drip Shield
F200216900 ... 75, 81
F200280700 ... 81
Motor Pulley
F280281 ... 77
Motor Retrofit Kit
F0798912-00 ... 81
Motor Support Bushing
F200186100 ... 75, 81
Motor Support Rod
F602844 ... 75
F603059 ... 75, 81
F603897 ... 81
Motor Switch
F340002 ... 21

N

Nipple
F420708 ... 83
Nut
F430211 ... 17, 19
F430215 ... 19, 41, 43, 45, 47, 51, 67, 83
F430217 ... 47
F430218 ... 67
F430225 ... 53, 55
F430231 ... 33, 53, 85
F430232 ... 13, 45, 49, 53, 55
F430233 ... 57, 59, 63
F430239 ... 69
F430240 ... 69, 71
F430243 ... 27, 29
F430264 ... 51, 53, 55, 57, 59
F431017 ... 53, 55
F431022 ... 13, 15, 17, 31, 49
F431024 ... 61, 63
F431041 ... 49
802292 ... 33

O

Optic Switch Kit
F775801-03P ... 27, 29
O-Ring
801632 ... 33
Output Board CCA
F370449P ... 17
F370450P ... 17
Output Board VCMP Assembly
F8206501P ... 19
F8206502P ... 19, 21
Output CCA
F037044860-1 ... 19, 21
Overflow Hose
F0200238-00 ... 43
F150317 ... 43
F150332 ... 41, 43
F150417 ... 43
F200125800 ... 43
Overflow Plug
F150352 ... 39, 45, 47
Overload Contactor
F8176101P ... 23
F8344001P ... 23

P

Personal Injury Warning Decal
F231065 ... 11
Pipe
F603827-1 ... 47
Pipe Insulation
F410300 ... 83
Pipe Nipple
70214101 ... 83
70435601 ... 83
Plug
F150443 ... 45, 47
F200202600 ... 83
Pop Rivet
F431215 ... 27, 29
Power Distribution Block
M413865 ... 31

N/A items do not appear in index.

© Copyright, Alliance Laundry Systems LLC – DO NOT COPY or TRANSMIT

Pressfit Upgrade Kit
F935P3 65
F936P3 65
F938P3 65
F939P3 65
F942P3 ..... 65, 71
Pressure Switch
F8134602P 17, 19, 21
Pulley
F280105P 81
F280168 73
F280173 79
F280197 79
F280284 77
F280416 77
F280422P 81
F280423 77
F280427P 77
Pulley Bushing
F280298P 77
Pump
F200000900P 47
F270104P 47
F634463P 45
Pump Drain Outlet Hose
F150482 45
Pump Drain Rear Connecting Bracket
F604147 ..... 45, 47
Pump Drain Trap Assembly
F630326P 47
Pump Drain Trap Mounting Bracket
F609694 47
Pump Drain Trap Weldment
F633819 45
Pump Inlet Hose
F634177 45
Pump Mounting Bracket
F634114 45
Push Red Button Decal
F230661 49
Pushbutton Rod
F320300 49

R

Ratchet Fastener
F0432316-00 21
RC Network Filter
F330217P 17
Rear Drain Hose
F0200239-00 43
F150311 ..... 43, 45
Rear Panel
F0636220-00P 63
F0636321-00P 63
F200022900P 63
Rear Panel Kit
F757000 63
F757001 63
F757002 63
Rear Pump Drain Hose
F150343 ..... 45, 47
Red Dot Decal
F230662 49
Reducer Bushing
F421936 ..... 83, 85
Remove Door Lock Tag
F230528 11
Replacement Filter
F270405 35
F270406 35
Resistor
F370116 31
F370117 31
Retaining Ring
F8337801 71
F8337901 71
F8344901 69
F8345001 69
Ribbon Cable
F140216P 17
F140247 ..... 19, 21
Right Side Panel
F0636135-00P 63
F0636594-00P 63
F8155501P 63
F8155701P 63
F8156601 63
F8157301P 63
F8160001 63
F8160301P 63
Rocker Switch
F340411 13
Rod
F602813-2 51
F602813-3 51

S

Screw
F0430165-00 21
F0430268-00 33
F430100 ..... 73, 79
F430103 ..... 41, 43
F430107 ..... 19, 45, 47, 63
F430108 ..... 19, 73, 79, 83
F430115 83
F430137 57
F430173 13
F430174 ..... 31, 57, 59, 61, 63
F430177 ..... 21, 33
F430179 45
F430518 67
F430519 47
F430532 49
F430533 49
F430536 51
F430903 31
F430910 47
F430916 ..... 17, 31, 51, 85
F430917 ..... 17, 19
F430925 63
F430927 73
F430928 17
F430942 67
F430948 31
F430949 67
F430956 ..... 33, 53, 55, 57, 59
F430977 ..... 53, 55
F430982 ..... 53, 55

N/A items do not appear in index.

© Copyright, Alliance Laundry Systems LLC – DO NOT COPY or TRANSMIT

F430987 67
F8535601 49
M400056 63
201415 19

Shaft Seal
F100208 69

Shaft Seal Sleeve
F8312001P 65
F8312002P 65
F8312003P 65
F8312004P 65
F8312005P 65
F8312006P 65
F8312008P 65
F8343914 65

Shaft Seal Sleeve Kit
F8343901P 65
F8343904P 65
F8343906P 65
F8343909P 65

Sheave
F0280385-00 81
H87520334 77

Sheave Kit
F280287P 81

Sheave Pulley
F280170 77
F280172 73

Shell Band Kit
F8537801 67
F8537803 67
F8537804 67

Shell Front Assembly
F0636283-00P 67
F632006P 67

Shell Front Gasket Kit
F792000 67

Shell Front Kit
F741300P 67
F741302-01 67

Shell Weldment
F063597402P 67
F0636388-00 67
F0636460-00 67
F0636555-00 67
F063659201 67
F0636601-00 ..... 83, 85
F0636700-00 ..... 83, 85
F0636704-00 ..... 83, 85
F0636747-00 ..... 83, 85
F0637054-00 ..... 83, 85
F0637659-00 67
F0637661-00 ..... 83, 85
F200195402 67
F200199700 ..... 83, 85
F8196202 ..... 83, 85
F8196204 ..... 83, 85

Side Panel
F0635981-00P 63
F0635982-00P 63
F0636299-00 63
F0636300-00P 63
F0636515-00P 63
F0636516-00P 63
F0637628-00P 63
F0637630-00P 63

Siphon Tube
F150390 33

Snap Bushing
F140938 31

Solenoid
F300124P 53

Spacer
F401206 ..... 13, 15
F431901 ..... 53, 55

Spin Rotation Decal
F230914 ..... 11, 49

Spring
F8504601 37
F8504701 39

Spring Pin
F431222 49

Standoff
F180501 ..... 19, 21
F180506 31

Steam Bracket Assembly
F601186 83

Steam Hose
F200153P 83
F200154 83

Steam Injector Tube Assembly
F8368201 83

Strainer
F270200 33

Supply Dispenser Assembly
F200202201P 33

Supply Dispenser Baffle
F150419 ..... 41, 43

Supply Dispenser Bezel
F0150503-00 33

Supply Dispenser Hose
F0200236-01 43
F8061601 43
F8071701 ..... 41, 43

Supply Dispenser Lid
F200270500 61

Supply Dispenser Standoff
F0150504-00 33

Supply Dispenser Sub-Assembly
F602374 33

Switch Clamp
F0340722-00 21

Switch Plate Decal
F230840 13

Switch Plate Sub-Assembly
F633098 13

T

Temperature Probe
F370606P 83, 85

Template
F450127 87

Terminal
F140766 31

Terminal Strip
F140738 17

Terminal Strip Insulator Decal
F140912 17

N/A items do not appear in index.

© Copyright, Alliance Laundry Systems LLC – DO NOT COPY or TRANSMIT

F140913 17
F140914 17
F140915 17
F140916 17

Timer
F0330404-00P 21

Top Cover Assembly
F063618900P 61
F063632700 61
F063652000P 61
F063659800P 61
F063664000P 61
F063771200P 61

Transformer
C000203 47
F360117P 19
F360156P 47

Transformer Mounting Bracket
F200167700 ..... 19, 47

Trim
F8679201P 51

Triple Lip Seal
F8203801 69
F8203802 ..... 69, 71
F8203803 71
F8203805 71
F8203806 71

Trunnion Kit
F747001 69
F747002 ..... 69, 71
F747003 71
F747005 71

Tubing
F606192-5 47

U

U-Bolt Clamp
F200401P 45, 47

V

Vacuum Breaker Assembly
F603031 33

Vacuum Breaker Bottom
F015033000 33

Vacuum Breaker Fill Hose
F0150340-01 ..... 41, 43

Vacuum Breaker Hose
F0200244-00 31
F0200244-01 31
F150321 43
F150340 ..... 41, 43

Vacuum Breaker Top
F0150329-00 33

Valve
F8322801P 83
F8322802 83

Valve Kit
F8379501P 83

Valve Panel Assembly
F0636138-00 63
F0636138-01 63
F0636297-00 63
F0636297-01 63
F0636521-00 63
F0636524-01 63

Valve Panel Sub-Assembly
F0636524-03 63

Valve, 3-Way
F0381736-00P 33
F0381737-00P 33
F0381738-00P 33
F0381750-00P 33
F0381765-00P 33
F0381766-00P 33
F0381769-00P 33

W

Warning Label
D500316 11

Washer
F0430348-00 63
F0431159-00 73
F430303 67
F430311 21
F430317 ..... 41, 43, 45, 67, 83
F431100 ..... 17, 19, 53, 55
F431106 13
F431108 19
F431113 ..... 13, 15, 17, 31, 49
F431115 79
F431123 ..... 53, 55
F431128 ..... 67, 69
F431131 ..... 67, 69, 71
F431147 ..... 53, 55, 61
F431902 ..... 53, 55
F431916 49
M400081 67
M405535 ..... 57, 59, 63
20290 35
803615 35
901690 ..... 47, 75, 81

Water Hose
F200108P 31
F200164 35
F200165 35
F200166 35

Water Level Switch
F0340343-10P 17, 19, 21
F0340345-10P 17, 19, 21

Water Level Switch Bracket
F631920 19

Y

Y Connector
F422808 33

N/A items do not appear in index.

© Copyright, Alliance Laundry Systems LLC – DO NOT COPY or TRANSMIT