Washer-Extractor

Cabinet Hardmount
HC80, SC80 and UC80 NetMaster, A or B Control and V-Computer

Refer to Page 5 for Model Numbers

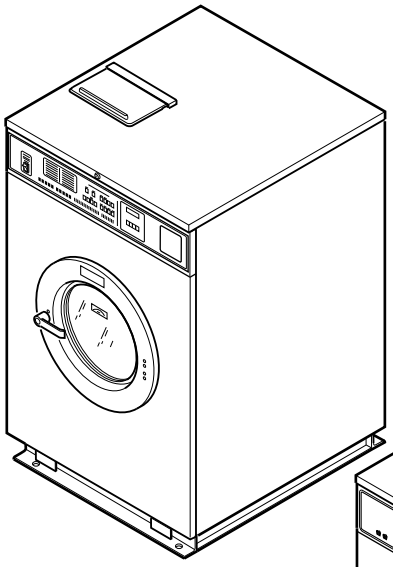

NetMaster or V-Computer

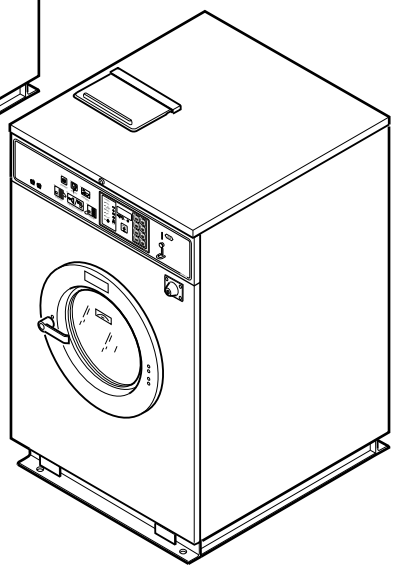

A or B Control

CHM1767C_F232193

Parts

Alliance™ Laundry Systems

www.alliancelaundry.com

Part No. F232193R20
July 2024

Table of Contents

Title	Page
Parts Ordering Information	3
Serial Plate Location	3
Model Identification	5
Product Overview for A and B-Control	6
Product Overview for NetMaster, Mechanical Timer and P, S and V-Computer	8
Decals	10
Control Module - NC, NR, NX and NY Models (Drawing 1 of 2)	12
Control Module - NC, NR, NX and NY Models (Drawing 2 of 2)	14
Control Module - VC, VN and VX Models Through 8/1/04 (Drawing 1 of 2)	16
Control Module - VC, VN and VX Models Through 8/1/04 (Drawing 2 of 2)	18
Control Module - VC, VN and VX Models Starting 8/2/04 (Drawing 1 of 2)	20
Control Module - VC, VN and VX Models Starting 8/2/04 (Drawing 2 of 2)	22
AC Drive - VC, VN and VX Models Starting 8/2/04	24
Control Panel - VC, VN and VX Models	26
Control Module - A and B Control Models Through 7/14/04	28
AC Drive Box - A and B Control Models Through 7/14/04	30
AC Drive - A and B Control Models Through 7/14/04	32
Control Module - AC, AL, AX, AY, BC, BL, BX and BY Models Starting 7/14/04	34
Control Module - AN and BN Models Starting 7/15/04	36
AC Drive Box - A and B Control Models Starting 7/15/04	38
AC Drive - A and B Control Models Starting 7/15/04	40
Coin Meter Mounting Assembly, Water Level Switch and Keypad - A and B Control Models	42
Output Board CCA, Computer, Interface CCA and Thermostat - A and B Control Models	44
Flush Mount Coin Meter Assembly - AC, AX, BC, BX, NC and NX Models; Single Drop	46
Flush Mount Coin Meter Assembly - AC, AX, BC, BX, NC and NX Models; Dual Drop	48
Electronic Coin Meter Assembly - AC, AX, BC, BX, NC and NX Models	50
Card Reader - Model SC80NRV	52
W2000 Coin Meter Assembly - VC and VX Models; Single Drop	54
W2000 Coin Meter Assembly - VC and VX Models; Dual Drop	56
Optional Coin Box	58
Control Panel Assembly and Control Panel Decals - AC, AL, AX, AY, BC, BL, BX and BY Models	60
Control Panel Assembly, Controls and Control Panel Decals - AN and BN Models	62
Control Panel Assembly and Control Panel Decals - NC, NR, NX, NY, VC and VX Models	64
Control Panel Assembly and Control Panel Decals - VN Models	66
Inner and Outer Front Panels	68
Cover Panels and Frame	70
Door	72
Door Lock - AN, BN and VN Models	74
Door Lock - AC, AL, AX, AY, BC, BL, BX and BY Models	76
Door Lock - NC, NR, NX, NY, VC and VX Models	78
Fill Plumbing and External Supply (Drawing 1 of 3)	80

© Copyright 2024, Alliance Laundry Systems LLC

All rights reserved. No part of the contents of this book may be reproduced or transmitted in any form or by any means without the expressed written consent of the publisher.

Fill Plumbing and External Supply (Drawing 2 of 3) 82
Fill Plumbing and External Supply (Drawing 3 of 3) 84
Water Supply Hose and Filter (Optional) 86
Basket and Shell 88
Drain 90
Motor, Pulley, Belts and Bearings 92
Electric Heat Option - AC, AL, AN, AX, AY, BC, BL, BN, BX and BY Models 94
Electric Heat Option - NC, NR, NX, NY, VC, VN and VX Models 96
Steam Heat Kit - AC, AL, AN, AX, AY, BC, BL, BN, BX and BY Models 98
Steam Heat Option - VC, VN and VX Models 100
Special Tools 102
Parts Index 105

© Copyright, Alliance Laundry Systems LLC – DO NOT COPY or TRANSMIT

Parts Ordering Information

If literature or replacement parts are required, contact the source from whom the machine was purchased or contact Alliance Laundry Systems at (920) 748-3121 for the name and address of the nearest authorized parts distributor.

For technical assistance, call the number listed below:

(920) 748-3121 Ripon, Wisconsin

Serial Plate Location

When calling or writing about your product, be sure to mention model and serial numbers. Model and serial numbers are located on serial plate(s) as shown.

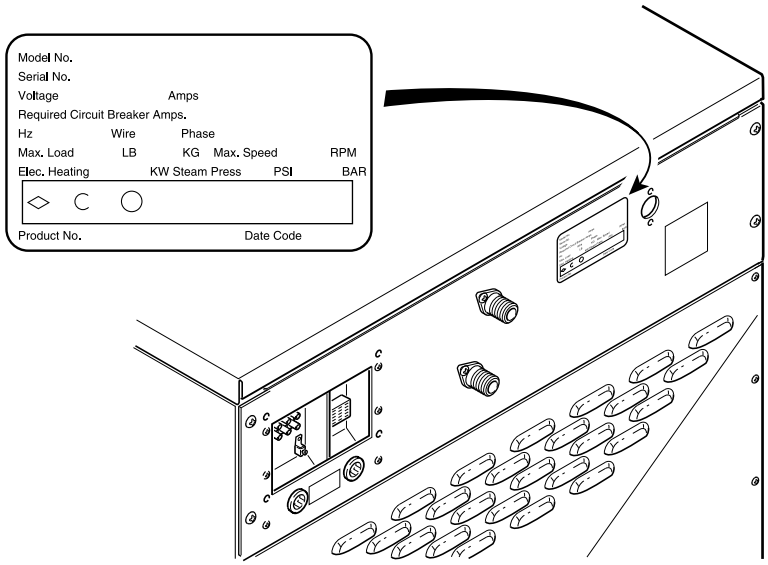

CHM2411P_F232193

© Copyright, Alliance Laundry Systems LLC – DO NOT COPY or TRANSMIT

Notes

© Copyright, Alliance Laundry Systems LLC – DO NOT COPY or TRANSMIT

Model Identification

Information in this manual is applicable to these washer-extractor models:

DC80NCV
HC80ACV
HC80ALV
HC80ANV
HC80AXV
HC80AYV
HC80BCV
HC80BLV
HC80BNV
HC80BXV
HC80BYV
HC80VCV
HC80VNV
HC80VXV

SC80ACV
SC80ALV
SC80ANV
SC80AXV
SC80AYV
SC80BCV
SC80BLV
SC80BNV
SC80BXV
SC80BYV
SC80NCV
SC80NRV
SC80NXV
SC80NYV
SC80VNV

UC80ANV
UC80BNV
UC80VNV

NOTE: This manual applies to models of design 6 only.

© Copyright, Alliance Laundry Systems LLC – DO NOT COPY or TRANSMIT

Product Overview for A and B-Control

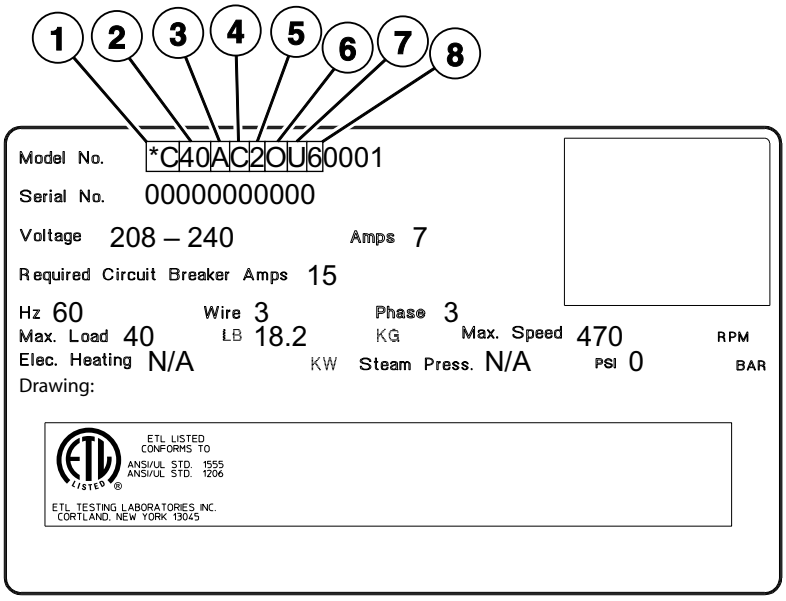

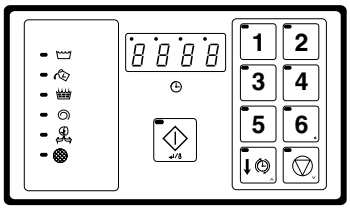

A-Control OPL

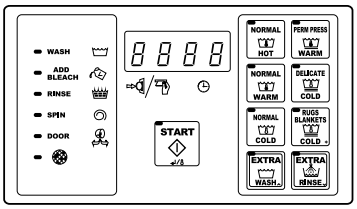

A-Control Coin (Domestic)

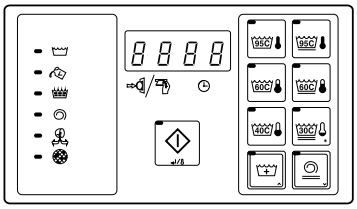

A-Control Coin (International)

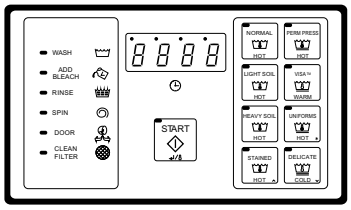

B-Control OPL (Domestic)

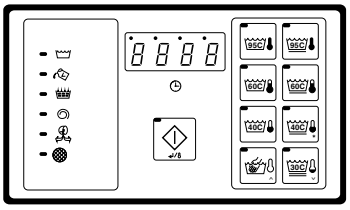

B-Control OPL (International)

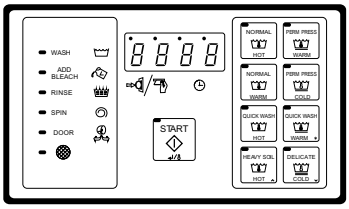

B-Control Coin (Domestic)

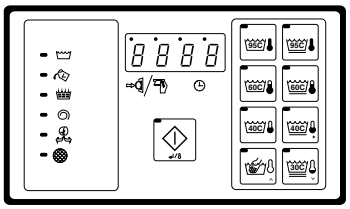

B-Control Coin (International)

CHM2976P_F232193

© Copyright, Alliance Laundry Systems LLC – DO NOT COPY or TRANSMIT

Product Overview for A and B-Control

REF	PART NO.	DESCRIPTION	COMMENTS
1	-	Product Family	DC HC NC SC UC
2	-	Capacity (Pounds)	18 20 25 27 30 35 40 50 60 80 100 125
3	-	Control	A (A-Control) B (B-Control)
4	-	Actuation	C (Drop Coin Meter) D (Digital Coin Meter) L (Prep for Remote/Central Pay) N (Non-Coin - OPL) R (Cardmate Plus II) X (Prep for Coin Meter) Y (Prep for Card Reader)
5	-	Speed	2 (2-Speed) 3 (3-Speed) F (F-Speed) V (Variable Speed)
6	-	Voltage	B (120/60/1/2) C (380-415/50/3/4) D (220-240/50/3/3) E (220-240/50/1/2) F (440-480/60/3/3) J (220/50/3/3) N (440-480/50-60/3/3) O (200-240/60/3/3) P (380-415/50-60/3/3) Q (200-240/50-60/3/3) X (200-240/50-60/1/3) Y (208-240/60/1/2)
7	-	Side Panel	N (Network Board Installed) P (Network Adaptable) U (Standard Specs) 1 (Stainless Steel) 2 (Network Board Installed with Stainless Sides) 3 (Network Adaptable with Stainless Sides)
8	-	Design	1-4 and 6

© Copyright, Alliance Laundry Systems LLC – DO NOT COPY or TRANSMIT

Product Overview for NetMaster, Mechanical Timer and P, S and V-Computer

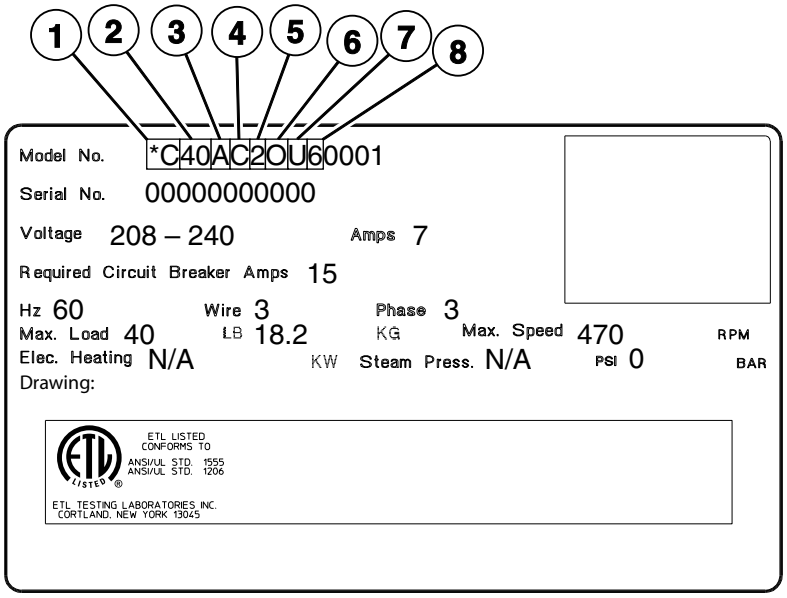

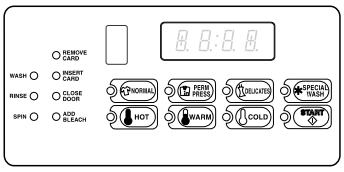

NetMaster

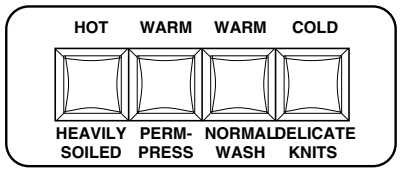

Mechanical Timer

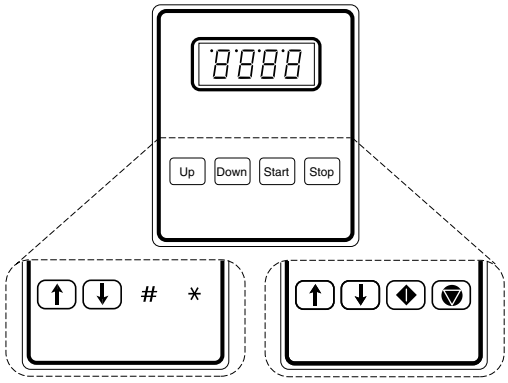

P, S and V-Computer

CHM2977P_F232193

© Copyright, Alliance Laundry Systems LLC – DO NOT COPY or TRANSMIT

Product Overview for NetMaster, Mechanical Timer and P, S and V-Computer

REF	PART NO.	DESCRIPTION	COMMENTS
1	-	Product Family	DC HC NC SC UC
2	-	Capacity (Pounds)	18 20 25 27 30 35 40 50 60 80 100 125
3	-	Control	M (Mechanical Timer) N (NetMaster) P (P-Computer) S (S-Computer) V (V-Computer)
4	-	Actuation	C (Drop Coin Meter) D (Digital Coin Meter) L (Prep for Remote/Central Pay) N (Non-Coin - OPL) R (Cardmate Plus II) X (Prep for Coin Meter) Y (Prep for Card Reader)
5	-	Speed	2 (2-Speed) 3 (3-Speed) F (F-Speed) V (Variable Speed)
6	-	Voltage	B (120/60/1/2) C (380-415/50/3/4) D (220-240/50/3/3) E (220-240/50/1/2) F (440-480/60/3/3) J (220/50/3/3) N (440-480/50-60/3/3) O (200-240/60/3/3) P (380-415/50-60/3/3) Q (200-240/50-60/3/3) X (200-240/50-60/1/3) Y (208-240/60/1/2)
7	-	Side Panel	N (Network Board Installed) P (Network Adaptable) U (Standard Specs) 1 (Stainless Steel) 2 (Network Board Installed with Stainless Sides) 3 (Network Adaptable with Stainless Sides)
8	-	Design	1-4 and 6

© Copyright, Alliance Laundry Systems LLC – DO NOT COPY or TRANSMIT

Decals

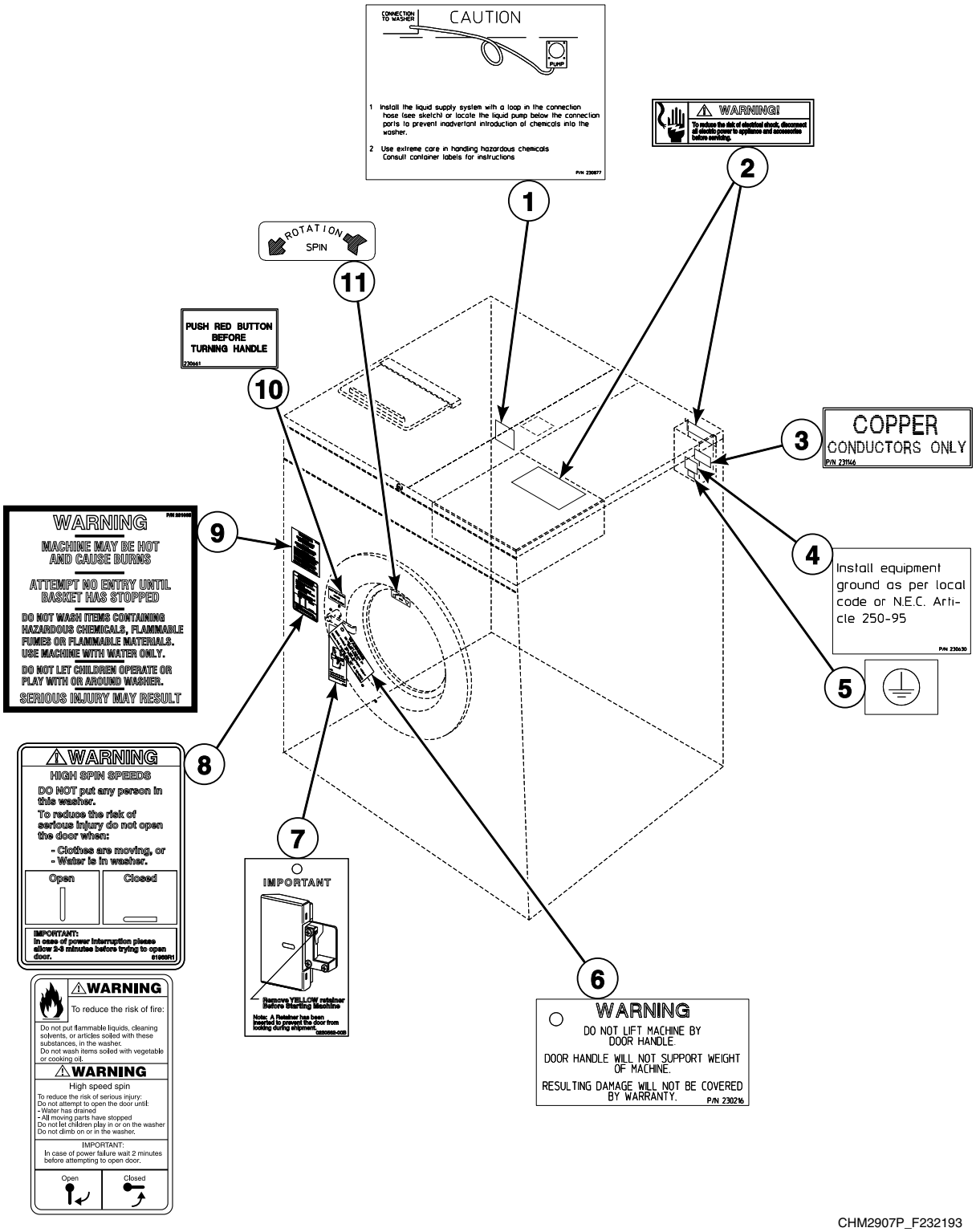

CHM2907P_F232193

© Copyright, Alliance Laundry Systems LLC – DO NOT COPY or TRANSMIT

Decals

REF	PART NO.	DESCRIPTION	COMMENTS
1	F230877	Liquid Supply Decal	Models HC80ANV, HC80BNV, HC80VNV, SC80ANV, SC80BNV, SC80VNV, UC80ANV, UC80BNV and UC80VNV
2	D500316	Warning Label	
3	F231146	Conductor Decal	
4	F230630	Ground Decal	
5	F230739	Ground Decal	
6	F230216	Do Not Lift Decal	
7	F230528	Remove Door Lock Tag	Models HC80ANV, HC80BNV, HC80VNV, SC80ANV, SC80BNV, SC80VNV, UC80ANV, UC80BNV and UC80VNV
8	81968	Door Warning Label	Models DC80NCV, HC80VCV, HC80VNV, HC80VXV, SC80NCV, SC80NRV, SC80NXV, SC80NYV, SC80VNV and UC80VNV
	F200284600	Do Not Open Warning Decal	Models HC80ACV, HC80ALV, HC80ANV, HC80AXV, HC80AYV, HC80BCV, HC80BLV, HC80BNV, HC80BXV, HC80BYV, SC80ACV, SC80ALV, SC80ANV, SC80AXV, SC80AYV, SC80BCV, SC80BLV, SC80BNV, SC80BXV, SC80BYV, UC80ANV and UC80BNV
9	F231065	Personal Injury Warning Decal	
10	F230661	Push Red Button Decal	
11	F230693	Counterclockwise Spin Rotation Decal	

© Copyright, Alliance Laundry Systems LLC – DO NOT COPY or TRANSMIT

Control Module - NC, NR, NX and NY Models (Drawing 1 of 2)

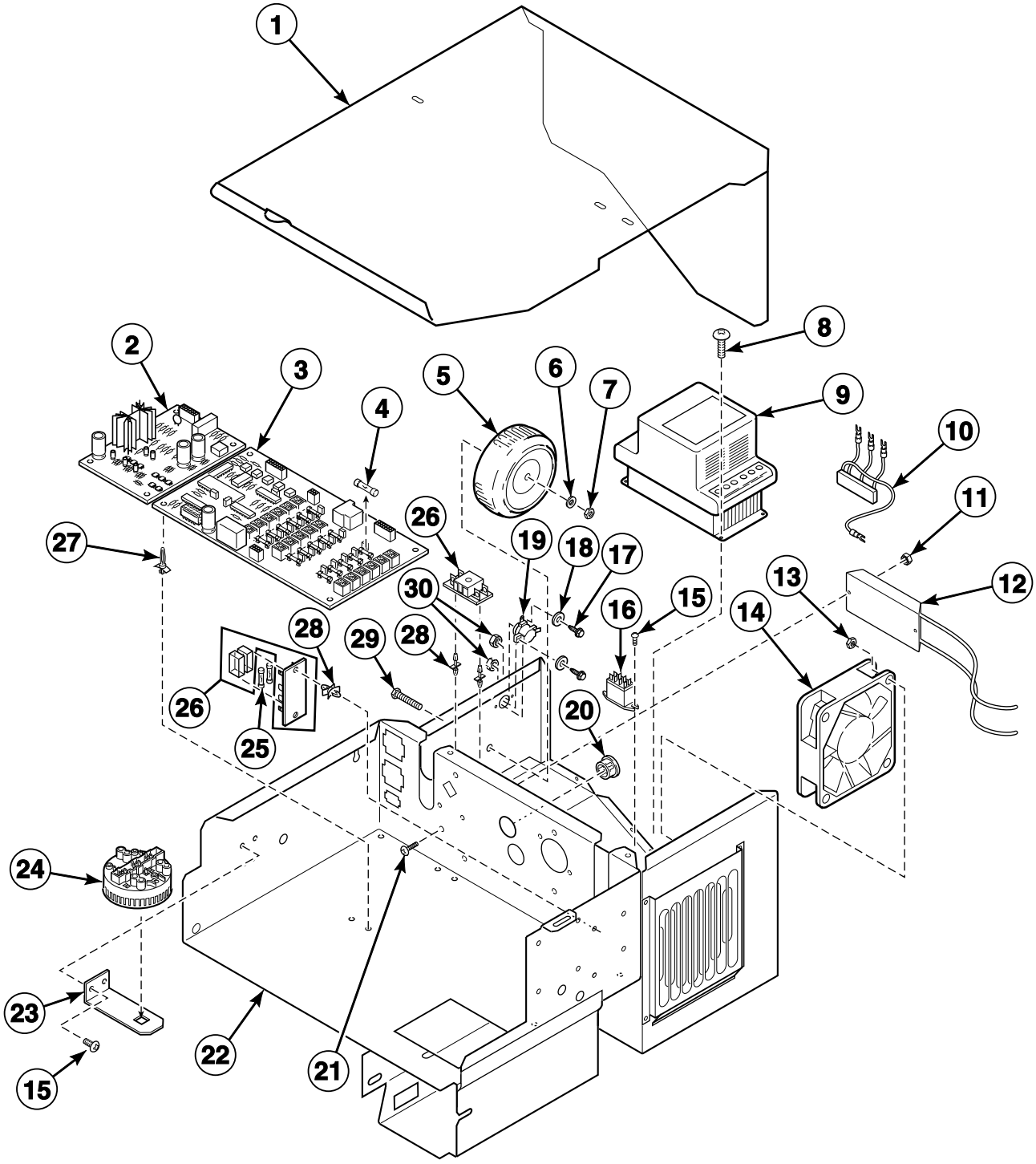

© Copyright, Alliance Laundry Systems LLC – DO NOT COPY or TRANSMIT

Control Module - NC, NR, NX and NY Models (Drawing 1 of 2)

REF	PART NO.	DESCRIPTION	COMMENTS
	F0360160-00P	Line Reactor Kit	Use with F370843 Inverter Drive
	F0360167-00P	Line Reactor Kit	Use with F370844 Inverter Drive
1	N/A	Module Box Cover	
2	F370432P	Door Lock Control CCA	
3	F370433P	Output Relay CCA	
4	F350142	Fuse	
5	F0360170-00P	Transformer	24 Volt
6	F431137	Washer	
7	F430215	Nut	
8	F430916	Screw	
9	F370843	Inverter Drive	160 series; 200 Volt
	F370844	Inverter Drive	160 series; 400 Volt
10	F200320900	AC Drive Radio Filter Assembly	
11	F431016	Nut	
12	F8080001P	AC Drive Resistor Assembly	200 Volt
	F8079901P	AC Drive Resistor Assembly	400 Volt
13	F430231	Nut	
14	F110110	Muffin Fan	
15	N/A	Screw	
16	M412534	Relay	
17	F430928	Screw	
18	F431113	Washer	
19	F290115	Thermostat	Models through 7/20/04
	F0290116-00	Thermostat	Models starting 7/21/04
20	F140909	Insulator Bushing	
21	F430909	Screw	
22	N/A	Control Box Assembly	
23	F631920	Water Level Switch Bracket	
24	F0340351-10P	Water Level Switch	
25	F350110	Fuse	1 Amp
	F350145	Fuse	1.6 Amp
	F350115	Fuse	3 Amp
	F350146	Fuse	5 Amp
26	F0350312-10	Fuse Holder	
27	F180501	Standoff	
28	F180506	Standoff	
29	F430996	Screw	
30	F431022	Nut	

N/A = Part no longer available

© Copyright, Alliance Laundry Systems LLC – DO NOT COPY or TRANSMIT

Control Module - NC, NR, NX and NY Models (Drawing 2 of 2)

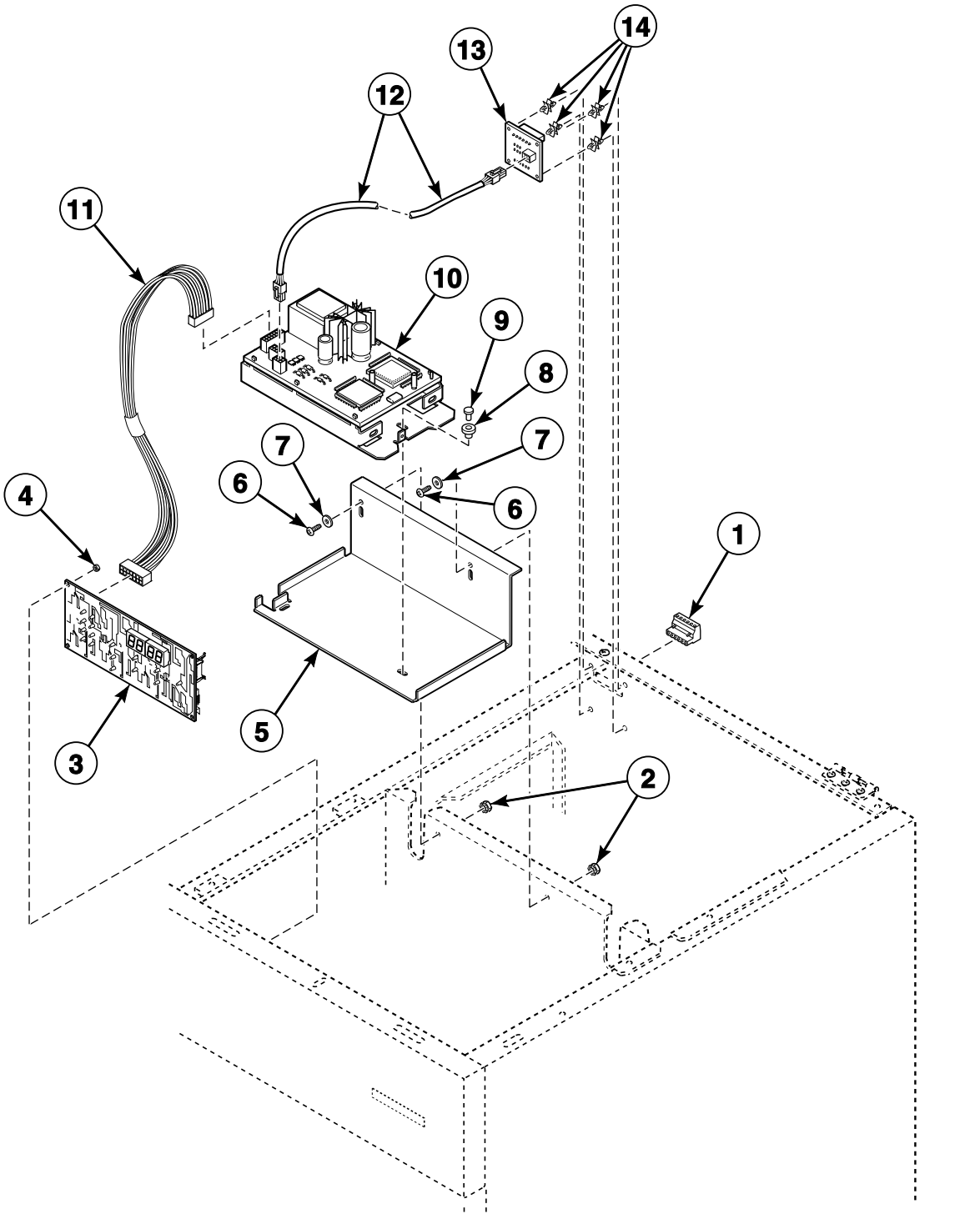

CHM2314P_F232193

© Copyright, Alliance Laundry Systems LLC – DO NOT COPY or TRANSMIT

Control Module - NC, NR, NX and NY Models (Drawing 2 of 2)

REF	PART NO.	DESCRIPTION	COMMENTS
1	210099	Communication Connector	
2	F430232	Nut	
3	F160203P	Logic Control Assembly	
4	F431017	Nut	
5	F634769	Network Interface Control Mounting Bracket	
6	F430903	Screw	
7	F430311	Washer	
8	F170607	Grommet	
9	F432005	Rivet	
10	210016P	Network Board Assembly	
11	F141886	Network Board Harness	
12	F141888-2	Network Interface Harness	
13	210095P	Communication Board	
14	F180506	Standoff	

© Copyright, Alliance Laundry Systems LLC – DO NOT COPY or TRANSMIT

Control Module - VC, VN and VX Models Through 8/1/04 (Drawing 1 of 2)

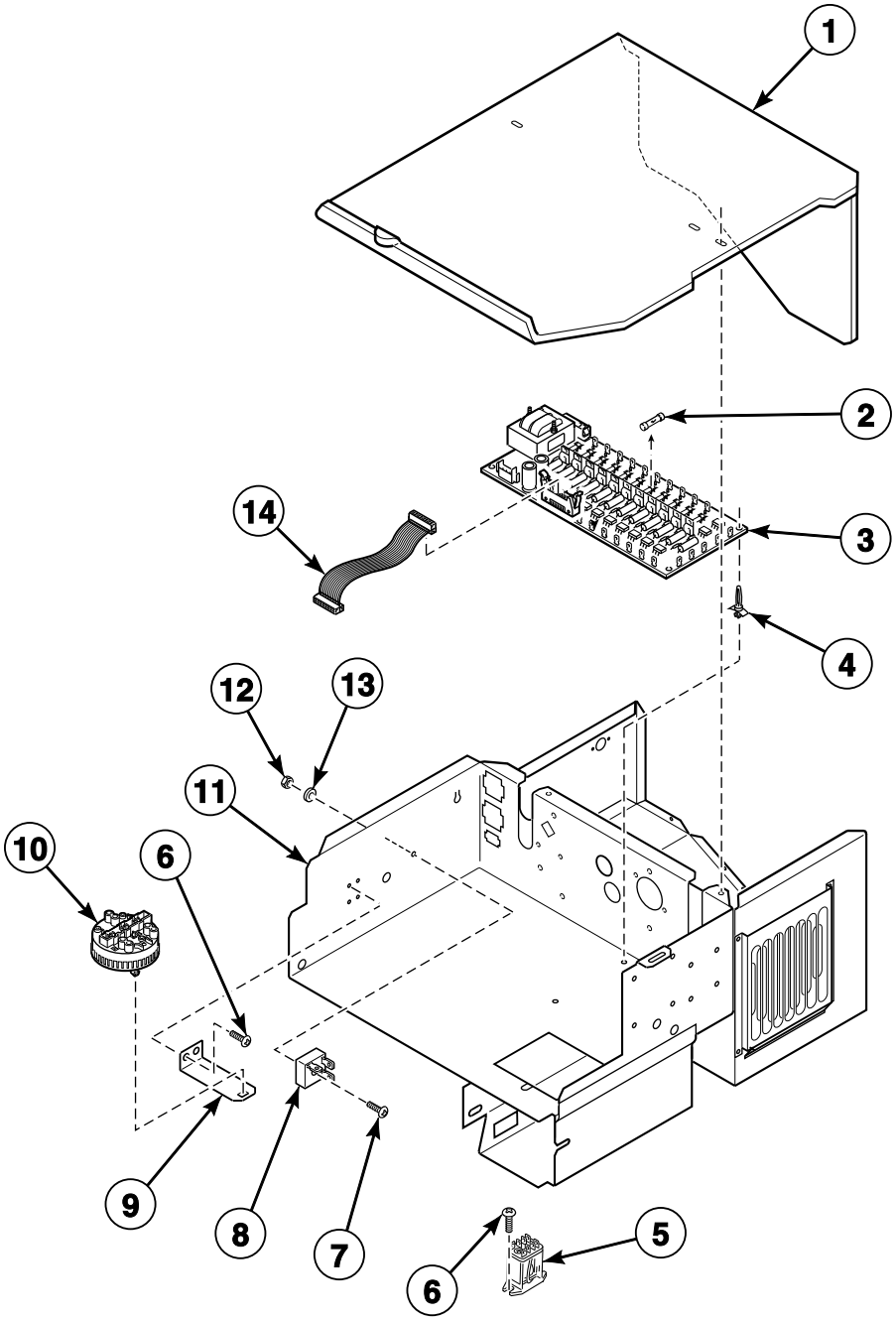

CHM2114P_F232193

© Copyright, Alliance Laundry Systems LLC – DO NOT COPY or TRANSMIT

Control Module - VC, VN and VX Models Through 8/1/04 (Drawing 1 of 2)

REF	PART NO.	DESCRIPTION	COMMENTS
	F200296000P	Computer and Door Lock Harness	Use with F037044860-1 Output CCA
1	N/A	Module Box Cover	
2	F350110	Fuse	1 Amp
	F350109	Fuse	.5 Amp
	F350108	Fuse	.125 Amp
3	F8206501P	Output Board VCMP Assembly	VC and VX models; VN models through 7/21/04
	F037044860-1	Output CCA	VN models starting 7/22/04
4	F180501	Standoff	
5	F330227	Flange Relay	
6	N/A	Screw	
7	F430916	Screw	
8	F370310	Bridge Rectifier	
9	F631920	Water Level Switch Bracket	
10	F0340351-10P	Water Level Switch	
	F8223001P	Water Pressure Switch	Heat safety
11	N/A	Control Box Assembly	Models HC80VCV and HC80VXV
	F0637033-01	Control Box Assembly	Models HC80VNV, SC80VNV and UC80VNV
12	F430232	Nut	
13	901690	Washer	
14	F140216P	Ribbon Cable	16 pin; 6 inch; Connects the output board cca to the microcomputer

N/A = Part no longer available

© Copyright, Alliance Laundry Systems LLC – DO NOT COPY or TRANSMIT

Control Module - VC, VN and VX Models Through 8/1/04 (Drawing 2 of 2)

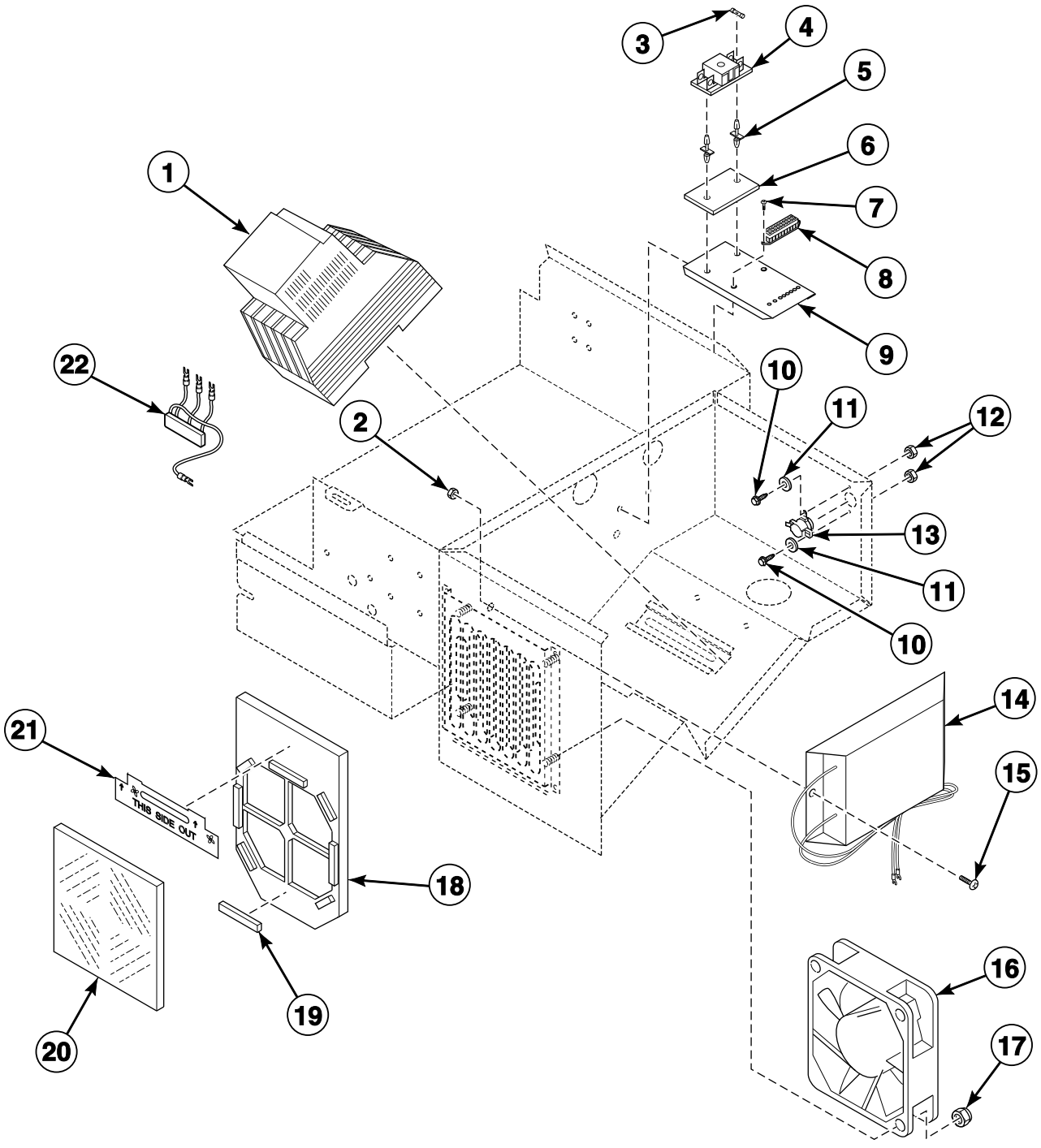

CHM2730P_F232193

© Copyright, Alliance Laundry Systems LLC – DO NOT COPY or TRANSMIT

Control Module - VC, VN and VX Models Through 8/1/04 (Drawing 2 of 2)

REF	PART NO.	DESCRIPTION	COMMENTS
	F0360160-00P	Line Reactor Kit	Use with F370843 Inverter Drive
	F0360167-00P	Line Reactor Kit	Use with F370844 Inverter Drive
1	F370843	Inverter Drive	160 series; 200 Volt
	F370844	Inverter Drive	160 series; 400 Volt
2	F431016	Nut	
3	F350110	Fuse	1 Amp
	M413867	Fuse	2 Amp
4	F0350312-10	Fuse Holder	
5	F180501	Standoff	
6	F231393	Fuse Decal	1 Amp
	F231394	Fuse Decal	2 Amp
7	N/A	Screw	
8	F140768	Terminal	
9	F633322	Fuse Terminal Mounting Bracket	
10	F430928	Screw	
11	F431113	Washer	
12	F431022	Nut	
13	F290115	Thermostat	Models through 7/20/04
	F0290116-00	Thermostat	Models starting 7/21/04
14	F8080001P	AC Drive Resistor Assembly	200 Volt; Models starting 11/11/99
	F8079901P	AC Drive Resistor Assembly	400 Volt; Models starting 11/11/99
15	F430909	Screw	
16	F110106	Muffin Fan	
17	F431016	Nut	
18	F633321	Cooling Fan Filter Slide	
19	F140639	Velcro	
20	F0270321-00P	Filter	
21	F231377	Filter Handle Decal	
22	F200320900	AC Drive Radio Filter Assembly	

N/A = Part no longer available

© Copyright, Alliance Laundry Systems LLC – DO NOT COPY or TRANSMIT

Control Module - VC, VN and VX Models Starting 8/2/04 (Drawing 1 of 2)

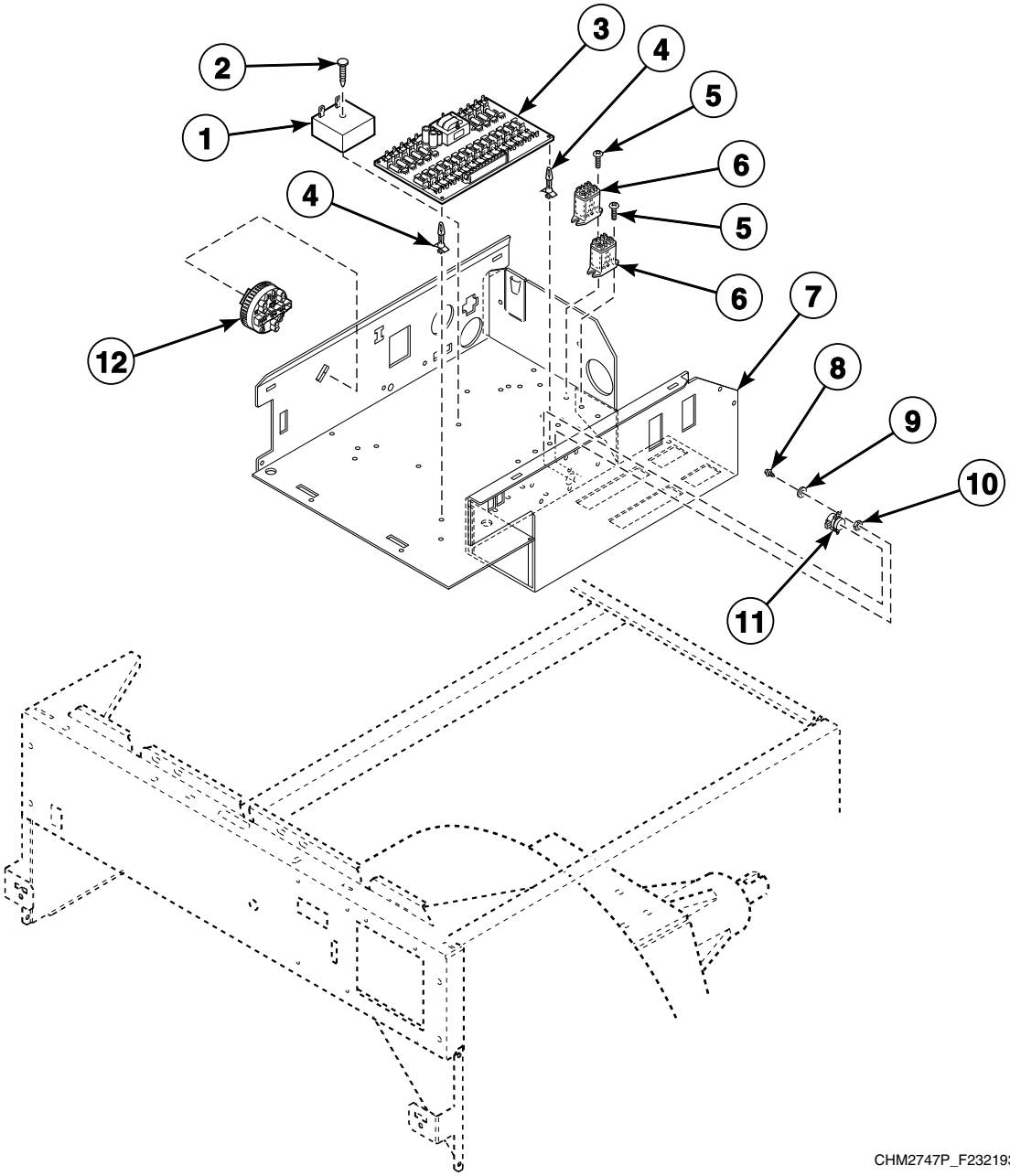

© Copyright, Alliance Laundry Systems LLC – DO NOT COPY or TRANSMIT

Control Module - VC, VN and VX Models Starting 8/2/04 (Drawing 1 of 2)

REF	PART NO.	DESCRIPTION	COMMENTS
	F200296000P	Computer and Door Lock Harness	Use with F037044860-1 Output CCA
1	F0330404-00P	Timer	Models HC80VCV and HC80VXV; Models HC80VNV, SC80VNV and UC80VNV through 2/10/05
2	F0432316-00	Ratchet Fastener	Models HC80VCV and HC80VXV; Models HC80VNV, SC80VNV and UC80VNV through 2/10/05
3	F8206502P	Output Board VCMP Assembly	Models HC80VCV and HC80VXV
	F037044860-1	Output CCA	Models HC80VNV, SC80VNV and UC80VNV
	F350110	Fuse	1.25 Amp
	F350109	Fuse	.5 Amp
	F350108	Fuse	.125 Amp
4	F180501	Standoff	
5	F0430165-00	Screw	Models HC80VCV and HC80VXV; Models HC80VNV, SC80VNV and UC80VNV through 2/10/05
6	F330230	Flange Relay	Models HC80VCV and HC80VXV; Models HC80VNV, SC80VNV and UC80VNV through 2/10/05
7	F200100102	Module Box Assembly	Models HC80VCV and HC80VXV
	F200100103	Module Box Assembly	Models HC80VNV, SC80VNV and UC80VNV
8	F430928	Screw	
9	F431113	Washer	
10	F431022	Nut	
11	F0290116-00	Thermostat	
12	F0340351-10P	Water Level Switch	
	F8223001P	Water Pressure Switch	Heat safety

© Copyright, Alliance Laundry Systems LLC – DO NOT COPY or TRANSMIT

Control Module - VC, VN and VX Models Starting 8/2/04 (Drawing 2 of 2)

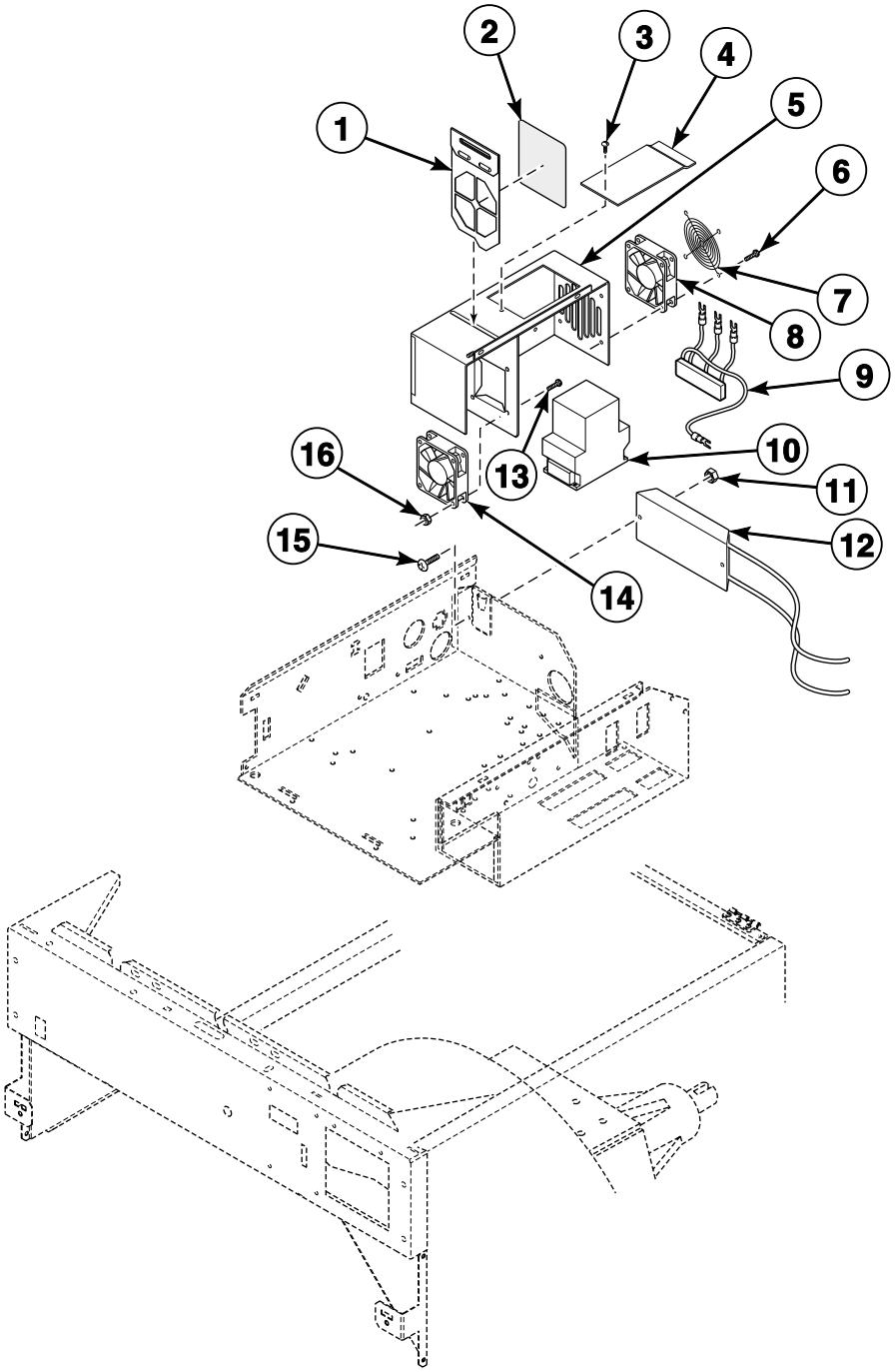

CHM2731P_F232193

© Copyright, Alliance Laundry Systems LLC – DO NOT COPY or TRANSMIT

Control Module - VC, VN and VX Models Starting 8/2/04 (Drawing 2 of 2)

REF	PART NO.	DESCRIPTION	COMMENTS
	F0360160-00P	Line Reactor Kit	Use with F370843 Inverter Drive
	F200146800P	AC Drive Cover Assembly	Includes items 1, 3-8, 13, 14 and 16
1	F8026401P	Air Filter Assembly	Includes item 2, F431377 Filter Handle Decal and F140639 Velcro
2	F0270321-00P	Filter	
3	F430174	Screw	
4	F200181500	Display Window Cover	
5	F200100201	AC Drive Cover Assembly	
6	F430922	Screw	
7	F0220922-00	Fan Guard	
8	F110110	Muffin Fan	
9	F200320900	AC Drive Radio Filter Assembly	
10	F370843	Inverter Drive	
11	F431016	Nut	
12	F8080001P	AC Drive Resistor Assembly	200 Volt
	F8079901P	AC Drive Resistor Assembly	400 Volt
13	F430916	Screw	
14	F110105	Muffin Fan	
15	F430909	Screw	
16	F430231	Nut	

© Copyright, Alliance Laundry Systems LLC – DO NOT COPY or TRANSMIT

AC Drive - VC, VN and VX Models Starting 8/2/04

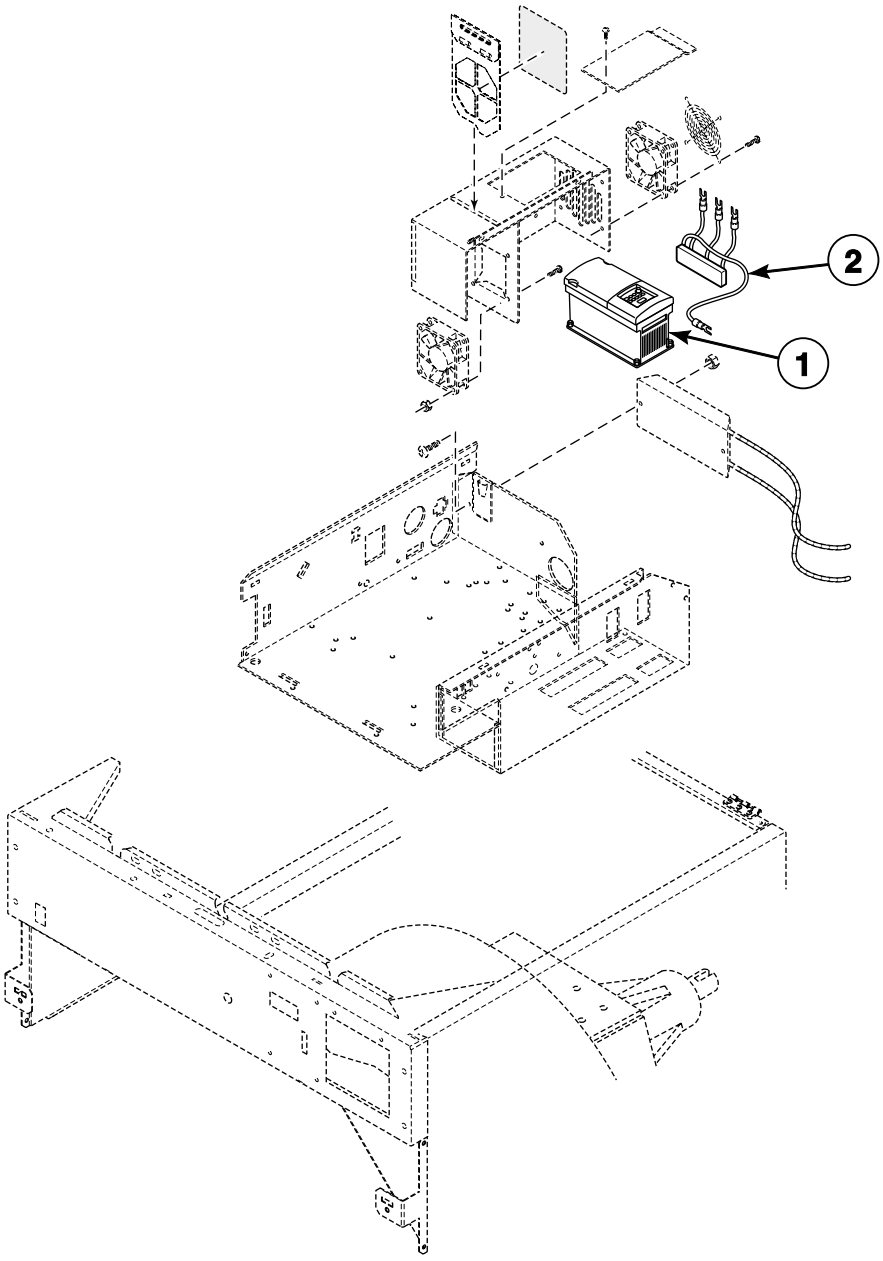

CHM3012P_F232193

© Copyright, Alliance Laundry Systems LLC – DO NOT COPY or TRANSMIT

AC Drive - VC, VN and VX Models Starting 8/2/04

REF	PART NO.	DESCRIPTION	COMMENTS
	F8172806	160-Series to PowerFlex 40 Drive Kit	Models HC80VCV and HC80VXV with 160-series drive; Q-voltage; Includes AC Drive F8169416
	F8172808	160-Series to PowerFlex 40 Drive Kit	Models HC80VNV, SC80VNV and UC80VNV with 160-series drive; Q-voltage; Includes AC Drive F8169417
	F8172904	160-Series to PowerFlex 40 Drive Kit	Models HC80VNV, SC80VNV and UC80VNV with 160-series drive; N and P-voltage; Includes AC Drive F8169418
1	F8169416	PowerFlex 40 Drive	Models HC80VCV and HC80VXV that have been retrofitted with F8172806 160-Series to PowerFlex 40 Drive Kit; Q-voltage
	F8169417	PowerFlex 40 Drive	Models HC80VNV, SC80VNV and UC80VNV that have been retrofitted with F8172808 160-Series to PowerFlex 40 Drive Kit; Q-voltage
	F8169418	PowerFlex 40 Drive	Models HC80VNV, SC80VNV and UC80VNV that have been retrofitted with F8172904 160-Series to PowerFlex 40 Drive Kit; N and P-voltage
2	F200320900	AC Drive Radio Filter Assembly	

© Copyright, Alliance Laundry Systems LLC – DO NOT COPY or TRANSMIT

Control Panel - VC, VN and VX Models

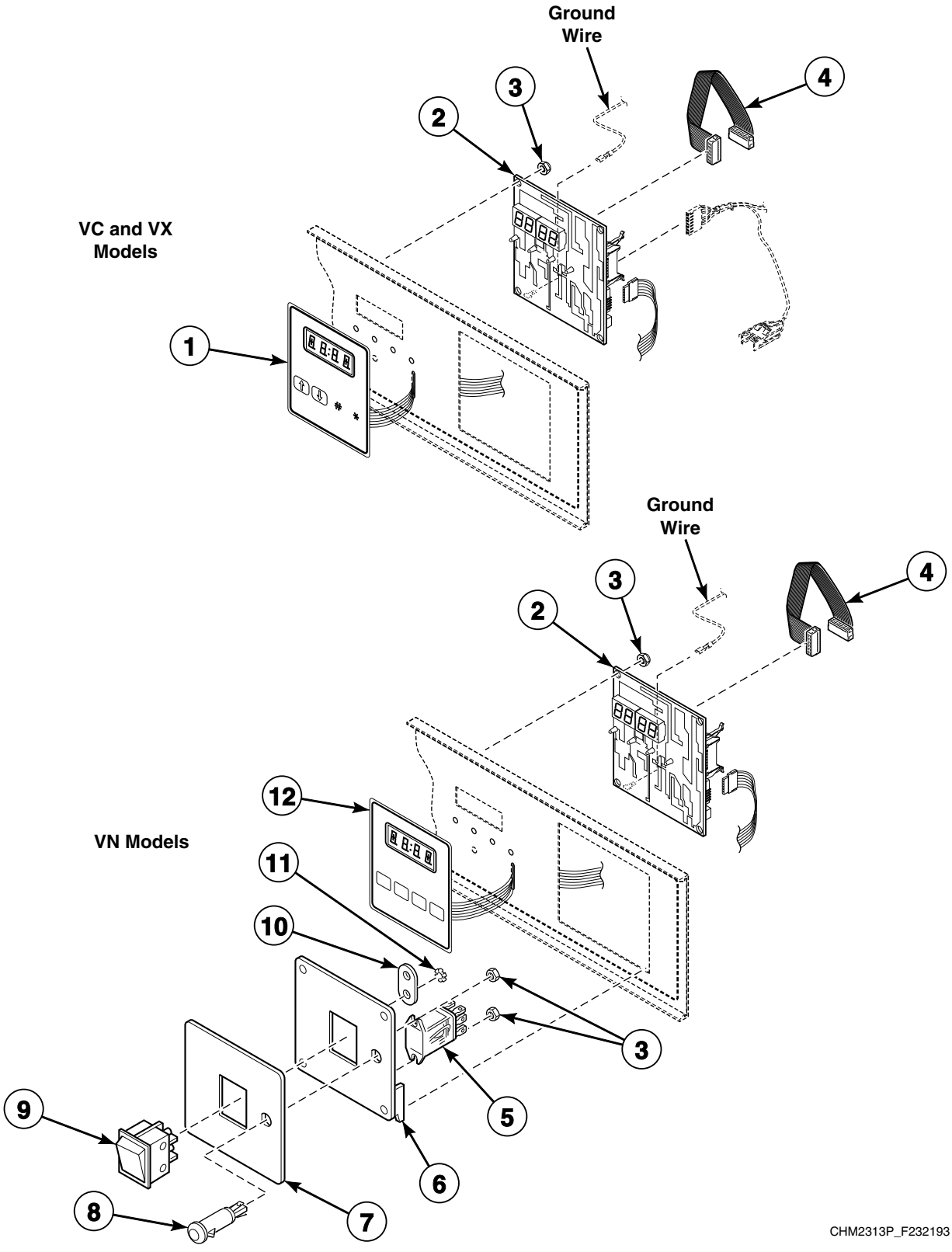

© Copyright, Alliance Laundry Systems LLC – DO NOT COPY or TRANSMIT

Control Panel - VC, VN and VX Models

REF	PART NO.	DESCRIPTION	COMMENTS
1	F340615P	Membrane Switch	Models HC80VCV, HC80VNV and HC80VXV
	F340605P	Membrane Switch	Models SC80VNV and UC80VNV
	F340616P	Membrane Switch	Clean Rite
2	F370313-13P	Microcomputer	Models HC80VNV, SC80VNV and UC80VNV
	F370313-50P	Microcomputer	Models HC80VCV and HC80VXV
3	F430231	Nut	
4	F140215	Ribbon Cable	Connects the microcomputer to the output board cca
5	F330227	Flange Relay	Models through 8/1/04; 120 Volt
	F330230	Flange Relay	Models starting 8/2/04; 220 Volt
6	F633540	Switch Mounting Plate Sub-Assembly	
7	F231449	Switch Panel Decal	Models HC80VCV, HC80VNV and HC80VXV
	F231381	Switch Panel Decal	Models SC80VNV and UC80VNV
8	F350411	Light	Clean filter; Models through 8/1/04; 120 Volt
	F350413	Light	Clean filter; Models starting 8/2/04; 220 Volt
9	F340411	Rocker Switch	
10	F601515	Clip	
11	F430232	Nut	
12	F340614P	Membrane Switch	Models HC80VCV, HC80VNV and HC80VXV
	F340608P	Membrane Switch	Model SC80VNV
	F370576P	Keypad	Model UC80VNV

© Copyright, Alliance Laundry Systems LLC – DO NOT COPY or TRANSMIT

Control Module - A and B Control Models Through 7/14/04

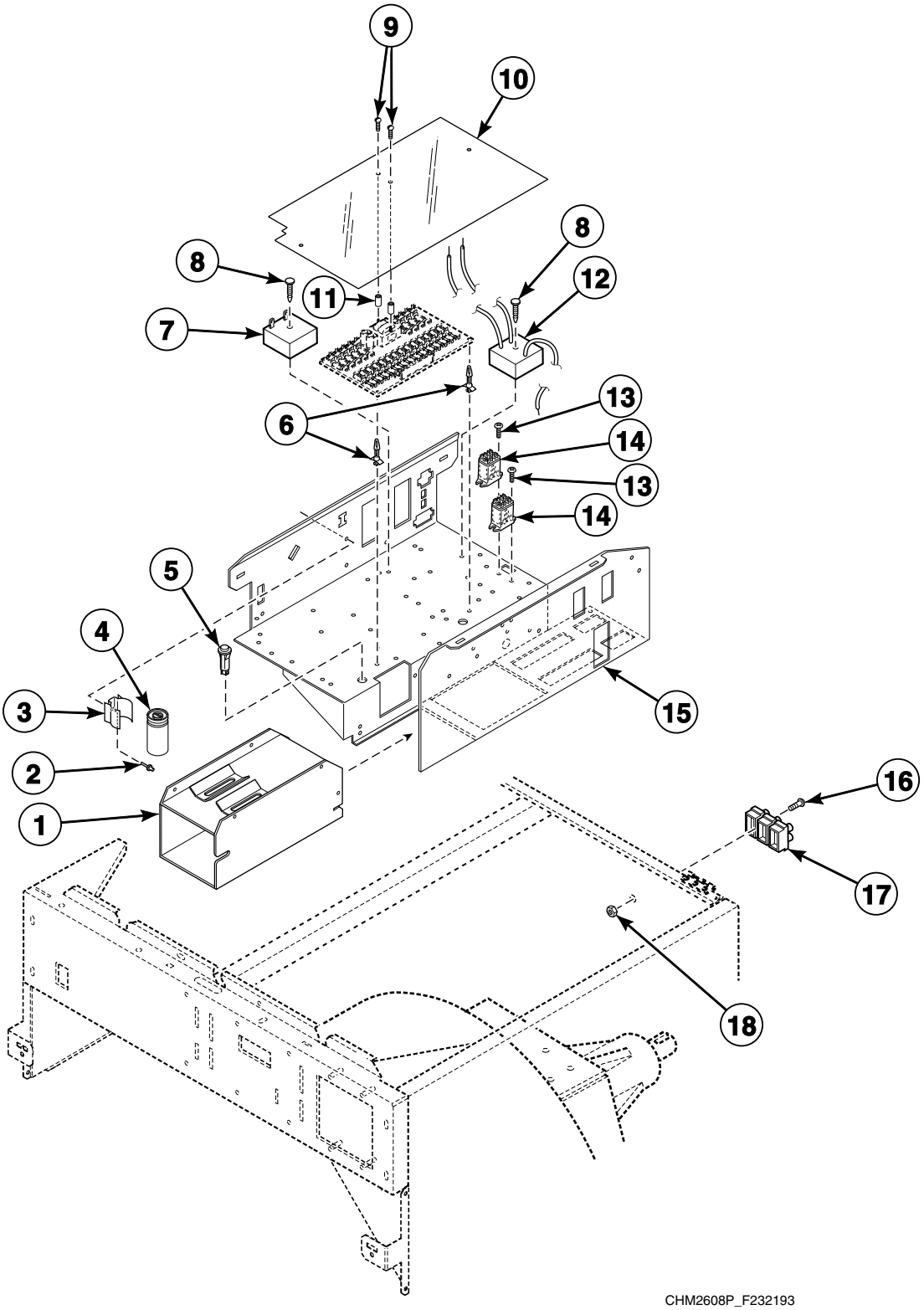

© Copyright, Alliance Laundry Systems LLC – DO NOT COPY or TRANSMIT

Control Module - A and B Control Models Through 7/14/04

REF	PART NO.	DESCRIPTION	COMMENTS
1	F0637138-00	Coin Box Cover Assembly	Models through 8/15/02
	F0637455-00	Coin Box Assembly	Models starting 8/16/02
2	F431215	Pop Rivet	
3	F0320211-00	Capacitor Mounting Bracket	
4	F370225P	Capacitor	
	F0140941-00	Tubing	Order 1 foot
5	F350404	Signal Light	Red
6	F180501	Standoff	
7	F0330404-00P	Timer	
8	F0432316-00	Ratchet Fastener	
9	F431702	Screw	
10	F0170427-00	Output Board Cover	
11	F431806	Nut	
12	F200296100P	Time Delay Assembly	
13	F0430165-00	Screw	
14	F330230	Flange Relay	
15	F0636185-01	Module Box Tray	
16	F430938	Screw	Used with F140748, F140747 and F140746 Input Power Block
	F430903	Screw	Used with F0140795-00, F0140798-00 and F0140799-00 Input Block
17	F140747	Input Power Block	3 terminal; AC, AL, AX, AY, BC, BL, BX and BY models
	F0140798-00P	Input Block	3 terminal; BN models; AC, AL, AX, AY, BC, BL, BX and BY models with heat
18	F430231	Nut	Used with F140747 Input Power Block
	F430232	Nut	Used with F0140798-00 Input Block

© Copyright, Alliance Laundry Systems LLC – DO NOT COPY or TRANSMIT

AC Drive Box - A and B Control Models Through 7/14/04

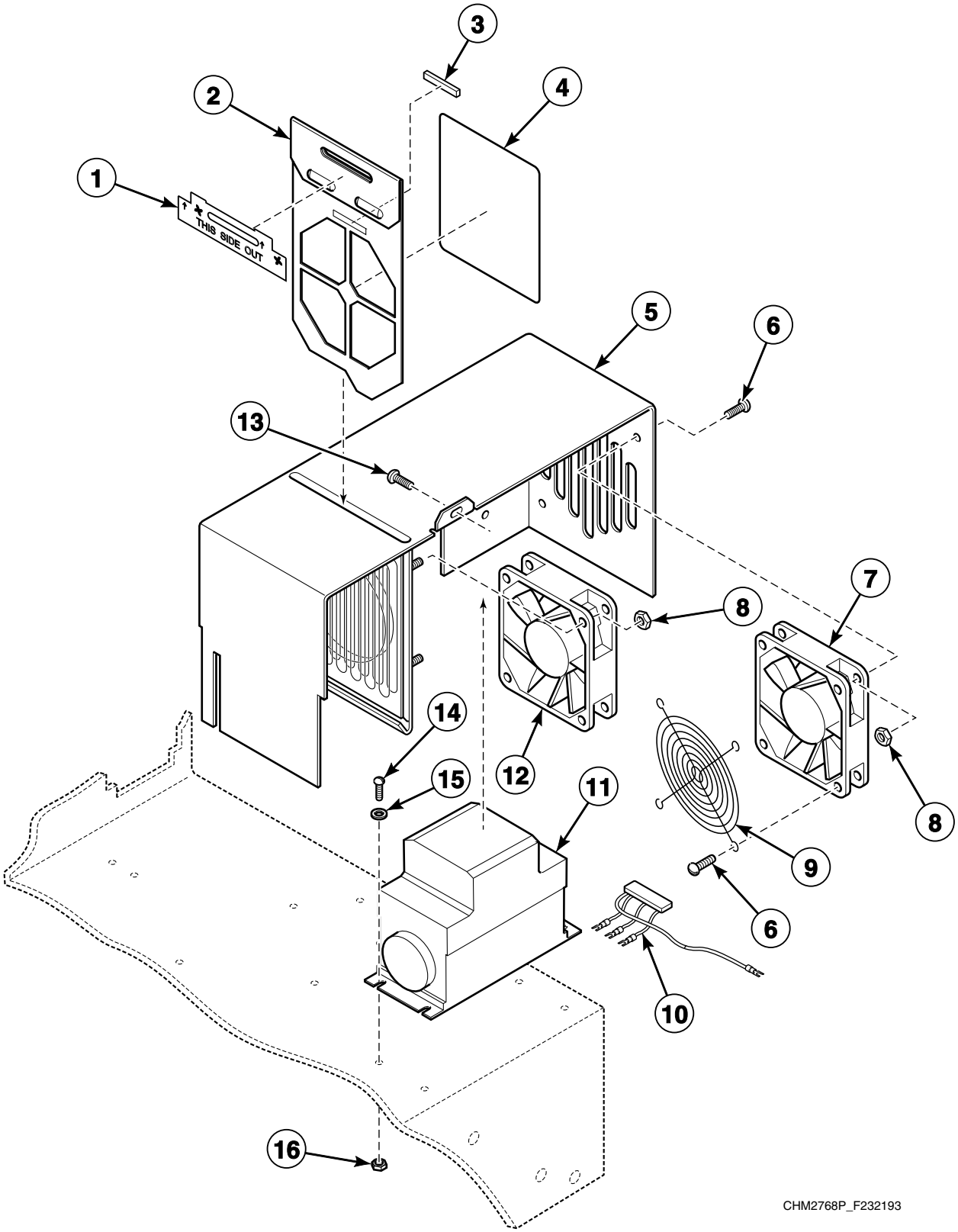

© Copyright, Alliance Laundry Systems LLC – DO NOT COPY or TRANSMIT

AC Drive Box - A and B Control Models Through 7/14/04

REF	PART NO.	DESCRIPTION	COMMENTS
	F0360160-00P	Line Reactor Kit	Use with F370843 Inverter Drive
	F0360167-00P	Line Reactor Kit	Use with F370844 Inverter Drive
	F0636888-00	AC Drive Cover Assembly	Includes items 2, 5-9 and 12
1	F231377	Filter Handle Decal	
2	F633321	Cooling Fan Filter Slide	
3	F140639	Velcro	
4	F0270321-00P	Filter	
5	N/A	AC Drive Cover Sub-Assembly	
6	F430916	Screw	
7	F110110	Muffin Fan	
8	F430231	Nut	
9	F0220922-00	Fan Guard	
10	F200320900	AC Drive Radio Filter Assembly	
11	F370843	Inverter Drive	200 Volt
	F370844	Inverter Drive	400 Volt
12	F110105	Muffin Fan	
13	F430174	Screw	
14	F8535601	Screw	
15	F431133	Washer	
16	F430232	Nut	

N/A = Part no longer available

© Copyright, Alliance Laundry Systems LLC – DO NOT COPY or TRANSMIT

AC Drive - A and B Control Models Through 7/14/04

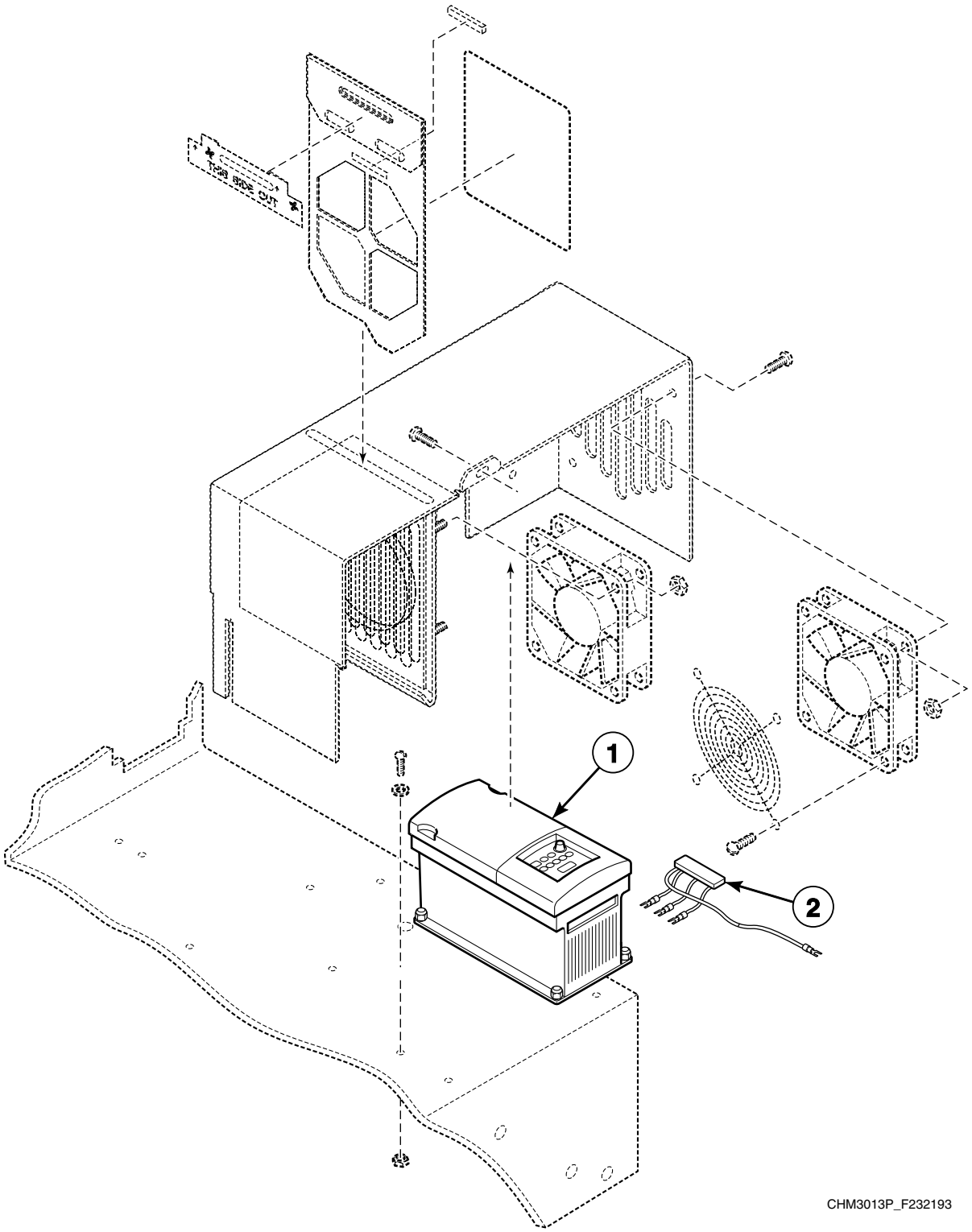

© Copyright, Alliance Laundry Systems LLC – DO NOT COPY or TRANSMIT

AC Drive - A and B Control Models Through 7/14/04

REF	PART NO.	DESCRIPTION	COMMENTS
	F8172805	160-Series to PowerFlex 40 Drive Kit	HC80 and SC80 vended models with 160-series drive; Q-voltage; Includes AC Drive F8169416
	F8172807	160-Series to PowerFlex 40 Drive Kit	HC80, SC80 and UC80 OPL models with 160-series drive; Q-voltage; Includes AC Drive F8169417
	F8172903	160-Series to PowerFlex 40 Drive Kit	HC80, SC80 and UC80 OPL models with 160-series drive; N and P-voltage; Includes AC Drive F8169418
1	F8169416	PowerFlex 40 Drive	HC80 and SC80 vended models that have been retrofitted with F8172805 160-Series to PowerFlex 40 Drive Kit; Q-voltage
	F8169417	PowerFlex 40 Drive	HC80, SC80 and UC80 OPL models that have been retrofitted with F8172807 160-Series to PowerFlex 40 Drive Kit; Q-voltage
	F8169418	PowerFlex 40 Drive	HC80, SC80 and UC80 OPL models that have been retrofitted with F8172903 160-Series to PowerFlex 40 Drive Kit; N and P-voltage
2	F200320900	AC Drive Radio Filter Assembly	

© Copyright, Alliance Laundry Systems LLC – DO NOT COPY or TRANSMIT

Control Module - AC, AL, AX, AY, BC, BL, BX and BY Models Starting 7/14/04

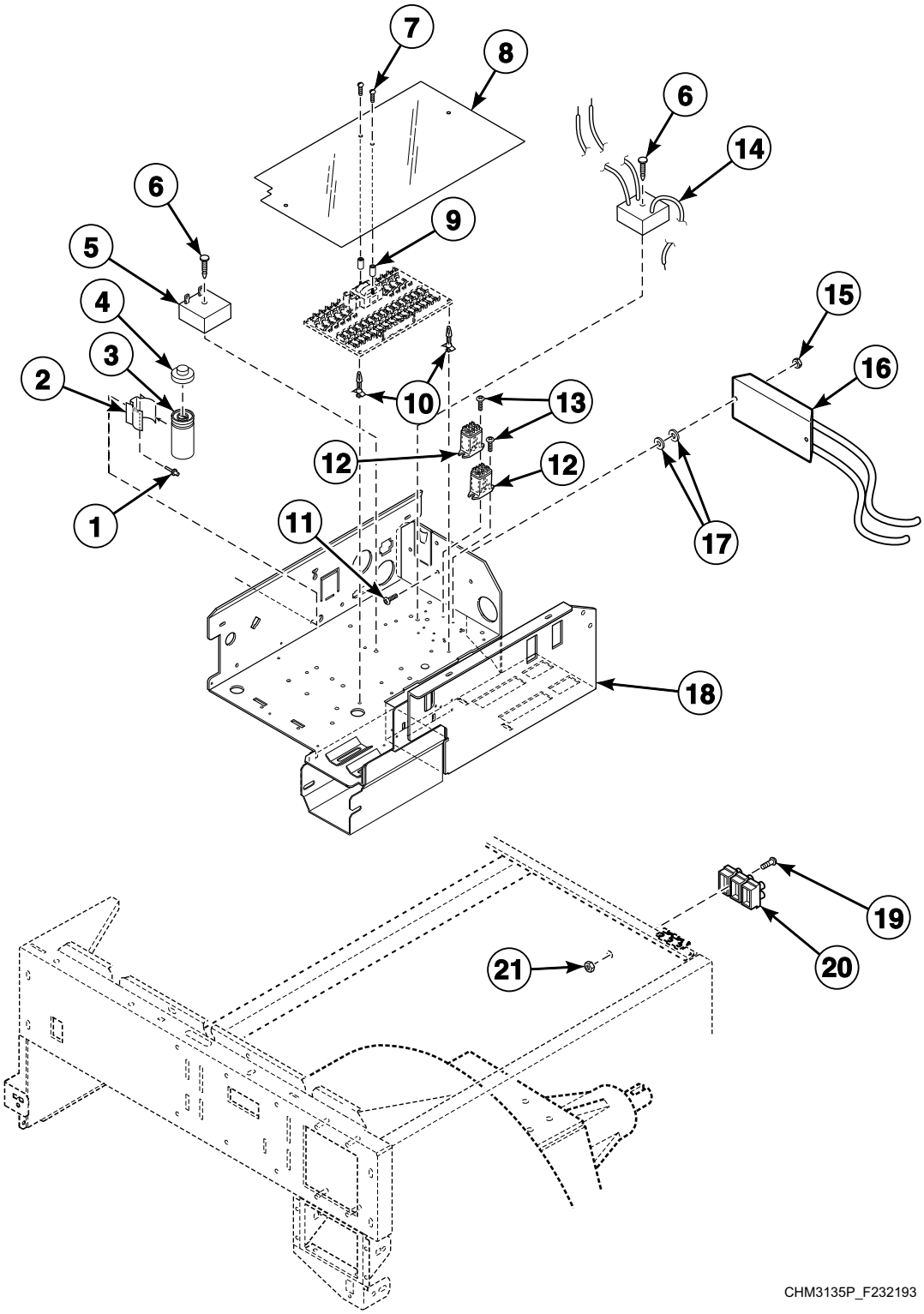

© Copyright, Alliance Laundry Systems LLC – DO NOT COPY or TRANSMIT

Control Module - AC, AL, AX, AY, BC, BL, BX and BY Models Starting 7/14/04

REF	PART NO.	DESCRIPTION	COMMENTS
1	F431215	Pop Rivet	
2	F0320211-00	Capacitor Mounting Bracket	
3	F370225P	Capacitor	
4	F0140941-00	Tubing	Order 1 foot
5	F0330404-00P	Timer	Models through 8/5/05
6	F0432316-00	Ratchet Fastener	Models through 8/5/05
7	F431702	Screw	
8	F0170427-00	Output Board Cover	
9	F431806	Nut	
10	F180501	Standoff	
11	F430909	Screw	
12	F330230	Flange Relay	Models through 8/5/05
13	F0430165-00	Screw	Models through 8/5/05
14	F200296100P	Time Delay Assembly	
15	F431016	Nut	
16	F0637379-00P	AC Drive Resistor Assembly	200 Volt; Includes items 11 and 15
	F0637379-01P	AC Drive Resistor Assembly	400 Volt; Includes items 11 and 15
17	F8195301	Washer	
18	F200100103	Module Box Assembly	
19	F430938	Screw	Used with F140747 Input Power Block
	F430903	Screw	Used with F0140798-00 Input Block
20	F140747	Input Power Block	3 terminal
	F0140798-00P	Input Block	3 terminal; Models with heat or pump
21	F430231	Nut	Used with F140747 Input Power Block
	F430232	Nut	Used with F0140798-00 Input Block

© Copyright, Alliance Laundry Systems LLC – DO NOT COPY or TRANSMIT

Control Module - AN and BN Models Starting 7/15/04

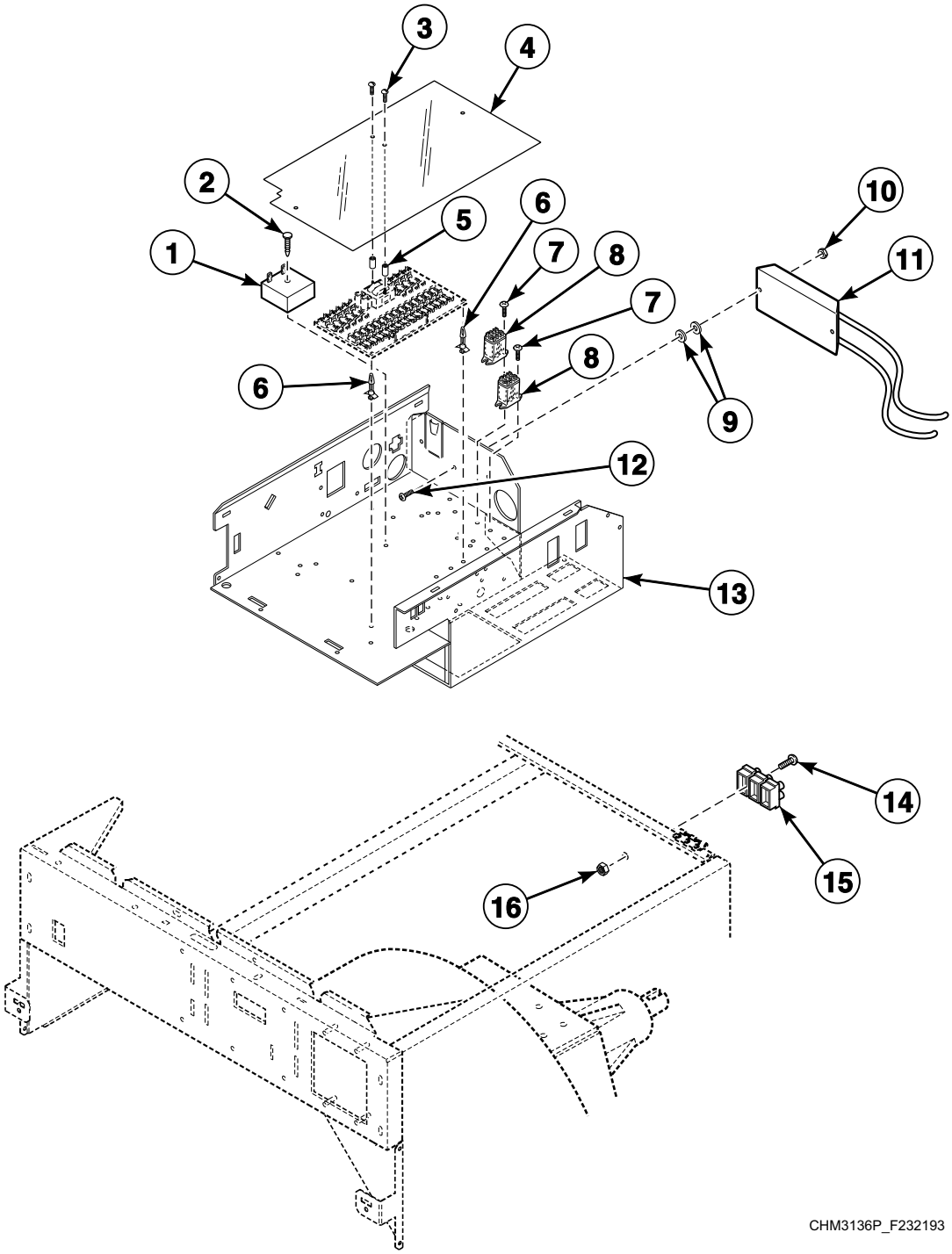

© Copyright, Alliance Laundry Systems LLC – DO NOT COPY or TRANSMIT

Control Module - AN and BN Models Starting 7/15/04

REF	PART NO.	DESCRIPTION	COMMENTS
	F200205802	Main Harness	
1	F0330404-00P	Timer	Models through 2/10/05
2	F0432316-00	Ratchet Fastener	Models through 2/10/05
3	F431702	Screw	
4	F0170427-00	Output Board Cover	
5	F431806	Nut	
6	F180501	Standoff	
7	F0430165-00	Screw	Models through 2/10/05
8	F330230	Flange Relay	Models through 2/10/05
9	F8195301	Washer	
10	F431016	Nut	
11	F0637379-00P	AC Drive Resistor Assembly	200 Volt; Includes items 10 and 12
	F0637379-01P	AC Drive Resistor Assembly	400 Volt; Includes items 10and 12
12	F430909	Screw	
13	F200100102	Module Box Assembly	
14	F430903	Screw	
15	F0140798-00P	Input Block	3 terminal
16	F430232	Nut	

© Copyright, Alliance Laundry Systems LLC – DO NOT COPY or TRANSMIT

AC Drive Box - A and B Control Models Starting 7/15/04

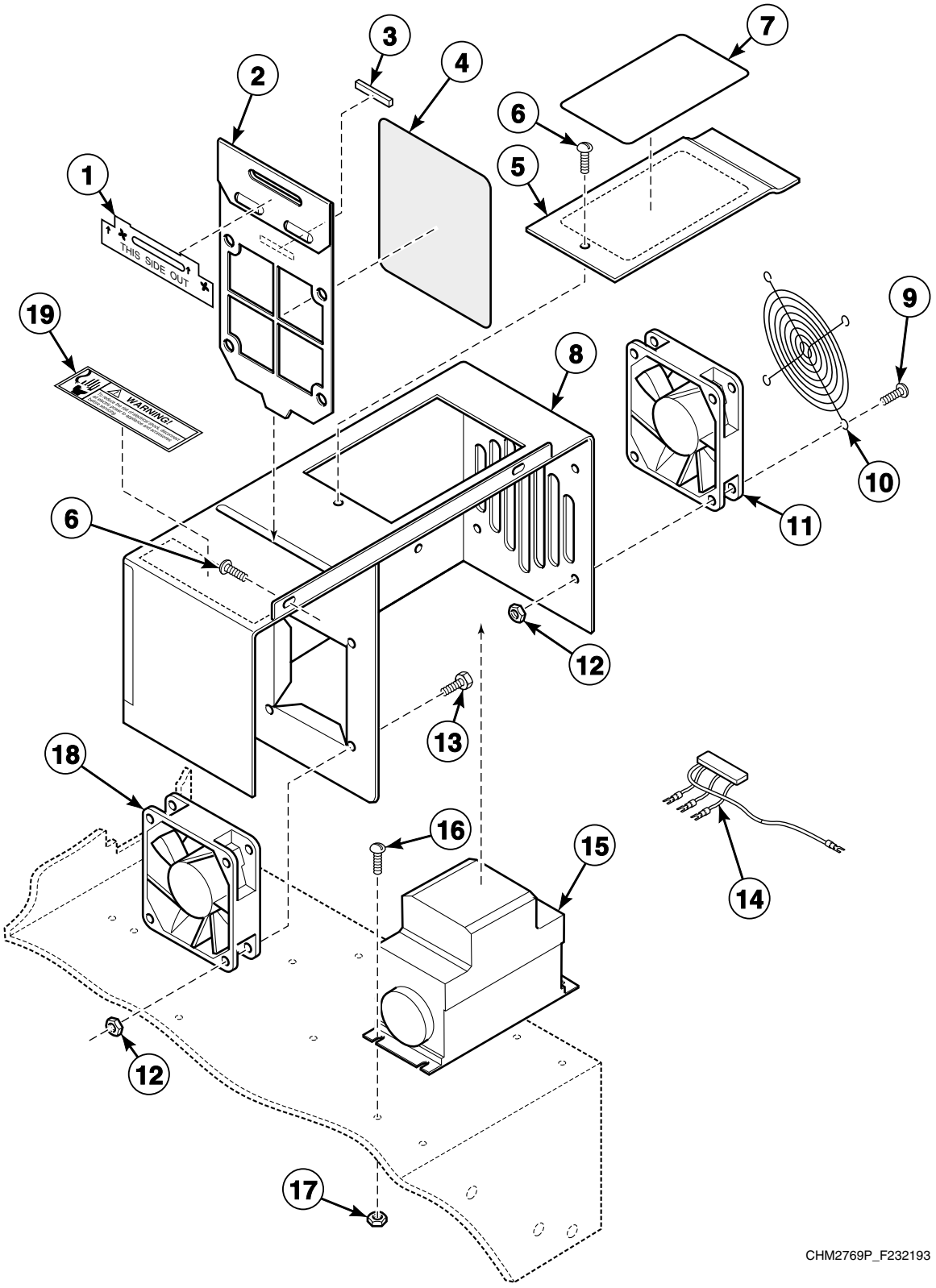

© Copyright, Alliance Laundry Systems LLC – DO NOT COPY or TRANSMIT

AC Drive Box - A and B Control Models Starting 7/15/04

REF	PART NO.	DESCRIPTION	COMMENTS
	F0360160-00P	Line Reactor Kit	Use with F370843 Inverter Drive
	F0360167-00P	Line Reactor Kit	Use with F370844 Inverter Drive
	F200146800P	AC Drive Cover Assembly	Includes items 2, 5, 6, 8-13 and 18
1	F231377	Filter Handle Decal	
2	F8026401P	Air Filter Assembly	Includes items 2-4
3	F140639	Velcro	
4	F0270321-00P	Filter	
5	F200181500	Display Window Cover	
6	F430174	Screw	
7	N/A	AC Drive Module Notice Decal	
8	F200100201	AC Drive Cover Assembly	
9	F430922	Screw	
10	F0220922-00	Fan Guard	
11	F110110	Muffin Fan	
12	F430231	Nut	
13	F430916	Screw	
14	F200320900	AC Drive Radio Filter Assembly	
15	F370843	Inverter Drive	200 Volt
	F370844	Inverter Drive	400 Volt
16	F8535601	Screw	
17	F430232	Nut	
18	F110105	Muffin Fan	
19	D500316	Warning Label	

N/A = Part no longer available

© Copyright, Alliance Laundry Systems LLC – DO NOT COPY or TRANSMIT

AC Drive - A and B Control Models Starting 7/15/04

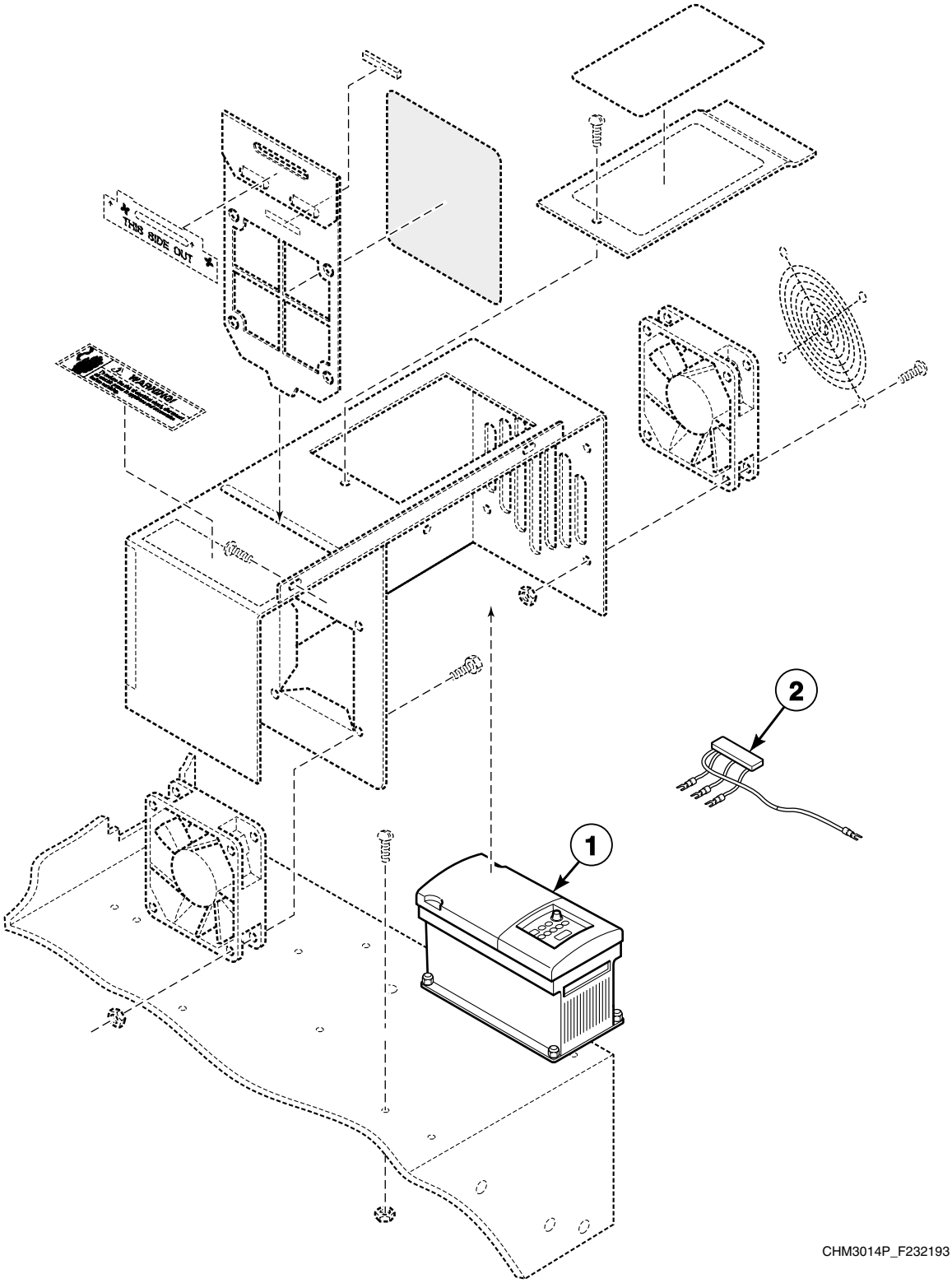

© Copyright, Alliance Laundry Systems LLC – DO NOT COPY or TRANSMIT

AC Drive - A and B Control Models Starting 7/15/04

REF	PART NO.	DESCRIPTION	COMMENTS
	F8172805	160-Series to PowerFlex 40 Drive Kit	HC80 and SC80 vended models with 160-series drive; Q-voltage; Includes AC Drive F8169416
	F8172807	160-Series to PowerFlex 40 Drive Kit	HC80, SC80 and UC80 OPL models with 160-series drive; Q-voltage; Includes AC Drive F8169417
	F8172903	160-Series to PowerFlex 40 Drive Kit	HC80, SC80 and UC80 OPL models with 160-series drive; N and P-voltage; Includes AC Drive F8169418
1	F8169416	PowerFlex 40 Drive	HC80 and SC80 vended models that have been retrofitted with F8172805 160-Series to PowerFlex 40 Drive Kit; Q-voltage
	F8169417	PowerFlex 40 Drive	HC80, SC80 and UC80 OPL models that have been retrofitted with F8172807 160-Series to PowerFlex 40 Drive Kit; Q-voltage
	F8169418	PowerFlex 40 Drive	HC80, SC80 and UC80 OPL models that have been retrofitted with F8172903 160-Series to PowerFlex 40 Drive Kit; N and P-voltage
2	F200320900	AC Drive Radio Filter Assembly	

© Copyright, Alliance Laundry Systems LLC – DO NOT COPY or TRANSMIT

Coin Meter Mounting Assembly, Water Level Switch and Keypad - A and B Control Models

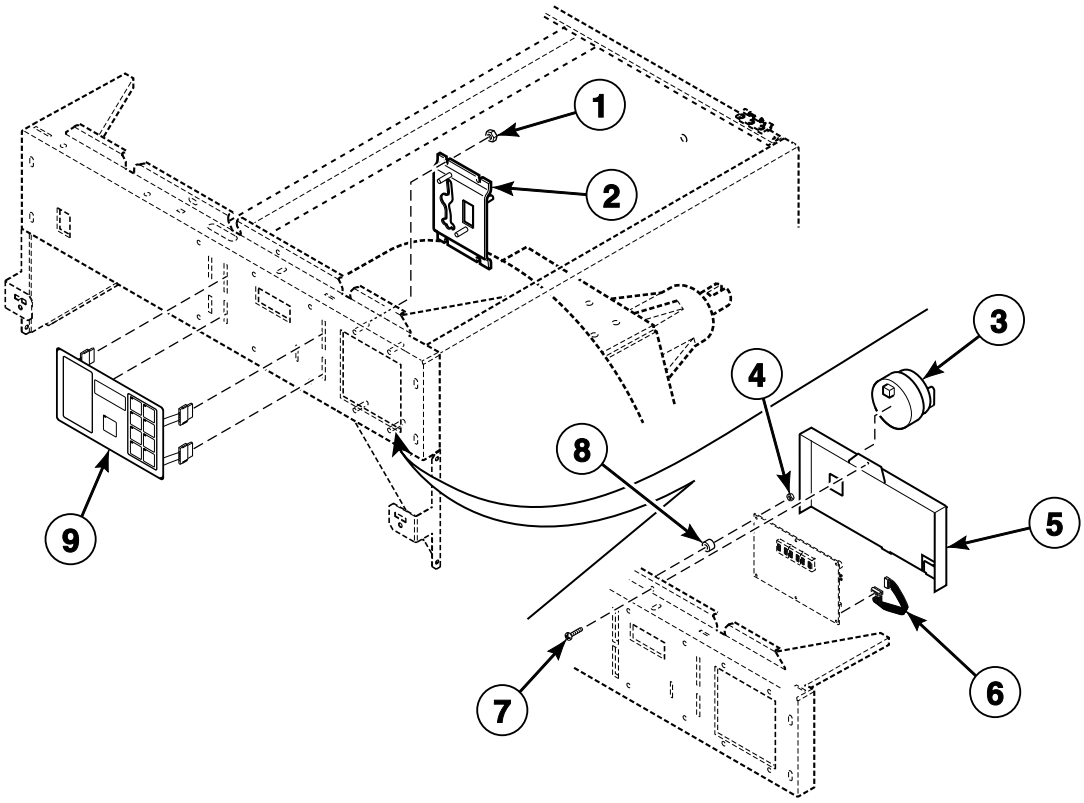

CHM2404P_F232193

© Copyright, Alliance Laundry Systems LLC – DO NOT COPY or TRANSMIT

Coin Meter Mounting Assembly, Water Level Switch and Keypad - A and B Control Models

REF	PART NO.	DESCRIPTION	COMMENTS
1	685846	Nut	AC, AX, BC and BX models
	F431017	Nut	AN, AY, BN and BY models
2	F0636707-00	Mounting Bracket Assembly	AC, AX, BC and BX single drop models; AN and BN models with an on/off switch
	F635319	Mounting Bracket Assembly	Dual drop; AC, AX, BC and BX models
	F0636445-00	Coin Meter Mounting Kit	Single drop; AC, AX, BC and BX models; Includes item 1
	F0636445-01	Coin Meter Mounting Assembly	Dual drop; AC, AX, BC and BX models; Includes item 1
	F0636445-02	On/Off Switch Assembly	AN and BN models; Includes item 1 and the on/off switch
	F635320	Mounting Bracket Assembly	AY and BY models
3	F0340351-10P	Water Level Switch	
	F8223001P	Water Pressure Switch	Heat safety
4	F430231	Nut	
5	F0634903-00	Control Cover	
6	F140219P	Ribbon Cable	Connects the computer to the output board cca
7	F430928	Screw	
8	N/A	Standoff	
9	F0231582-03P	Keypad	Models SC80BCV, SC80BLV, SC80BXV and SC80BYV; English
	F0231582-06P	Keypad	Models SC80BCV, SC80BLV, SC80BXV and SC80BYV; Icon
	F0231582-07P	Keypad	Models HC80BCV, HC80BLV, HC80BXV and HC80BYV; English
	F0231582-01P	Keypad	Models SC80BNV and UC80BNV; English
	F0231582-05P	Keypad	Models SC80BNV and UC80BNV; Icon
	F0231582-08P	Keypad	Model HC80BNV; English
	F8132501P	Keypad	Models SC80ACV, SC80ALV, SC80AXV and SC80AYV; English
	F0231582-16P	Keypad	Models SC80ACV, SC80ALV, SC80AXV and SC80AYV; Icon
	F0231582-17P	Keypad	Models HC80ACV, HC80ALV, HC80AXV and HC80AYV; English
	F0231582-19	Keypad	Models HC80ACV, HC80ALV, HC80AXV and HC80AYV; Icon
	F023158231P	Keypad	Models SC80ANV and UC80ANV; Icon
	F023158232P	Keypad	Model HC80ANV; Icon

N/A = Part no longer available

© Copyright, Alliance Laundry Systems LLC – DO NOT COPY or TRANSMIT

Output Board CCA, Computer, Interface CCA and Thermostat - A and B Control Models

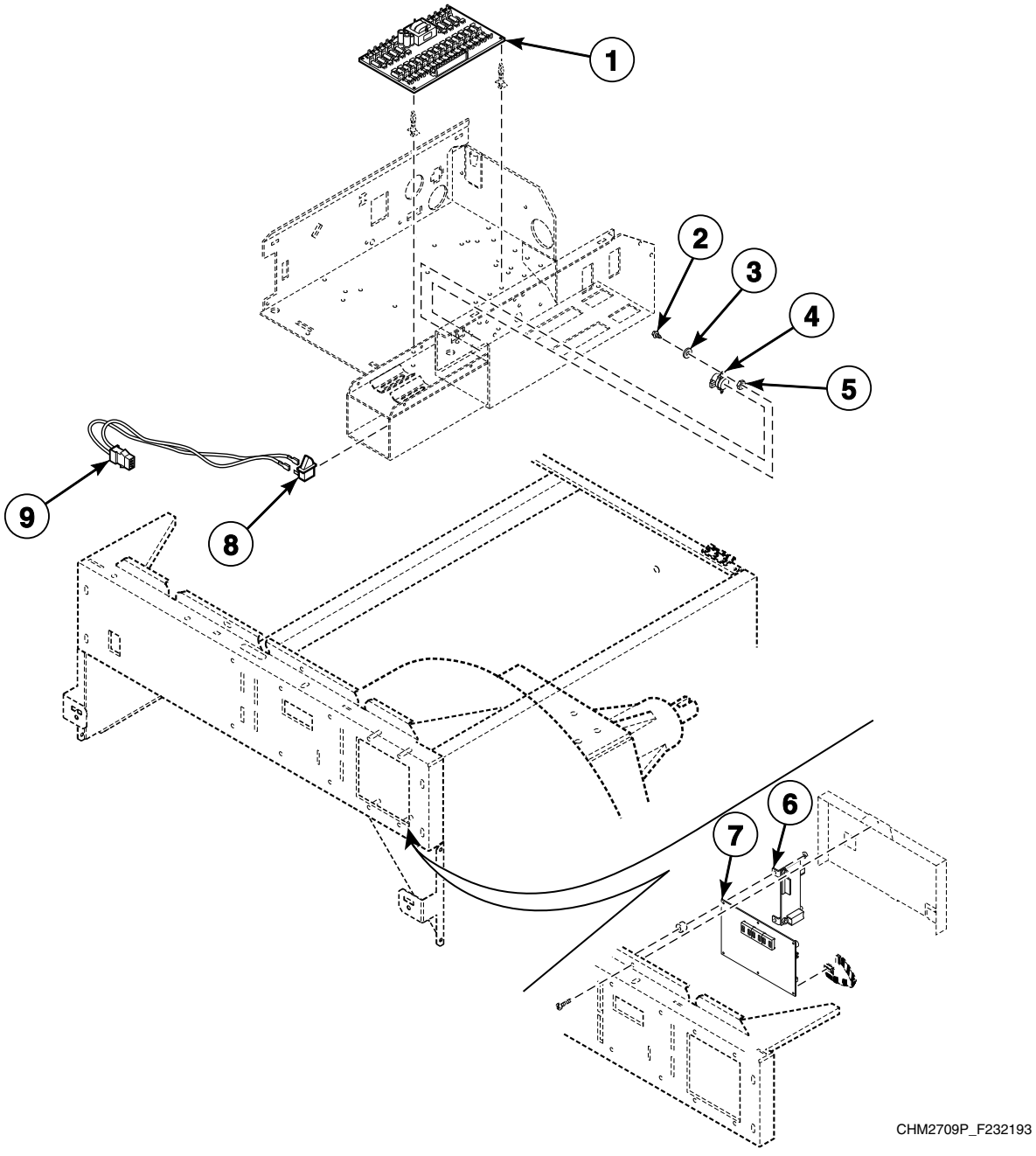

© Copyright, Alliance Laundry Systems LLC – DO NOT COPY or TRANSMIT

Output Board CCA, Computer, Interface CCA and Thermostat - A and B Control Models

REF	PART NO.	DESCRIPTION	COMMENTS
	F200296000P	Computer and Door Lock Harness	Use with F037044860-1 Output CCA
	F200040300P	Communication Box Kit	A-Control HC Models; U.S.
	F200041700P	Communication Box Kit	A-Control HC Models; International
	F200041800P	Communication Box Kit	A-Control SC Models; International
	F200098500P	Communication Box Kit	B-Control HC Models; U.S.
	F200098600P	Communication Box Kit	B-Control SC Models; U.S.
	F200098700P	Communication Box Kit	B-Control SC Models; International
1	F037044860-1	Output CCA	AC, AL, AN, AX, AY, BC, BL, BN, BX and BY models
2	F430928	Screw	
3	F431113	Washer	
4	F0290116-00	Thermostat	
5	F431022	Nut	
6	F200017400P	Interface CCA	AY models
	F200209200	Interface CCA	AC, AL, AX and AY models
	F350108	Fuse	1/8 Amp
	F350109	Fuse	1/2 Amp
	F350110	Fuse	1 Amp
7	F0370455-10P	Computer	BC, BL, BX and BY models
	F0370452-30P	Computer	BN models
	F0370452-31P	Computer	BN models with heat
	F037046530P	Computer	AC, AL and AX models
	F037046532P	Computer	AY models
	F037047530P	Computer	AN models
8	N/A	Switch	AC and AX models
9	F200137700P	Coin Box Audit Harness	AC and AX models

N/A = Part no longer available

© Copyright, Alliance Laundry Systems LLC – DO NOT COPY or TRANSMIT

Flush Mount Coin Meter Assembly - AC, AX, BC, BX, NC and NX Models; Single Drop

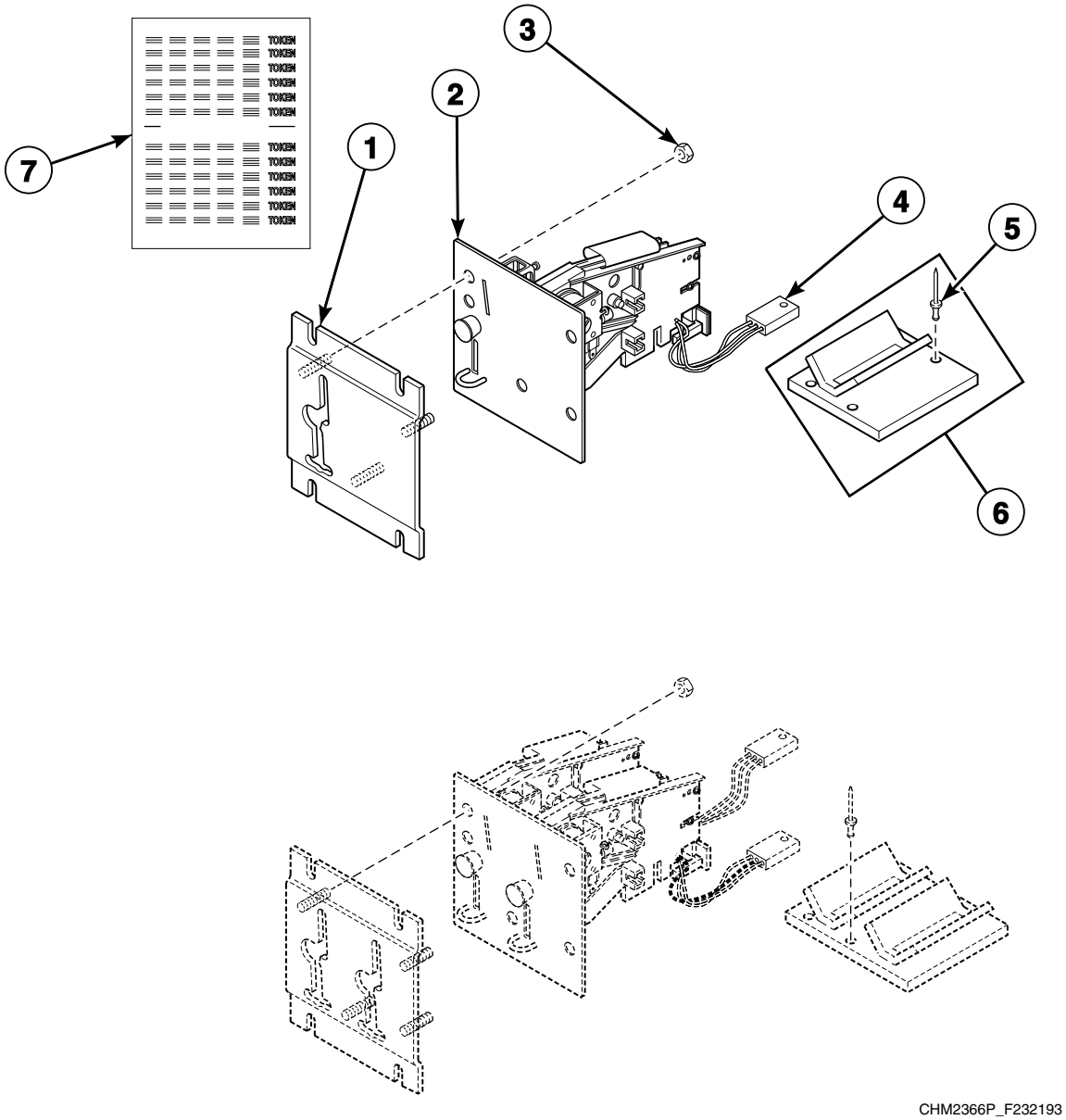

CHM2366P_F232193

© Copyright, Alliance Laundry Systems LLC – DO NOT COPY or TRANSMIT

Flush Mount Coin Meter Assembly - AC, AX, BC, BX, NC and NX Models; Single Drop

REF	PART NO.	DESCRIPTION	COMMENTS
	F200010000P	Coin Meter Assembly	U.S. $.25; Includes items 1-3
	F200010006	Coin Meter Assembly	.800 token; Includes items 1-3
	F200010007	Coin Meter Assembly	.880 token; Includes items 1-3
	F200010009	Coin Meter Assembly	.990 token; Includes items 1-3
	F200010011	Coin Meter Assembly	Jeton WH121 token; Includes items 1-3
	F200010012	Coin Meter Assembly	Jeton .08 token; Includes items 1-3
1	F0636707-00	Mounting Bracket Assembly	
2	38464P	Coin Drop Assembly	Canada .25
	N/A	Coin Drop Assembly	Australia .20
	N/A	Coin Drop Assembly	Belgium 5 franc
	N/A	Coin Drop Assembly	Denmark 2 krone
	N/A	Coin Drop Assembly	United Kingdom 20 pence
	N/A	Coin Drop Assembly	France 2 franc
	N/A	Coin Drop Assembly	Hong Kong 5 dollar
	N/A	Coin Drop Assembly	Italy 500 lirraiget
	N/A	Coin Drop Assembly	Japan 100 yen
	N/A	Coin Drop Assembly	Korea 500 won
	N/A	Coin Drop Assembly	South Africa 2 rand
	N/A	Coin Drop Assembly	Spain 100 peseta
	N/A	Coin Drop Assembly	Thailand 10 baht
	N/A	Coin Drop Assembly	.886 token
	N/A	Coin Drop Assembly	1.000 token
	N/A	Coin Drop Assembly	Jeton .08 token
	70441601P	Coin Drop	U.S. $.25
	38963P	Coin Drop	.800 token
	38462P	Coin Drop Assembly	Token; 118-1; .880 diameter x .079 thick; Brass
	38463	Coin Drop Assembly	Token; 118-5; .990 diameter x .081 thick; Silver
	N/A	Coin Drop Assembly	Jeton WH121 token
	N/A	Coin Meter	Jeton .08 token
	38462P	Coin Drop Assembly	Currency STD-118-1
	38463	Coin Drop Assembly	Currency STD-118-5
	38963P	Coin Drop	Token STD-118-16 not available; Replacement for 38963P Coin Drop only
3	685846	Nut	
4	200674P	Opto Coupler	
5	F431215	Pop Rivet	
6	F200002504P	Coin Guide Assembly	Includes item 5
7	38725	Coin Identification Paper	

N/A = Part no longer available

© Copyright, Alliance Laundry Systems LLC – DO NOT COPY or TRANSMIT

Flush Mount Coin Meter Assembly - AC, AX, BC, BX, NC and NX Models; Dual Drop

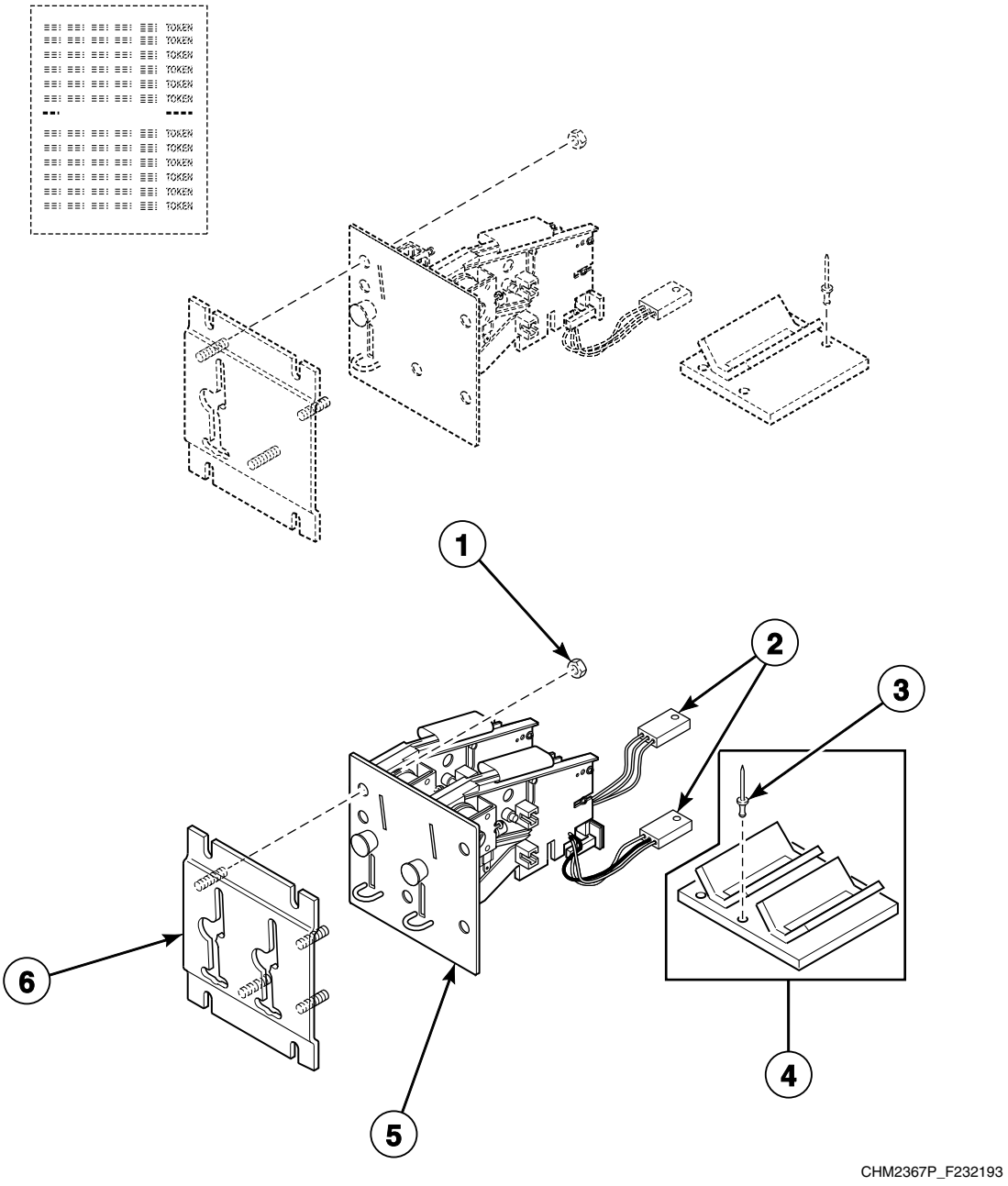

© Copyright, Alliance Laundry Systems LLC – DO NOT COPY or TRANSMIT

Flush Mount Coin Meter Assembly - AC, AX, BC, BX, NC and NX Models; Dual Drop

REF	PART NO.	DESCRIPTION	COMMENTS
	F200010001	Coin Meter Assembly	Australia .20 and 1; Includes items 1, 5 and 6
	F200010002	Coin Meter Assembly	100 and 500 yen; Includes items 1, 5 and 6
	F200010003	Coin Meter Assembly	Canada 1.00 and .25; Includes items 1, 5 and 6
	F200010004	Coin Meter Assembly	New Zealand .20 and 1; Includes items 1, 5 and 6
	F200010005P	Coin Meter Assembly	U.S. $1.00 and .25; Includes items 1, 5 and 6
	F200010008	Coin Meter Assembly	.50 and 2.00 euro; Includes items 1, 5 and 6
	F200010010	Coin Meter Assembly	10 and 50 Taiwan; Includes items 1, 5 and 6
1	685846	Nut	
2	200674P	Opto Coupler	
3	F431215	Pop Rivet	
4	F200002505	Coin Guide Kit	Includes item 3
5	N/A	Coin Meter	10 and 50 Taiwan
	N/A	Coin Meter	Belgium 5 and 20 franc
	N/A	Coin Meter	Denmark 1 and 5 krone
	N/A	Coin Meter	Denmark 5 and 10 krone
	38472	Coin Drop Assembly	United Kingdom 20 pence and 1 pound
	70283102	Coin Drop Assembly	.20 and .50 euro
	210195	Coin Drop Assembly	.20 and 1.00 euro
	210196	Coin Drop Assembly	.50 and 1.00 euro
	N/A	Coin Meter	2 and 5 franc
	N/A	Coin Meter	2 and 10 franc
	39157	Coin Drop Assembly	Israel 1 and 5 shekel
	38521	Coin Drop Assembly	Korea 100 and 500 won
	N/A	Coin Meter	Spain 100 and 500 peseta
	38467	Coin Drop Assembly	Australia .20 and 1
	38519	Coin Drop Assembly	Japan 100 and 500 yen
	70441602	Coin Drop Assembly	Canada 1.00 and .25
	N/A	Coin Drop Assembly	New Zealand .20 and 1
	200731	Coin Drop	U.S. $1.00
	70256402P	Coin Drop	U.S. $1.00 and .25
	F0160737-00	Coin Meter	.50 and 2.00 euro
	70281102	Coin Drop Assembly	10 and 50 Taiwan dollar
	CK077	Coin Drop Kit	10 Taiwan dollar
6	F635319	Mounting Bracket Assembly	

N/A = Part no longer available

© Copyright, Alliance Laundry Systems LLC – DO NOT COPY or TRANSMIT

Electronic Coin Meter Assembly - AC, AX, BC, BX, NC and NX Models

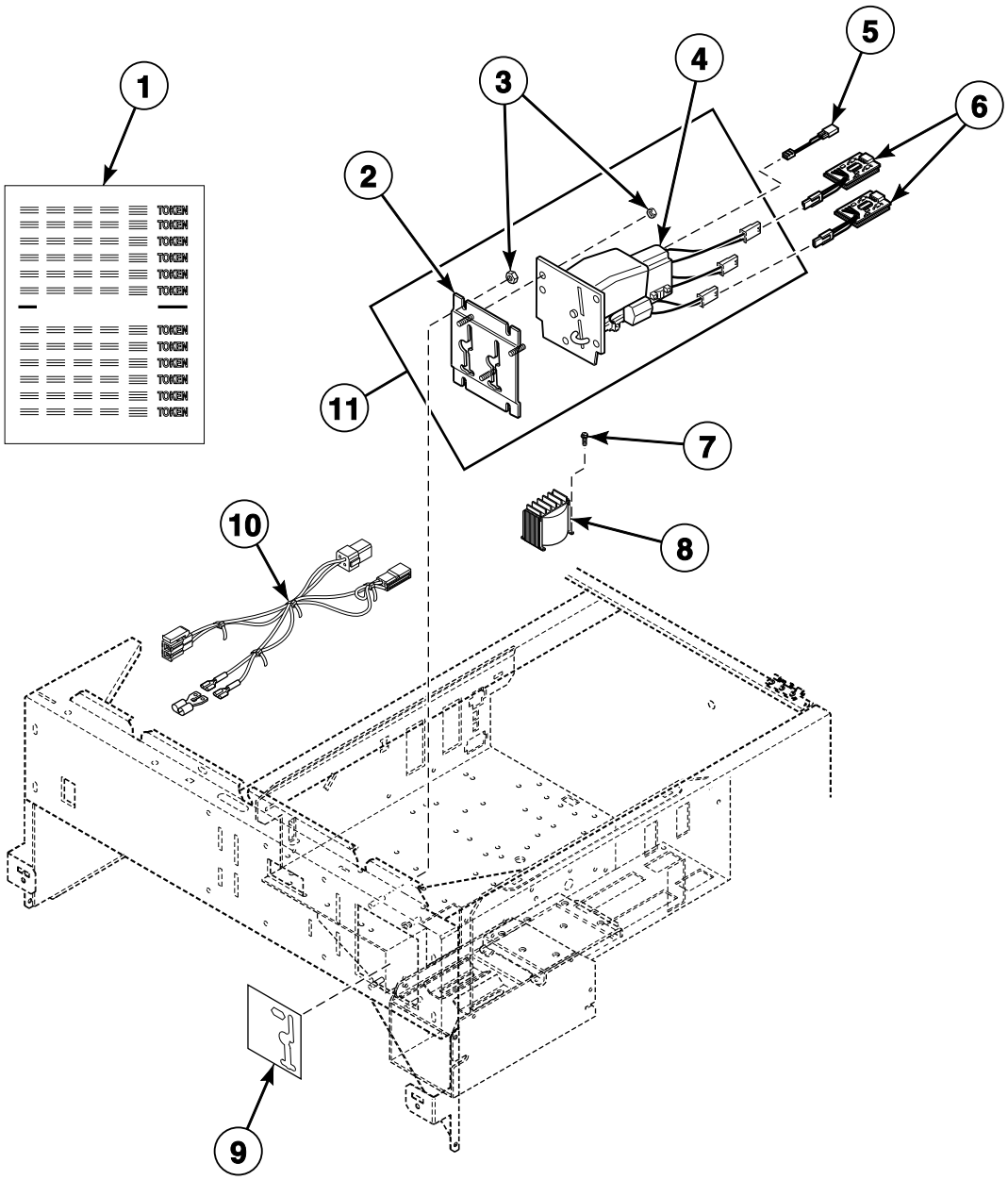

© Copyright, Alliance Laundry Systems LLC – DO NOT COPY or TRANSMIT

Electronic Coin Meter Assembly - AC, AX, BC, BX, NC and NX Models

REF	PART NO.	DESCRIPTION	COMMENTS
	CK501	Electronic Coin Drop Kit	Includes items 2, 3, 5, 6 and 8-10
1	38725	Coin Identification Paper	
2	F635319	Mounting Bracket Assembly	
3	685846	Nut	
4	CK115	Electronic Coin Drop Kit	U.S. and Canada; Requires CK501 Electronic Coin Drop Kit for installation; *
	CK113	Electronic Coin Drop Kit	Japan and Taiwan; Requires CK501 Electronic Coin Drop Kit for installation; *
	CK099	Electronic Coin Drop Kit	Australia, New Zealand, Hong Kong, South Korea and Malaysia
	70294103P	Electronic Coin Drop Assembly	United Kingdom and euro; Includes 201216 Nut
	CK100	Electronic Coin Drop Kit	United Kingdom and euro; Requires CK501 Electronic Coin Drop Kit for installation; *
	70294104	Electronic Coin Drop Assembly	Denmark, Norway and euro
	CK101	Electronic Coin Drop Kit	Denmark, Norway and euro; Requires CK501 Electronic Coin Drop Kit for installation; *
	70513306	Electronic Coin Drop Assembly	U.S., Ecuador and Mexico
	CK110	Electronic Coin Drop Kit	U.S., Ecuador and Mexico; Requires CK501 Electronic Coin Drop Kit for installation; *
	70294107	Electronic Coin Drop Assembly	Euro, Latvia and Lithuania
	CK103	Electronic Coin Drop Kit	Euro, Latvia and Lithuania; Requires CK501 Electronic Coin Drop Kit for installation; *
	70294111	Electronic Coin Drop Assembly	.10 - 2.00 Euro
	CK109	Electronic Coin Drop Kit	.10 - 2.00 Euro; Requires CK501 Electronic Coin Drop Kit for installation; *
5	F8035701	Capacitor	AC, AX, BC and BX models
6	F8034701P	Pulse Expander Assembly	AC, AX, BC and BX models
7	N/A	Screw	
8	803527P	Transformer	
9	70295101	Overlay	SC models; Black
	70295301	Overlay	HC models; Gray
10	F200008700	Access Transformer Harness	
11	F200021600P	Coin Meter Assembly	U.S., Canada, Japan and Taiwan; Includes items 2-4; CK501 Electronic Coin Drop Kit required for installation
	70294104	Electronic Coin Drop Assembly	Denmark, Norway and euro; Includes items 2-4; CK501 Electronic Coin Drop Kit required for installation
	70513306	Electronic Coin Drop Assembly	U.S., Ecuador and Mexico; Includes items 2-4; CK501 Electronic Coin Drop Kit required for installation
	70294107	Electronic Coin Drop Assembly	Euro, Latvia and Lithuania; Includes items 2-4; CK501 Electronic Coin Drop Kit required for installation

N/A = Part no longer available

*** NOTE: Electronic coin drop kits include item 1, 201091 Overlay, 201104 Harness, 201216 Nut, 201572 Clip, 29786 Nut, electronic coin drop assembly and instruction**

© Copyright, Alliance Laundry Systems LLC – DO NOT COPY or TRANSMIT

Card Reader - Model SC80NRV

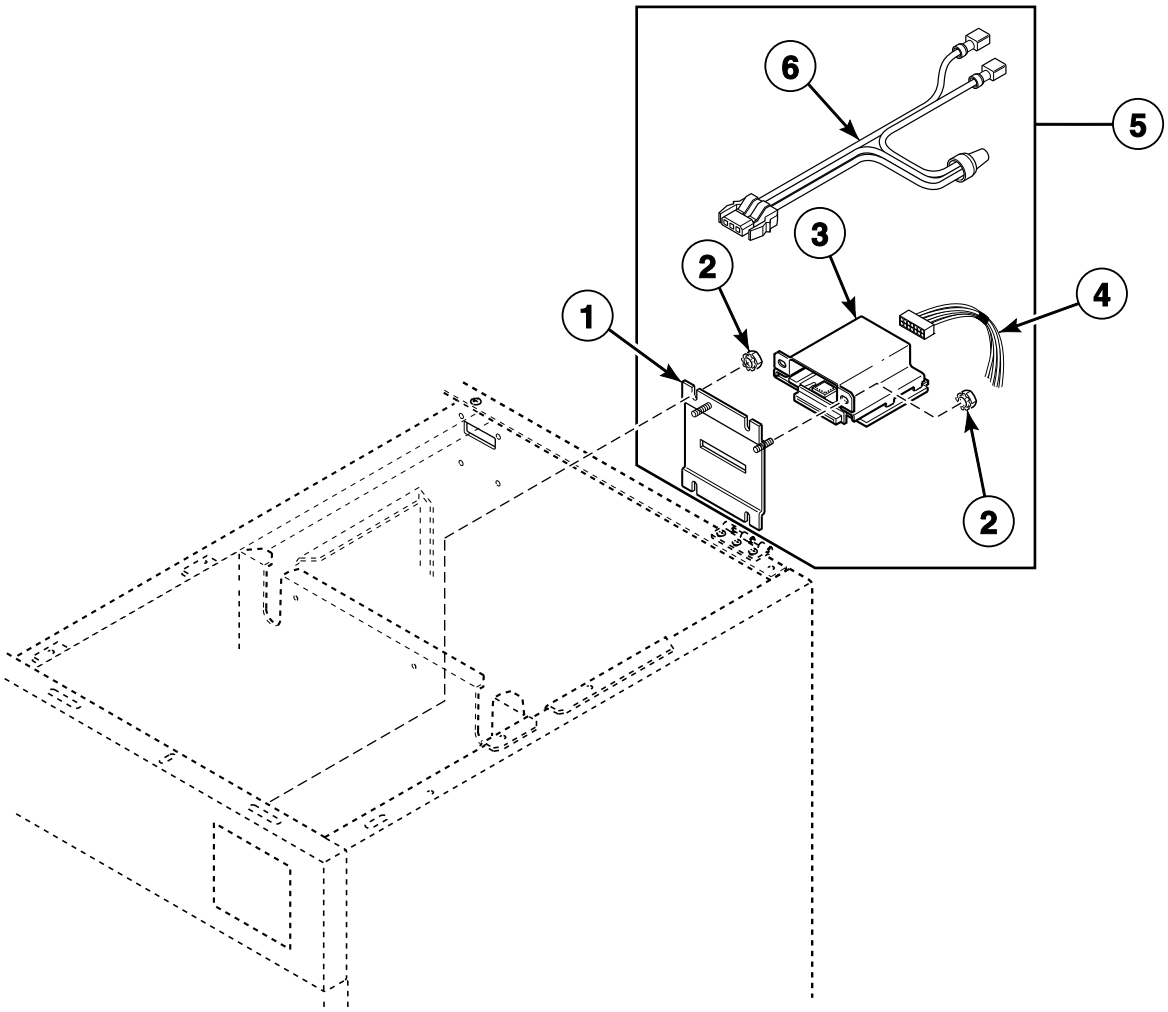

CHM2388P_F232193

© Copyright, Alliance Laundry Systems LLC – DO NOT COPY or TRANSMIT

Card Reader - Model SC80NRV

REF	PART NO.	DESCRIPTION	COMMENTS
1	F635320	Mounting Bracket Assembly	
2	F431017	Nut	
3	D510068P	Card Reader and Bracket Assembly	
4	F141887	Card Reader Harness	Non-network models
	F141889	Card Reader Harness	Network models
5	F200019900	Card Reader Assembly	Non-network models; Includes items 1-4 and 6
	F200019901	Card Reader Assembly	Network models; Includes items 1-4 and 6
6	F631973-2	Harness	Access

© Copyright, Alliance Laundry Systems LLC – DO NOT COPY or TRANSMIT

W2000 Coin Meter Assembly - VC and VX Models; Single Drop

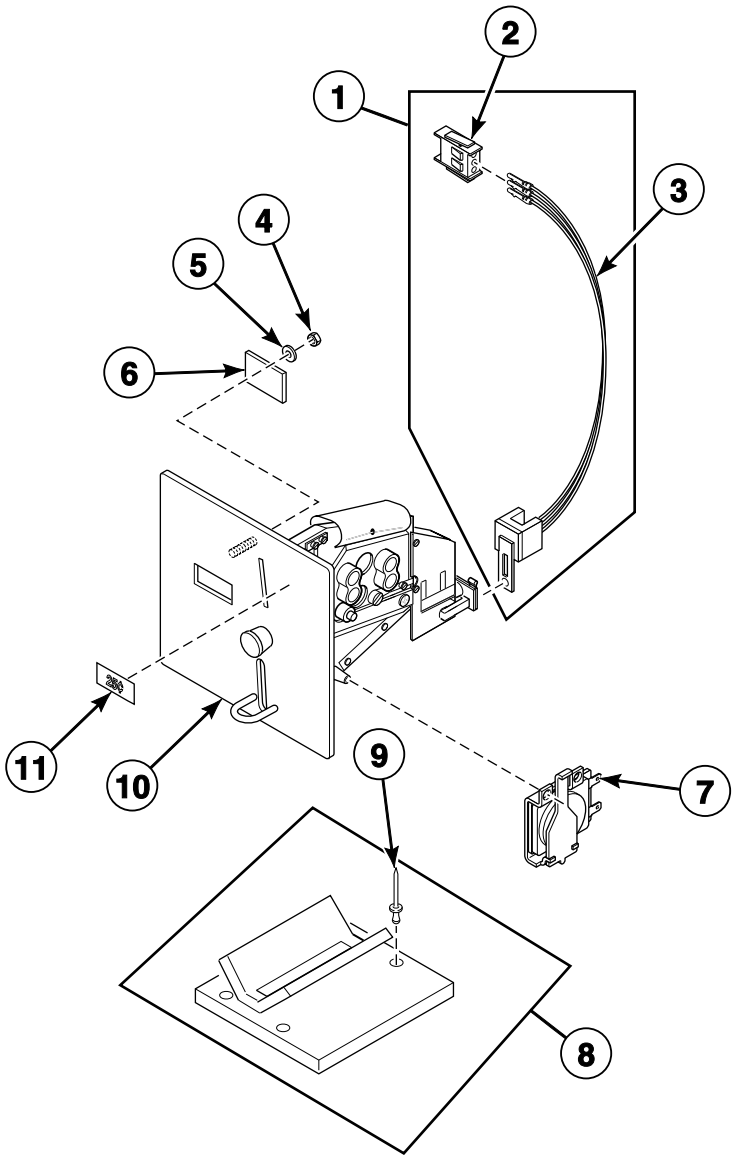

CHM2934P_F232193

© Copyright, Alliance Laundry Systems LLC – DO NOT COPY or TRANSMIT

W2000 Coin Meter Assembly - VC and VX Models; Single Drop

REF	PART NO.	DESCRIPTION	COMMENTS
1	F775801-03P	Optic Switch Kit	
2	F140571	Male Connector	
3	00430	Female Pin Terminal	
4	F430243	Nut	
5	N/A	Washer	
6	F608925	Coin Meter Insert	
7	F160466P	Coin Meter Blocking Coil	120 Volt
	F160467P	Coin Meter Blocking Coil	220 Volt
8	F200002502P	Coin Guide Assembly	Includes item 8
9	F431215	Pop Rivet	
10	F200003800P	Coin Meter Assembly	U.S. $.25; 120 Volt; Includes items 1-6 and F775302-03 Coin Meter Kit
	F200003801	Coin Meter Assembly	10 Taiwan; 120 Volt; Includes items 1-6 and F200115001 Coin Meter Assembly
	F200003802P	Coin Meter Assembly	.880 token; 220 Volt; Includes items 1-6 and F160692 Coin Meter
	F200003803	Coin Meter Assembly	.990 token; 120 Volt; Includes items 1-6 and F200115003 Coin Meter Assembly
	F200003805	Coin Meter Assembly	.990 token; 220 Volt; Includes items 1-6 and F160717 Coin Meter
	F200003806P	Coin Meter Assembly	U.S. $.25; 220 Volt; Includes items 1-6, 10 and F160718 Coin Meter
	F200003807	Coin Meter Assembly	.08 jeton; 220 Volt; Includes items 1-6 and F160719 Coin Meter
	F200003808	Coin Meter Assembly	.800 token; 120 Volt; Includes items 1-6 and F160735 Coin Meter
	F200003809	Coin Meter Assembly	500 wan and yen; 120 Volt; Includes items 1-6 and F0160739-00 Coin Meter
	F200003810	Coin Meter Assembly	.800 token; 220 Volt; Includes items 1-6
	F200003811	Coin Meter Assembly	500 wan and yen; 220 Volt; Includes items 1-6
	F200003812	Coin Meter Assembly	10 Taiwan; 220 Volt; Includes items 1-6
11	F231010	Coin Meter Insert Decal	$.25 insert

N/A = Part no longer available

© Copyright, Alliance Laundry Systems LLC – DO NOT COPY or TRANSMIT

W2000 Coin Meter Assembly - VC and VX Models; Dual Drop

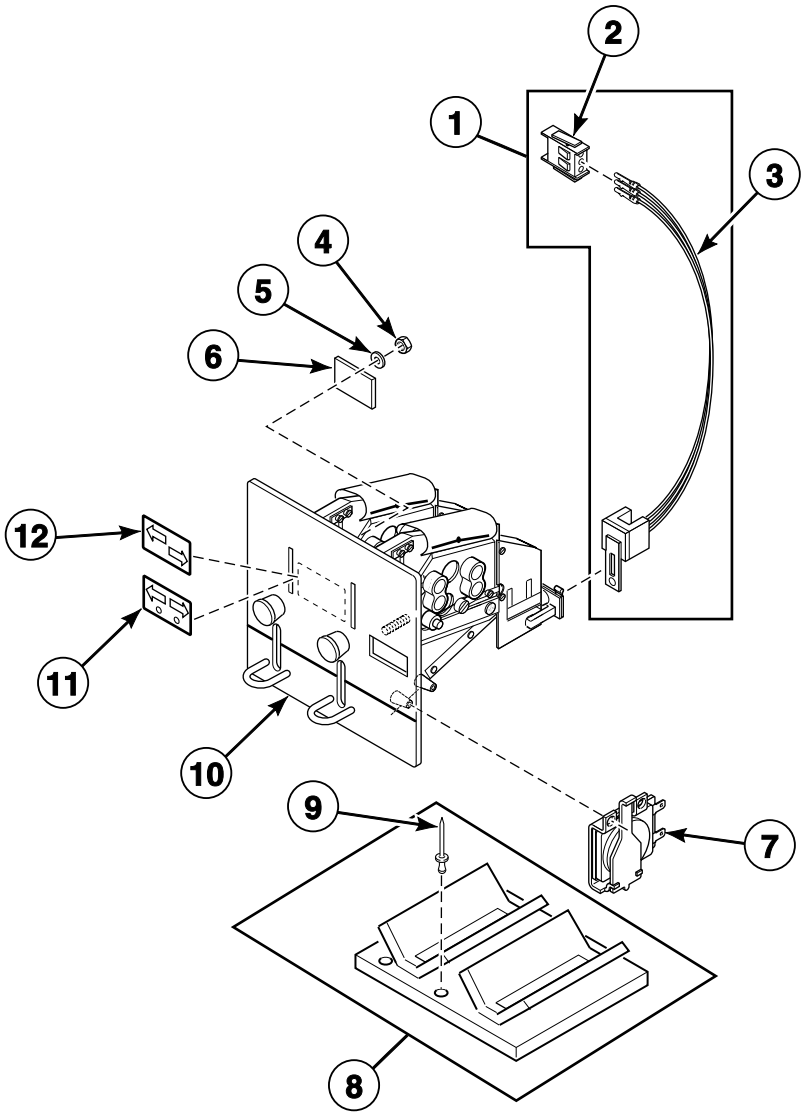

CHM2933P_F232193

© Copyright, Alliance Laundry Systems LLC – DO NOT COPY or TRANSMIT

W2000 Coin Meter Assembly - VC and VX Models; Dual Drop

REF	PART NO.	DESCRIPTION	COMMENTS
1	F775801-03P	Optic Switch Kit	
2	F140571	Male Connector	
3	00430	Female Pin Terminal	
4	F430243	Nut	
5	N/A	Washer	
6	F608925	Coin Meter Insert	
7	F160466P	Coin Meter Blocking Coil	120 Volt
	F160467P	Coin Meter Blocking Coil	220 Volt
8	F200002503	Coin Guide Assembly	Includes item 8
9	F431215	Pop Rivet	
10	F200005200	Coin Meter Assembly	U.K. 1 pound and 20 pence; 220 Volt; Includes items 1-6 and F160691 Coin Meter
	F200005201	Coin Meter Assembly	100 and 500 yen; 120 Volt; Includes items 1-6 and F160693 Coin Meter
	F200005202	Coin Meter Assembly	1 and 5 krona; 220 Volt; Includes items 1-6 and F160694 Coin Meter
	F200005203	Coin Meter Assembly	Australia 1.00 and .20; 220 Volt; Includes items 1-6 and F160695 Coin Meter
	F200005204	Coin Meter Assembly	1 and 5 rand; 220 Volt; Includes items 1-6 and F160698 Coin Meter
	F200005205	Coin Meter Assembly	1 and 5 shekel; 220 Volt; Includes items 1-6 and F160715 Coin Meter
	N/A	Coin Meter Assembly	U.S. $1.00 and .25; 120 Volt; Includes items 1-6, 10 and F0160730-00 Coin Meter
	F200005207	Coin Meter Assembly	100 and 500 peseta; 220 Volt; Includes items 1-6
	F200005208	Coin Meter Assembly	.50 and 2.00 euro; 220 Volt; Includes items 1-6, 11 and F0160736-00 Coin Meter
	F200005209	Coin Meter Assembly	Canada $1.00 and .25; 120 Volt; Includes items 1-6, 10 and F0160740-00 Coin Meter
	F200005210	Coin Meter Assembly	U.S. $1.00 and .25; 220 Volt; Includes items 1-6 and 10
	F200005211	Coin Meter Assembly	Canada $1.00 and .25; 220 Volt; Includes items 1-6 and 10
	F200005212	Coin Meter Assembly	100 and 500 yen; 220 Volt; Includes items 1-6
11	F0231595-00	Coin Meter Decal	$1/.25
12	N/A	Coin Meter Decal	.50/2.00 euro

N/A = Part no longer available

© Copyright, Alliance Laundry Systems LLC – DO NOT COPY or TRANSMIT

Optional Coin Box

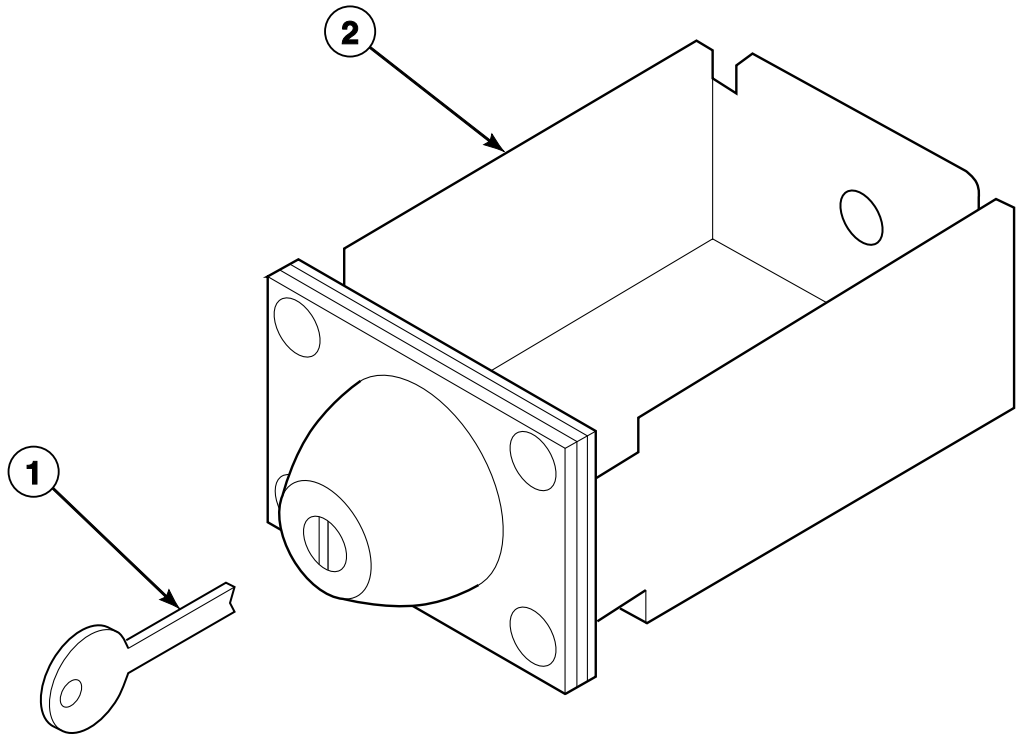

CHM1764P_F232193

© Copyright, Alliance Laundry Systems LLC – DO NOT COPY or TRANSMIT

Optional Coin Box

REF	PART NO.	DESCRIPTION	COMMENTS
1	F160420	Key	UG21
	F160421	Key	UG22
	N/A	Key	UG23
	F160423	Key	UG24
	N/A	Key	UG25
2	F160672	Coin Box	UG21
	F160673P	Coin Box	UG22
	N/A	Coin Box	UG23
	N/A	Coin Box	UG24
	N/A	Coin Box	UG25

N/A = Part no longer available

© Copyright, Alliance Laundry Systems LLC – DO NOT COPY or TRANSMIT

Control Panel Assembly and Control Panel Decals - AC, AL, AX, AY, BC, BL, BX and BY Models

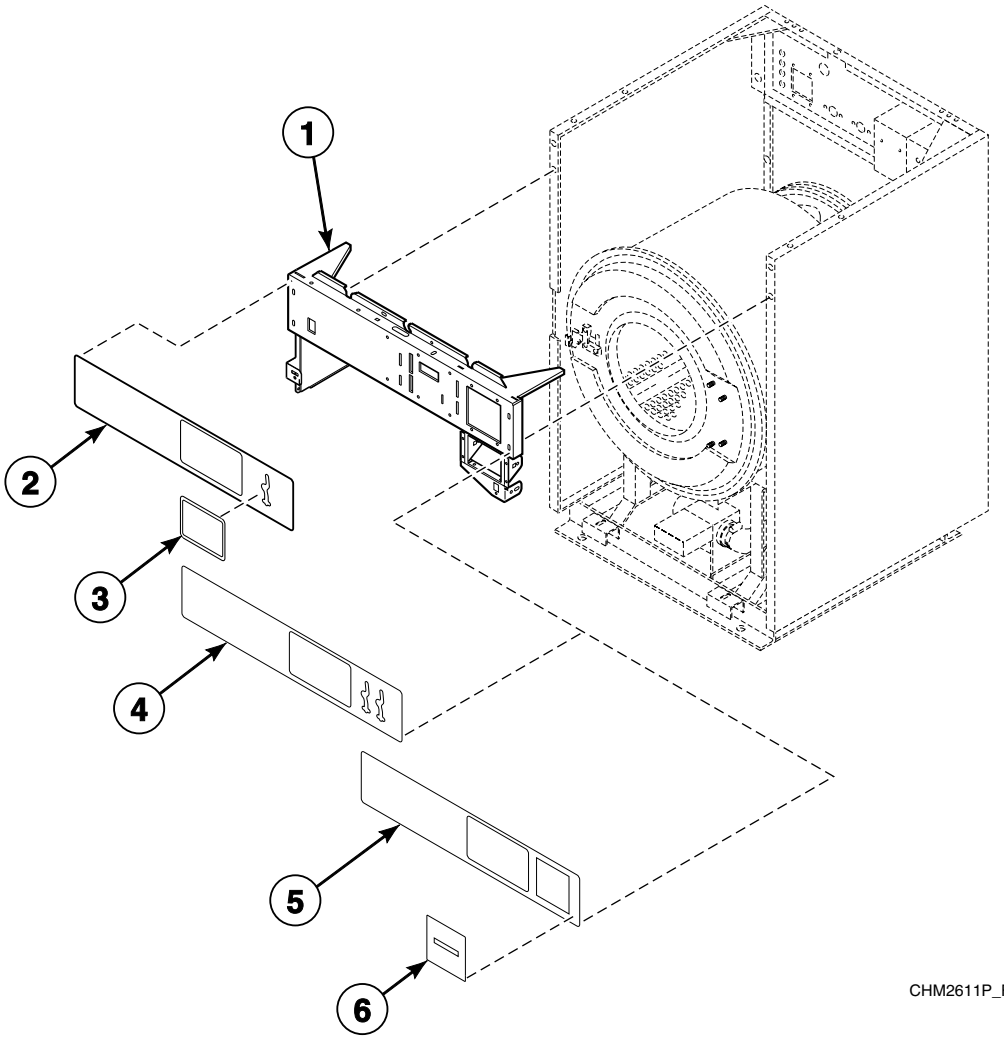

© Copyright, Alliance Laundry Systems LLC – DO NOT COPY or TRANSMIT

Control Panel Assembly and Control Panel Decals - AC, AL, AX, AY, BC, BL, BX and BY Models

REF	PART NO.	DESCRIPTION	COMMENTS
1	F0636541-00	Control Panel Assembly	
2	F0231606-51	Control Panel Decal	Models SC80ACV, SC80ALV, SC80AXV, SC80AYV, SC80BCV, SC80BLV, SC80BXV and SC80BYV; Single coin drop
	N/A	Control Panel Decal	Models SC80ACV, SC80ALV, SC80AXV, SC80AYV, SC80BCV, SC80BLV, SC80BXV and SC80BYV; Single coin drop; Icon
	F0231589-51	Control Panel Decal	Models HC80ACV, HC80ALV, HC80AXV, HC80AYV, HC80BCV, HC80BLV, HC80BXV and HC80BYV; Single coin drop
3	70246301	Coin Cover Overlay	Models SC80ALV and SC80BLV
4	F0231606-52	Control Panel Decal	Models SC80ACV, SC80ALV, SC80AXV, SC80AYV, SC80BCV, SC80BLV, SC80BXV and SC80BYV; Dual coin drop
	F0231589-52	Control Panel Decal	Models HC80ACV, HC80ALV, HC80AXV, HC80AYV, HC80BCV, HC80BLV, HC80BXV and HC80BYV; Dual coin drop
5	F0231606-53	Control Panel Decal	Models SC80AYV and SC80BYV
	F0231589-53	Control Panel Decal	Models HC80AYV and HC80BYV
6	F200116200	Overlay Decal	Model HC80AYV
	F200116201	Overlay Decal	Model SC80AYV

N/A = Part no longer available

© Copyright, Alliance Laundry Systems LLC – DO NOT COPY or TRANSMIT

Control Panel Assembly, Controls and Control Panel Decals - AN and BN Models

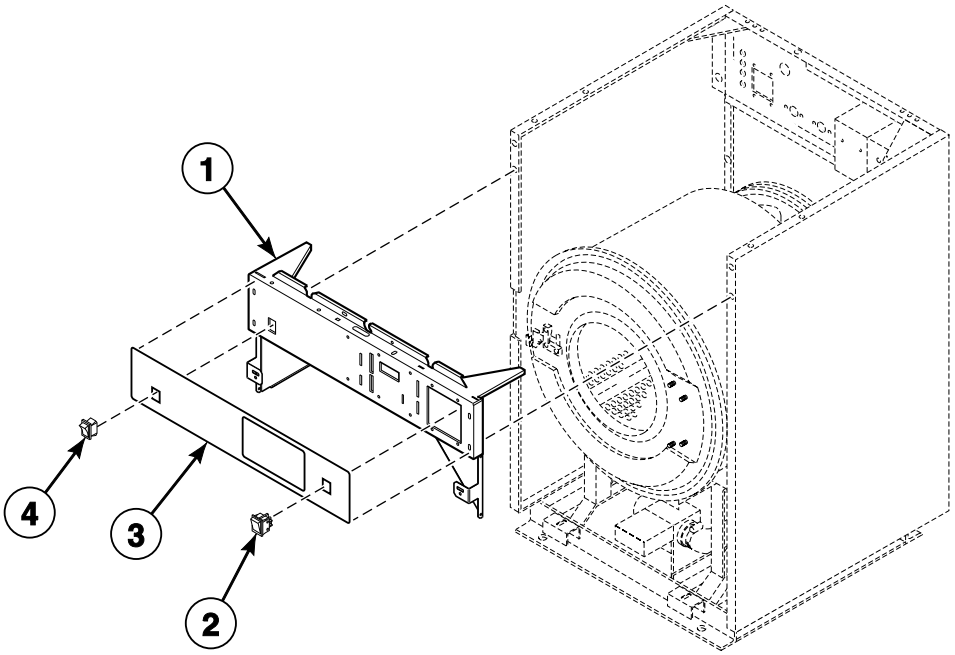

CHM2552P_F232193

© Copyright, Alliance Laundry Systems LLC – DO NOT COPY or TRANSMIT

Control Panel Assembly, Controls and Control Panel Decals - AN and BN Models

REF	PART NO.	DESCRIPTION	COMMENTS
1	N/A	Control Panel Assembly	
2	F340411	Rocker Switch	Red
3	F0231616-51	Control Panel Decal	Models SC80ANV and SC80BNV
	F0231593-51	Control Panel Decal	Models HC80ANV and HC80BNV
	F0231613-51	Control Panel Decal	Models UC80ANV and UC80BNV
4	F200120100	Momentary Switch	Models through 5/26/04
	F340412	Momentary Switch	Models starting 5/27/04

N/A = Part no longer available

© Copyright, Alliance Laundry Systems LLC – DO NOT COPY or TRANSMIT

Control Panel Assembly and Control Panel Decals - NC, NR, NX, NY, VC and VX Models

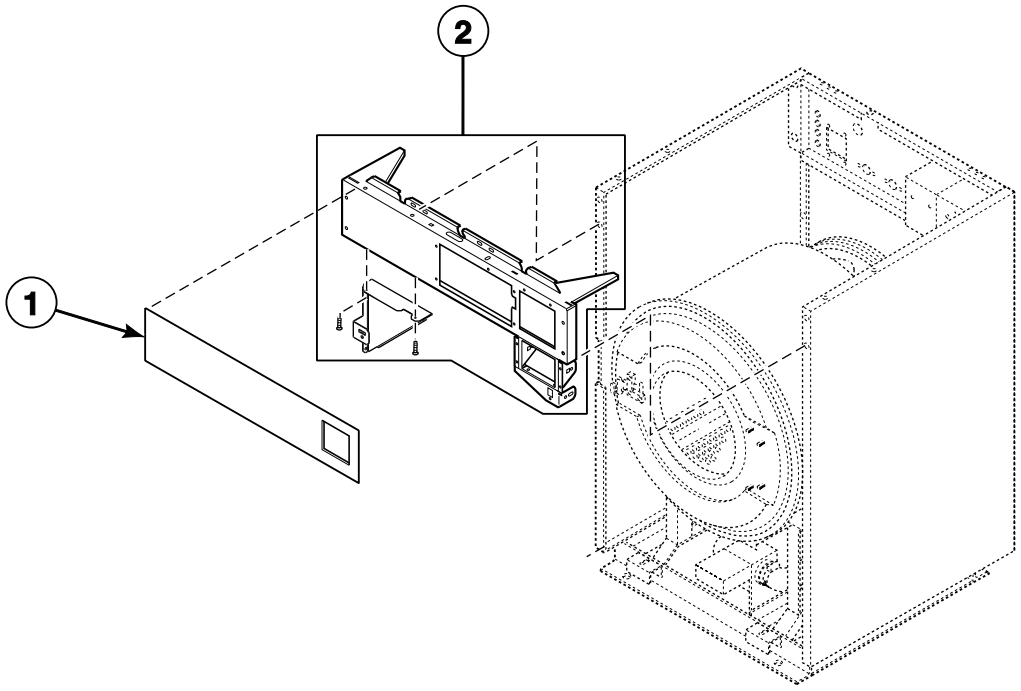

CHM2908P_F232193

© Copyright, Alliance Laundry Systems LLC – DO NOT COPY or TRANSMIT

Control Panel Assembly and Control Panel Decals - NC, NR, NX, NY, VC and VX Models

REF	PART NO.	DESCRIPTION	COMMENTS
1	F231524-1	Control Decal	Model SC80NCV; Single drop
	F231524-2	Control Decal	Model SC80NCV; Dual drop
	F231524-3	Control Panel Decal	Model SC80NXV
	F0231440-00	Control Panel Decal	Models SC80NRV and SC80NYV
	N/A	Control Panel Decal	Models HC80VCV and HC80VXV
2	N/A	Control Panel Assembly	Models HC80VCV and HC80VXV
	N/A	Control Panel Assembly	Models DC80NCV, SC80NCV, SC80NRV, SC80NXV and SC80NYV

N/A = Part no longer available

© Copyright, Alliance Laundry Systems LLC – DO NOT COPY or TRANSMIT

Control Panel Assembly and Control Panel Decals - VN Models

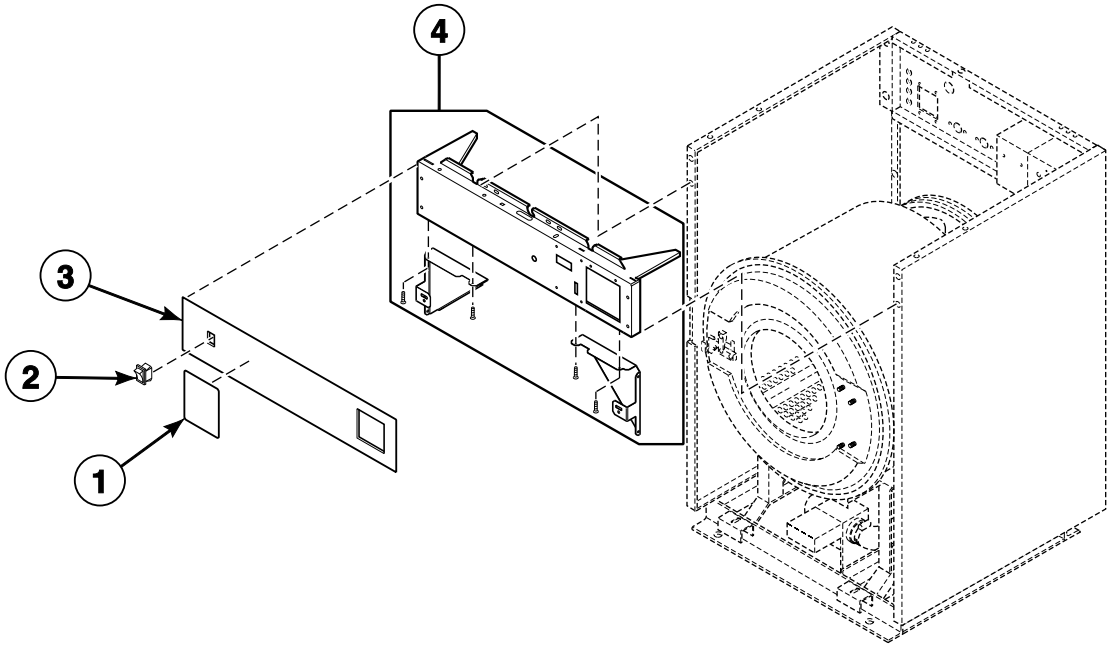

CHM3137P_F232193

© Copyright, Alliance Laundry Systems LLC – DO NOT COPY or TRANSMIT

Control Panel Assembly and Control Panel Decals - VN Models

REF	PART NO.	DESCRIPTION	COMMENTS
1	F231404	Overlay	Model SC80VNV
	F231402	Overlay	Model UC80VNV
	N/A	Overlay	Model HC80VNV
2	F340412	Momentary Switch	
3	F231471	Control Panel Decal	Model SC80VNV
	F231494	Control Panel Decal	Model UC80VNV
	F231549	Control Panel Decal	Model HC80VNV
4	N/A	Control Panel Assembly	

N/A = Part no longer available

© Copyright, Alliance Laundry Systems LLC – DO NOT COPY or TRANSMIT

Inner and Outer Front Panels

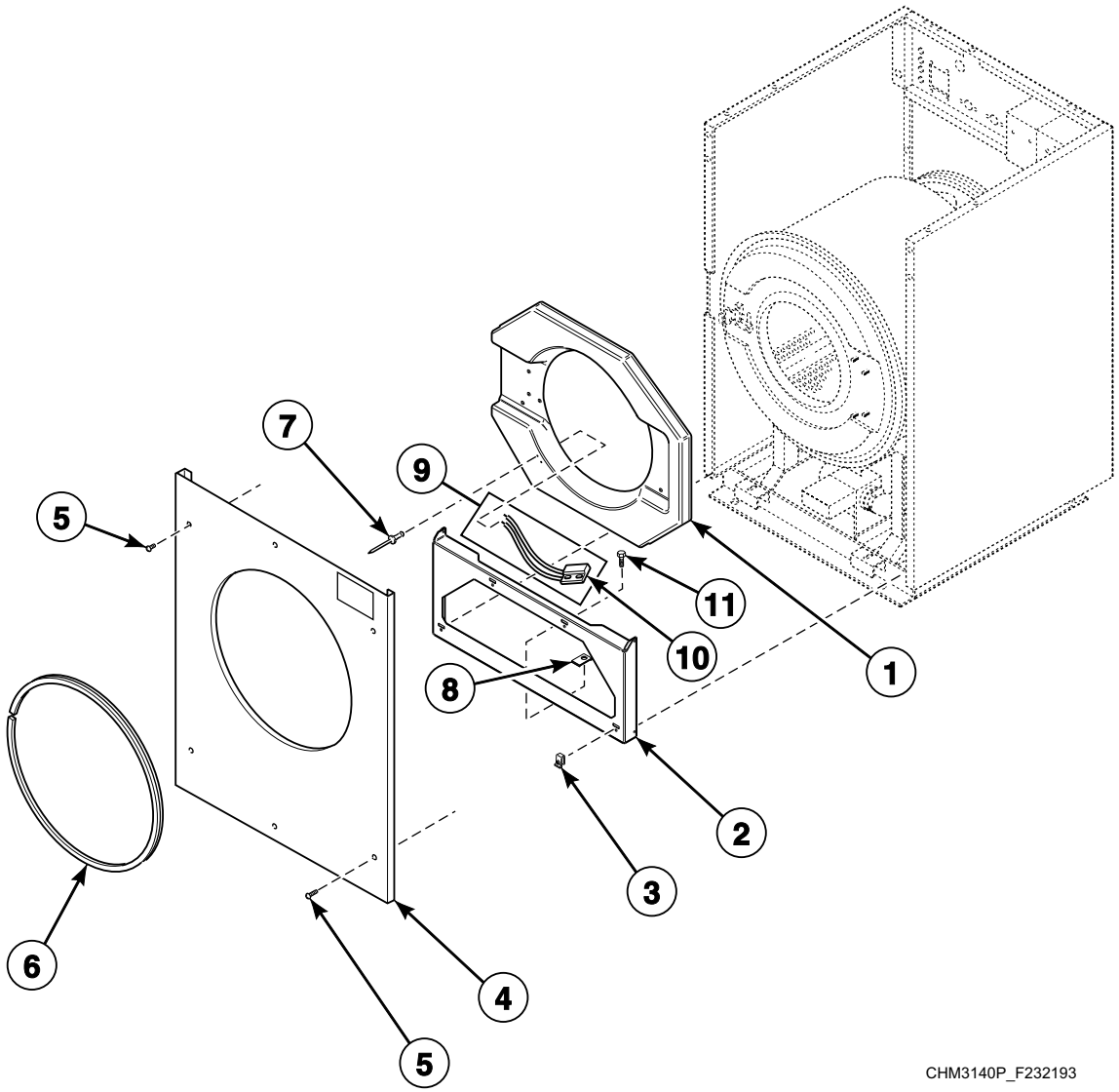

© Copyright, Alliance Laundry Systems LLC – DO NOT COPY or TRANSMIT

Inner and Outer Front Panels

REF	PART NO.	DESCRIPTION	COMMENTS
1	F170419-2	Door Bezel	HC models
	F8659301	Door Bezel	SC and UC models
2	F634804	Front Cabinet Brace	
3	F430264	Nut	
4	F8200702P	Front Panel	AL, AN, AY, BL, BN, BY, NY and VN models; Stainless steel
	F8200701P	Front Panel	AC, AX, BC, BX, NC, NR, NX, VC and VX models; Stainless steel
	F634688-2	Front Panel	AC, AX, BC, BX, NC, NR, NX, VC and VX models; Almond
	F634688-5	Front Panel	AC, AX, BC, BX, NC, NR, NX, VC and VX models; White
	N/A	Front Panel	AL, AN, AY, BL, BN, BY, NY and VN models; Almond
	F634818-5P	Front Panel	AL, AN, AY, BL, BN, BY, NY and VN models; White
5	F430956	Screw	
6	F8679201P	Trim	Models through 4/29/08; Requires F8142701 Adhesive for installation
7	J1111905	Blind Rivet	
8	F430264	Nut	
9	F200321300	Magnetic Switch Assembly	Includes item 10
10	F0340723-00	Magnetic Switch	
11	F430174	Screw	

N/A = Part no longer available

© Copyright, Alliance Laundry Systems LLC – DO NOT COPY or TRANSMIT

Cover Panels and Frame

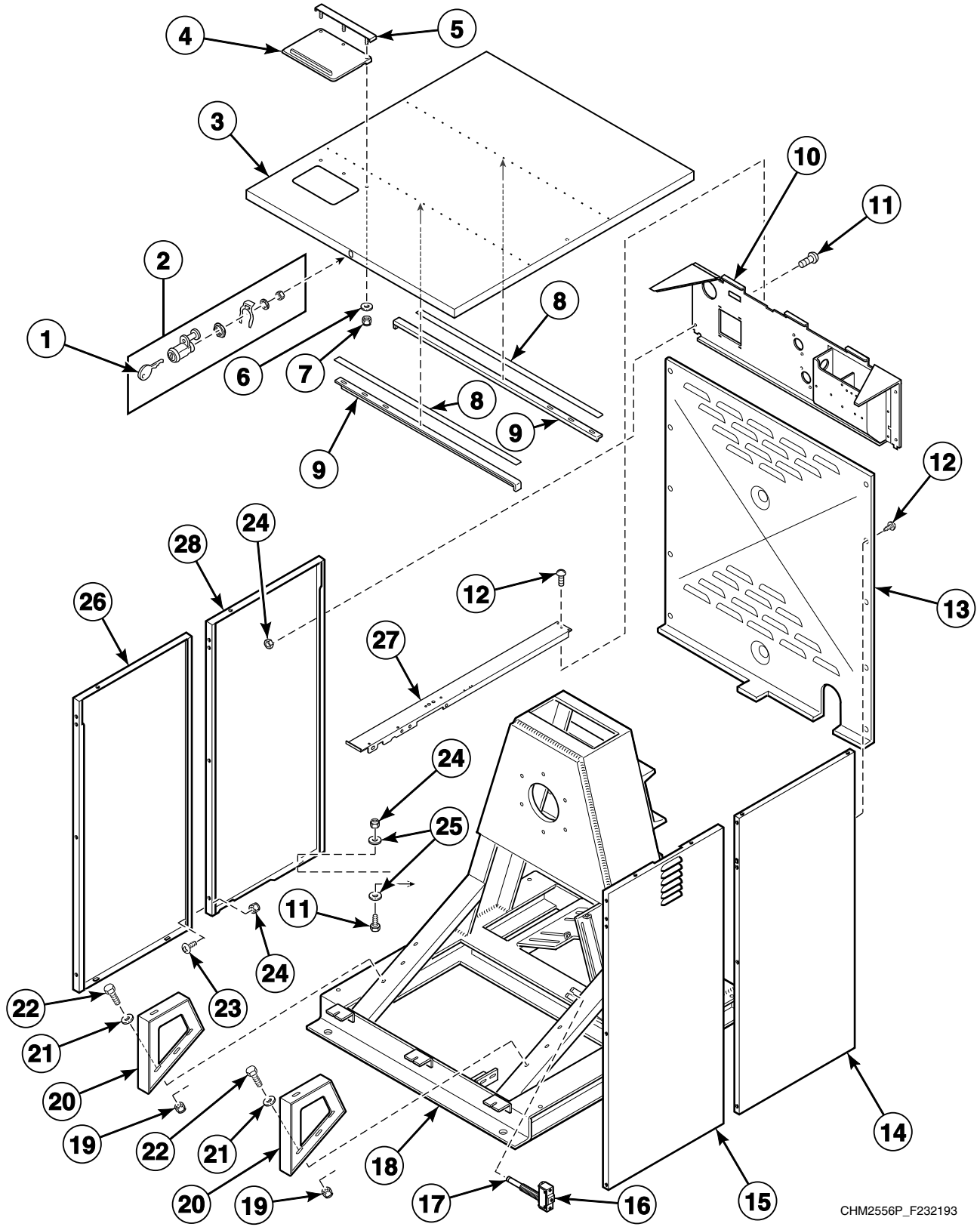

© Copyright, Alliance Laundry Systems LLC – DO NOT COPY or TRANSMIT

Cover Panels and Frame

REF	PART NO.	DESCRIPTION	COMMENTS
1	70155603	Key	
2	F0190808-00P	Lid Lock Pin	
3	F0636545-00P	Top Cover Assembly	Includes items 2, 4 and 5-9
4	F200270500	Supply Dispenser Lid	Gray
5	F630430	Lid Clamp Assembly	
6	F431147	Washer	
7	F431024	Nut	
8	F410212	Double-Coated Tape	Order 8 feet
9	F603980	Top Cover Stiffener	
10	F0636543-00	Valve Panel Assembly	
11	F430108	Screw	
12	F430174	Screw	
13	F603976	Rear Panel	
14	F0636546-00	Right Side Panel	Rear
15	F200218100	Side Panel Assembly	Right front; NC, NR, NX, NY, VC, VN and VX models
	F200180200	AC Drive Side Panel Assembly	Right front; AC, AL, AN, AX, AY, BC, BL, BN, BX and BY models
16	F340901	Switch	
17	F340913	Switch Extension	
18	F633673	Frame Assembly	
19	20274	Nut	
20	F603947	Support	
21	M400081	Washer	
22	800461	Screw	
23	F430925	Screw	
24	F430215	Nut	
25	F430317	Washer	
26	F0636547-00	Left Side Panel	Front
27	F0636549-00	Cabinet Top Brace	
28	F0636548-00	Left Side Panel	Rear

© Copyright, Alliance Laundry Systems LLC – DO NOT COPY or TRANSMIT

Door

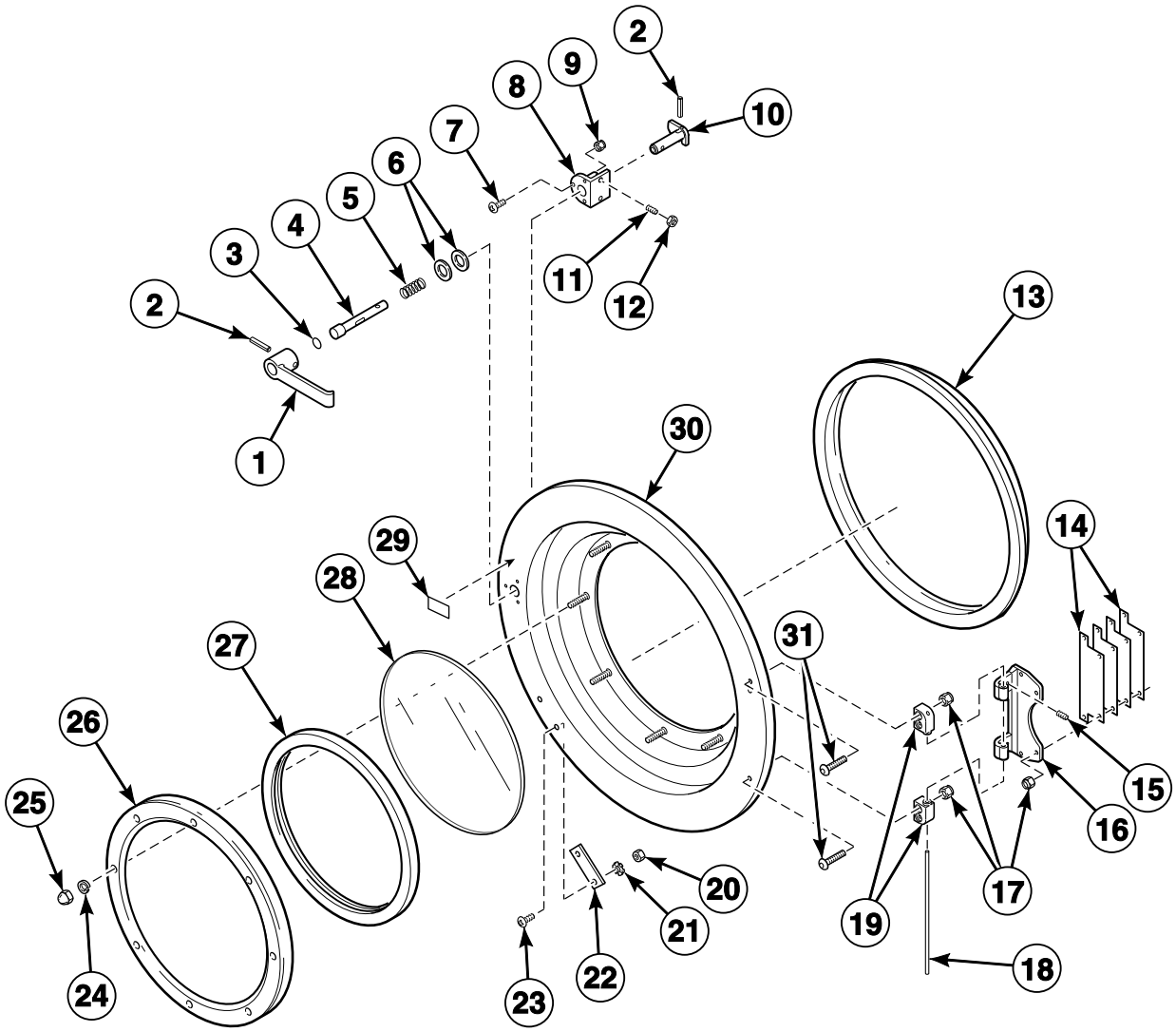

CHM2616P_F232193

© Copyright, Alliance Laundry Systems LLC – DO NOT COPY or TRANSMIT

Door

REF	PART NO.	DESCRIPTION	COMMENTS
	F8505107	Door Assembly	Includes items 1-9, 11-13 and 15-31
1	F150225	Door Handle	
2	F431222	Spring Pin	
3	F230662	Red Dot Decal	
4	F320300	Pushbutton Rod	
5	F310125	Door Lock Spring	
6	F431916	Washer	
7	F8535601	Screw	
8	F0150273-00	Door Spacer	
9	F430232	Nut	
10	F730155	Door Handle Kit	Includes items 1-6, 8, 11 and 12
11	F430532	Screw	
12	F431041	Nut	
13	F8440801P	Door Gasket	
14	F200131000P	Door Hinge Shim Kit	
15	F430536	Screw	
16	F190216P	Door Hinge	
17	F430215	Nut	
18	F602813-3	Rod	
19	F150271	Door Mount	
20	F431022	Nut	
21	F431113	Washer	
22	F8390801	Magnet	
23	F430916	Screw	
24	F431100	Washer	
25	F8549401	Nut	
26	F8504901	Door Glass Retainer	
27	F170115	Door Glass Gasket	
28	F290210P	Glass	
29	F230661	Push Red Button Decal	
30	F608782-2	Door Weldment	
31	F430974	Bolt	

© Copyright, Alliance Laundry Systems LLC – DO NOT COPY or TRANSMIT

Door Lock - AN, BN and VN Models

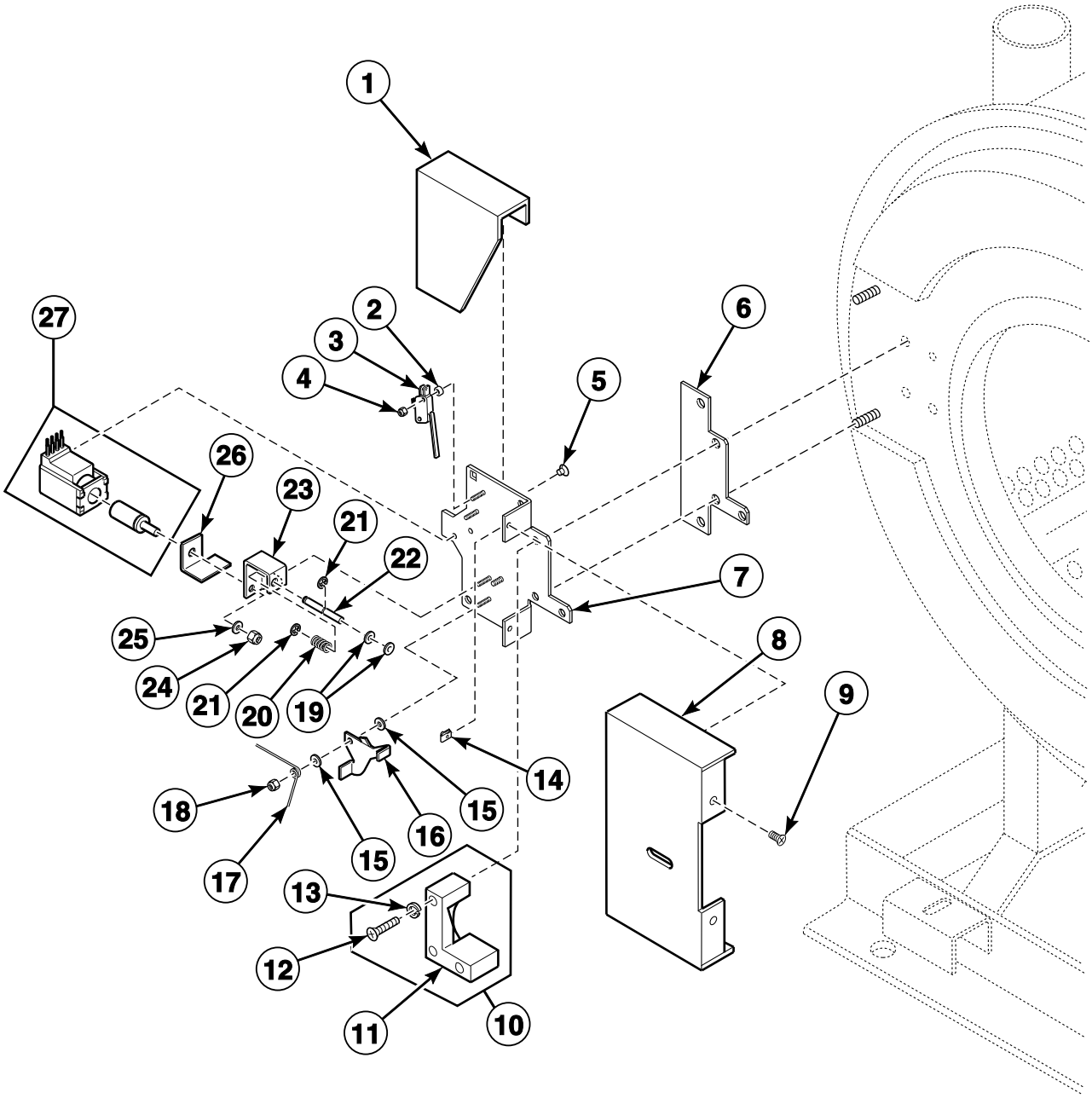

© Copyright, Alliance Laundry Systems LLC – DO NOT COPY or TRANSMIT

Door Lock - AN, BN and VN Models

REF	PART NO.	DESCRIPTION	COMMENTS
	F0798839-00	Door Lock Kit	B, F, H, N, O, P, Q and Y-voltage models through 8/1/04; Includes items F340923 Door Lock Microswitch, 2, 4, 5, 7 and 14-27
	F200136800P	Door Lock Assembly	B, D, E, F, H, J, O and Y-voltage models starting 8/2/04; Includes F200136600 Door Lock Harness, F8045001 Temperature Probe Assembly and F063667802 Door Lock Assembly
	F0798839-01	Door Lock Kit	C, D, E and J-voltage models through 8/1/04; Includes items F340923 Door Lock Microswitch, 2, 4, 5, 7 and 14-27
	F200136801	Door Lock Assembly	C-voltage models starting 8/2/04; Includes F200136601 Door Lock Harness, F8045001 Temperature Probe Assembly and F063667802 Door Lock Assembly
1	F320200	Door Lock Splash Shield	
2	F431901	Spacer	Nylon
3	F200203200	Door Lock Microswitch	
4	F430225	Nut	Nylon
5	F430977	Screw	
6	F8059701	Door Lock Plate Shim	
7	F8066701	Door Lock Plate Assembly	
8	F603003	Door Lock Assembly Cover	
9	F430956	Screw	
10	F746808	L-Catch Kit	Includes items 11-13
11	F150261	Door Lock Catch Casting	
12	F430982	Screw	
13	F431100	Washer	
14	F430264	Nut	
15	F431902	Washer	
16	F0636636-00	Door Lock Switch Lever	
17	F310110	Door Lock Torsion Spring	
18	F430232	Nut	Nylon
19	F431147	Washer	
20	F310137	Door Lock Pin Release Spring	
21	F310205	E-Ring Retainer	
22	F431231	Door Locking Linkage Pin	
23	F150455	Door Lock Pin Linkage	
24	F431017	Nut	
25	F431123	Washer	
26	F0636103-00	Door Lock Retainer Latch	
27	F300128P	Door Release Solenoid	Models through 8/1/04
	F0300131-00P	Door Lock Solenoid	Models starting 8/2/04

© Copyright, Alliance Laundry Systems LLC – DO NOT COPY or TRANSMIT

Door Lock - AC, AL, AX, AY, BC, BL, BX and BY Models

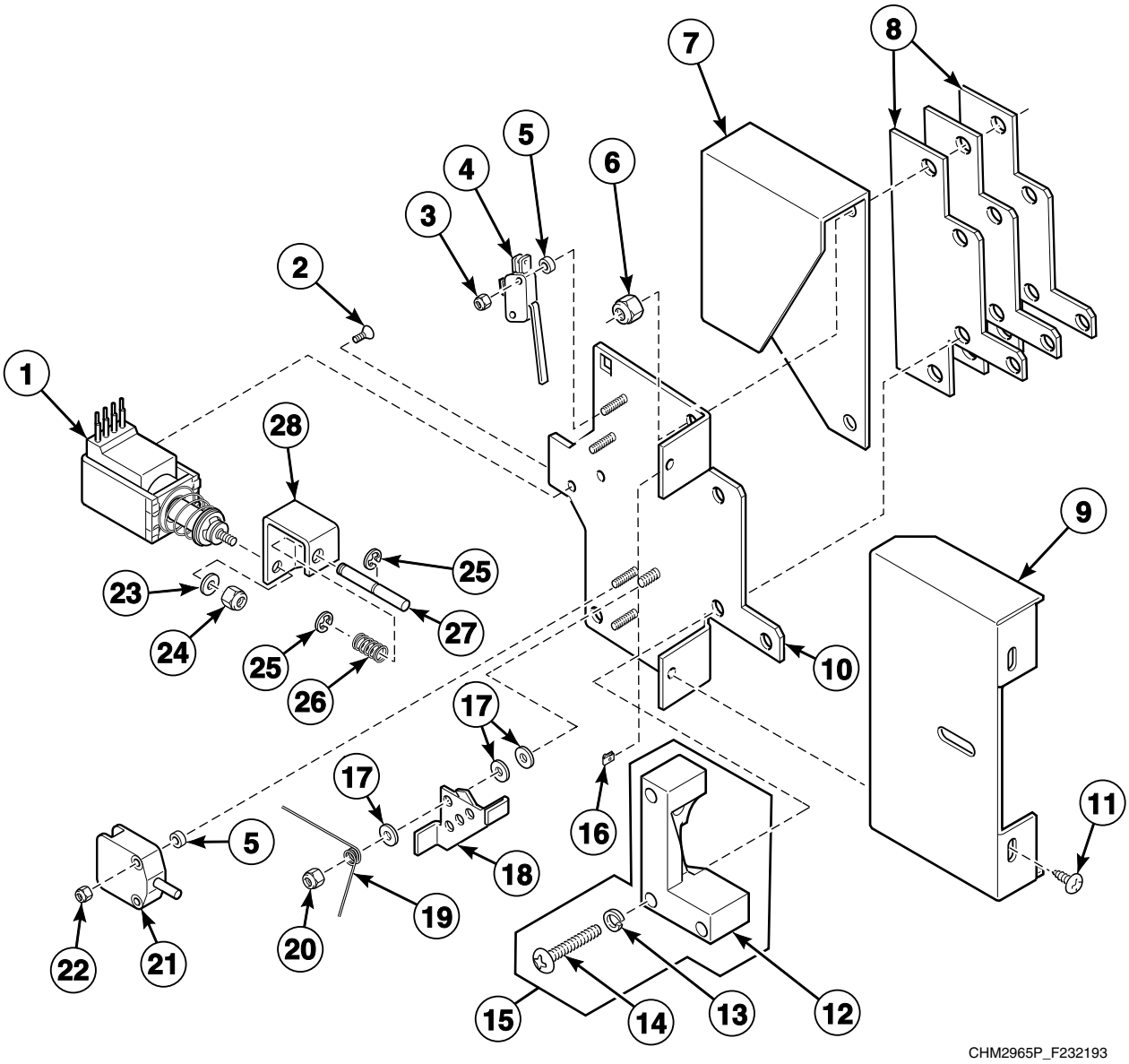

© Copyright, Alliance Laundry Systems LLC – DO NOT COPY or TRANSMIT

Door Lock - AC, AL, AX, AY, BC, BL, BX and BY Models

REF	PART NO.	DESCRIPTION	COMMENTS
	F200321402	Door Lock Assembly	Includes F063667701 Door Lock Sub-Assembly, F0636380-00 Door Lock Harness, F200136300 Door Lock Harness, F8746601 Magnetic Switch Assembly, F430225 Nut and F432297 Screw; Models without heat
	F200321403	Door Lock Assembly	Includes F063667701 Door Lock Sub-Assembly, F0636380-00 Door Lock Harness, F200136301 Door Lock Harness, F8746601 Magnetic Switch Assembly, F430225 Nut and F432297 Screw; Models with heat
	F063667701	Door Lock Sub-Assembly	Includes items 2-5, 10 and 15-27
1	F300124P	Solenoid	4 wire; Includes harness
2	F430977	Screw	
3	F430225	Nut	
4	F200203200	Door Lock Microswitch	
5	F431901	Spacer	
6	F430215	Nut	
7	F320200	Door Lock Splash Shield	
8	F8059701	Door Lock Plate Shim	
9	F603003	Door Lock Assembly Cover	
10	F8066701	Door Lock Plate Assembly	
11	F430956	Screw	
12	F150261	Door Lock Catch Casting	
13	F431100	Washer	
14	F430982	Screw	
15	F746808	L-Catch Kit	Includes items 12-14
16	F430264	Nut	
17	F431902	Washer	
18	F0636636-00	Door Lock Switch Lever	
19	F310110	Door Lock Torsion Spring	
20	F430232	Nut	
21	F340200	Door Switch	
22	F430231	Nut	
23	F431123	Washer	
24	F431017	Nut	
25	F310205	E-Ring Retainer	
26	F310137	Door Lock Pin Release Spring	
27	F431231	Door Locking Linkage Pin	
28	F150455	Door Lock Pin Linkage	

© Copyright, Alliance Laundry Systems LLC – DO NOT COPY or TRANSMIT

Door Lock - NC, NR, NX, NY, VC and VX Models

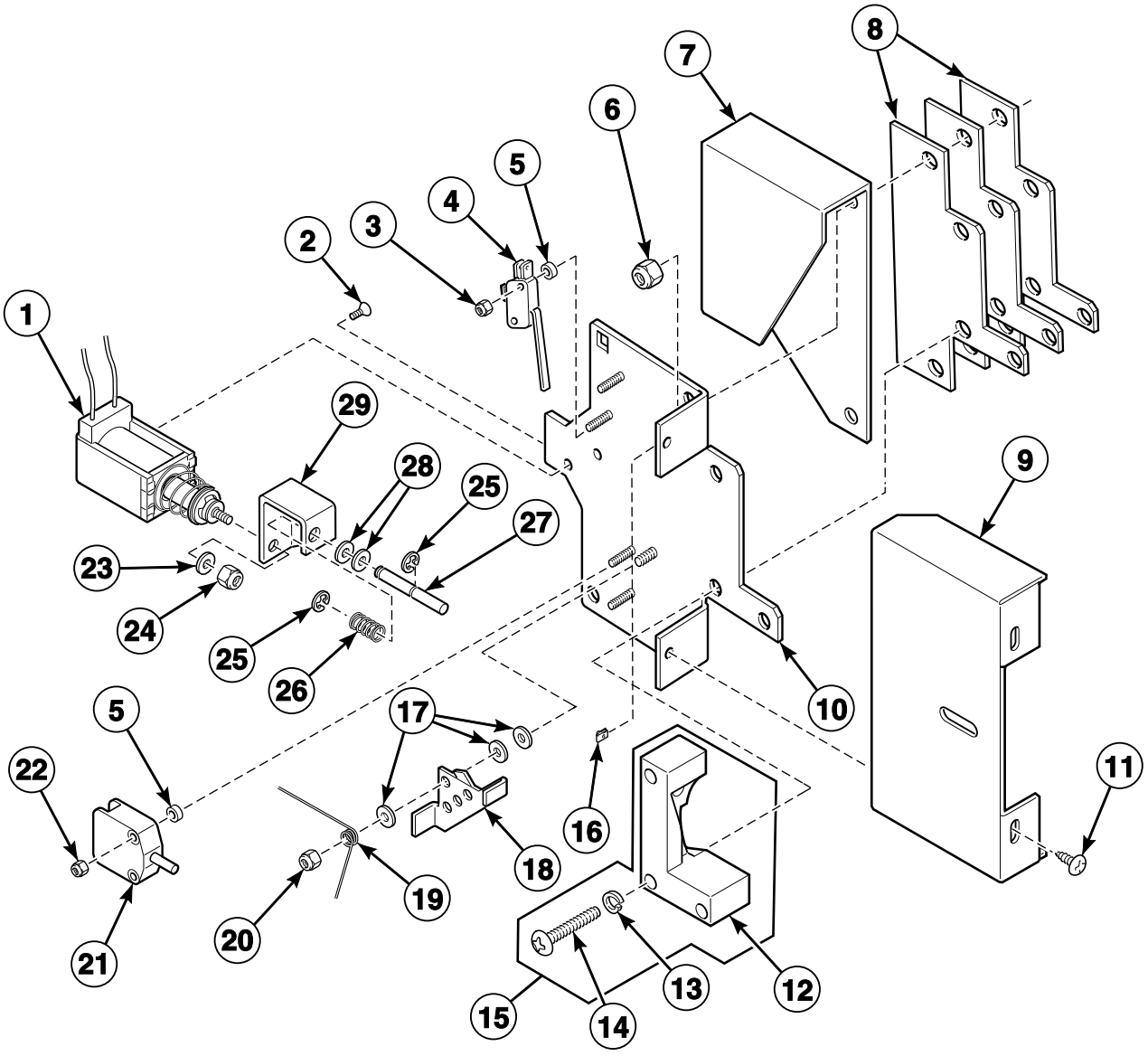

© Copyright, Alliance Laundry Systems LLC – DO NOT COPY or TRANSMIT

Door Lock - NC, NR, NX, NY, VC and VX Models

REF	PART NO.	DESCRIPTION	COMMENTS
	F0636698-01P	Door Lock Assembly	Models DC80NCV, SC80NCV, SC80NRV, SC80NXV and SC80NYV; Standard models; Includes F0631986-02 Door Lock Wire Harness, F8746601 Magnetic Switch Assembly and items 2-5, 10 and 15-28
	F0636698-03	Door Lock Assembly	Models SC80NCV, SC80NRV, SC80NXV and SC80NYV; Models with electric heat; Includes F0631986-04 Door Lock Wire Harness, F8746601 Magnetic Switch Assembly and items 2-5, 10 and 15-28
1	F300124P	Solenoid	4 wire; Models HC80VCV and HC80VXV; Includes harness
	F300125P	Solenoid	2 wire; Models DC80NCV, SC80NCV, SC80NRV, SC80NXV and SC80NYV
2	F430977	Screw	
3	F430225	Nut	
4	F200203200	Door Lock Microswitch	
5	F431901	Spacer	
6	F430215	Nut	
7	F320200	Door Lock Splash Shield	
8	F8059701	Door Lock Plate Shim	
9	F603003	Door Lock Assembly Cover	
10	F8066701	Door Lock Plate Assembly	
11	F430956	Screw	
12	F150261	Door Lock Catch Casting	
13	F431100	Washer	
14	F430982	Screw	
15	F746808	L-Catch Kit	Includes items 12-14
16	F430264	Nut	
17	F431902	Washer	
18	F0636636-00	Door Lock Switch Lever	
19	F310110	Door Lock Torsion Spring	
20	F430232	Nut	
21	F340200	Door Switch	
22	F430231	Nut	
23	F431123	Washer	
24	F431017	Nut	
25	F310205	E-Ring Retainer	
26	F310137	Door Lock Pin Release Spring	
27	F431231	Door Locking Linkage Pin	
28	F431147	Washer	
29	F150455	Door Lock Pin Linkage	

© Copyright, Alliance Laundry Systems LLC – DO NOT COPY or TRANSMIT

Fill Plumbing and External Supply (Drawing 1 of 3)

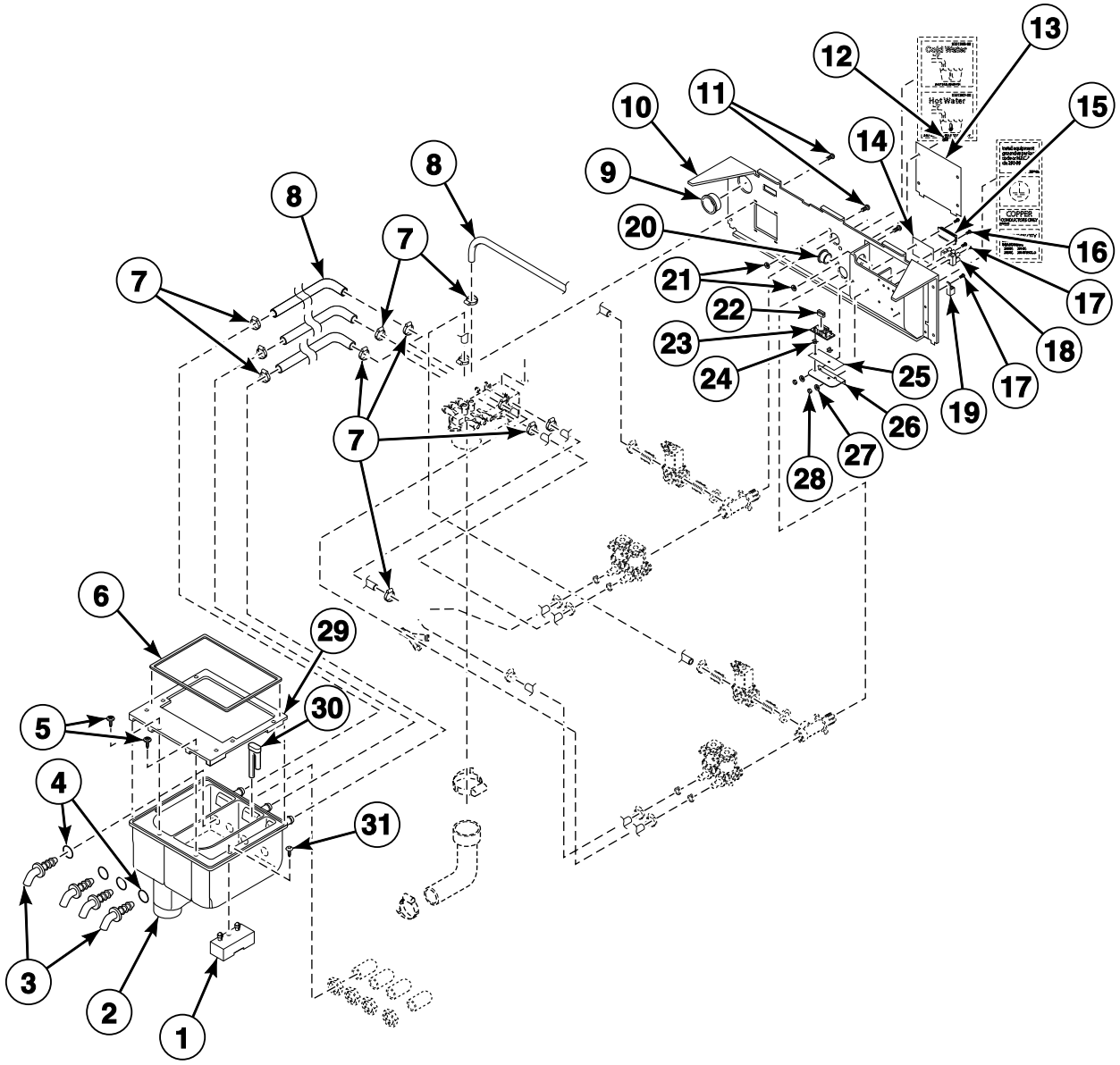

CHM2672P_F232193

© Copyright, Alliance Laundry Systems LLC – DO NOT COPY or TRANSMIT

Fill Plumbing and External Supply (Drawing 1 of 3)

REF	PART NO.	DESCRIPTION	COMMENTS
1	F0150504-00	Supply Dispenser Standoff	
2	F200202201P	Supply Dispenser Assembly	Includes items 1, 2-6 and 36-40
	F602374	Supply Dispenser Sub-Assembly	Models HC80VNV, SC80VNV and UC80VNV
3	F8322001	Injection Nozzle	
	F730168	Injection Nozzle Kit	Includes items 4 and 40
4	801632	O-Ring	
5	F430956	Screw	
6	F0170190-00P	Bezel Gasket	
7	36801	Hose Clamp	No. 6
8	F200108P	Water Hose	
9	F200139500	Grommet	
	F180511	Cap Plug	
10	F0636543-00	Valve Panel Assembly	Standard models
	F0636543-01	Valve Panel Assembly	Models with heat
11	F430929	Screw	
12	F430174	Screw	
13	F602533	Input Power Connection Box Cover	
14	F231376-5	External Supply Connection Decal	Q-voltage
	F231376-6	External Supply Connection Decal	N and P-voltage
15	F140766	Terminal	8 place
16	F430916	Screw	
17	F430903	Screw	
18	F140748	Input Power Block	2 terminal
	F140747	Input Power Block	3 terminal; Standard models
	M413865	Power Distribution Block	3 terminal; Electric heat models
19	F140734	Ground Terminal Lug	
20	F140938	Snap Bushing	
21	F430322	Washer	
22	F350115	Fuse	3 Amp
23	F0350312-10	Fuse Holder	
24	F180506	Standoff	
25	F231271	External Supply Fuse Decal	3 Amp
26	F633512	Fuse Holder Bracket	
27	F431113	Washer	
28	F431022	Nut	
29	F0150503-00	Supply Dispenser Bezel	
30	F150390	Siphon Tube	
31	F0430268-00	Screw	

© Copyright, Alliance Laundry Systems LLC – DO NOT COPY or TRANSMIT

Fill Plumbing and External Supply (Drawing 2 of 3)

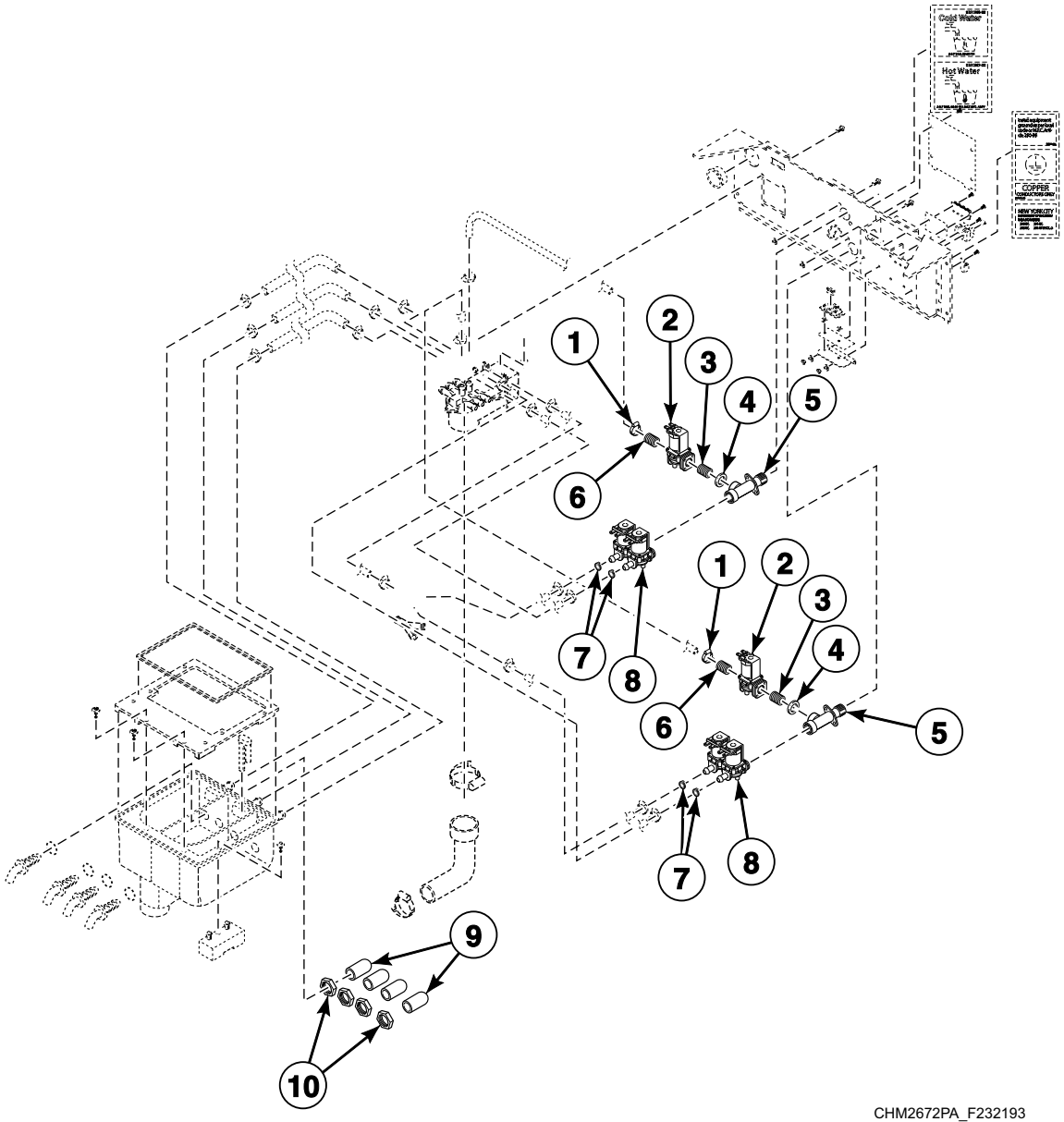

© Copyright, Alliance Laundry Systems LLC – DO NOT COPY or TRANSMIT

Fill Plumbing and External Supply (Drawing 2 of 3)

REF	PART NO.	DESCRIPTION	COMMENTS
	F8514801	Valve Coil	Use with F8322807 Valve
	F8514601P	Coil	Use with F8322803 Valve
	F8514701	Coil	Use with F8322909 Steam Valve
	F8382301	DIN Valve Adapter Kit	Use with F8322801P Valve and F8322804 Valve
	F8379503P	Valve Transition Kit	Use with F8322803 Valve and F8322807 Valve
	F8379504	Valve Rebuild Kit	Use with F8322909 Steam Valve
	F380986P	DIN Coil	120 Volt; Parker
1	36801	Hose Clamp	No. 6
2	F8322807P	Valve	Replaces F381732P 1-Way Valve; Includes F8322807 Valve, F8382301 DIN Valve Adapter Kit and F8514801 Valve Coil; 1/2 inch; 24 Volt
	F8322909P	Valve	Replaces F381700P Valve; Includes F8322909 Steam Valve, F8382301 DIN Valve Adapter Kit and F8514701 Coil; 3/4 inch; 120 Volt
	F8322803P	Valve	Replaces F381703P Valve; Includes F8322803 Valve, F8382301 DIN Valve Adapter Kit and F8514601 Coil; 1/2 inch; 240 Volt
	F8521801	DIN Valve Kit	
3	F421969	Nipple	
4	20290	Washer	
5	F150246	Water Connection Inlet Manifold	Standard thread
	F150247	Water Connection Inlet Manifold	Metric thread
6	F421930	Hose Barb	
7	F380119	Flow Restrictor	
8	F0381751-00P	2-Way Valve	220 Volt
	F381721P	2-Way Valve	Models DC80NCV and SC80NCV; 24 Volt
	F381722P	2-Way Valve	Models HC80VNV, HC80VXV, SC80VNV and UC80VNV; 120 Volt
9	F190303	Cap	
10	802292	Nut	

© Copyright, Alliance Laundry Systems LLC – DO NOT COPY or TRANSMIT

Fill Plumbing and External Supply (Drawing 3 of 3)

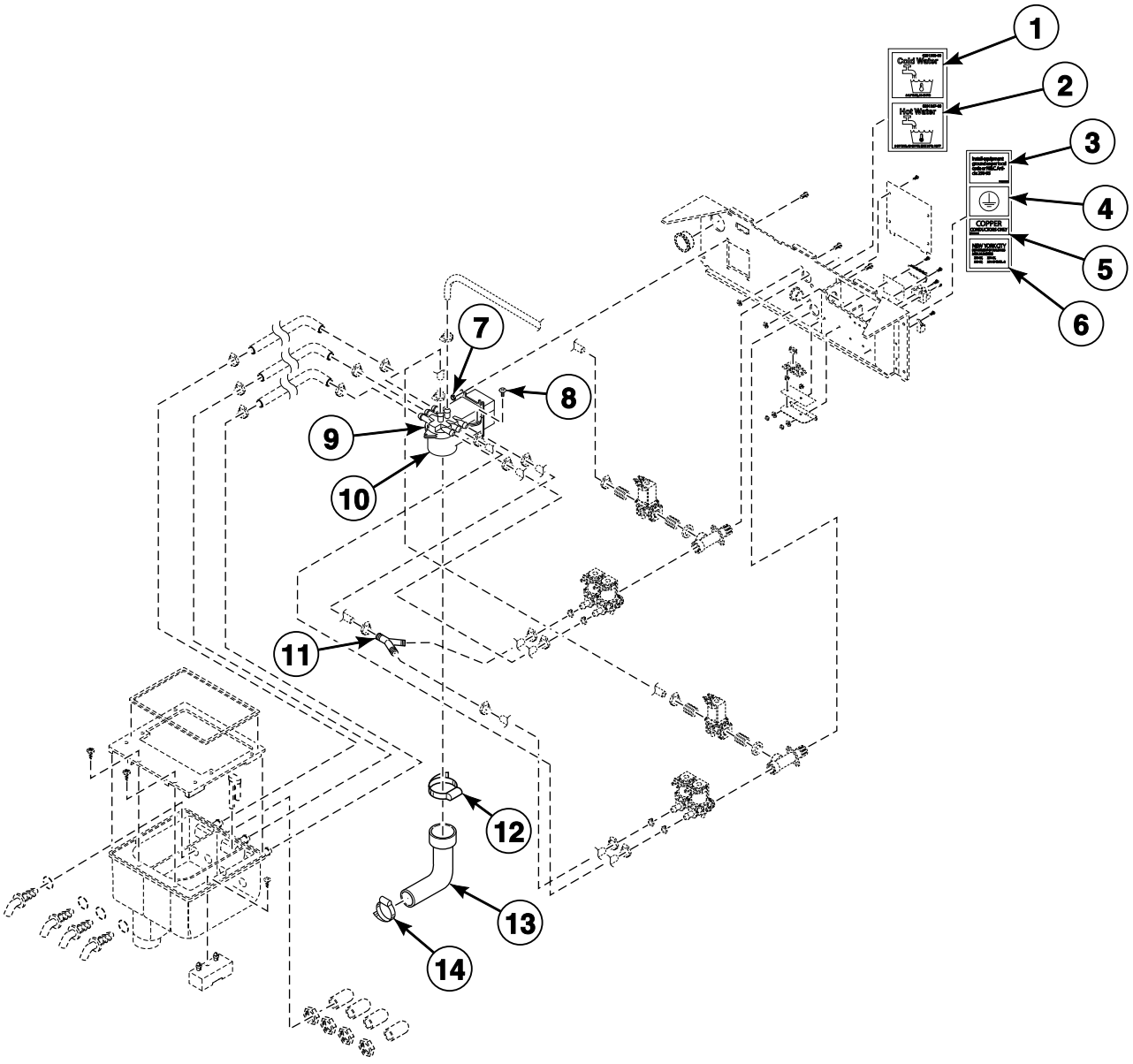

CHM2673P_F232193

© Copyright, Alliance Laundry Systems LLC – DO NOT COPY or TRANSMIT

Fill Plumbing and External Supply (Drawing 3 of 3)

REF	PART NO.	DESCRIPTION	COMMENTS
1	F0231368-00	Cold Water Valve Decal	
2	F0231367-00	Hot Water Valve Decal	
3	F230630	Ground Decal	
4	F230739	Ground Decal	
5	F231146	Conductor Decal	Copper conductor
6	N/A	Decal	New York MEA
7	F430231	Nut	
8	F430177	Screw	
9	F0150329-00	Vacuum Breaker Top	
	F603031	Vacuum Breaker Assembly	Includes items 8 and 10
10	F015033000	Vacuum Breaker Bottom	
11	F422808	Y Connector	
12	F200201	Hose Clamp	No. 48
13	F150492	Rear Fill Hose	
14	F200213	Hose Clamp	No. 40

N/A = Part no longer available

© Copyright, Alliance Laundry Systems LLC – DO NOT COPY or TRANSMIT

Water Supply Hose and Filter (Optional)

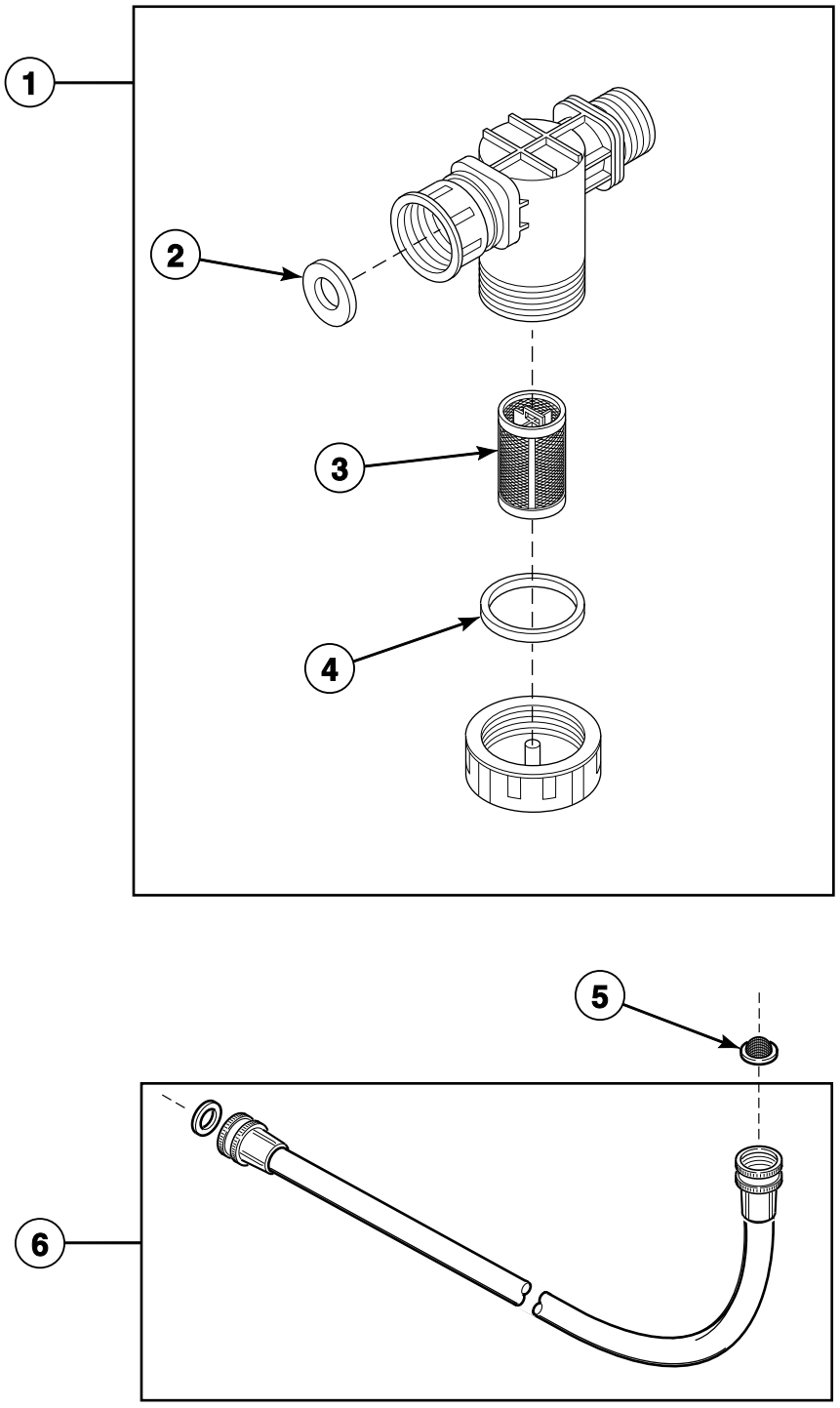

B091P_F232193

© Copyright, Alliance Laundry Systems LLC – DO NOT COPY or TRANSMIT

Water Supply Hose and Filter (Optional)

REF	PART NO.	DESCRIPTION	COMMENTS
1	F270306P	Filter	Hose thread
	F270305	Filter	Metric thread
2	20290	Washer	
3	F270406	Replacement Filter	.11 mm
	F270405	Replacement Filter	.25 mm
4	F270407	Filter Housing Cap Gasket	
5	803615	Washer	Filter
6	F200116	Fill Hose	3/8 inch; Hose thread
	F200164	Water Hose	3/4 inch; Hose thread
	F200165	Water Hose	3/8 inch; Metric thread
	F200166	Water Hose	3/4 inch; Metric thread

© Copyright, Alliance Laundry Systems LLC – DO NOT COPY or TRANSMIT

Basket and Shell

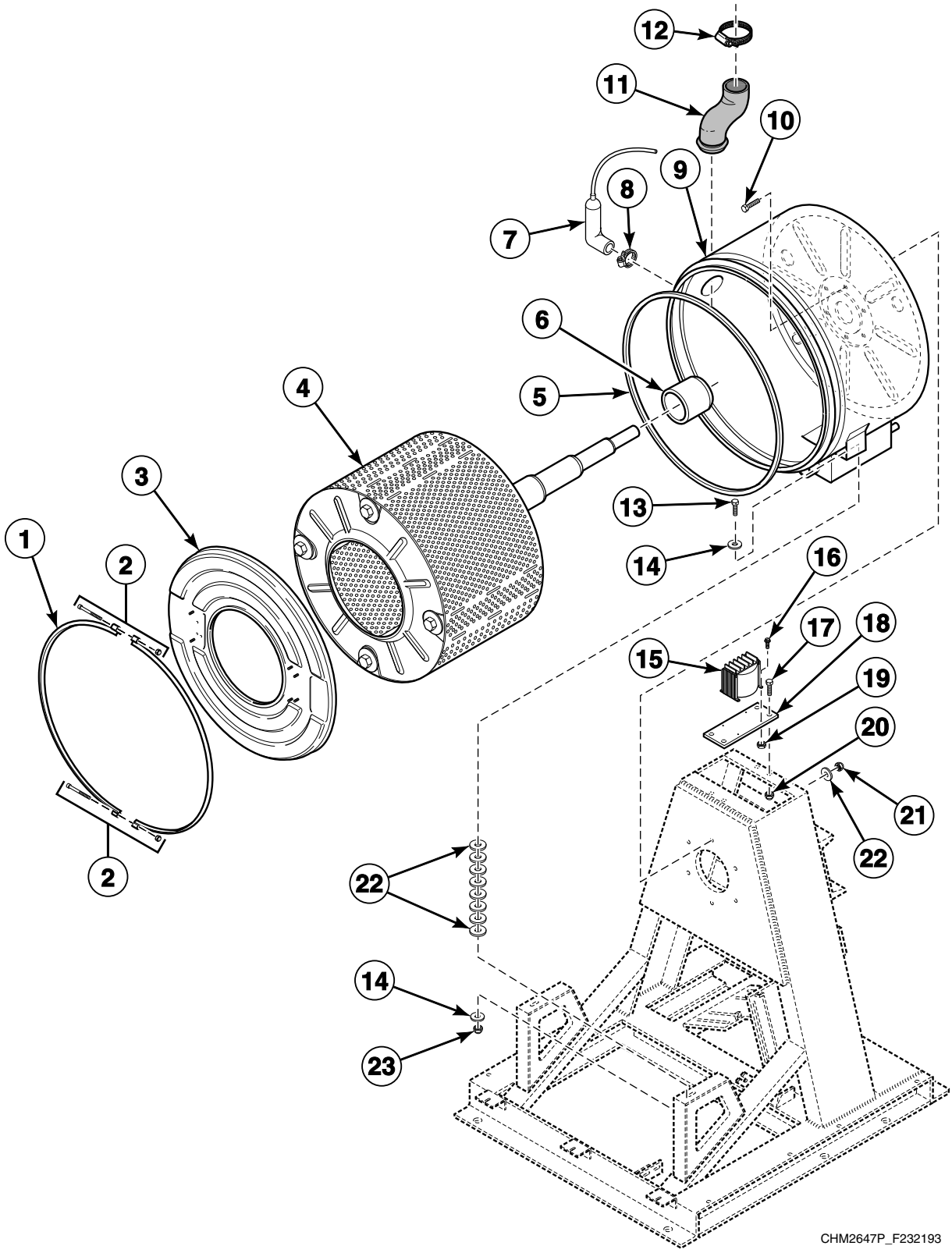

© Copyright, Alliance Laundry Systems LLC – DO NOT COPY or TRANSMIT

Basket and Shell

REF	PART NO.	DESCRIPTION	COMMENTS
1	F8537808	Shell Band Kit	Includes item 2
2	F791001	Shell Band Fastener Kit	
3	F603988P	Shell Front Assembly	
4	F8407401	Basket Assembly	Includes item 6
5	F792000	Shell Front Gasket Kit	
6	F8312007P	Shaft Seal Sleeve	
7	F020014200	Air Trap Hose	
8	36801	Hose Clamp	
9	F0636525-00	Shell Weldment	Standard models
	F0637017-00	Shell Weldment	Heat models
10	F430947	Screw	
11	F8061601	Supply Dispenser Hose	
12	F200213	Hose Clamp	No. 40
13	F430144	Screw	
14	M400081	Washer	
15	C000203	Transformer	Models HC80VCV and HC80VXV; Models HC80VNV, SC80VNV and UC80VNV through 8/1/04
	F360156P	Transformer	VN models starting 8/2/04; AC, AL, AN, AX, AY, BC, BL, BN, BX and BY models N and P-voltage
16	F430107	Screw	VC, VN and VX models; AC, AL, AN, AX, AY, BC, BL, BN, BX and BY models N and P-voltage
17	N/A	Screw	
18	F632745	Transformer Mounting Plate	VC, VN and VX models; AC, AL, AN, AX, AY, BC, BL, BN, BX and BY models N and P-voltage
19	F431017	Nut	
20	F430215	Nut	VC, VN and VX models; AC, AL, AN, AX, AY, BC, BL, BN, BX and BY models N and P-voltage
21	F430201	Nut	
22	901690	Washer	
23	F430218	Nut	

N/A = Part no longer available

© Copyright, Alliance Laundry Systems LLC – DO NOT COPY or TRANSMIT

Drain

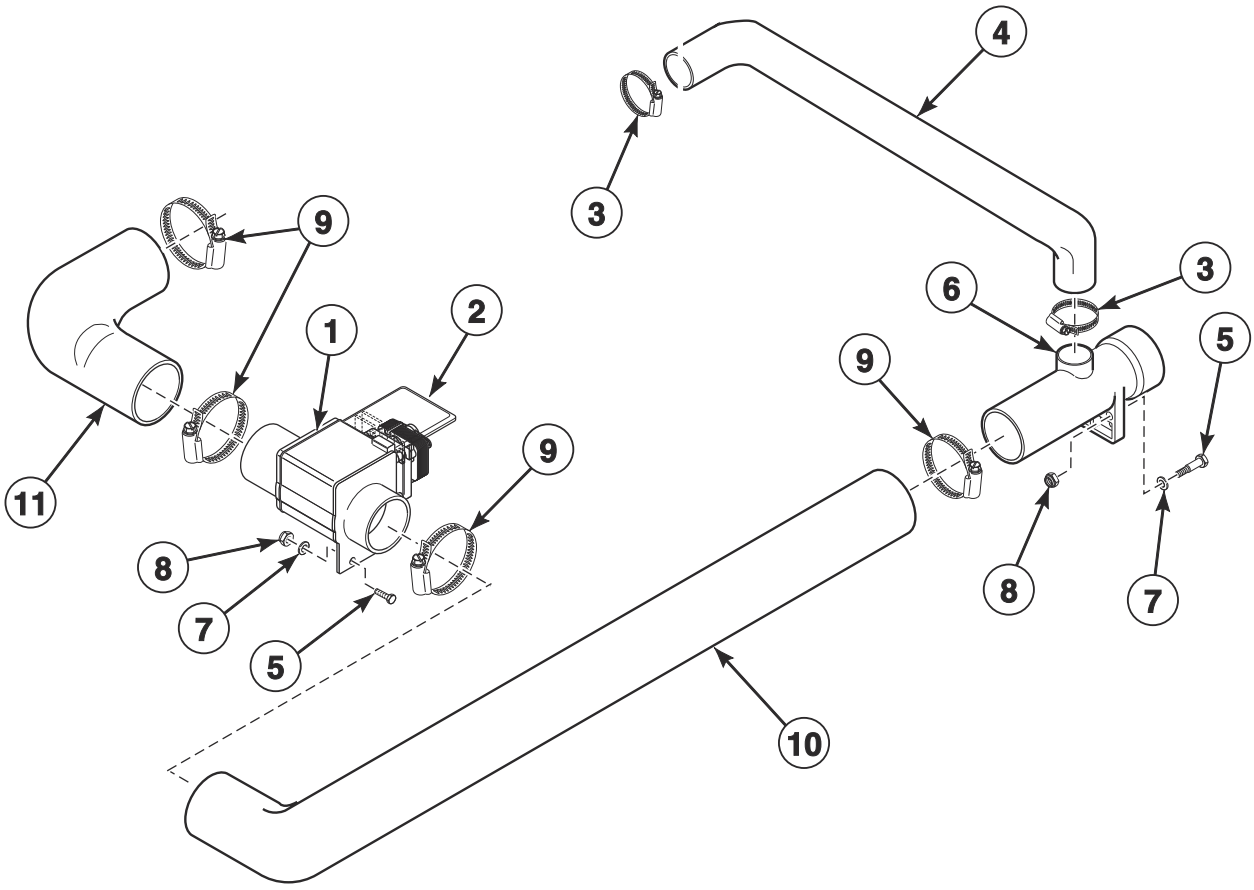

CHM3543P_F232193

© Copyright, Alliance Laundry Systems LLC – DO NOT COPY or TRANSMIT

Drain

REF	PART NO.	DESCRIPTION	COMMENTS
1	F8406302	Drain Valve	120 Volt; Models HC80VCV and HC80VXV; Models HC80VNV, SC80VNV and UC80VNV through 8/1/04
	F8602601	Drain Valve	220 Volt; NC, NR, NX and NY models; VN models starting 8/2/04; AC, AL, AN, AX, AY, BC, BL, BN, BX and BY models
2	F200133600	Drain Valve Cover	
3	F200213	Hose Clamp	No. 40
4	F150401	Overflow Hose	
5	F430103	Screw	
6	F8752101	Drain Tee	
7	F430317	Washer	
8	F430215	Nut	
9	F200201	Hose Clamp	No. 48
10	F0150399-00	Rear Drain Hose	Rear
11	F150400	Drain Hose	Front

N/A = Part no longer available

© Copyright, Alliance Laundry Systems LLC – DO NOT COPY or TRANSMIT

Motor, Pulley, Belts and Bearings

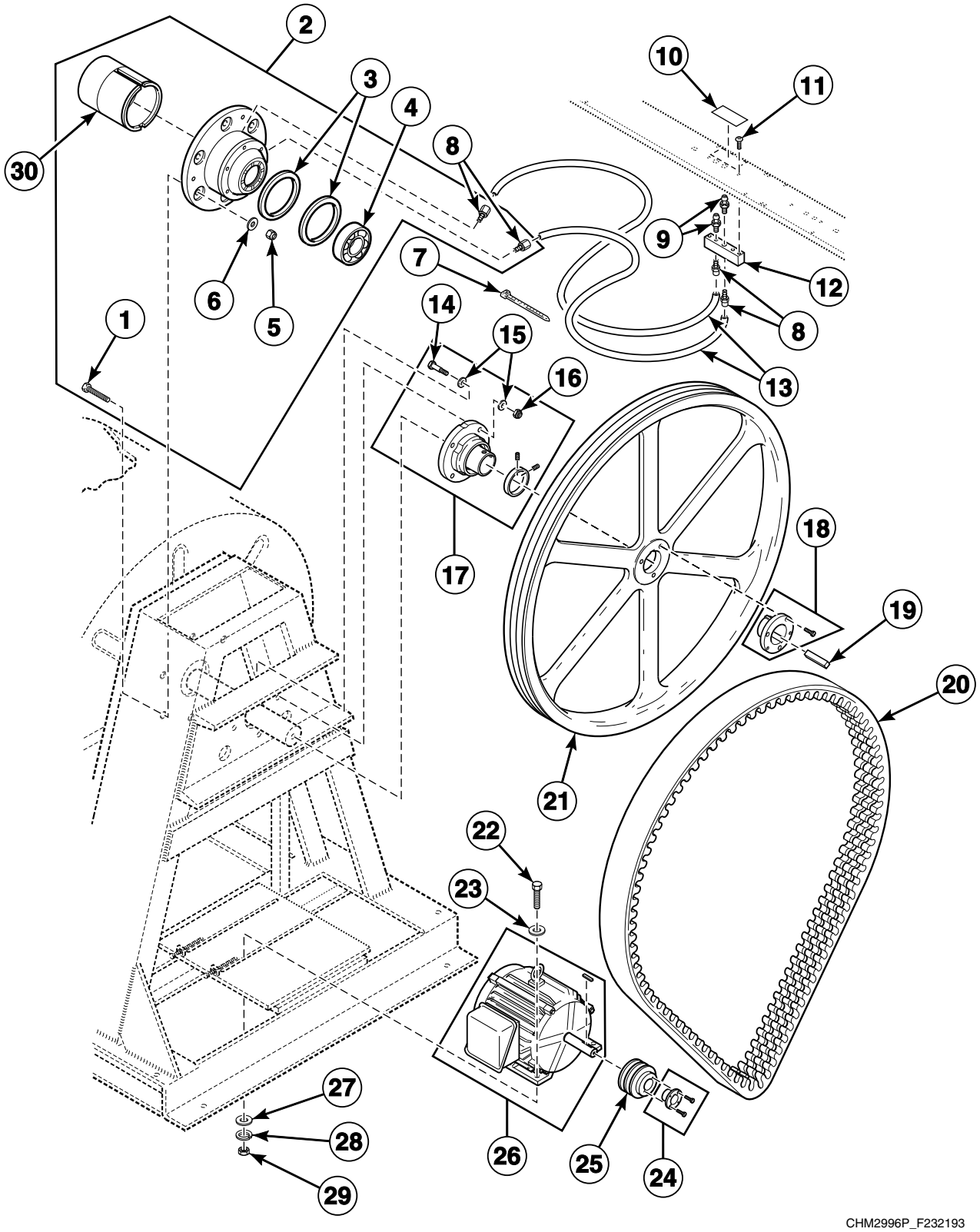

© Copyright, Alliance Laundry Systems LLC – DO NOT COPY or TRANSMIT

Motor, Pulley, Belts and Bearings

REF	PART NO.	DESCRIPTION	COMMENTS
1	F430947	Screw	
2	F745015-1	Front Bearing Kit	Includes items 1, 3-6, 8 and 30
3	F8203804	Triple Lip Seal	
4	F100155	Bearing	
5	F430201	Nut	
6	901690	Washer	
7	F140605	Cable Tie	
8	J1408004	Connector	
9	F190701	Grease Fitting	
10	F231078	Lubrication Instruction Decal	
11	F430925	Screw	
12	F320326	Grease Manifold	
13	C000628P	Tubing	
14	F430185	Screw	
15	F430339	Washer	
16	F430239	Nut	
17	F745016-1	Rear Bearing Kit	
18	F280290	Basket Pulley Bushing	Includes screws
19	F608824-1	Key	
20	F200140300P	Belt	
21	F150268	Basket Pulley	
22	F430993	Screw	
23	M400081	Washer	
24	F280211P	Motor Pulley Bushing	Includes screws
25	F280289P	Drive Motor Pulley	
26	F220236P	Motor	Includes key; Motor manufacturer Part No. 391994; AC drive parameters must be compatible with the motor being used. When replacing the motor, please request an AC drive parameter illustration for the motor to verify that the drive parameters are set correctly.
27	F430300	Washer	
28	M400014	Washer	
29	20274	Nut	
30	F100307	Bearing Adapter Sleeve	

© Copyright, Alliance Laundry Systems LLC – DO NOT COPY or TRANSMIT

Electric Heat Option - AC, AL, AN, AX, AY, BC, BL, BN, BX and BY Models

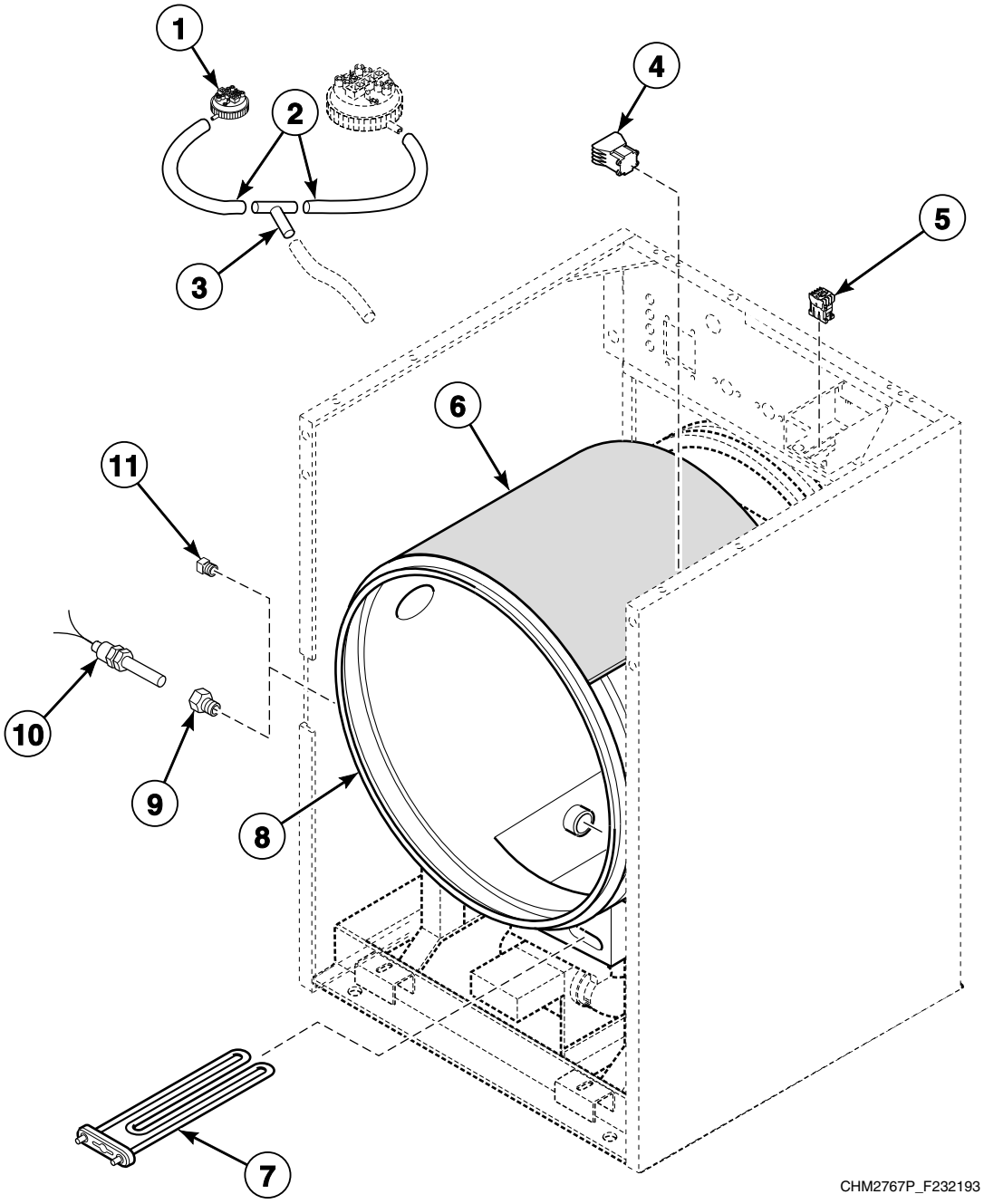

© Copyright, Alliance Laundry Systems LLC – DO NOT COPY or TRANSMIT

Electric Heat Option - AC, AL, AN, AX, AY, BC, BL, BN, BX and BY Models

REF	PART NO.	DESCRIPTION	COMMENTS
1	F8223001P	Water Pressure Switch	Heat safety
2	F422404P	Tubing	
3	F422806	Tee	
4	F330182	Contactor	C30; 220 Volt
5	F330177P	Contactor	C16; 220 Volt
6	F410301	Fiberglass Blanket	
7	F360205P	Element	2.6 kW; 12 used
8	F0637017-00	Shell Weldment	
9	F421936	Reducer Bushing	
10	F8045001	Temperature Probe Assembly	
11	F421507	Plug	

© Copyright, Alliance Laundry Systems LLC – DO NOT COPY or TRANSMIT

Electric Heat Option - NC, NR, NX, NY, VC, VN and VX Models

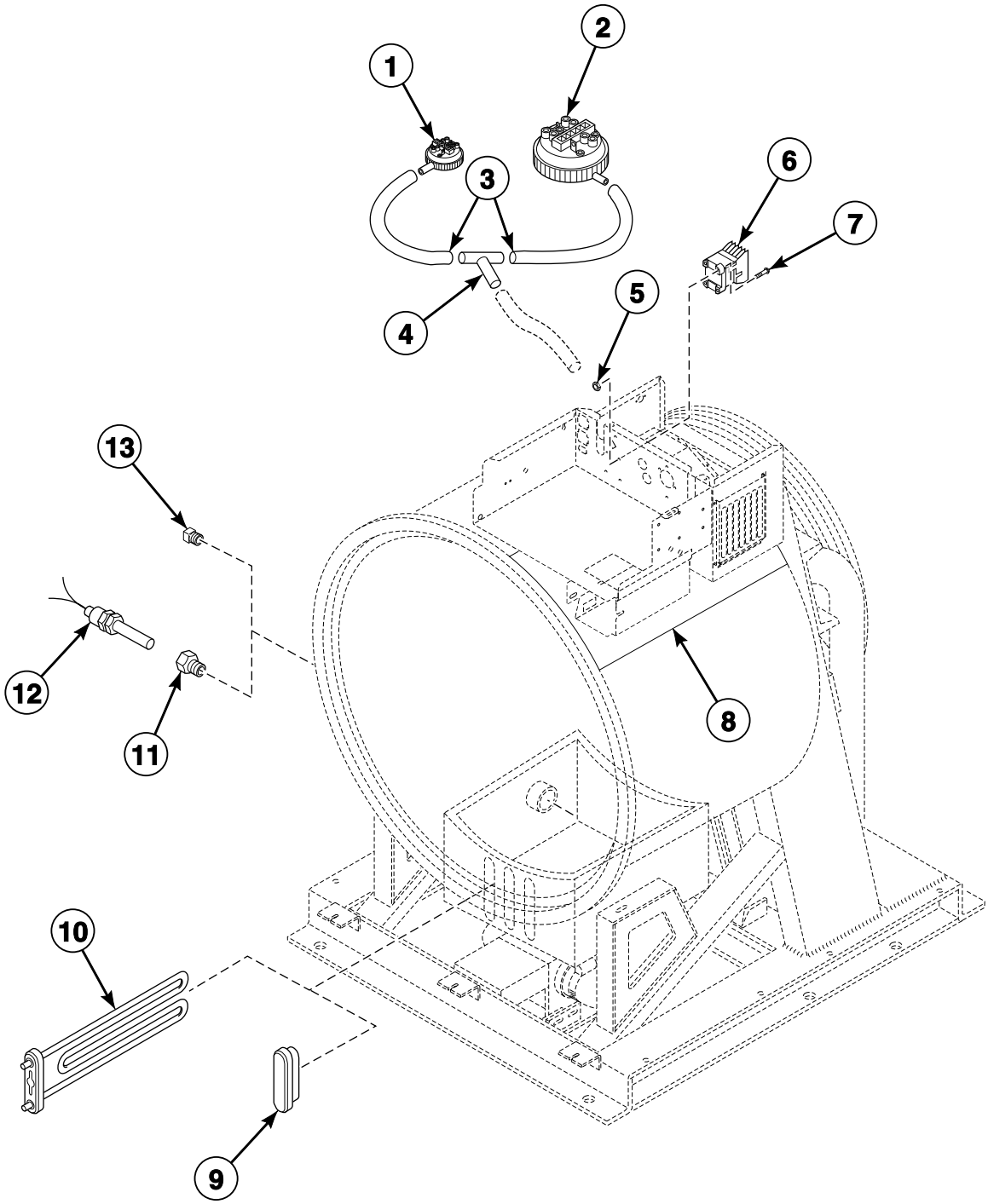

© Copyright, Alliance Laundry Systems LLC – DO NOT COPY or TRANSMIT

Electric Heat Option - NC, NR, NX, NY, VC, VN and VX Models

REF	PART NO.	DESCRIPTION	COMMENTS
1	F0340351-10P	Water Level Switch	Heat safety
2	F8223001P	Water Pressure Switch	Models HC80VCV, HC80VNV, HC80VXV, SC80VNV and UC80VNV
3	F422404P	Tubing	
4	F422806	Tee	
5	F430231	Nut	
6	F330163	Contactor	C30; 24 Volt; Q-voltage; Models DC80NCV, SC80NCV, SC80NRV, SC80NXV and SC80NYV
	F330180P	Contactor	C30; 120 Volt; Q-voltage; Models HC80VCV and HC80VXV; Models HC80VNV, SC80VNV and UC80VNV through 8/1/04
	F330182	Contactor	C30; 220 Volt; Q-voltage; Models HC80VNV, SC80VNV and UC80VNV starting 8/2/04
	F330175P	Contactor	C16; 120 Volt; N and P-voltage; Models HC80VNV, SC80VNV and UC80VNV through 8/1/04
	F330177P	Contactor	C16; 220 Volt; N and P-voltage; Models HC80VNV, SC80VNV and UC80VNV starting 8/2/04
7	F430917	Screw	
8	F410301	Fiberglass Blanket	
9	F360202	Heating Element Plug	
10	F360205P	Element	2.6 kW; 12 used
11	F421936	Reducer Bushing	
12	F370606P	Temperature Probe	Models HC80VCV, HC80VNV, HC80VXV, SC80VNV and UC80VNV
	F370609	Thermistor Sensor	Models DC80NCV, SC80NCV, SC80NRV, SC80NXV and SC80NYV
13	F421507	Plug	

© Copyright, Alliance Laundry Systems LLC – DO NOT COPY or TRANSMIT

Steam Heat Kit - AC, AL, AN, AX, AY, BC, BL, BN, BX and BY Models

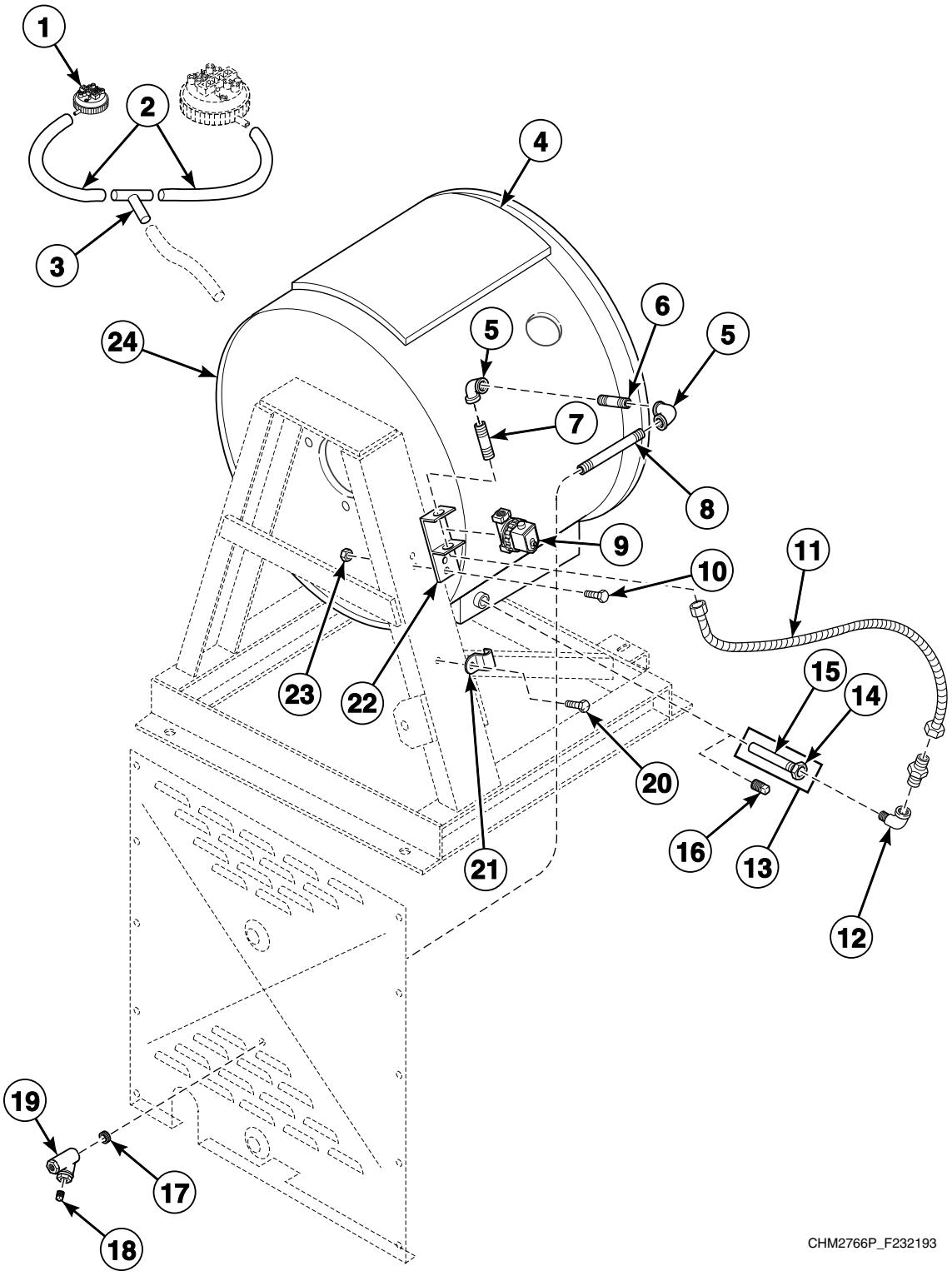

© Copyright, Alliance Laundry Systems LLC – DO NOT COPY or TRANSMIT

Steam Heat Kit - AC, AL, AN, AX, AY, BC, BL, BN, BX and BY Models

REF	PART NO.	DESCRIPTION	COMMENTS
	F8521501	DIN Valve Kit	Includes items 1, 8, 10, 11, 13, 15-21, F380787P Steam Valve and harness
	F380984P	Steam Valve Repair Kit	Use with F380787P Steam Valve
	F8514601P	Coil	Use with F8322801P Valve
	F8382301	DIN Valve Adapter Kit	Use with F8322801P Valve
	F8379501P	Valve Kit	Use with F8322801P Valve
1	F8223001P	Water Pressure Switch	Heat safety
2	F422404P	Tubing	
3	F422806	Tee	
4	F410301	Fiberglass Blanket	
5	70079601	Elbow	
6	F420710	Nipple	
7	F420709	Nipple	
8	F420718	Nipple	
9	F8322801P	Valve	Replaces F380787P Steam Valve on Design 1 models; Design 2 and 3; Includes F8514601 Coil; For models that have been upgraded with F8521801 DIN Valve Kit
	F8521801	DIN Valve Kit	Replaces F380787P Steam Valve on Design 1 models; Includes F8322801P Valve, F8382301 DIN Valve Adapter Kit and F8514601 Coil
10	F430108	Screw	
11	F200153P	Steam Hose	
12	H86070034	Street Elbow	
13	F8368201	Steam Injector Tube Assembly	
14	F603050	Bushing	
15	F603048	Steam Injection Tube	
16	F200202600	Plug	
17	N/A	Grommet	
18	F420409	Plug	
19	F270307	Steam Filter	
20	F430115	Screw	
21	N/A	Cable Strap	
22	F601186	Steam Bracket Assembly	
23	F430215	Nut	
24	F0637017-00	Shell Weldment	

N/A = Part no longer available

© Copyright, Alliance Laundry Systems LLC – DO NOT COPY or TRANSMIT

Steam Heat Option - VC, VN and VX Models

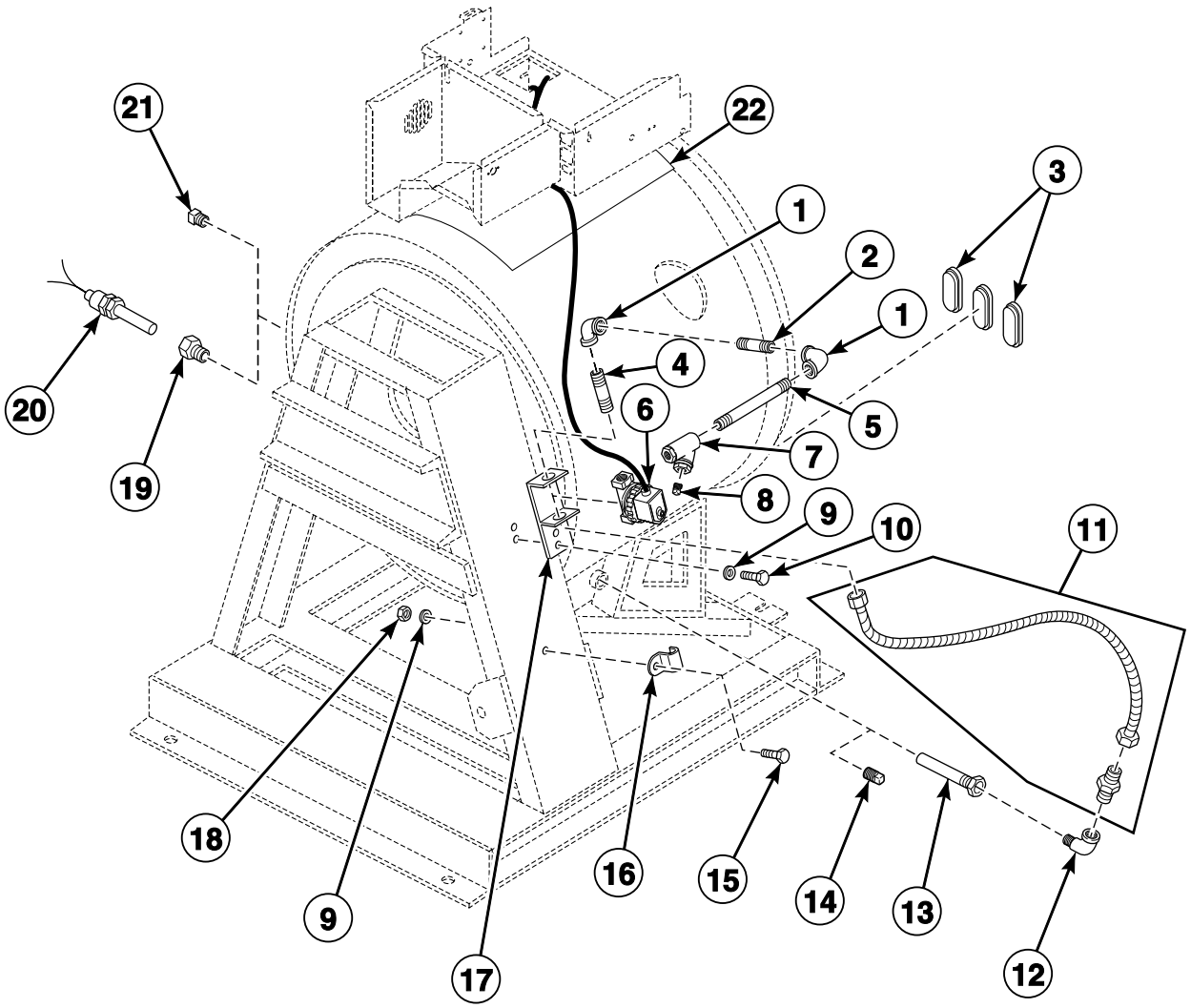

CHM2750P_F232193

© Copyright, Alliance Laundry Systems LLC – DO NOT COPY or TRANSMIT

Steam Heat Option - VC, VN and VX Models

REF	PART NO.	DESCRIPTION	COMMENTS
	F380984P	Steam Valve Repair Kit	Use with F380786P Steam Valve and F380787P Steam Valve
	F8514601P	Coil	Use with F8322801P Valve
	F8514701	Coil	Use with F8322802 Valve
	F8382301	DIN Valve Adapter Kit	Use with F8322801P Valve and F8322802 Valve
	F8379501P	Valve Kit	Use with F8322801P Valve and F8322802 Valve
	F380986P	DIN Coil	120 Volt; Parker
1	70079601	Elbow	
2	F420710	Nipple	
3	F360202	Heating Element Plug	
4	F420709	Nipple	
5	F420718	Nipple	
6	F8322802	Valve	Replaces F380786P Steam Valve; Includes F8514701 Coil; For models that have been upgraded with F8521601 DIN Valve Kit
	F8521601	DIN Valve Kit	Replaces F380786P Steam Valve; Includes F8322802 Valve and F8514701 Coil
	F8322801P	Valve	Replaces F380787P Steam Valve; Includes F8514601 Coil; For models that have been upgraded with F8521801 DIN Valve Kit
	F8521801	DIN Valve Kit	Replaces F380787P Steam Valve; Includes F8322801P Valve, and F8514601 Coil
7	F270307	Steam Filter	
8	F420409	Plug	
9	F430317	Washer	
10	F430108	Screw	
11	F200153P	Steam Hose	
12	H86070034	Street Elbow	
13	F8368201	Steam Injector Tube Assembly	
14	F200202600	Plug	
15	F430115	Screw	
16	N/A	Cable Strap	
17	F601186	Steam Bracket Assembly	
18	F430215	Nut	
19	F421936	Reducer Bushing	
20	F370606P	Temperature Probe	
21	N/A	Plug	
22	F410301	Fiberglass Blanket	

N/A = Part no longer available

© Copyright, Alliance Laundry Systems LLC – DO NOT COPY or TRANSMIT

Special Tools

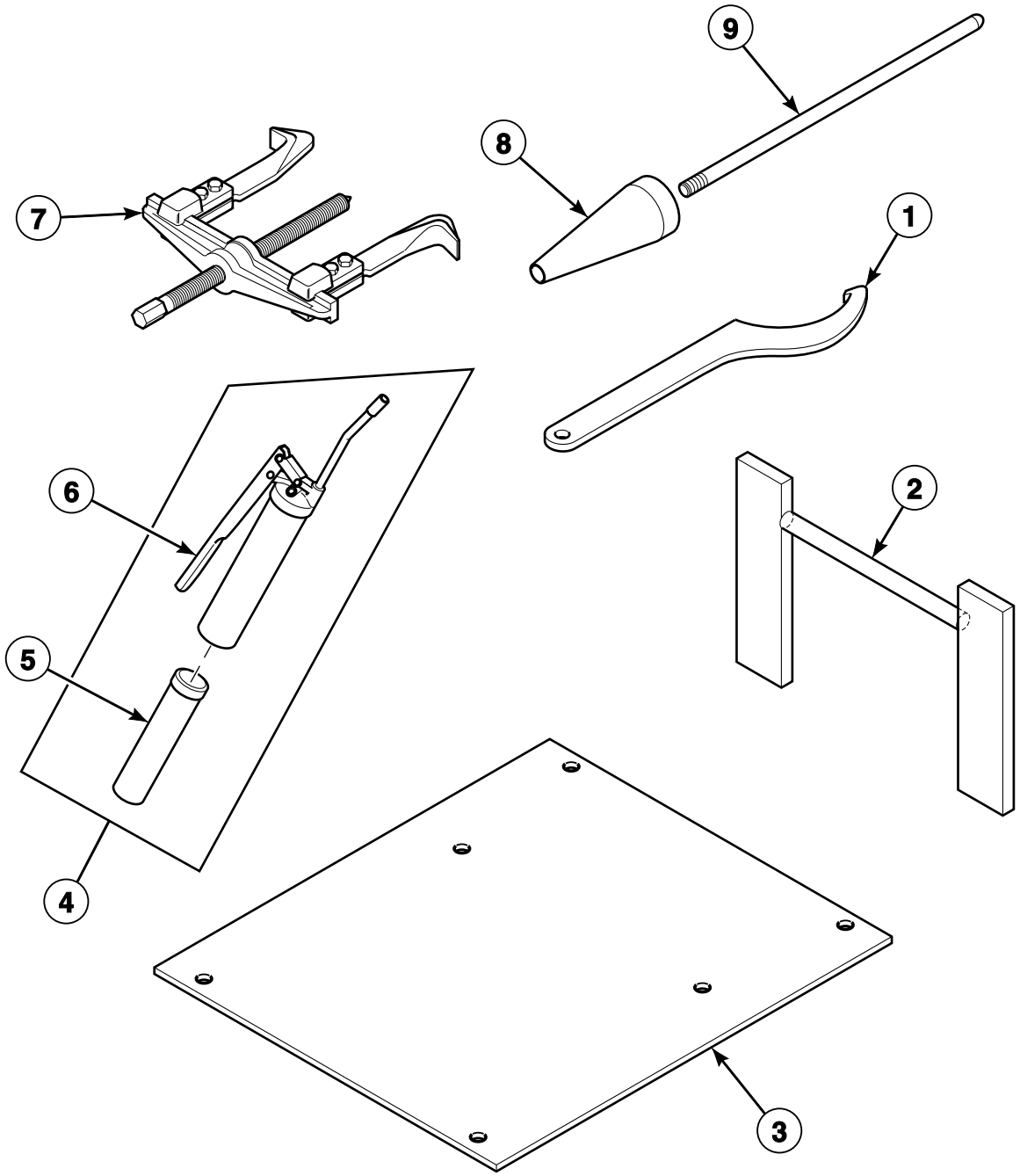

CHM2997P_F232193

© Copyright, Alliance Laundry Systems LLC – DO NOT COPY or TRANSMIT

Special Tools

REF	PART NO.	DESCRIPTION	COMMENTS
	F200040300P	Communication Box Kit	Standard; A-control
	F200041700P	Communication Box Kit	Icon; A-control
	F200041800P	Communication Box Kit	Icon; A-control
	F200098500P	Communication Box Kit	Standard; B-control
	F200098600P	Communication Box Kit	Icon; B-control
	F200098700P	Communication Box Kit	Icon; B-control
	F370851P	HIM Drive	Models with 160-series drive
1	F703654	Locknut Spanner Wrench	
2	F8608502P	Basket Pulley Puller Tool	
3	F609692	Bolt Layout Mounting Template	
4	F798700	Grease Gun Kit	Includes items 5 and 6
5	F210206P	Bearing Grease	
6	F210207P	Grease Gun	
7	F460129P	Basket Puller Tool	
8	399P4	Cone	
9	401P4	Basket Installation Tool Rod	

© Copyright, Alliance Laundry Systems LLC – DO NOT COPY or TRANSMIT

Notes

© Copyright, Alliance Laundry Systems LLC – DO NOT COPY or TRANSMIT

Parts Index

A

AC Drive Cover Assembly
F0636888-00 31
F200100201 ..... 23, 39
F200146800P 23, 39

AC Drive Radio Filter Assembly
F200320900 ..... 13, 19, 23, 25, 31, 33, 39, 41

AC Drive Resistor Assembly
F0637379-00P 35, 37
F0637379-01P 35, 37
F8079901P 13, 19, 23
F8080001P 13, 19, 23

AC Drive Side Panel Assembly
F200180200 71

Access Transformer Harness
F200008700 51

Air Filter Assembly
F8026401P 23, 39

Air Trap Hose
F020014200 89

B

Basket Assembly
F8407401 89

Basket Installation Tool Rod
401P4 103

Basket Puller Tool
F460129P 103

Basket Pulley
F150268 93

Basket Pulley Bushing
F280290 93

Basket Pulley Puller Tool
F8608502P 103

Bearing
F100155 93

Bearing Adapter Sleeve
F100307 93

Bearing Grease
F210206P 103

Belt
F200140300P 93

Bezel Gasket
F0170190-00P 81

Blind Rivet
J1111905 69

Bolt
F430974 73

Bolt Layout Mounting Template
F609692 103

Bridge Rectifier
F370310 17

Bushing
F603050 99

C

Cabinet Top Brace
F0636549-00 71

Cable Tie
F140605 93

Cap
F190303 83

Cap Plug
F180511 81

Capacitor
F370225P 29, 35
F8035701 51

Capacitor Mounting Bracket
F0320211-00 ..... 29, 35

Card Reader and Bracket Assembly
D510068P 53

Card Reader Assembly
F200019900 53
F200019901 53

Card Reader Harness
F141887 53
F141889 53

Clip
F601515 27

Coil
F8514601P 83, 99, 101
F8514701 ..... 83, 101

Coin Box
F160672 59
F160673P 59

Coin Box Assembly
F0637455-00 29

Coin Box Audit Harness
F200137700P 45

Coin Box Cover Assembly
F0637138-00 29

Coin Cover Overlay
70246301 61

Coin Drop
200731 49
38963P 47
70256402P 49
70441601P 47

Coin Drop Assembly
210195 49
210196 49
38462P 47
38463 47
38464P 47
38467 49
38472 49
38519 49
38521 49
39157 49
70281102 49
70283102 49
70441602 49

Coin Drop Kit
CK077 49

N/A items do not appear in index.

© Copyright, Alliance Laundry Systems LLC – DO NOT COPY or TRANSMIT

Coin Guide Assembly
F200002502P 55
F200002503 57
F200002504P 47
Coin Guide Kit
F200002505 49
Coin Identification Paper
38725 ..... 47, 51
Coin Meter
F0160737-00 49
Coin Meter Assembly
F200003800P 55
F200003801 55
F200003802P 55
F200003803 55
F200003805 55
F200003806P 55
F200003807 55
F200003808 55
F200003809 55
F200003810 55
F200003811 55
F200003812 55
F200005200 57
F200005201 57
F200005202 57
F200005203 57
F200005204 57
F200005205 57
F200005207 57
F200005208 57
F200005209 57
F200005210 57
F200005211 57
F200005212 57
F200010000P 47
F200010001 49
F200010002 49
F200010003 49
F200010004 49
F200010005P 49
F200010006 47
F200010007 47
F200010008 49
F200010009 47
F200010010 49
F200010011 47
F200010012 47
F200021600 51
Coin Meter Blocking Coil
F160466P 55, 57
F160467P 55, 57
Coin Meter Decal
F0231595-00 57
Coin Meter Insert
F608925 ..... 55, 57
Coin Meter Insert Decal
F231010 55
Coin Meter Mounting Assembly
F0636445-01 43
Coin Meter Mounting Kit
F0636445-00 43
Cold Water Valve Decal
F0231368-00 85
Communication Board
210095P 15
Communication Box Kit
F200040300P 45, 103
F200041700P 45, 103
F200041800P 45, 103
F200098500P 45, 103
F200098600P 45, 103
F200098700P 45, 103
Communication Connector
210099 15
Computer
F0370452-30P 45
F0370452-31P 45
F0370455-10P 45
F037046530P 45
F037046532P 45
F037047530P 45
Computer and Door Lock Harness
F200296000P 17, 21, 45
Conductor Decal
F231146 ..... 11, 85
Cone
399P4 103
Connector
J1408004 93
Contactor
F330163 97
F330175P 97
F330177P 95, 97
F330180P 97
F330182 ..... 95, 97
Control Box Assembly
F0637033-01 17
Control Cover
F0634903-00 43
Control Decal
F231524-1 65
F231524-2 65
Control Panel Assembly
F0636541-00 61
Control Panel Decal
F0231440-00 65
F0231589-51 61
F0231589-52 61
F0231589-53 61
F0231593-51 63
F0231606-51 61
F0231606-52 61
F0231606-53 61
F0231613-51 63
F0231616-51 63
F231471 67
F231494 67
F231524-3 65
F231549 67
Cooling Fan Filter Slide
F633321 ..... 19, 31
Counterclockwise Spin Rotation Decal
F230693 11

D

DIN Coil
F380986P 83, 101
DIN Valve Adapter Kit
F8382301 ..... 83, 99, 101

N/A items do not appear in index.

© Copyright, Alliance Laundry Systems LLC – DO NOT COPY or TRANSMIT

DIN Valve Kit
F8521501 99
F8521601 101
F8521801 ..... 83, 99, 101
Display Window Cover
F200181500 ..... 23, 39
Do Not Lift Decal
F230216 11
Do Not Open Warning Decal
F200284600 11
Door Assembly
F8505107 73
Door Bezel
F170419-2 69
F8659301 69
Door Gasket
F8440801P 73
Door Glass Gasket
F170115 73
Door Glass Retainer
F8504901 73
Door Handle
F150225 73
Door Handle Kit
F730155 73
Door Hinge
F190216P 73
Door Hinge Shim Kit
F200131000P 73
Door Lock Assembly
F0636698-01P 79
F0636698-03 79
F200136800P 75
F200136801 75
F200321402 77
F200321403 77
Door Lock Assembly Cover
F603003 ..... 75, 77, 79
Door Lock Catch Casting
F150261 ..... 75, 77, 79
Door Lock Control CCA
F370432P 13
Door Lock Kit
F0798839-00 75
F0798839-01 75
Door Lock Microswitch
F200203200 ..... 75, 77, 79
Door Lock Pin Linkage
F150455 ..... 75, 77, 79
Door Lock Pin Release Spring
F310137 ..... 75, 77, 79
Door Lock Plate Assembly
F8066701 ..... 75, 77, 79
Door Lock Plate Shim
F8059701 ..... 75, 77, 79
Door Lock Retainer Latch
F0636103-00 75
Door Lock Solenoid
F0300131-00P 75
Door Lock Splash Shield
F320200 ..... 75, 77, 79
Door Lock Spring
F310125 73
Door Lock Sub-Assembly
F063667701 77
Door Lock Switch Lever
F0636636-00 ..... 75, 77, 79
Door Lock Torsion Spring
F310110 ..... 75, 77, 79
Door Locking Linkage Pin
F431231 ..... 75, 77, 79
Door Mount
F150271 73
Door Release Solenoid
F300128P 75
Door Spacer
F0150273-00 73
Door Switch
F340200 ..... 77, 79
Door Warning Label
81968 11
Door Weldment
F608782-2 73
Double-Coated Tape
F410212 71
Drain Hose
F150400 91
Drain Tee
F8752101 91
Drain Valve Cover
F200133600 91
Drain Valve Kit
F8406302 91
F8602601 91
Drive Kit, 160-Series to PowerFlex 40
F8172805 ..... 33, 41
F8172806 25
F8172807 ..... 33, 41
F8172808 25
F8172903 ..... 33, 41
F8172904 25
Drive Motor Pulley
F280289P 93

E

Elbow
70079601 ..... 99, 101
Electronic Coin Drop Assembly
70294103P 51
70294104 51
70294107 51
70294111 51
70513306 51
Electronic Coin Drop Kit
CK099 51
CK100 51
CK101 51
CK103 51
CK109 51
CK110 51
CK113 51
CK115 51
CK501 51
Element
F360205P 95, 97

N/A items do not appear in index.

© Copyright, Alliance Laundry Systems LLC – DO NOT COPY or TRANSMIT

E-Ring Retainer
F310205 ..... 75, 77, 79
External Supply Connection Decal
F231376-5 81
F231376-6 81
External Supply Fuse Decal
F231271 81

F

Fan Guard
F0220922-00 ..... 23, 31, 39
Female Pin Terminal
00430 ..... 55, 57
Fiberglass Blanket
F410301 ..... 95, 97, 99, 101
Fill Hose
F200116 87
Filter
F0270321-00P 19, 23, 31, 39
F270305 87
F270306P 87
Filter Handle Decal
F231377 ..... 19, 31, 39
Filter Housing Cap Gasket
F270407 87
Flange Relay
F330227 ..... 17, 27
F330230 ..... 21, 27, 29, 35, 37
Flow Restrictor
F380119 83
Frame Assembly
F633673 71
Front Bearing Kit
F745015-1 93
Front Cabinet Brace
F634804 69
Front Panel
F634688-2 69
F634688-5 69
F634818-5P 69
F8200701P 69
F8200702P 69
Fuse
F350108 ..... 17, 21, 45
F350109 ..... 17, 21, 45
F350110 ..... 13, 17, 19, 21, 45
F350115 ..... 13, 81
F350142 13
F350145 13
F350146 13
M413867 19
Fuse Decal
F231393 19
F231394 19
Fuse Holder
F0350312-10 ..... 13, 19, 81
Fuse Holder Bracket
F633512 81
Fuse Terminal Mounting Bracket
F633322 19

G

Glass
F290210P 73
Grease Fitting
F190701 93
Grease Gun
F210207P 103
Grease Gun Kit
F798700 103
Grease Manifold
F320326 93
Grommet
F170607 15
F200139500 81
Ground Decal
F230630 ..... 11, 85
F230739 ..... 11, 85
Ground Terminal Lug
F140734 81

H

Harness
F631973-2 53
Heating Element Plug
F360202 ..... 97, 101
HIM Drive
F370851P 103
Hose Barb
F421930 83
Hose Clamp
F200201 ..... 85, 91
F200213 ..... 85, 89, 91
36801 ..... 81, 83, 89
Hot Water Valve Decal
F0231367-00 85

I

Injection Nozzle
F8322001 81
Injection Nozzle Kit
F730168 81
Input Block
F0140798-00P 29, 35, 37
Input Power Block
F140747 ..... 29, 35, 81
F140748 81
Input Power Connection Box Cover
F602533 81
Insulator Bushing
F140909 13
Interface CCA
F200017400P 45
F200209200 45
Inverter Drive
F370843 ..... 13, 19, 23, 31, 39
F370844 ..... 13, 19, 31, 39

N/A items do not appear in index.

© Copyright, Alliance Laundry Systems LLC – DO NOT COPY or TRANSMIT

K

Key
F160420 59
F160421 59
F160423 59
F608824-1 93
70155603 71

Keypad
F0231582-01P 43
F0231582-03P 43
F0231582-05P 43
F0231582-06P 43
F0231582-07P 43
F0231582-08P 43
F0231582-16P 43
F0231582-17P 43
F0231582-19 43
F023158231P 43
F023158232P 43
F370576P 27
F8132501P 43

L

L-Catch Kit
F746808 ..... 75, 77, 79

Left Side Panel
F0636547-00 71
F0636548-00 71

Lid Clamp Assembly
F630430 71

Lid Lock Pin
F0190808-00P 71

Light
F350411 27
F350413 27

Line Reactor Kit
F0360160-00P 13, 19, 23, 31, 39
F0360167-00P 13, 19, 31, 39

Liquid Supply Decal
F230877 11

Locknut Spanner Wrench
F703654 103

Logic Control Assembly
F160203P 15

Lubrication Instruction Decal
F231078 93

M

Magnet
F8390801 73

Magnetic Switch
F0340723-00 69

Magnetic Switch Assembly
F200321300 69

Main Harness
F200205802 37

Male Connector
F140571 ..... 55, 57

Membrane Switch
F340605P 27
F340608P 27
F340614P 27
F340615P 27
F340616P 27

Microcomputer
F370313-13P 27
F370313-50P 27

Module Box Assembly
F200100102 ..... 21, 37
F200100103 ..... 21, 35

Module Box Cover
F0637178-00 17

Module Box Tray
F0636185-01 29

Momentary Switch
F200120100 63
F340412 ..... 63, 67

Motor
F220236P 93

Motor Pulley Bushing
F280211P 93

Mounting Bracket Assembly
F0636707-00 ..... 43, 47
F635319 ..... 43, 49, 51
F635320 ..... 43, 53

Muffin Fan
F110105 ..... 23, 31, 39
F110106 19
F110110 ..... 13, 23, 31, 39

N

Network Board Assembly
210016P 15

Network Board Harness
F141886 15

Network Interface Control Mounting Bracket
F634769 15

Network Interface Harness
F141888-2 15

Nipple
F420709 ..... 99, 101
F420710 ..... 99, 101
F420718 ..... 99, 101
F421969 83

Nut
F430201 ..... 89, 93
F430215 ..... 13, 71, 73, 77, 79, 89, 91, 99, 101
F430218 89
F430225 ..... 75, 77, 79
F430231 ..... 13, 23, 27, 29, 31, 35, 39, 43, 77, 79, 85, 97
F430232 ..... 15, 17, 27, 29, 31, 35, 37, 39, 73, 75, 77, 79
F430239 93
F430243 ..... 55, 57
F430264 ..... 69, 75, 77, 79
F431016 ..... 13, 19, 23, 35, 37
F431017 ..... 15, 43, 53, 75, 77, 79, 89
F431022 ..... 13, 19, 21, 45, 73, 81
F431024 71
F431041 73
F431806 ..... 29, 35, 37

N/A items do not appear in index.

© Copyright, Alliance Laundry Systems LLC – DO NOT COPY or TRANSMIT

F8549401 73
20274 ..... 71, 93
685846 ..... 43, 47, 49, 51
802292 83

O

On/Off Switch Assembly
F0636445-02 43
Optic Switch Kit
F775801-03P 55, 57
Opto Coupler
200674P 47, 49
O-Ring
801632 81
Output Board Cover
F0170427-00 ..... 29, 35, 37
Output Board VCMP Assembly
F8206501P 17
F8206502P 21
Output CCA
F037044860-1 ..... 17, 21, 45
Output Relay CCA
F370433P 13
Overflow Hose
F150401 91
Overlay
F231402 67
F231404 67
70295101 51
70295301 51
Overlay Decal
F200116200 61
F200116201 61

P

Personal Injury Warning Decal
F231065 11
Plug
F200202600 ..... 99, 101
F420409 ..... 99, 101
F421507 ..... 95, 97
Pop Rivet
F431215 ..... 29, 35, 47, 49, 55, 57
Power Distribution Block
M413865 81
PowerFlex 40 Drive
F8169416 ..... 25, 33, 41
F8169417 ..... 25, 33, 41
F8169418 ..... 25, 33, 41
Pulse Expander Assembly
F8034701P 51
Push Red Button Decal
F230661 ..... 11, 73
Pushbutton Rod
F320300 73

R

Ratchet Fastener
F0432316-00 ..... 21, 29, 35, 37
Rear Bearing Kit
F745016-1 93
Rear Drain Hose
F0150399-00 91
Rear Fill Hose
F150492 85
Rear Panel
F603976 71
Red Dot Decal
F230662 73
Reducer Bushing
F421936 ..... 95, 97, 101
Relay
M412534 13
Remove Door Lock Tag
F230528 11
Replacement Filter
F270405 87
F270406 87
Ribbon Cable
F140215 27
F140216P 17
F140219P 43
Right Side Panel
F0636546-00 71
Rivet
F432005 15
Rocker Switch
F340411 ..... 27, 63
Rod
F602813-3 73

S

Screw
F0430165-00 ..... 21, 29, 35, 37
F0430268-00 81
F430103 91
F430107 89
F430108 ..... 71, 99, 101
F430115 ..... 99, 101
F430144 89
F430174 ..... 23, 31, 39, 69, 71, 81
F430177 85
F430185 93
F430532 73
F430536 73
F430903 ..... 15, 29, 35, 37, 81
F430909 ..... 13, 19, 23, 35, 37
F430916 ..... 13, 17, 23, 31, 39, 73, 81
F430917 97
F430922 ..... 23, 39
F430925 ..... 71, 93
F430928 ..... 13, 19, 21, 43, 45
F430929 81
F430938 ..... 29, 35
F430947 ..... 89, 93
F430956 ..... 69, 75, 77, 79, 81
F430977 ..... 75, 77, 79

N/A items do not appear in index.

© Copyright, Alliance Laundry Systems LLC – DO NOT COPY or TRANSMIT

F430982 ..... 75, 77, 79
F430993 93
F430996 13
F431702 ..... 29, 35, 37
F8535601 ..... 31, 39, 73
800461 71

Shaft Seal Sleeve
F8312007P 89

Shell Band Fastener Kit
F791001 89

Shell Band Kit
F8537808 89

Shell Front Assembly
F603988P 89

Shell Front Gasket Kit
F792000 89

Shell Weldment
F0636525-00 89
F0637017-00 ..... 89, 95, 99

Side Panel Assembly
F200218100 71

Signal Light
F350404 29

Siphon Tube
F150390 81

Snap Bushing
F140938 81

Solenoid
F300124P 77, 79
F300125P 79

Spacer
F431901 ..... 75, 77, 79

Spring Pin
F431222 73

Standoff
F180501 ..... 13, 17, 19, 21, 29, 35, 37
F180506 ..... 13, 15, 81

Steam Bracket Assembly
F601186 ..... 99, 101

Steam Filter
F270307 ..... 99, 101

Steam Hose
F200153P 99, 101

Steam Injection Tube
F603048 99

Steam Injector Tube Assembly
F8368201 ..... 99, 101

Steam Valve Repair Kit
F380984P 99, 101

Street Elbow
H86070034 ..... 99, 101

Supply Dispenser Assembly
F200202201P 81

Supply Dispenser Bezel
F0150503-00 81

Supply Dispenser Hose
F8061601 89

Supply Dispenser Lid
F200270500 71

Supply Dispenser Standoff
F0150504-00 81

Supply Dispenser Sub-Assembly
F602374 81

Support
F603947 71

Switch
F340901 71

Switch Extension
F340913 71

Switch Mounting Plate Sub-Assembly
F633540 27

Switch Panel Decal
F231381 27
F231449 27

T

Tee
F422806 ..... 95, 97, 99

Temperature Probe
F370606P 97, 101

Temperature Probe Assembly
F8045001 95

Terminal
F140766 81
F140768 19

Thermistor Sensor
F370609 97

Thermostat
F0290116-00 ..... 13, 19, 21, 45
F290115 ..... 13, 19

Time Delay Assembly
F200296100P 29, 35

Timer
F0330404-00P 21, 29, 35, 37

Top Cover Assembly
F0636545-00P 71

Top Cover Stiffener
F603980 71

Transformer
C000203 89
F0360170-00P 13
F360156P 89
803527P 51

Transformer Mounting Plate
F632745 89

Trim
F8679201P 69

Triple Lip Seal
F8203804 93

Tubing
C000628P 93
F0140941-00 ..... 29, 35
F422404P 95, 97, 99

V

Vacuum Breaker Assembly
F603031 85

Vacuum Breaker Bottom
F015033000 85

Vacuum Breaker Top
F0150329-00 85

Valve
F8322801P 99, 101

N/A items do not appear in index.

© Copyright, Alliance Laundry Systems LLC – DO NOT COPY or TRANSMIT

F8322802 101
F8322803P 83
F8322807P 83
F8322909P 83

Valve Coil
F8514801 83

Valve Kit
F8379501P 99, 101

Valve Panel Assembly
F0636543-00 ..... 71, 81
F0636543-01 81

Valve Rebuild Kit
F8379504 83

Valve Transition Kit
F8379503P 83

Valve, 2-Way
F0381751-00P 83
F381721P 83
F381722P 83

Velcro
F140639 ..... 19, 31, 39

W

Warning Label
D500316 ..... 11, 39

Washer
F430300 93
F430311 15
F430317 ..... 71, 91, 101
F430322 81
F430339 93
F431100 ..... 73, 75, 77, 79
F431113 ..... 13, 19, 21, 45, 73, 81
F431123 ..... 75, 77, 79
F431133 31
F431137 13
F431147 ..... 71, 75, 79
F431902 ..... 75, 77, 79
F431916 73
F8195301 ..... 35, 37
M400014 93
M400081 ..... 71, 89, 93
20290 ..... 83, 87
803615 87
901690 ..... 17, 89, 93

Water Connection Inlet Manifold
F150246 83
F150247 83

Water Hose
F200108P 81
F200164 87
F200165 87
F200166 87

Water Level Switch
F0340351-10P 13, 17, 21, 43, 97

Water Level Switch Bracket
F631920 ..... 13, 17

Water Pressure Switch
F8223001P 17, 21, 43, 95, 97, 99

Y

Y Connector
F422808 85

N/A items do not appear in index.

© Copyright, Alliance Laundry Systems LLC – DO NOT COPY or TRANSMIT