Washer-Extractor

Cabinet Hardmount

Design 1

Refer to Page 3 for Model Numbers

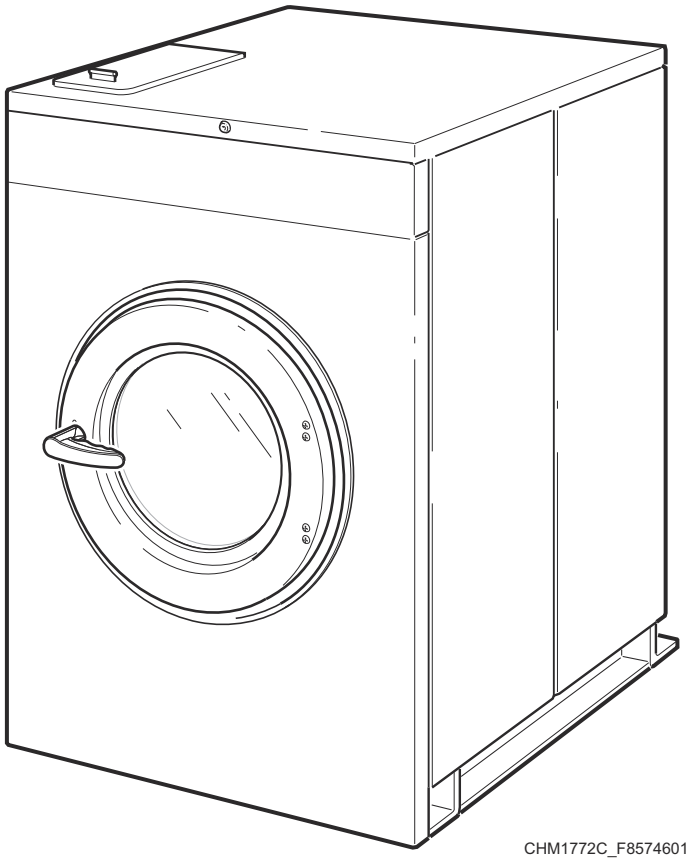

CHM1772C_F8574601

Parts

Alliance™ Laundry Systems

www.alliancelaundry.com

Part No. F8574601R7
August 2024

Table of Contents

Title	Page
Parts Ordering Information	2
Serial Plate Location	2
Model Identification	3
Product Overview - M9, M30, Galaxy 400, Galaxy 600, Quantum Silver and Quantum Gold OPL	4
Product Overview for M4, Galaxy 200 and Quantum Standard	6
Decals	8
Control Module - 2 Speed OPL Models	10
Control Module - F and V-Speed OPL Models	12
Control Module - 2 Speed Vend Models	14
Control Module - F and V-Speed Vend Models	16
Flush Mount Coin Meter Assembly - Single Drop	18
Flush Mount Coin Meter Assembly - Dual Drop	20
Electronic Coin Meter Assembly	22
Optional Coin Box	24
Card Reader	26
Front Panel, Control Panel and Overlays - Coin Models	28
Front Panel and Control Panel - Card Ready and OPL Models	30
Panels	32
Door	34
Door Lock	36
Basket	38
Trunnion	40
Shell and Frame	42
Drain Plumbing	44
Drain Valve Assembly - 20 and 30 Pound Models	46
Drain Valve Assembly - 40 and 60 Pound Models	48
Steam Filter (Optional) and Water Supply Hose	50
Fill Plumbing Assembly (Drawing 1 of 2)	52
Fill Plumbing Assembly (Drawing 2 of 2)	54
Pulley and Belt	56
Motor Pulley and Support	58
Motor - 20 and 30 Pound Models	60
Motor - 40 and 60 Pound Models	62
Electric Heat Option	64
Steam Heat Option	66
Parts Index	69

© Copyright 2024, Alliance Laundry Systems LLC

All rights reserved. No part of the contents of this book may be reproduced or transmitted in any form or by any means without the expressed written consent of the publisher.

Parts Ordering Information

If literature or replacement parts are required, contact the source from whom the machine was purchased or contact Alliance Laundry Systems at (920) 748-3121 for the name and address of the nearest authorized parts distributor.

For technical assistance, call the number listed below:

(920) 748-3121 Ripon, Wisconsin

Serial Plate Location

When calling or writing about your product, be sure to mention model and serial numbers. Model and serial numbers are located on serial plate(s) as shown.

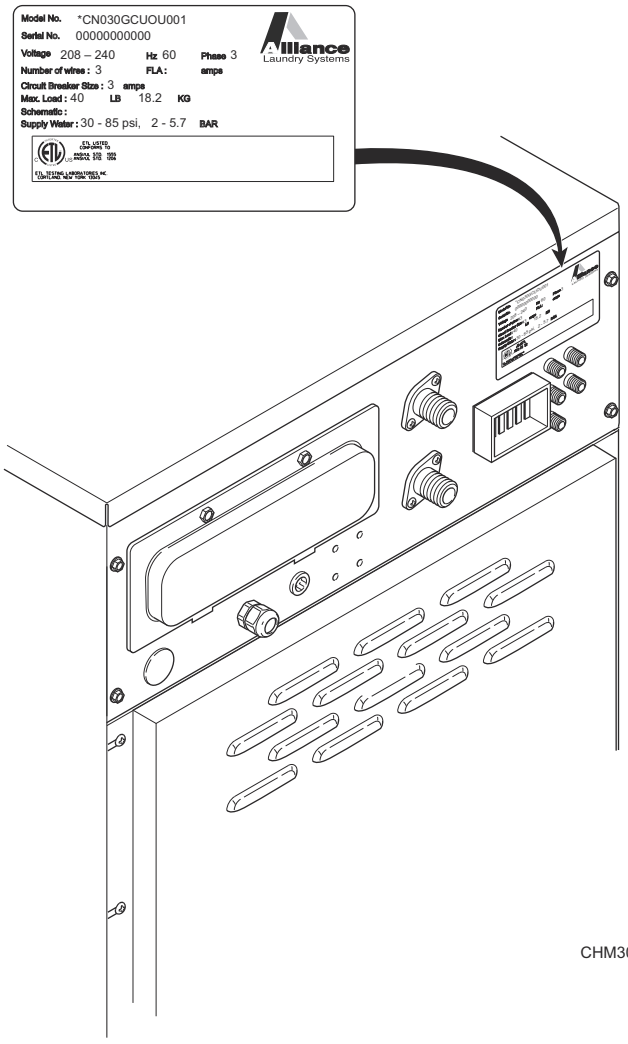

CHM3025P_F8574601

© Copyright, Alliance Laundry Systems LLC – DO NOT COPY or TRANSMIT

Model Identification

Information in this manual is applicable to these washer-extractor models:

HCL020KD2
HCL020KDF
HCL020KDV
HCL020KEV
HCL030KCV
HCL030KD2
HCL030KDF
HCL030KDV
HCL030KEF
HCL030KEV
HCL040KCV
HCL040KD2
HCL040KDF
HCL040KDV
HCL040KEV
HCL060KD2
HCL060KDF
HCL060KDV
HCL060KEV
HCN020KC2
HCN020KCF
HCN020KCV
HCN020KD2
HCN020KDF
HCN020KDV
HCN020KEF
HCN020KEV
HCN020KX2
HCN020KXF
HCN020KY2
HCN020KYF
HCN020KYV

HCN030KC2
HCN030KCF
HCN030KCV
HCN030KD2
HCN030KDF
HCN030KDV
HCN030KE2
HCN030KEF
HCN030KEV
HCN030KXF
HCN030KY2
HCN030KYF
HCN030KYV
HCN040KC2
HCN040KCF
HCN040KCV
HCN040KD2
HCN040KDF
HCN040KDV
HCN040KEF
HCN040KEV
HCN040KXF
HCN040KY2
HCN040KYF
HCN040KYV
HCN060KC2
HCN060KCF
HCN060KCV
HCN060KD2
HCN060KDF
HCN060KDV
HCN060KE2
HCN060KEF
HCN060KEV
HCN060KXF
HCN060KY2
HCN060KYF
HCN060KYV

HCU020KCF
HCU020KCV
HCU020KE2
HCU020KEV
HCU020KL2
HCU020KLF
HCU020KLV
HCU020KXV
HCU020KY2
HCU020KYF
HCU020KYV
HCU030KCF
HCU030KCV
HCU030KE2
HCU030KEV
HCU030KLV
HCU030KY2
HCU030KYF
HCU030KYV
HCU040KCF
HCU040KCV
HCU040KE2
HCU040KEV
HCU040KLV
HCU040KXF
HCU040KXV
HCU040KY2
HCU040KYF
HCU040KYV
HCU060KCF
HCU060KCV
HCU060KEV
HCU060KLV
HCU060KY2
HCU060KYF
HCU060KYV

SCL020KNV
SCL030KN2
SCL030KNF
SCL030KNV
SCL040KN2
SCL040KNF
SCL040KNV
SCL060KN2
SCL060KNF
SCL060KNV
SCN020KN2
SCN020KNF
SCN020KNV
SCN030KN2
SCN030KNF
SCN030KNV
SCN040KN2
SCN040KNF
SCN040KNV
SCN060KN2
SCN060KNF
SCN060KNV
SCU020KN2
SCU020KNF
SCU030KN2
SCU030KNF
SCU030KNV
SCU040KN2
SCU040KNF
SCU040KNV
SCU060KN2
SCU060KNF
SCU060KNV
SCZ020KN2

UCL020KN2
UCL020KNF
UCL020KNV
UCL030KN2
UCL030KNF
UCL030KNV
UCL040KN2
UCL040KNF
UCL040KNV
UCL060KN2
UCL060KNF
UCL060KNV
UCN020KN2
UCN020KNF
UCN020KNV
UCN030KN2
UCN030KNF
UCN030KNV
UCN040KN2
UCN040KNF
UCN040KNV
UCN060KN2
UCN060KNF
UCN060KNV
UCU020KN2
UCU020KNF
UCU020KNV
UCU030KN2
UCU030KNF
UCU030KNV
UCU040KN2
UCU040KNF
UCU040KNV
UCU060KN2
UCU060KNF
UCU060KNV

© Copyright, Alliance Laundry Systems LLC – DO NOT COPY or TRANSMIT

Product Overview - M9, M30, Galaxy 400, Galaxy 600, Quantum Silver and Quantum Gold OPL

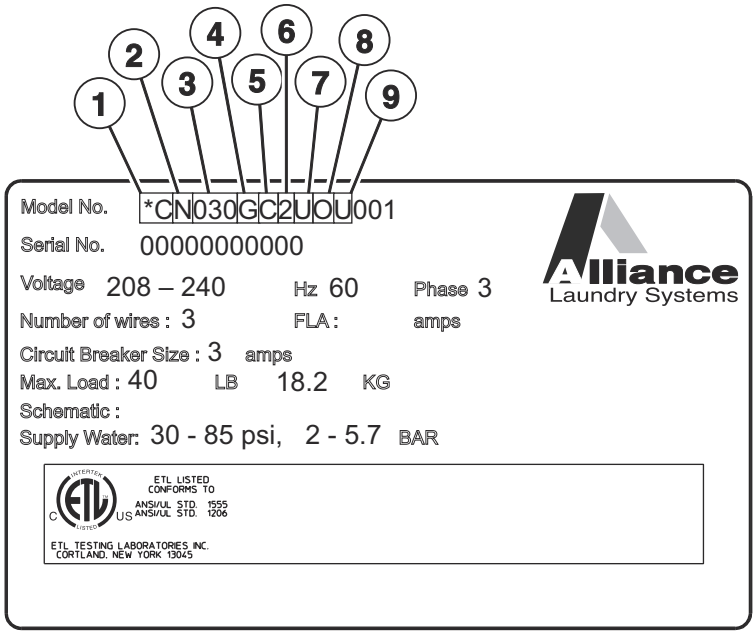

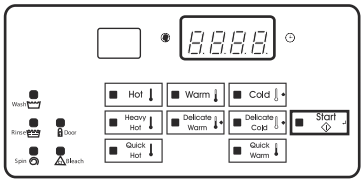

Galaxy 400 Coin

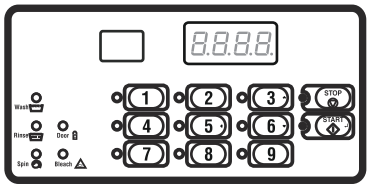

M9/Galaxy 400 OPL/Quantum Silver OPL

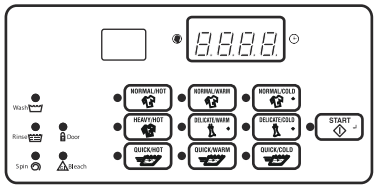

Quantum Silver Coin (Domestic)

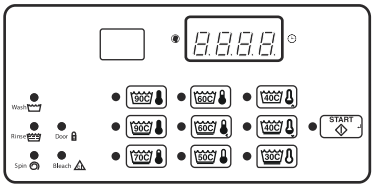

Quantum Silver Coin (International)

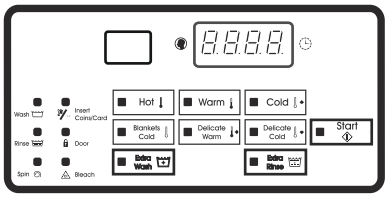

Galaxy 600 Coin (Domestic)

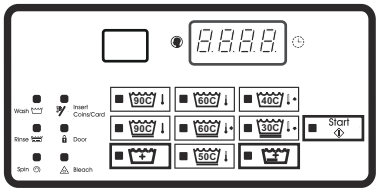

Galaxy 600 Coin (International)

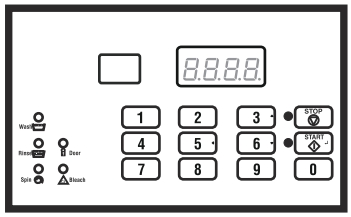

M30/Quantum Gold OPL

CHM3026P_F8574601

© Copyright, Alliance Laundry Systems LLC – DO NOT COPY or TRANSMIT

Product Overview - M9, M30, Galaxy 400, Galaxy 600, Quantum Silver and Quantum Gold OPL

REF	PART NO.	DESCRIPTION	COMMENTS
1	-	Product Family	CC HC IC NC SC UC
2	-	Market	B (Brazil CE) D (Daiwa) L (International ETL(c)) N (Domestic ETL(c)) U (International CE) Y (Australia) Z (No Agency International)
3	-	Capacity (Pounds)	020 030 040 060 080 100 125
4	-	Control	G J L H K W
5	-	Actuation	C (Drop Coin Meter) D (Digital Coin Meter) E (Electronic World Drop) L (Prep for Remote/Central Pay) N (Non-Coin OPL) X (Prep for Coin Meter) Y (Prep for Card Reader)
6	-	Speed	2 (2 Speed) F (F-Speed) V (V-Speed)
7	-	Voltage	B (120/60/1/2) C (380-415/50/3/4) F (440-480/60/3/3) J (200/50/3/3) N (440-480/50/60/3) O (208/220-240/60/3/3) P (380-415/50/60/3) Q (200-208/220-240/50/60/3) R (380-415/440-480/50/60/3) X (200-208/220-240/50/60/1/3) Y (208/220-240/60/1/2)
8	-	Side Panel	U (Standard) 1 (Stainless Steel)
9	-	Design	1 2 3

© Copyright, Alliance Laundry Systems LLC – DO NOT COPY or TRANSMIT

Product Overview for M4, Galaxy 200 and Quantum Standard

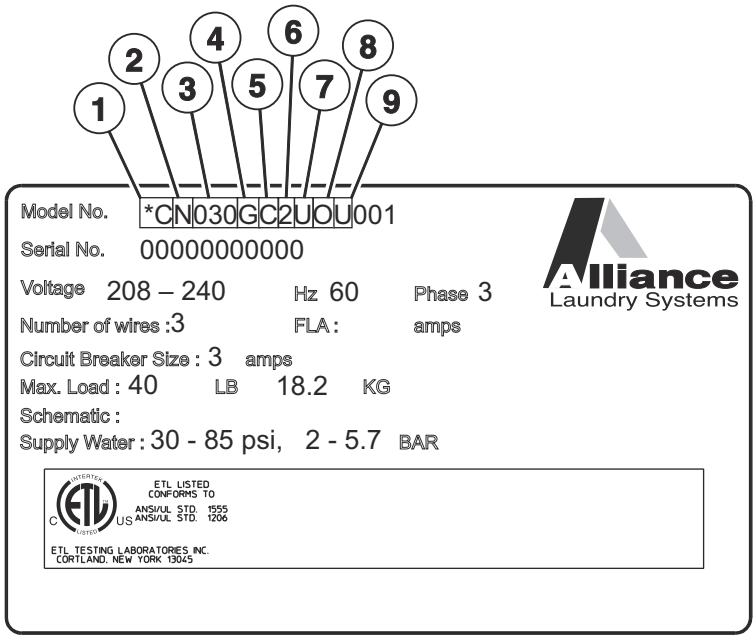

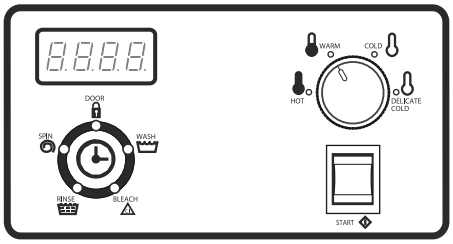

M4/Galaxy 200/Quantum Standard

CHM3218P_F8574601

© Copyright, Alliance Laundry Systems LLC – DO NOT COPY or TRANSMIT

Product Overview for M4, Galaxy 200 and Quantum Standard

REF	PART NO.	DESCRIPTION	COMMENTS
1	-	Product Family	CC HC IC NC SC UC
2	-	Market	B (Brazil CE) D (Daiwa) L (International ETL(c)) N (Domestic ETL(c)) U (International CE) Y (Australia) Z (No Agency International)
3	-	Capacity (Pounds)	020 030 040 060 080 100 125
4	-	Control	G J L H K W
5	-	Actuation	C (Drop Coin Meter) D (Digital Coin Meter) E (Electronic World Drop) L (Prep for Remote/Central Pay) N (Non-Coin OPL) X (Prep for Coin Meter) Y (Prep for Card Reader)
6	-	Speed	2 (2 Speed) F (F-Speed) V (V-Speed)
7	-	Voltage	B (120/60/1/2) C (380-415/50/3/4) F (440-480/60/3/3) J (200/50/3/3) N (440-480/50/60/3) O (208/220-240/60/3/3) P (380-415/50/60/3) Q (200-208/220-240/50/60/3) R (380-415/440-480/50/60/3) X (200-208/220-240/50/60/1/3) Y (208/220-240/60/1/2)
8	-	Side Panel	U (Standard) 1 (Stainless Steel)
9	-	Design	1 2 3

© Copyright, Alliance Laundry Systems LLC – DO NOT COPY or TRANSMIT

Decals

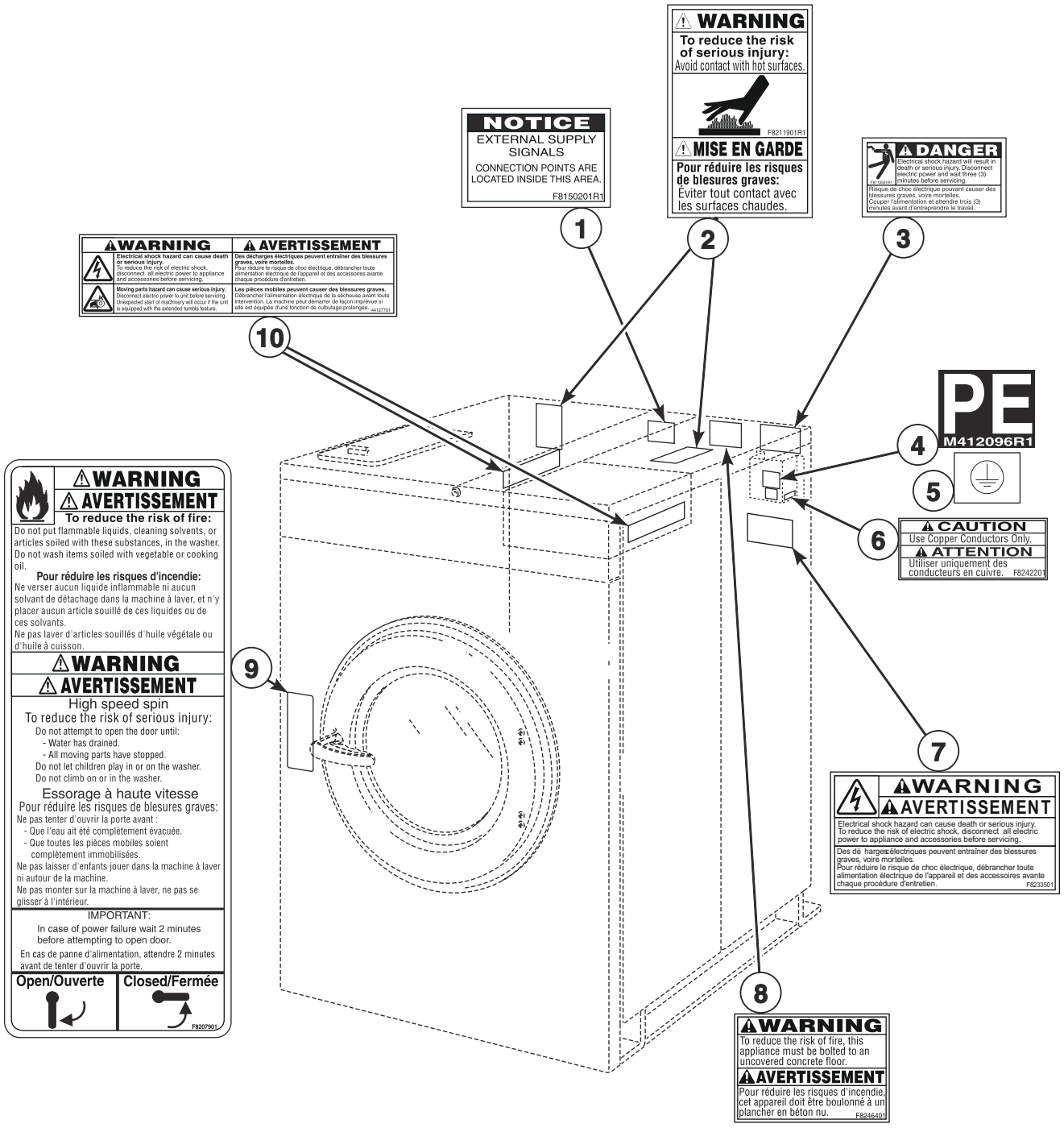

CHM3027P_F8574601

© Copyright, Alliance Laundry Systems LLC – DO NOT COPY or TRANSMIT

Decals

REF	PART NO.	DESCRIPTION	COMMENTS
1	F8150201	External Supply Connection Decal	
2	F8614301	Hot Surface Warning Label	
3	F8115501	Electric Shock Danger Label	
4	M412096	Earth Terminal Sticker	
5	F230739	Ground Decal	
6	F8242201	Use Copper Conductors Only Caution Label	
7	F8233501	Warning Label	
8	F8246401	Mount on Concrete Warning Label	
9	F8207901	Warning Label	
10	44324001	Warning Label	

© Copyright, Alliance Laundry Systems LLC – DO NOT COPY or TRANSMIT

Control Module - 2 Speed OPL Models

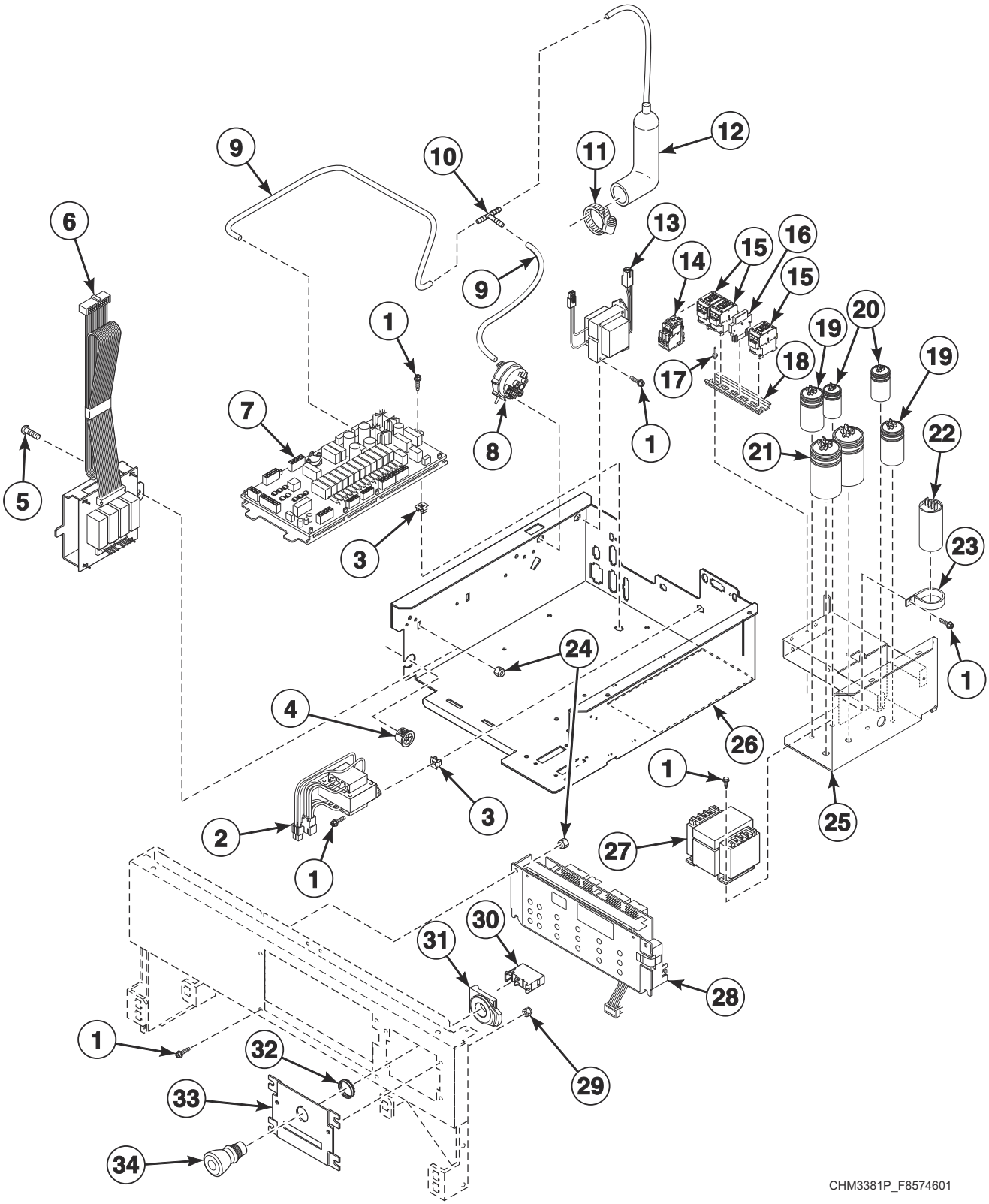

© Copyright, Alliance Laundry Systems LLC – DO NOT COPY or TRANSMIT

Control Module - 2 Speed OPL Models

REF	PART NO.	DESCRIPTION	COMMENTS
	F8028701	Output/Logic Harness	
	F8060501	Emergency Stop Harness	
	F8028101P	Machine Size Configuration Harness	20 pound models
	F8028103P	Machine Size Configuration Harness	30 pound models
	F8028104P	Machine Size Configuration Harness	40 pound models
	F8028105P	Machine Size Configuration Harness	60 pound models
	203346	USB IR Interface Kit	
	F8191201P	External Supply Harness	
	F937P3	External Supply Kit	Includes items 1, 6, 13, F8191201P External Supply Harness and screws
	M413506	Jumper Harness Assembly	208 Volt
	M413507	Jumper Configuration Assembly	240 Volt
1	F8206901	Screw	
2	803527P	Transformer	
3	70030501	Expansion Clip	
4	44071501	Snap Bushing	
5	F430903	Screw	
6	F8189401P	Auxiliary Control Assembly	
7	F980P3	Output Control Assembly Kit	Includes item 10 and F8108001 Output Assembly
	802493	Fuse	2.5 Amp
8	F8223001P	Water Pressure Switch	
9	F8153901	Tubing	
10	F8246601	Tee	Electric and steam heat
	F8431001	Hose Barb Connector	All other models
11	F200222	Hose Clamp	No. 12
12	F020014200	Air Trap Hose	
13	201616P	Transformer	External supply
14	F8176101P	Overload Contactor	
15	F330177P	Contactor	
16	F330186P	Interlock Contactor	
17	70058501	Pop Rivet	
18	F8200101	DIN Rail	
19	F8411901	Capacitor	50 MFD; 20 pound models Y-voltage, 1 used; 40 pound models Y-voltage, 2 used
	F370221	Capacitor	100 MFD; 20 pound models; B-voltage, 1 used
20	F8411701	Capacitor	20 MFD; 30 pound models Y-voltage, 4 used; 40 pound models Y-voltage, 2 used
	F8411801	Capacitor	25 MFD; 20 pound models; Y-voltage, 2 used
21	F370218P	Capacitor	160 MFD; 40 pound models; Y-voltage, 2 used
	F370220	Capacitor	130 MFD; 20 pound models B-voltage, 2 used; 30 pound models Y-voltage, 1 used
22	F340002	Motor Switch	50 Amp
23	F0340722-00	Switch Clamp	
24	F430232	Nut	
25	F8199601	Capacitor Tray Assembly	20 pound models; B and Y-voltage
	F8199901	Capacitor Tray Assembly	All other models; B and Y-voltage
	F8343401	Contactor Tray Assembly	C, F, J and O-voltage
26	F8205901	Control Tray Assembly	
27	F360157P	Transformer	
28	F983P3	Control Kit	Includes F8028701 Output/Logic Harness
29	F431017	Nut	
30	F8069502	Contact	
31	F200233401P	Contact Block Switch	Includes item 30 and F8538101 Contact Base
	F8538101	Contact Base	
32	24205	Nut	
33	F8201301	Emergency Stop Plate	
34	F200233500	Emergency Stop Pushbutton	

© Copyright, Alliance Laundry Systems LLC – DO NOT COPY or TRANSMIT

Control Module - F and V-Speed OPL Models

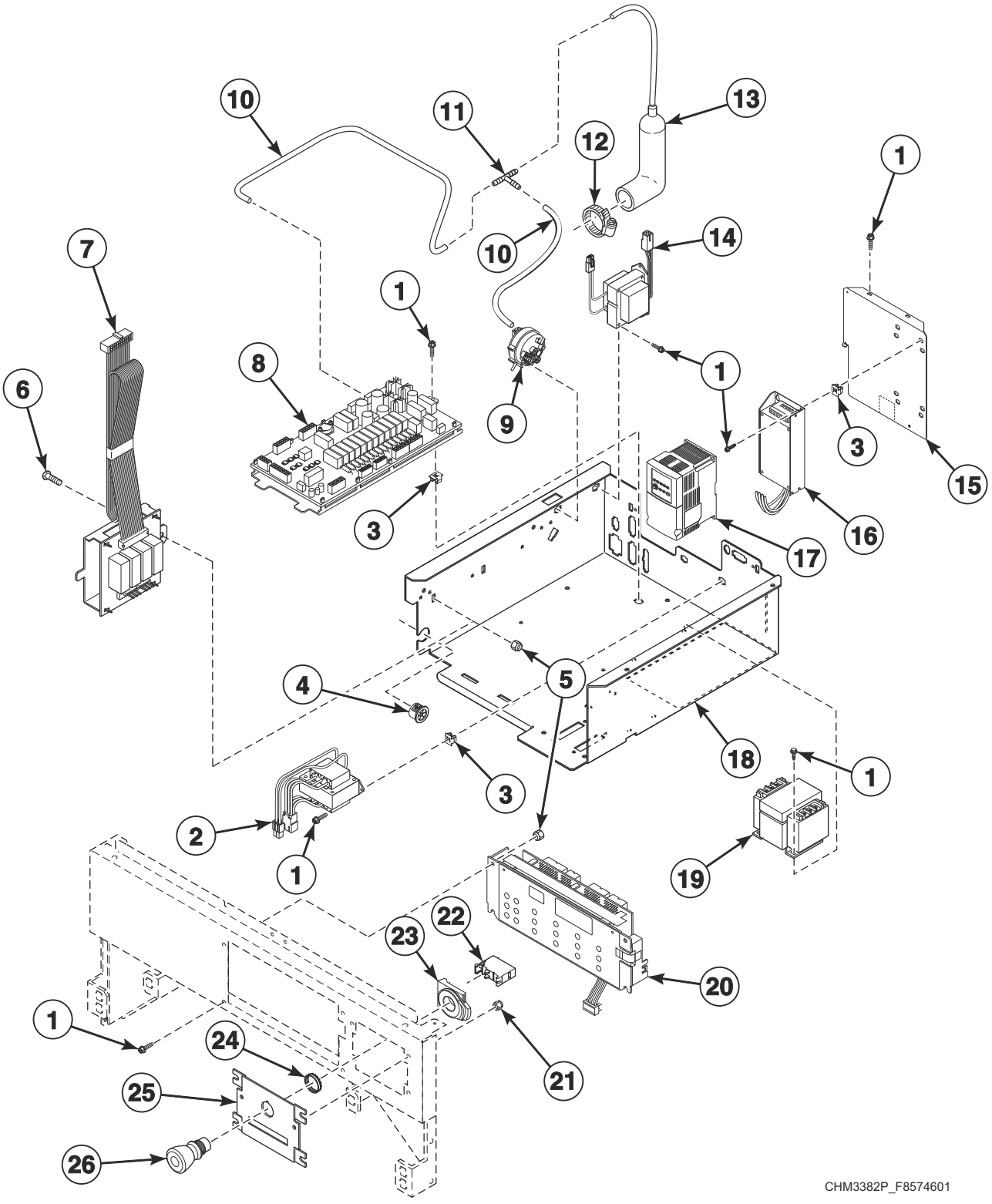

© Copyright, Alliance Laundry Systems LLC – DO NOT COPY or TRANSMIT

Control Module - F and V-Speed OPL Models

REF	PART NO.	DESCRIPTION	COMMENTS
	F8028701	Output/Logic Harness	
	F8060501	Emergency Stop Harness	
	F8261501P	Control Tray Harness	
	F8028101P	Machine Size Configuration Harness	20 pound models
	F8028103P	Machine Size Configuration Harness	30 pound models
	F8028104P	Machine Size Configuration Harness	40 pound models
	F8028105P	Machine Size Configuration Harness	60 pound models
	F8028219P	Temperature Configuration Harness	
	203346	USB IR Interface Kit	
	F8191201P	External Supply Harness	
	F937P3	External Supply Kit	Includes items 1, 8, F8191201P External Supply Harness and screws
	M413506	Jumper Harness Assembly	208 Volt
	M413507	Jumper Configuration Assembly	240 Volt
1	F8206901	Screw	
2	803527P	Transformer	
3	70030501	Expansion Clip	
4	44071501	Snap Bushing	
5	F430232	Nut	
6	F430903	Screw	
7	F8189401P	Auxiliary Control Assembly	
8	F980P3	Output Control Assembly Kit	Includes item 11 and F8108001 Output Assembly
	802493	Fuse	2.5 Amp
9	F8223001P	Water Pressure Switch	
10	F8153901	Tubing	
11	F8246601	Tee	
12	F200222	Hose Clamp	No. 12
13	F020014200	Air Trap Hose	
14	201616P	Transformer	External supply
15	F8195803	Support Bracket	
16	F8053901P	EMI Filter	240 Volt; International models only
	F8053902	EMI Filter	480 Volt; International models only
17	F8169401	PowerFlex 40 Drive	20 pound models; Models through 2/28/10; Q and X-voltage
	F8169402	PowerFlex 40 Drive	20 pound models; Models through 2/28/10; N, P and R-voltage
	F8169403	PowerFlex 40 Drive	30 pound models; Models through 2/28/10; Q and X-voltage
	F8169404	PowerFlex 40 Drive	30 pound models; Models through 2/28/10; N, P and R-voltage
	F8169405	PowerFlex 40 Drive	40 pound models; Models through 3/8/10; Q and X-voltage
	F8169406	PowerFlex 40 Drive	40 pound models; Models through 3/8/10; N, P and R-voltage
	F8169407	PowerFlex 40 Drive	60 pound models; Models through 3/8/10; Q and X-voltage
	F8169408	PowerFlex 40 Drive	60 pound models; Models through 3/8/10; N, P and R-voltage
	F8169434	PowerFlex 40 Drive	20 pound models; Models starting 3/1/10; Q and X-voltage
	F8169435	PowerFlex 40 Drive	20 pound models; Models starting 3/1/10; N, P and R-voltage
	F8169436	PowerFlex 40 Drive	30 pound models; Models starting 3/1/10; Q and X-voltage
	F8169437	PowerFlex 40 Drive	30 pound models; Models starting 3/1/10; N, P and R-voltage
	F8169438	PowerFlex 40 Drive	40 pound models; Models starting 3/9/10; Q and X-voltage
	F8169439	PowerFlex 40 Drive	40 pound models; Models starting 3/9/10; N, P and R-voltage
	F8169440	PowerFlex 40 Drive	60 pound models; Models starting 3/9/10; Q and X-voltage
	F8169441	PowerFlex 40 Drive	60 pound models; Models starting 3/9/10; N, P and R-voltage
18	F8205902	Control Tray Assembly	20 and 30 pound models
	F8205903	Control Tray Assembly	40 and 60 pound models
19	F360157P	Transformer	B-voltage
20	F983P3	Control Kit	F-speed models; Includes F8028701 Output/Logic Harness
	F988P3	Front End Control Kit	V-speed models; Includes F8028701 Output/Logic Harness
21	F431017	Nut	
22	F8069502	Contact	
23	F200233401P	Contact Block Switch	Includes item 22 and F8538101 Contact Base
	F8538101	Contact Base	
24	24205	Nut	
25	F8201301	Emergency Stop Plate	
26	F200233500	Emergency Stop Pushbutton	

© Copyright, Alliance Laundry Systems LLC – DO NOT COPY or TRANSMIT

Control Module - 2 Speed Vend Models

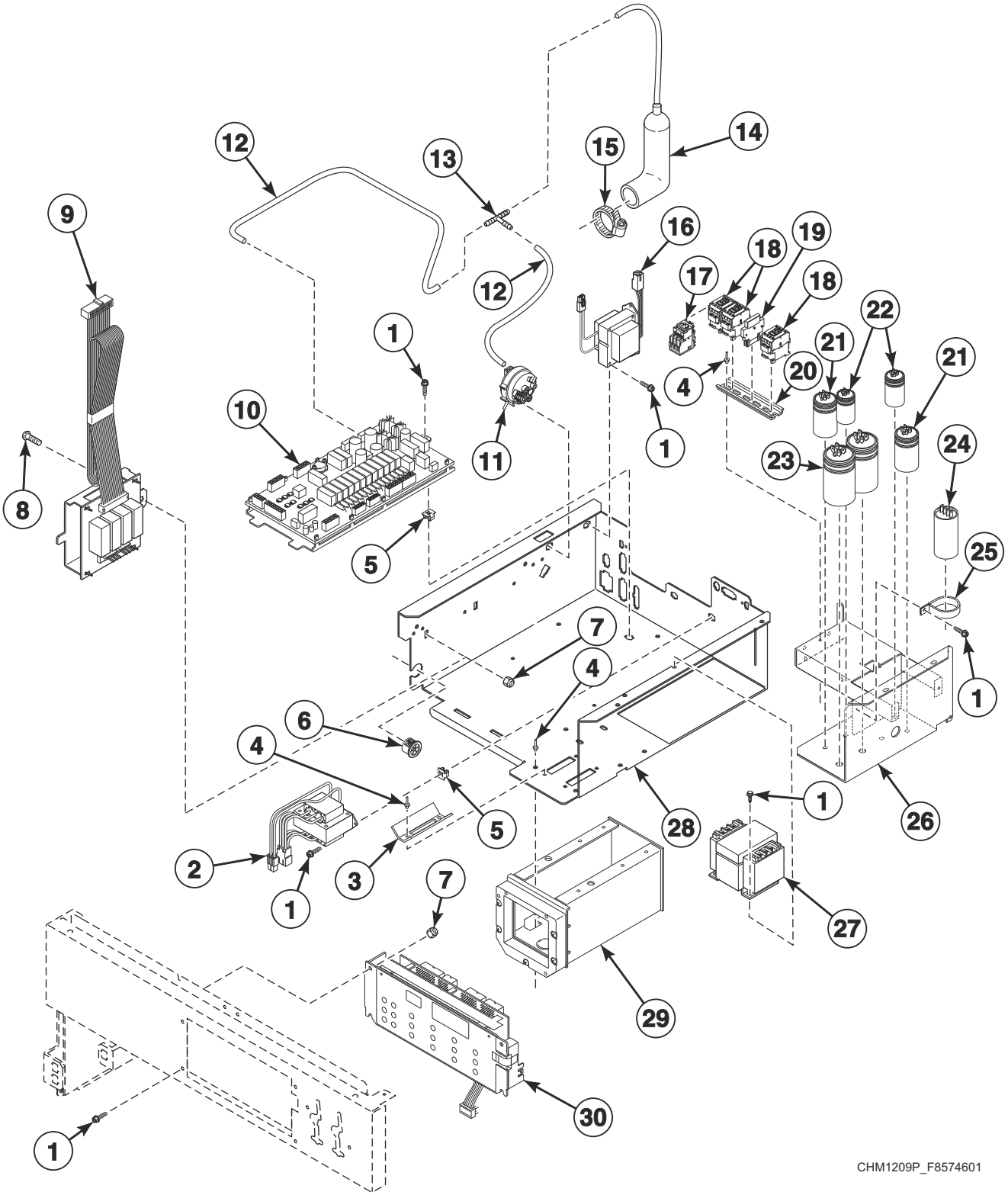

© Copyright, Alliance Laundry Systems LLC – DO NOT COPY or TRANSMIT

Control Module - 2 Speed Vend Models

REF	PART NO.	DESCRIPTION	COMMENTS
	F8028701	Output/Logic Harness	
	F8028101P	Machine Size Configuration Harness	20 pound models
	F8028103P	Machine Size Configuration Harness	30 pound models
	F8028104P	Machine Size Configuration Harness	40 pound models
	F8028105P	Machine Size Configuration Harness	60 pound models
	F8028219P	Temperature Configuration Harness	
	F8191203P	External Supply Harness	20 and 30 pound models
	F8191201P	External Supply Harness	40 and 60 pound models
	F937P3	External Supply Kit	Includes items 1, 2, 9, F8191201 External Supply Harness and Screws
	203346	USB IR Interface Kit	
	M413506	Jumper Harness Assembly	208 Volt
	M413507	Jumper Configuration Assembly	240 Volt
1	F8206901	Screw	
2	803527P	Transformer	
3	F8170801	Coin Chute	
4	70058501	Pop Rivet	
5	70030501	Expansion Clip	
6	44071501	Snap Bushing	
7	F430232	Nut	
8	F430903	Screw	
9	F8189401P	Auxiliary Control Assembly	
10	F980P3	Output Control Assembly Kit	Includes item 11 and F8108001 Output Assembly
	802493	Fuse	2.5 Amp
11	F8223001P	Water Pressure Switch	
12	F8153901	Tubing	
13	F8246601	Tee	Electric and steam heat
	F8431001	Hose Barb Connector	All other models
14	F020014200	Air Trap Hose	
15	F200222	Hose Clamp	No. 12
16	201616P	Transformer	External Supply
17	F8176101P	Overload Contactor	
18	F330177P	Contactor	
19	F330186P	Interlock Contactor	
20	F8200101	DIN Rail	
21	F8411901	Capacitor	50 MFD; 20 pound models Y-voltage, 1 used; 40 pound models Y-voltage, 2 used
	F370221	Capacitor	100 MFD; 20 pound models; B-voltage, 1 used
22	F8411701	Capacitor	20 MFD; 30 pound models Y-voltage, 4 used; 40 pound models Y-voltage, 2 used
	F8411801	Capacitor	25 MFD; 20 pound models; Y-voltage, 2 used
23	F370218P	Capacitor	160 MFD; 40 pound models; Y-voltage, 2 used
	F370220	Capacitor	130 MFD; 20 pound models B-voltage, 2 used; 30 pound models Y-voltage, 1 used
24	F340002	Motor Switch	50 Amp
25	F0340722-00	Switch Clamp	
26	F8199601	Capacitor Tray Assembly	20 pound models; B and Y-voltage
	F8199901	Capacitor Tray Assembly	All other models; B and Y-voltage
	F8343401	Contactor Tray Assembly	C, F, J and O-voltage
27	F360157P	Transformer	
28	F8205902	Control Tray Assembly	20 and 30 pound models; Includes items 3 and 25
	F8205903	Control Tray Assembly	40 and 60 pound models; Includes items 3 and 25
29	F8182501	Coin Vault Assembly	20 and 30 pound models
	F8182601	Coin Vault Assembly	40 and 60 pound models
30	F987P3	Control Kit	HCL and HCU models; Includes F8028101P Machine Size Configuration Harness
	F990P3	Control Kit	HCN models; Includes F8028101P Machine Size Configuration Harness

© Copyright, Alliance Laundry Systems LLC – DO NOT COPY or TRANSMIT

Control Module - F and V-Speed Vend Models

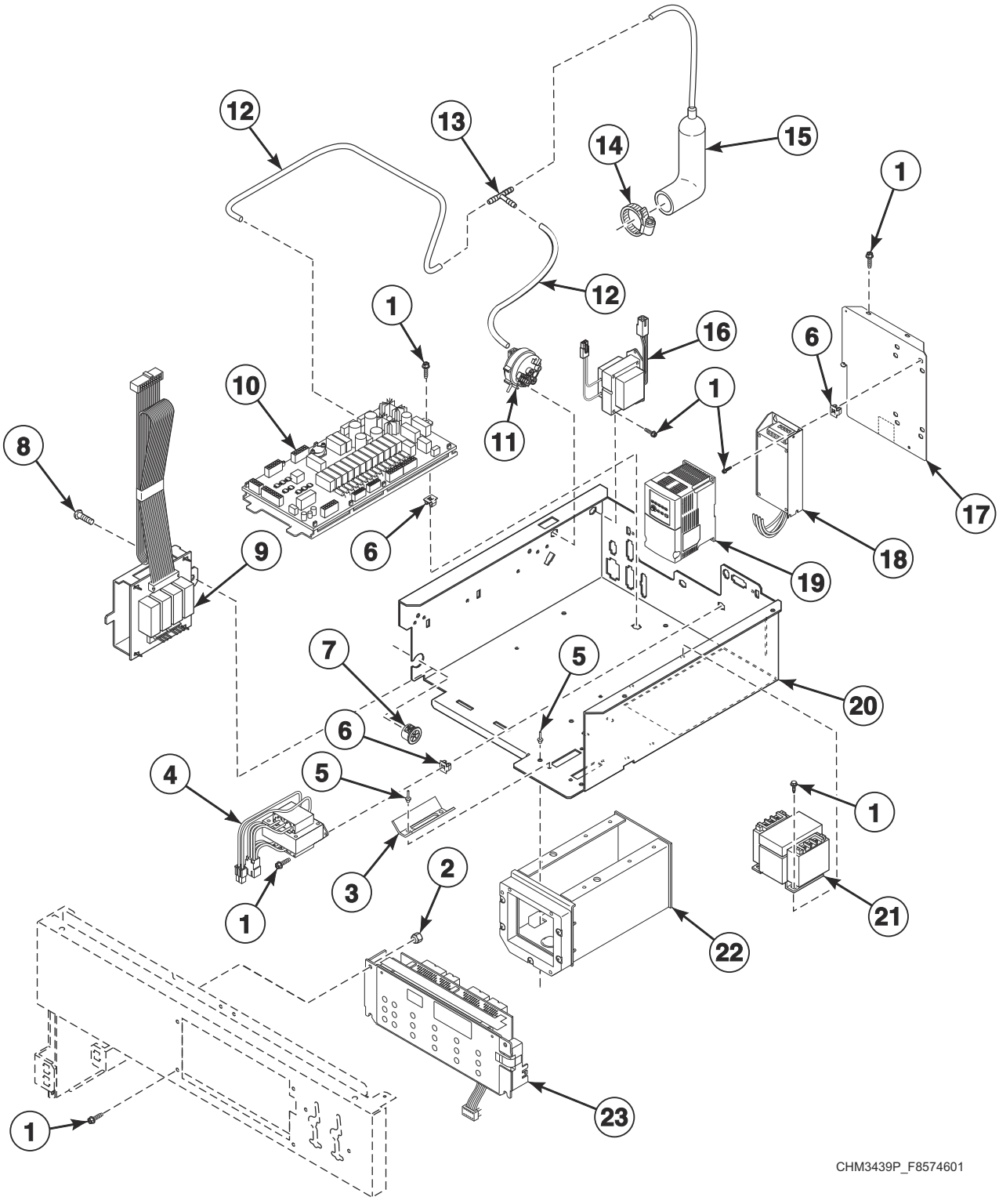

© Copyright, Alliance Laundry Systems LLC – DO NOT COPY or TRANSMIT

Control Module - F and V-Speed Vend Models

REF	PART NO.	DESCRIPTION	COMMENTS
	F8028701	Output/Logic Harness	
	F8261501P	Control Tray Harness	40 and 60 pound models
	F8028101P	Machine Size Configuration Harness	20 pound models
	F8028103P	Machine Size Configuration Harness	30 pound models
	F8028104P	Machine Size Configuration Harness	40 pound models
	F8028105P	Machine Size Configuration Harness	60 pound models
	F8028219P	Temperature Configuration Harness	
	F8191203P	External Supply Harness	20 and 30 pound models
	F8191201P	External Supply Harness	40 and 60 pound models
	F937P3	External Supply Kit	Includes items 1, 2, 9, F8191201 External Supply Harness and Screws
	203346	USB IR Interface Kit	
	M413506	Jumper Harness Assembly	208 Volt
	M413507	Jumper Configuration Assembly	240 Volt
1	F8206901	Screw	
2	F430232	Nut	
3	F8170801	Coin Chute	
4	803527P	Transformer	
5	70058501	Pop Rivet	
6	70030501	Expansion Clip	
7	44071501	Snap Bushing	
8	F430903	Screw	
9	F8189401P	Auxiliary Control Assembly	
10	F980P3	Output Control Assembly Kit	Includes item 11 and F8108001 Output Assembly
	802493	Fuse	2.5 Amp
11	F8223001P	Water Pressure Switch	
12	F8153901	Tubing	
13	F8246601	Tee	Electric and steam heat
	F8431001	Hose Barb Connector	All other models
14	F200222	Hose Clamp	No. 12
15	F020014200	Air Trap Hose	
16	201616P	Transformer	External Supply
17	F8195803	Support Bracket	
18	F8053901P	EMI Filter	200 Volt
	F8053902	EMI Filter	400 Volt
19	F8169401	PowerFlex 40 Drive	20 pound models; Models through 2/28/10; Q and X-voltage
	F8169402	PowerFlex 40 Drive	20 pound models; Models through 2/28/10; N, P and R-voltage
	F8169403	PowerFlex 40 Drive	30 pound models; Models through 2/28/10; Q and X-voltage
	F8169404	PowerFlex 40 Drive	30 pound models; Models through 2/28/10; N, P and R-voltage
	F8169405	PowerFlex 40 Drive	40 pound models; Models through 3/8/10; Q and X-voltage
	F8169406	PowerFlex 40 Drive	40 pound models; Models through 3/8/10; N, P and R-voltage
	F8169407	PowerFlex 40 Drive	60 pound models; Models through 3/8/10; Q and X-voltage
	F8169408	PowerFlex 40 Drive	60 pound models; Models through 3/8/10; N, P and R-voltage
	F8169434	PowerFlex 40 Drive	20 pound models; Models starting 3/1/10; Q and X-voltage
	F8169435	PowerFlex 40 Drive	20 pound models; Models starting 3/1/10; N, P and R-voltage
	F8169436	PowerFlex 40 Drive	30 pound models; Models starting 3/1/10; Q and X-voltage
	F8169437	PowerFlex 40 Drive	30 pound models; Models starting 3/1/10; N, P and R-voltage
	F8169438	PowerFlex 40 Drive	40 pound models; Models starting 3/9/10; Q and X-voltage
	F8169439	PowerFlex 40 Drive	40 pound models; Models starting 3/9/10; N, P and R-voltage
	F8169440	PowerFlex 40 Drive	60 pound models; Models starting 3/9/10; Q and X-voltage
	F8169441	PowerFlex 40 Drive	60 pound models; Models starting 3/9/10; N, P and R-voltage
20	F8205902	Control Tray Assembly	20 and 30 pound models; Includes items 5 and 19
	F8205903	Control Tray Assembly	40 and 60 pound models; Includes items 5 and 19
21	F360157P	Transformer	B-voltage
22	F8182501	Coin Vault Assembly	20 and 30 pound models
	F8182601	Coin Vault Assembly	40 and 60 pound models
23	F990P3	Control Kit	HCN F-speed models; Includes F8028701 Output/Logic Harness
	F991P3	Control Kit	HCL and HCU F-speed models; Includes F8028701 Output/Logic Harness
	F986P3	Front End Control Kit	HCN V-speed models; Includes F8028701 Output/Logic Harness
	F987P3	Control Kit	HCL and HCU V-speed models; Includes F8028701 Output/Logic Harness

© Copyright, Alliance Laundry Systems LLC – DO NOT COPY or TRANSMIT

Flush Mount Coin Meter Assembly - Single Drop

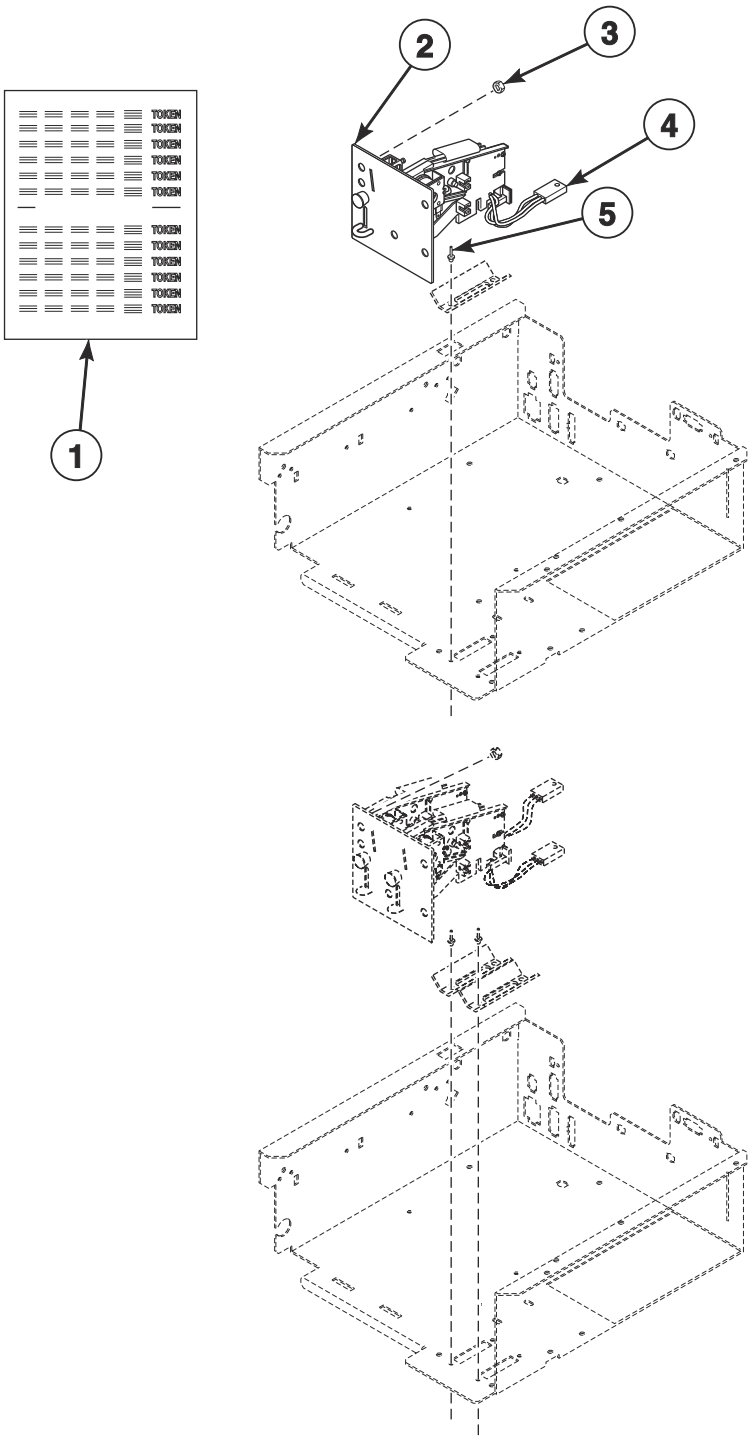

CHM3088P_F8574601

© Copyright, Alliance Laundry Systems LLC – DO NOT COPY or TRANSMIT

Flush Mount Coin Meter Assembly - Single Drop

REF	PART NO.	DESCRIPTION	COMMENTS
	F200010000P	Coin Meter Assembly	U.S. $.25; Includes items 2 and 3
	F200010006	Coin Meter Assembly	.800 token; Includes items 2 and 3
	F200010007	Coin Meter Assembly	.880 token; Includes items 2 and 3
	F200010009	Coin Meter Assembly	.990 token; Includes items 2 and 3
	F200010011	Coin Meter Assembly	Jeton WH121 token; Includes items 2 and 3
	F200010012	Coin Meter Assembly	Jeton .08 token; Includes items 2 and 3
1	38725	Coin Identification Paper	
2	38464P	Coin Drop Assembly	Canada .25
	N/A	Coin Drop Assembly	Australia .20
	N/A	Coin Drop Assembly	Belgium 5 franc
	N/A	Coin Drop Assembly	Denmark 2 krone
	N/A	Coin Drop Assembly	United Kingdom 20 pence
	N/A	Coin Drop Assembly	France 2 franc
	N/A	Coin Drop Assembly	Hong Kong 5 dollar
	N/A	Coin Drop Assembly	Italy 500 lirraiget
	N/A	Coin Drop Assembly	Japan 100 yen
	N/A	Coin Drop Assembly	Korea 500 won
	N/A	Coin Drop Assembly	South Africa 2 rand
	N/A	Coin Drop Assembly	Spain 100 peseta
	N/A	Coin Drop Assembly	Thailand 10 baht
	N/A	Coin Drop Assembly	.886 token
	N/A	Coin Drop Assembly	1.000 token
	N/A	Coin Drop Assembly	Jeton 08 token
	70441601P	Coin Drop	U.S. $.25
	N/A	Coin Drop Assembly	.800 token
	38462P	Coin Drop Assembly	Token; 118-1; .880 diameter x .079 thick; Brass
	38463	Coin Drop Assembly	Token; 118-5; .990 diameter x .081 thick; Silver
	N/A	Coin Drop Assembly	Jeton WH121 token
	N/A	Coin Meter	Jeton .08 token
3	685846	Nut	
4	200674P	Opto Coupler	
5	70058501	Pop Rivet	

N/A = Part no longer available

© Copyright, Alliance Laundry Systems LLC – DO NOT COPY or TRANSMIT

Flush Mount Coin Meter Assembly - Dual Drop

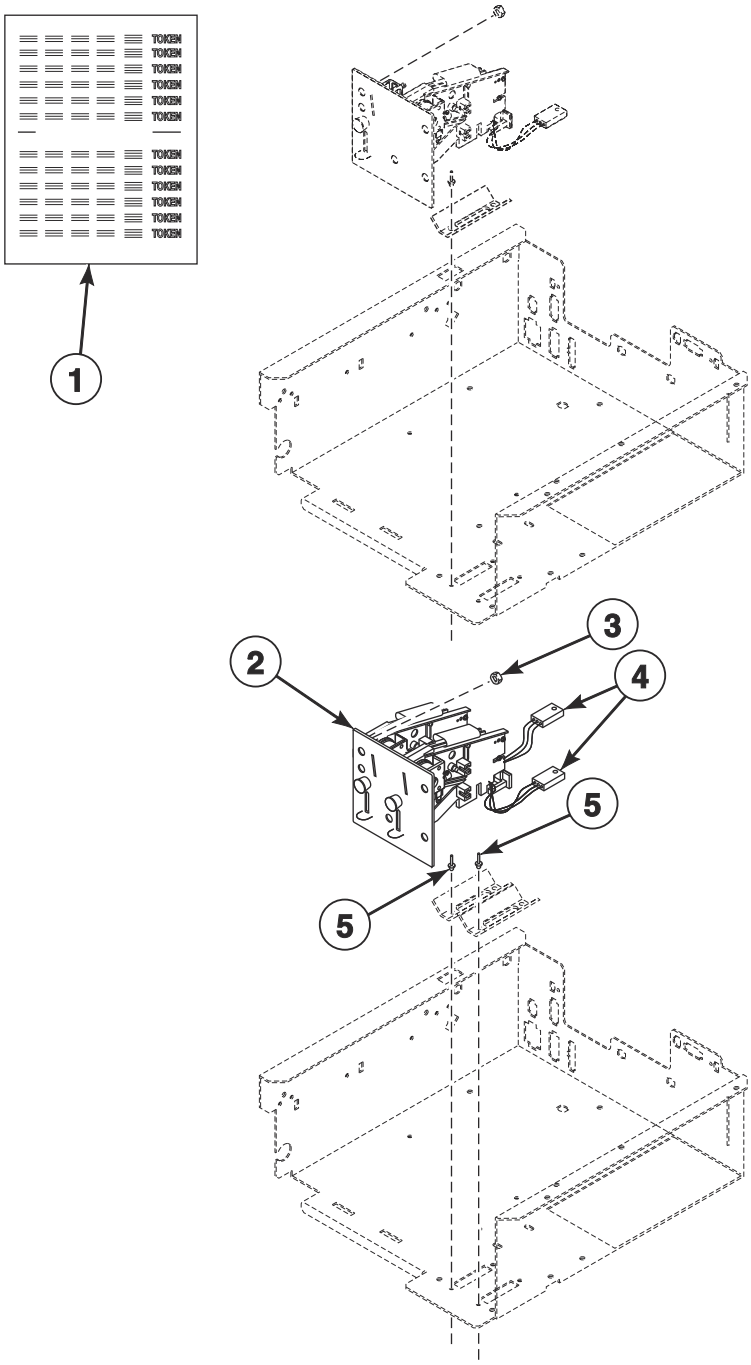

CHM3088PA_F8574601

© Copyright, Alliance Laundry Systems LLC – DO NOT COPY or TRANSMIT

Flush Mount Coin Meter Assembly - Dual Drop

REF	PART NO.	DESCRIPTION	COMMENTS
	F200010001	Coin Meter Assembly	Australia .20 and 1.00; Includes items 2 and 3
	F200010002	Coin Meter Assembly	100 and 500 yen; Includes items 2 and 3
	F200010003	Coin Meter Assembly	Canada .25 and 1.00; Includes items 2 and 3
	F200010004	Coin Meter Assembly	New Zealand .20 and 1.00; Includes items 2 and 3
	F200010005P	Coin Meter Assembly	U.S. $.25 and $1.00; Includes items 2 and 3
	F200010008	Coin Meter Assembly	.50 and 2.00 euro; Includes items 2 and 3
	F200010010	Coin Meter Assembly	10 and 50 Taiwan; Includes items 2 and 3
1	38725	Coin Identification Paper	
2	N/A	Coin Meter	10 and 50 Taiwan
	N/A	Coin Meter	Belgium 5 and 20 franc
	N/A	Coin Meter	Denmark 1 and 5 krone
	N/A	Coin Meter	Denmark 5 and 10 krone
	38472	Coin Drop Assembly	United Kingdom 20 pence and 1 pound
	N/A	Coin Meter	.20 and .50 euro
	210195	Coin Drop Assembly	.20 and 1.00 euro
	210196	Coin Drop Assembly	.50 and 1.00 euro
	N/A	Coin Meter	2 and 5 franc
	N/A	Coin Meter	2 and 10 franc
	39157	Coin Drop Assembly	Israel 1 and 5 shekel
	38521	Coin Drop Assembly	Korea 100 and 500 won
	N/A	Coin Meter	Spain 100 and 500 peseta
	N/A	Coin Drop Assembly	Australia .20 and 1.00
	N/A	Coin Drop Assembly	Japan 100 and 500 yen
	N/A	Coin Drop Assembly	Canada .25 and 1.00
	N/A	Coin Drop Assembly	New Zealand .20 and 1.00
	70256402P	Coin Drop	U.S. $.25 and $1.00
	F0160737-00	Coin Meter	.50 and 2.00 euro
	70281102	Coin Drop Assembly	Taiwan 10 and 50 dollar
	N/A	Coin Meter	Taiwan 5 and 10 dollar
3	685846	Nut	
4	200674P	Opto Coupler	
5	70058501	Pop Rivet	

N/A = Part no longer available

© Copyright, Alliance Laundry Systems LLC – DO NOT COPY or TRANSMIT

Electronic Coin Meter Assembly

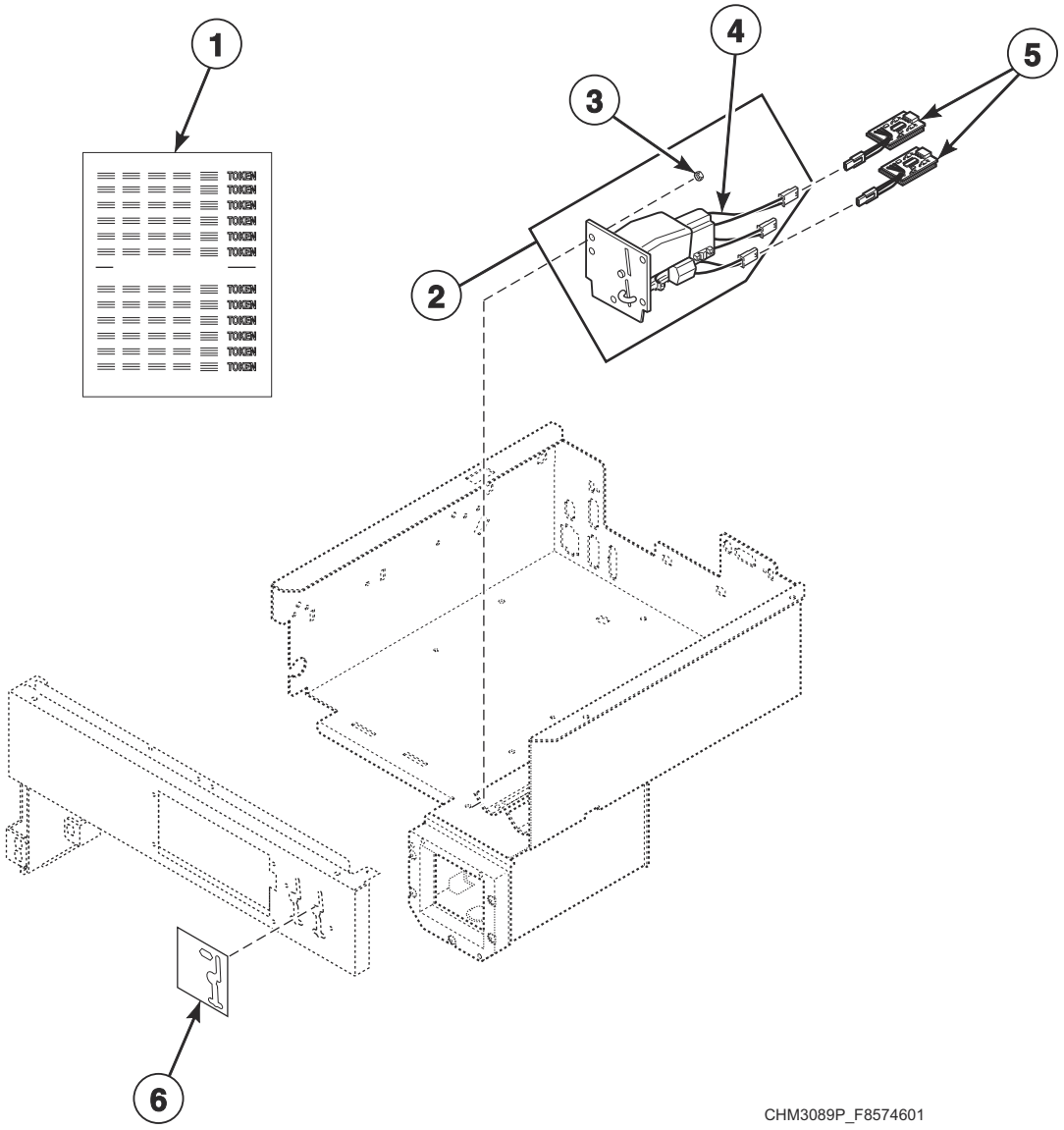

© Copyright, Alliance Laundry Systems LLC – DO NOT COPY or TRANSMIT

Electronic Coin Meter Assembly

REF	PART NO.	DESCRIPTION	COMMENTS
	CK500	Electronic Coin Drop Kit	Includes item 2
1	38725	Coin Identification Paper	
2	F200021600P	Coin Meter Assembly	U.S., Canada, Japan and Taiwan; Includes items 3 and 4; Requires CK500 Electronic Coin Drop Kit for installation
3	685846	Nut	
4	70513311	Electronic Coin Drop Assembly	China, Russia and Malaysia; Includes items 3 and 4; Requires CK500 Electronic Coin Drop Kit for installation
	CK115	Electronic Coin Drop Kit	U.S. and Canada; Includes item 1; Requires CK500 Electronic Coin Drop Kit for installation
	CK113	Electronic Coin Drop Kit	Japan and Taiwan; Includes item 1; Requires CK500 Electronic Coin Drop Kit for installation
	CK099	Electronic Coin Drop Kit	Australia, Hong Kong, South Korea and Malaysia; Includes item 1; Requires CK500 Electronic Coin Drop Kit for installation
	70294103P	Electronic Coin Drop Assembly	United Kingdom and euro
	CK100	Electronic Coin Drop Kit	United Kingdom and euro; Includes item 1; Requires CK500 Electronic Coin Drop Kit for installation
	70294104	Electronic Coin Drop Assembly	Denmark, Norway and Euro
	CK101	Electronic Coin Drop Kit	Denmark, Norway and euro; Includes item 1; Requires CK500 Electronic Coin Drop Kit for installation
	70513306	Electronic Coin Drop Assembly	U.S., Mexico and Ecuador
	CK110	Electronic Coin Drop Kit	U.S., Mexico and Ecuador; Includes item 1; Requires CK500 Electronic Coin Drop Kit for installation
	70294107	Electronic Coin Drop Assembly	Euro, Latvia and Lithuania
	CK103	Electronic Coin Drop Kit	Euro, Latvia and Lithuania; Includes item 1; Requires CK500 Electronic Coin Drop Kit for installation
	70294109	Electronic Coin Drop Assembly	China, Russia and Malaysia
	CK106	Electronic Coin Drop Kit	China, Russia and Malaysia; Includes item 1; Requires CK500 Electronic Coin Drop Kit for installation
	70294111	Electronic Coin Drop Assembly	Euro
	CK109	Electronic Coin Drop Kit	Euro; Includes item 1; Requires CK500 Electronic Coin Drop Kit for installation
	70294119	Electronic Coin Drop Assembly	Thailand
	CK119	Electronic Coin Drop Kit	Thailand; Includes item 1; Requires CK500 Electronic Coin Drop Kit for installation
	70294120	Electronic Coin Drop Assembly	Chile
	CK120	Electronic Coin Drop Kit	Chile; Includes item 1; Requires CK500 Electronic Coin Drop Kit for installation
	70294121	Electronic Coin Drop Assembly	Singapore
	CK121	Electronic Coin Drop Kit	Singapore; Includes item 1; Requires CK500 Electronic Coin Drop Kit for installation
	70482401	Coin Drop Assembly	New Zealand
	CK122	Coin Drop Kit	New Zealand; Includes item 1; Requires CK500 Electronic Coin Drop Kit for installation
5	F8034701P	Pulse Expander Assembly	
6	70295301	Overlay	Gray
	70295101	Overlay	Black

© Copyright, Alliance Laundry Systems LLC – DO NOT COPY or TRANSMIT

Optional Coin Box

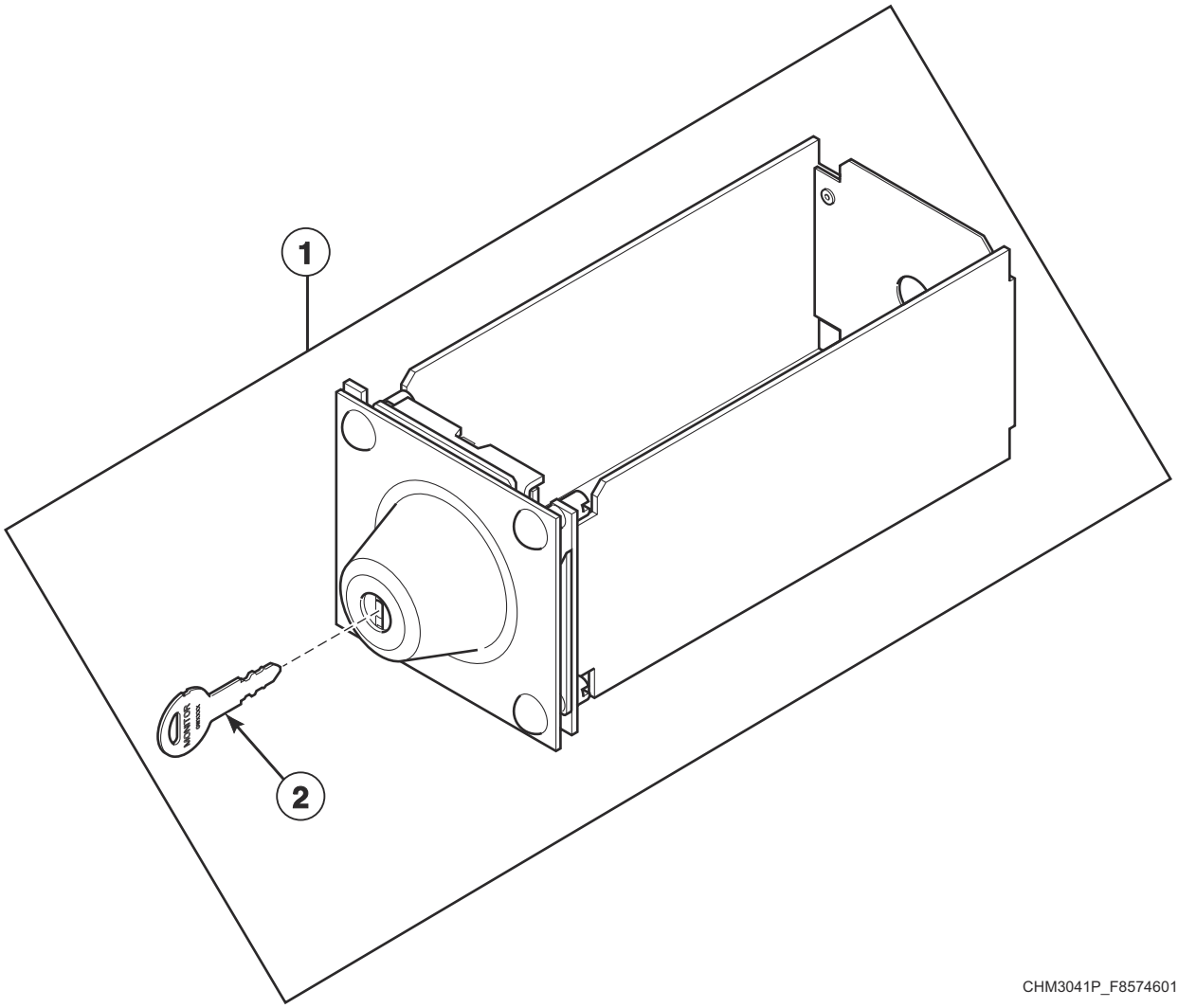

CHM3041P_F8574601

© Copyright, Alliance Laundry Systems LLC – DO NOT COPY or TRANSMIT

Optional Coin Box

REF	PART NO.	DESCRIPTION	COMMENTS
1	F160672	Coin Box	UG21; 20 and 30 pound models
	F8182001	Coin Drawer Assembly	40 and 60 pound models
2	F160420	Key	GW0023

© Copyright, Alliance Laundry Systems LLC – DO NOT COPY or TRANSMIT

Card Reader

KY Models

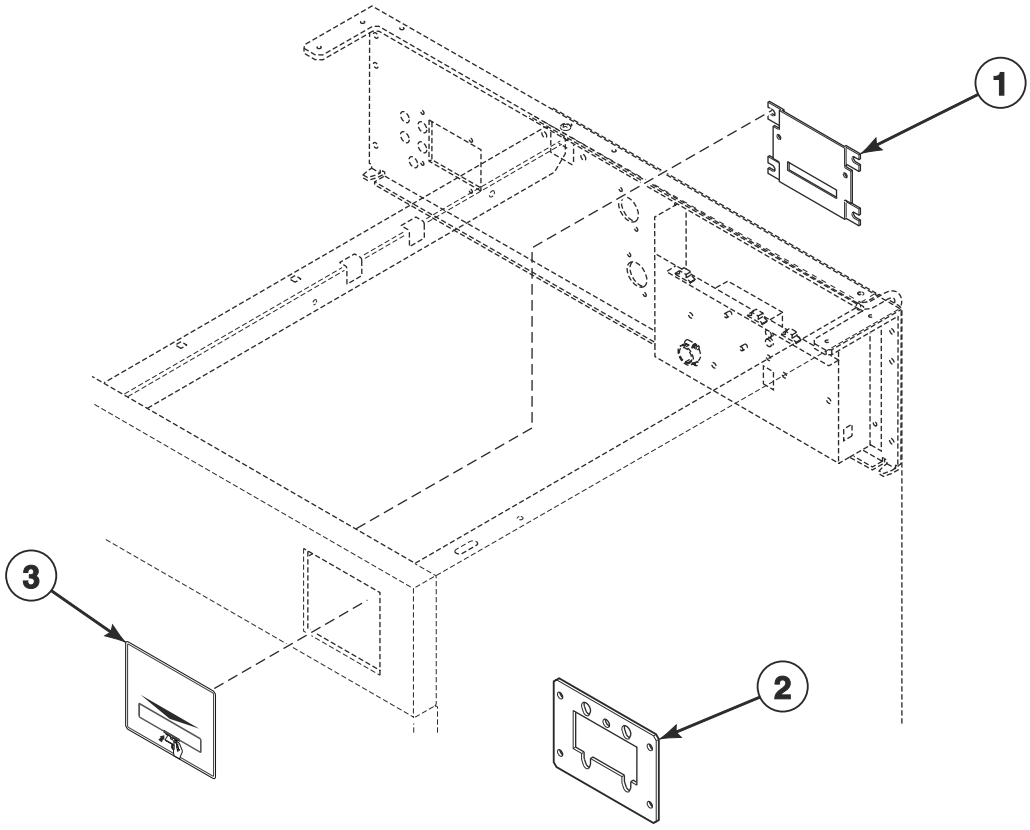

CHM3434P_F8574601

© Copyright, Alliance Laundry Systems LLC – DO NOT COPY or TRANSMIT

Card Reader

REF	PART NO.	DESCRIPTION	COMMENTS
1	F8201501	Card Plate Assembly	
2	70208801	Mounting Plate	
3	70334301	Card Reader Overlay	

© Copyright, Alliance Laundry Systems LLC – DO NOT COPY or TRANSMIT

Front Panel, Control Panel and Overlays - Coin Models

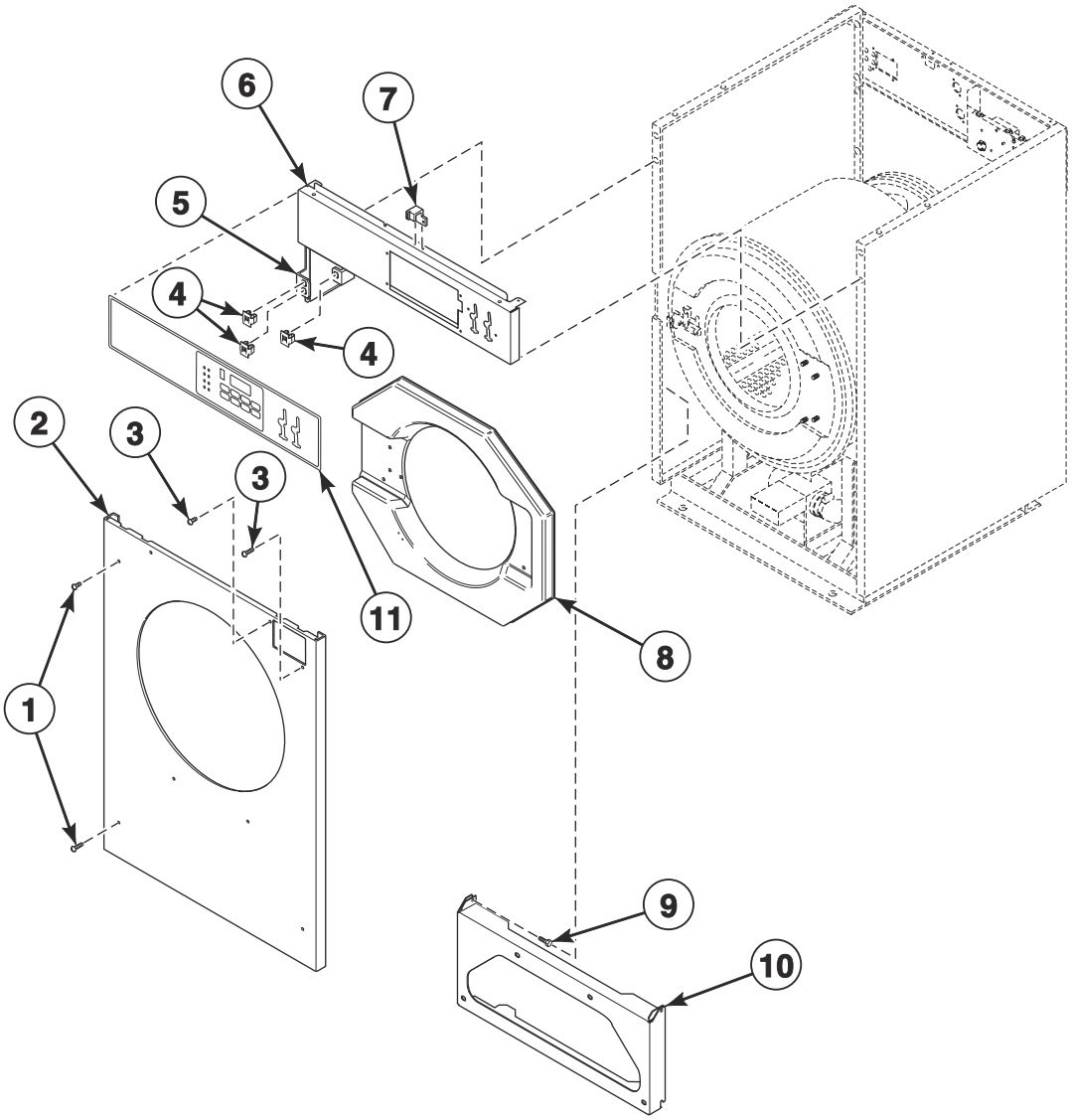

CHM3196P_F8574601

© Copyright, Alliance Laundry Systems LLC – DO NOT COPY or TRANSMIT

Front Panel, Control Panel and Overlays - Coin Models

REF	PART NO.	DESCRIPTION	COMMENTS
1	F8117601	Screw	
2	F8171301	Front Panel	20 pound models; Stainless steel
	F8173001	Front Panel	30 pound models; Stainless steel
	F8173101P	Front Panel	40 pound models; Stainless steel
	F8173201P	Front Panel	60 pound models; Stainless steel
3	801019	Screw	
4	70030501	Expansion Clip	
5	F8186702	Gusset Plate	Left
6	F8038502	Control Panel Assembly	20 pound models
	F8038602	Control Panel Assembly	30 pound models
	F8038702	Control Panel Assembly	40 pound models
	F8038802	Control Panel Assembly	60 pound models
7	F8201001	Top Cover Latch	
8	F8658701	Door Bezel	20 pound models; Black
	F170416-2	Door Bezel	20 pound models; Pantone 403; Models through 1/10/10
	F8658801	Door Bezel	20 pound models; Gray; Models starting 1/11/10
	F8658901	Door Bezel	30 pound models; Black
	F8659101	Door Bezel	40 and 60 pound models; Black
9	F430174	Screw	
10	F8173801	Front Cabinet Brace	20 pound models
	F8173901	Front Cabinet Brace	30 pound models
	F8174001	Front Cabinet Brace	40 pound models
	F8174101	Lower Cabinet Brace	60 pound models
11	F8295501	Control Panel Overlay	HC 20 pound coin models; Single coin drop
	F8295502	Control Panel Overlay	HC 20 pound coin models; Dual coin drop
	F8295601	Control Panel Overlay	HC 30 pound coin models; Single coin drop
	F8295602	Control Panel Overlay	HC 30 pound coin models; Dual coin drop
	F8295701	Control Panel Overlay	HC 40 pound coin models; Single coin drop
	F8295702	Control Panel Overlay	HC 40 pound coin models; Dual coin drop
	F8295801	Control Panel Overlay	HC 60 pound coin models; Single coin drop
	F8295802	Control Panel Overlay	HC 60 pound coin models; Dual coin drop

© Copyright, Alliance Laundry Systems LLC – DO NOT COPY or TRANSMIT

Front Panel and Control Panel - Card Ready and OPL Models

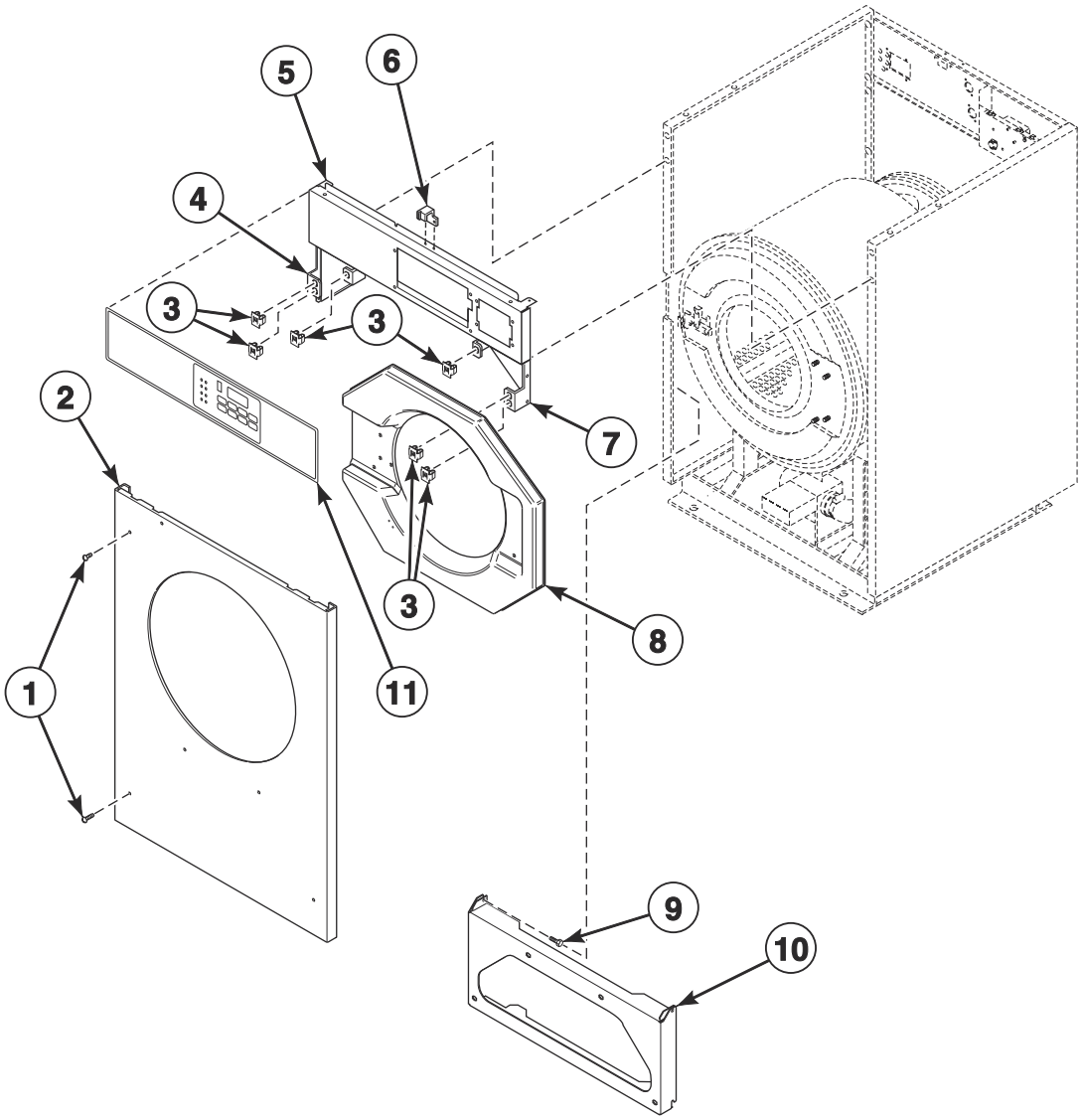

CHM3197P_F8574601

© Copyright, Alliance Laundry Systems LLC – DO NOT COPY or TRANSMIT

Front Panel and Control Panel - Card Ready and OPL Models

REF	PART NO.	DESCRIPTION	COMMENTS
1	F8117601	Screw	
2	F8171302P	Front Panel	20 pound models; Stainless steel
	F8173002P	Front Panel	30 pound models; Stainless steel
	F8173102P	Front Panel	40 pound models; Stainless steel
	F8173202P	Front Panel	60 pound models; Stainless steel
3	70030501	Expansion Clip	
4	F8186702	Gusset Plate	Left
5	F8038504	Control Panel Assembly	20 pound models
	F8038604	Control Panel Assembly	30 pound models
	F8038704	Control Panel Assembly	40 pound models
	F8038804	Control Panel Assembly	60 pound models
6	F8201001	Top Cover Latch	
7	F8186701	Gusset Plate	Right
8	F8658701	Door Bezel	SC and UC 20 pound models; Black
	F170416-2	Door Bezel	HC 20 pound models; Pantone 403; Models through 1/10/10
	F8658801	Door Bezel	HC 20 pound models; Gray; Models starting 1/11/10
	F8658901	Door Bezel	30 pound models; Black
	F8659101	Door Bezel	40 and 60 pound models; Black
9	F430174	Screw	
10	F8173801	Front Cabinet Brace	20 pound models
	F8173901	Front Cabinet Brace	30 pound models
	F8174001	Front Cabinet Brace	40 pound models
	F8174101	Lower Cabinet Brace	60 pound models
11	F8295503	Overlay	HC 20 pound KY models
	F8295603	Overlay	HC 30 pound KY models
	F8295703	Overlay	HC 40 pound KY models
	F8295803	Overlay	HC 60 pound KY models
	F8296001	Control Panel Overlay	SC 20 pound models
	F8296101	Control Panel Overlay	SC 30 pound models
	F8296201	Control Panel Overlay	SC 40 pound models
	F8296301	Control Panel Overlay	SC 60 pound models
	F8226301	Control Panel Overlay	UC 20 pound models
	F8226401	Control Panel Overlay	UC 30 pound models
	F8226501	Control Panel Overlay	UC 40 pound models
	F8226601	Control Panel Overlay	UC 60 pound models

© Copyright, Alliance Laundry Systems LLC – DO NOT COPY or TRANSMIT

Panels

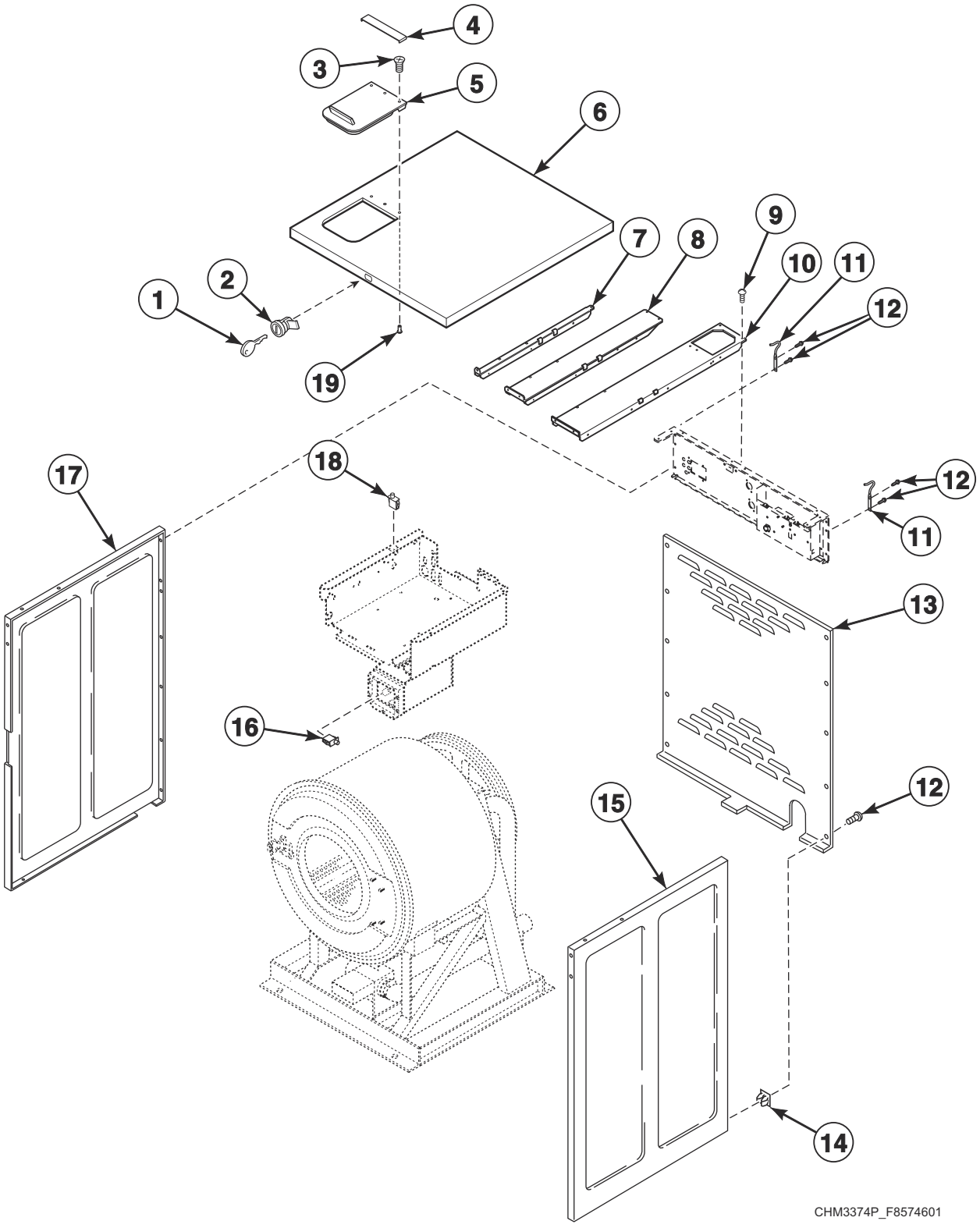

© Copyright, Alliance Laundry Systems LLC – DO NOT COPY or TRANSMIT

Panels

REF	PART NO.	DESCRIPTION	COMMENTS
1	70155603	Key	RL003
2	44089303P	Panel Lock	
3	F8230601	Screw	
4	F8091701	Lid Clamp	
5	F8048101	Dispenser Lid	Gray
6	F8040201	Top Cover	20 pound models
	F8017401	Top Cover	30 pound models
	F8040301	Top Cover	40 pound models
	F8040401P	Top Cover	60 pound models
7	F8043501	Top Cabinet Brace	20 pound models
8	F8043701	Top Cabinet Brace	30 pound models
9	F430174	Screw	
10	F8043801	Top Cabinet Brace	40 pound models
	F8043901	Top Cabinet Brace	60 pound models
11	F8258601	Top Cover Hinge	
12	F8206901	Screw	
13	F8176201P	Rear Panel	20 pound models
	F8176301	Rear Panel	30 pound models
	F8177701P	Rear Panel	40 pound models
	F8177501P	Rear Panel	60 pound models
14	70030501	Expansion Clip	
15	F8042901P	Right Side Panel	20 pound models; Vinyl
	F8043101P	Right Side Panel	30 pound models; Vinyl
	F8043201P	Right Side Panel	40 pound models; Vinyl
	F8043301P	Right Side Panel	60 pound models; Vinyl
16	70413301	Pushbutton Switch	Coin models
17	F8042902P	Left Side Panel	20 pound models; Vinyl
	F8043102P	Left Side Panel	30 pound models; Vinyl
	F8043202P	Left Side Panel	40 pound models; Vinyl
	F8043302P	Left Side Panel	60 pound models; Vinyl
18	70413301	Pushbutton Switch	
19	F8230501	Bolt	

© Copyright, Alliance Laundry Systems LLC – DO NOT COPY or TRANSMIT

Door

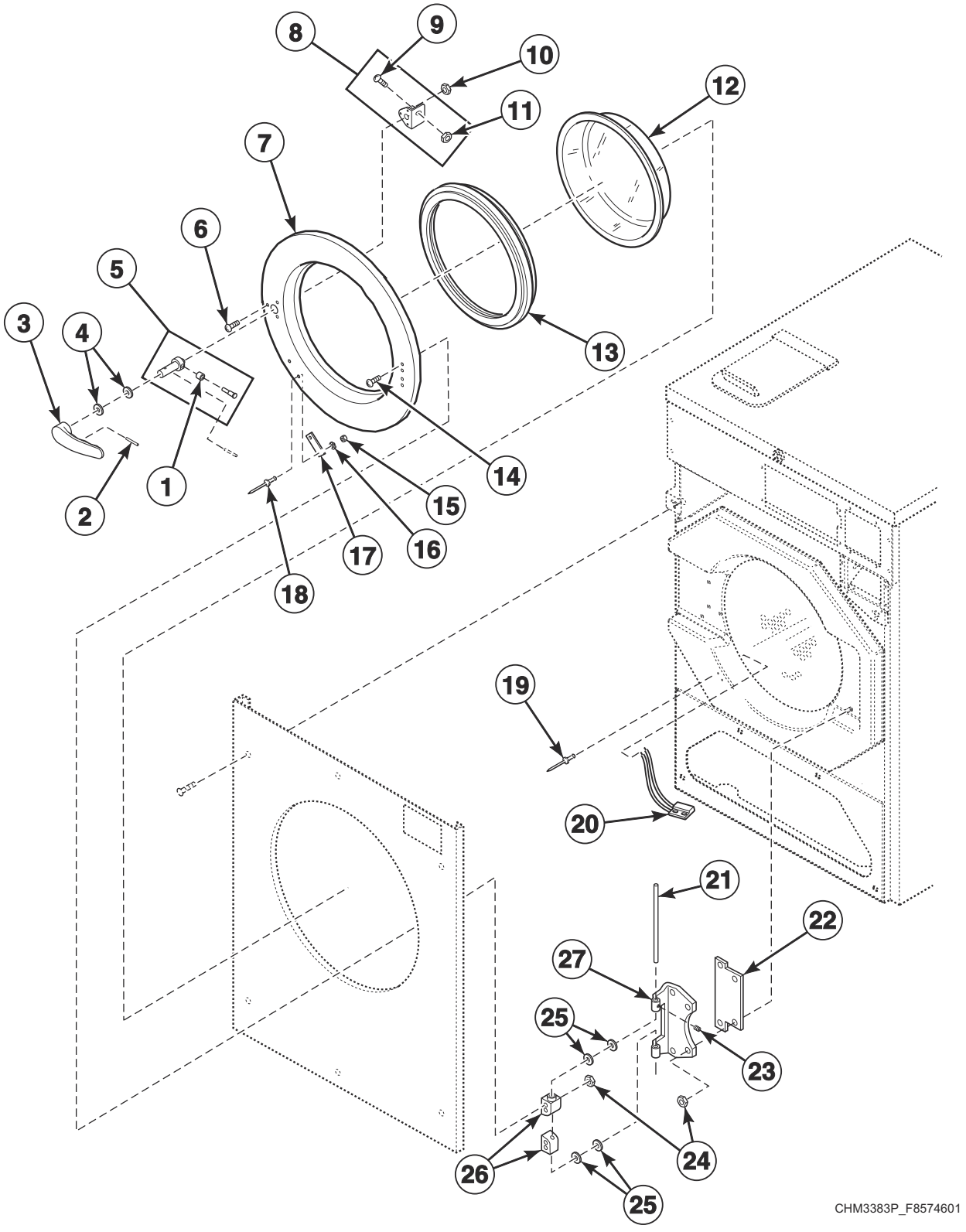

© Copyright, Alliance Laundry Systems LLC – DO NOT COPY or TRANSMIT

Door

REF	PART NO.	DESCRIPTION	COMMENTS
	F8617201	Door Assembly	20 pound SC and UC models; Includes items 1-8 and 20-27
	F8187203	Door Assembly	20 pound HC models; Includes items 1-8 and 20-27
	F8617301	Door Assembly	30 pound SC and UC models; Includes items 1-8 and 20-27
	F8187303	Door Assembly	30 pound HC models; Includes items 1-8 and 20-27
	F8617411	Door Assembly	40 and 60 pound SC and UC models; Includes items 1-8 and 20-27
	F8187403	Door Assembly	40 and 60 pound HC models; Includes items 1-8 and 20-27
1	F8221701	Bearing Sleeve	
2	F431222	Spring Pin	
3	F8199401P	Door Handle	SC and UC models; Black
	F8199501	Door Handle	HC models; Gray
4	F431916	Washer	
5	F8221403	Door Latch Arm Assembly	
6	F8535501	Screw	
	F8508101	Bolt	Chrome
7	F0602431-02	Door	20 pound models
	F0602837-02	Door	30 pound models
	F8507501P	Door	20 pound models; Chrome
	F8752601	Door	30 pound models; Chrome
	F602842-2	Door	40 and 60 pound models
	F8752701	Door	40 and 60 pound models; Polished
8	F8567501	Door Handle Spacer Kit	Includes items 9 and 11
9	F430532	Screw	
10	F430232	Nut	
11	F431041	Nut	
12	F290205P	Door Glass Kit	20 pound SC and UC models; 20 pound HC models through 1/10/10
	F8675701P	Door Glass	20 pound HC models; Models starting 1/11/10
	F8485301P	Door Glass	30 pound SC and UC models; 30 pound HC models through 1/10/10
	F8485305	Door Glass	30 pound HC models; Models starting 1/11/10
	F8485401P	Door Glass	40 and 60 pound SC and UC models; 40 and 60 pound HC models through 1/10/10
	F8485405	Door Glass	40 and 60 pound HC models; Models starting 1/11/10
13	F200000202	Door Gasket	20 pound models
	F8111602	Door Gasket	30 pound models
	F8111502	Door Gasket	40 and 60 pound models
14	F430974	Bolt	
	F8508101	Bolt	Chrome
15	F431022	Nut	
16	F431113	Washer	
17	F8390801	Magnet	
18	F431223	Pop Rivet	
19	F8245101	Blind Rivet	
20	F8066802	Reed Switch Assembly	
21	F602813-2	Rod	20 and 30 pound models
	F602813-3	Rod	40 pound models
22	F200131000P	Door Hinge Shim Kit	
23	F430536	Screw	
24	F430215	Nut	
25	F431929	Washer	
26	F150271	Door Mount	
27	F190216P	Door Hinge	

© Copyright, Alliance Laundry Systems LLC – DO NOT COPY or TRANSMIT

Door Lock

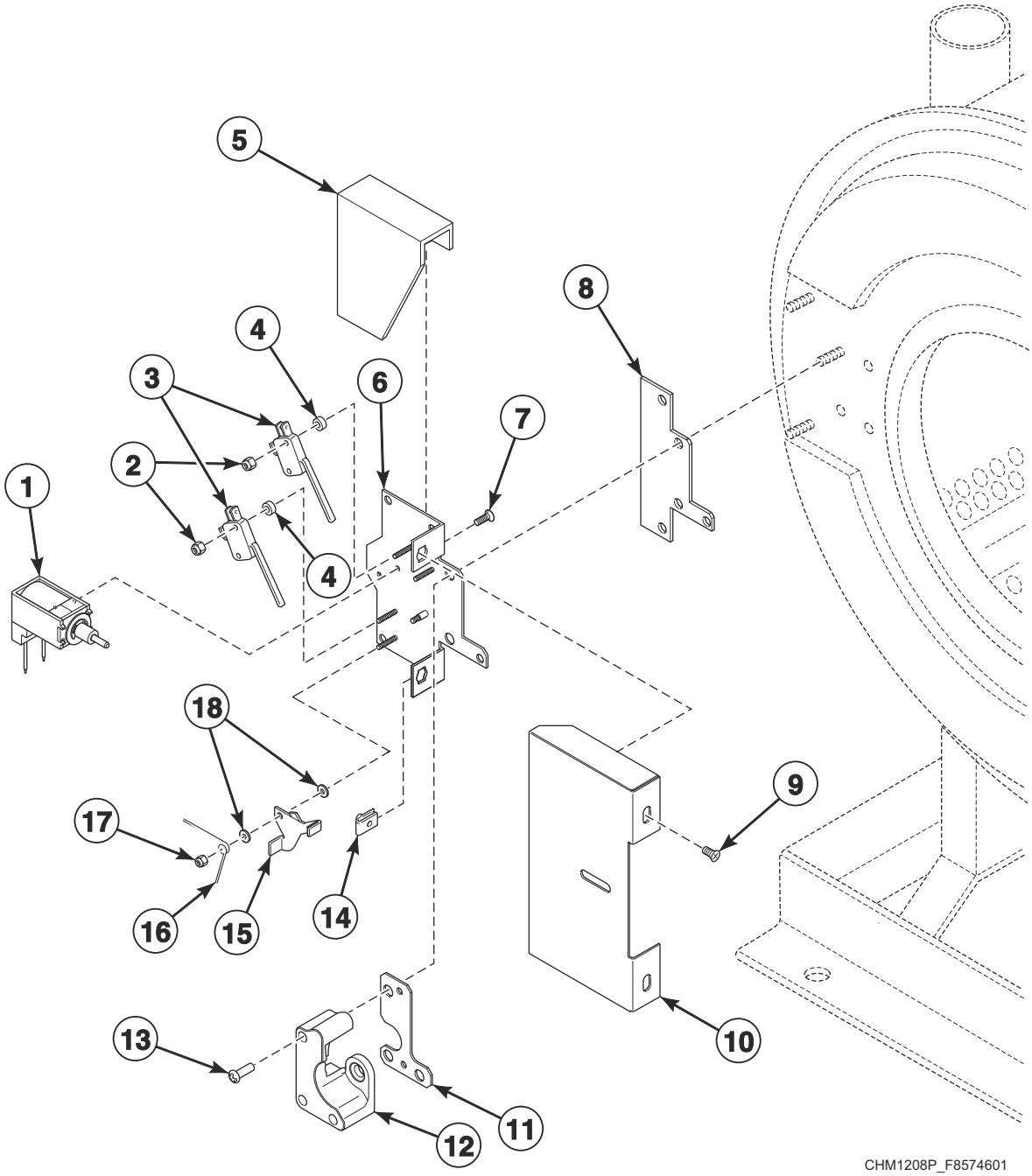

© Copyright, Alliance Laundry Systems LLC – DO NOT COPY or TRANSMIT

Door Lock

REF	PART NO.	DESCRIPTION	COMMENTS
	F8626501	Door Lock Assembly Kit	Includes F8339902 External Door Lock Harness; Models through 10/31/10
	F8632401	Door Lock Assembly	Includes F8340001 External Door Lock Harness; Models starting 11/1/10
	N/A	External Door Lock Harness	Includes F8224201 Solenoid; Models through 10/31/10; Order F977P3 Door Lock Solenoid Replacement Kit
	F8340001	External Door Lock Harness	Models starting 11/1/10
1	F977P3	Door Lock Solenoid Replacement Kit	Includes F8340101 Solenoid; Models through 10/31/10
	F8626501	Door Lock Assembly Kit	Includes items 12, F8567501 Door Handle Spacer Kit, F8221401 Door Latch Arm Assembly, F431222 Spring Pin, F8632401 Door Lock Assembly and F8359401 Harness; Models starting 11/1/10
2	F430225	Nut	
3	F200203200	Door Lock Microswitch	
4	F320200	Door Lock Splash Shield	
5	F431901	Spacer	
6	F8223202	Door Lock Plate Assembly	
7	F430977	Screw	
8	F8059701	Door Lock Plate Shim	Models through 9/25/09
	F8344401	Door Lock Plate Shim	Models starting 9/26/09
9	F430956	Screw	
10	F8245001	Door Lock Cover	
11	F8453401	Door Shim	
12	F8223601	Door Lock Catch	Models through 10/31/10
	F8344501	Door Lock Catch	Models starting 11/1/10
13	F8270701	Bolt	
14	F430264	Nut	
15	F8223401	Door Lock Switch Lever	
16	F8070301	Torsion/Door Lock Spring	
17	F430232	Nut	
18	F431902	Washer	

N/A = Part no longer available

© Copyright, Alliance Laundry Systems LLC – DO NOT COPY or TRANSMIT

Basket

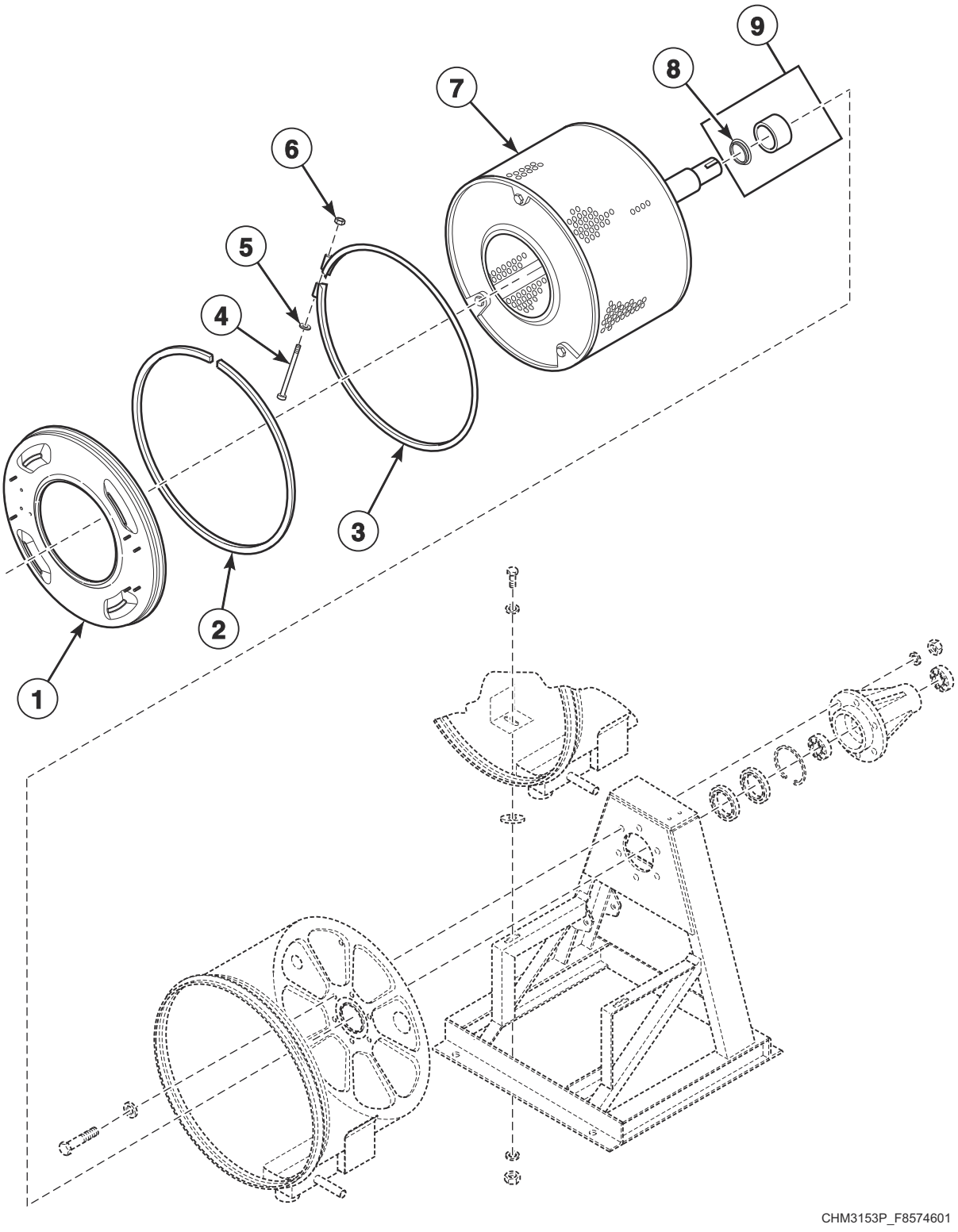

© Copyright, Alliance Laundry Systems LLC – DO NOT COPY or TRANSMIT

Basket

REF	PART NO.	DESCRIPTION	COMMENTS
	389P4	Basket Tool Kit	Purchase; Use with F935P3, F936P3, F938P3 and F939P3 Pressfit Upgrade Kits; Requires F460129P Bearing Puller Tool
	390P4-1	Basket Rental Tool Kit	Use with F935P3, F936P3, F938P3 and F939P3 Pressfit Upgrade Kits; Requires F460129P Bearing Puller Tool
	F460129P	Basket Puller Tool	
1	F8229401	Shell Front Assembly	20 pound models
	F8229501	Shell Front Assembly	30 pound models
	F8229601	Shell Front Assembly	40 pound models
	F8229701	Shell Front Assembly	60 pound models
2	F8513501	Shell Front Gasket Kit	
3	F8537801	Shell Band Kit	20 pound models
	F8388002	Clamp Ring Assembly	30 pound models
	F8537803	Shell Band Kit	40 pound models
	F8537804	Shell Band Kit	60 pound models
4	F430518	Screw	
5	F430317	Washer	
6	F430215	Nut	
7	F935P3	Pressfit Upgrade Kit	20 pound models; Models through 3/31/10; Models that have not been upgraded with P935P3 Pressfit Upgrade Kit; Includes items 8, 9, F8347801 Basket Assembly and F747001 Trunnion Kit
	F936P3	Pressfit Upgrade Kit	30 pound models; Models through 3/31/10; Includes items 8, 9, F8347901 Basket Assembly and F747002 Trunnion Kit
	F938P3	Pressfit Upgrade Kit	40 pound models; Models through 3/31/10; Includes items 8, 9, F8336301 Basket Assembly and F747003 Trunnion Kit
	F939P3	Pressfit Upgrade Kit	60 pound models; Models through 3/31/10; Includes items 8, 9, F8336501 Basket Assembly and F747005 Trunnion Kit
	F8391302	Basket Assembly	20 pound models; Models that have been upgraded with F935P3 Pressfit Upgrade Kit or models starting 4/1/10; Includes items 8 and 9
	F8347901P	Basket Assembly	30 pound models; Models that have been upgraded with F936P3 Pressfit Upgrade Kit or models starting 4/1/10; Includes items 8 and 9
	F8391702	Basket Assembly	40 pound models; Models that have been upgraded with F938P3 Pressfit Upgrade Kit or models starting 4/1/10; Includes items 8 and 9
	F8502802	Basket Assembly	60 pound models; Replaces F8391901P Basket Assembly; Models that have been upgraded with F939P3 Pressfit Upgrade Kit or models starting 4/1/10; Includes items 8 and 9
8	F8336801	Excluder Seal	20 pound models; Models that have been upgraded with F935P3 Pressfit Upgrade Kit or models starting 4/1/10
	F8336901	Excluder Seal	30 pound models; Models that have been upgraded with F936P3 Pressfit Upgrade Kit or models starting 4/1/10
	F8337001	Excluder Seal	40 pound models; Models that have been upgraded with F938P3 Pressfit Upgrade Kit or models starting 4/1/10
	F8337101	Excluder Seal	60 pound models; Models that have been upgraded with F939P3 Pressfit Upgrade Kit or models starting 4/1/10
9	F8312001P	Shaft Seal Sleeve	20 pound models; Models that have not been upgraded with F935P3 Pressfit Upgrade Kit or models through 3/31/10
	F8312004P	Shaft Seal Sleeve	30 pound models; Models that have not been upgraded with F936P3 Pressfit Upgrade Kit or models through 3/31/10
	F8312006P	Shaft Seal Sleeve	40 pound models; Models that have not been upgraded with F938P3 Pressfit Upgrade Kit or models through 3/31/10
	F8343914	Shaft Seal Sleeve	60 pound models; Models that have not been upgraded with F939P3 Pressfit Upgrade Kit or models through 3/31/10
10	F8343901P	Shaft Seal Sleeve Kit	20 pound models; Models that have been upgraded with F935P3 Pressfit Upgrade Kit or models starting 4/1/10; Includes items 8 and 9
	F8343904P	Shaft Seal Sleeve Kit	30 pound models; Models that have been upgraded with F936P3 Pressfit Upgrade Kit or models starting 4/1/10; Includes items 8 and 9
	F8343906P	Shaft Seal Sleeve Kit	40 pound models; Models that have been upgraded with F938P3 Pressfit Upgrade Kit or models starting 4/1/10; Includes items 8 and 9
	F8343909P	Shaft Seal Sleeve Kit	60 pound models

© Copyright, Alliance Laundry Systems LLC – DO NOT COPY or TRANSMIT

Trunnion

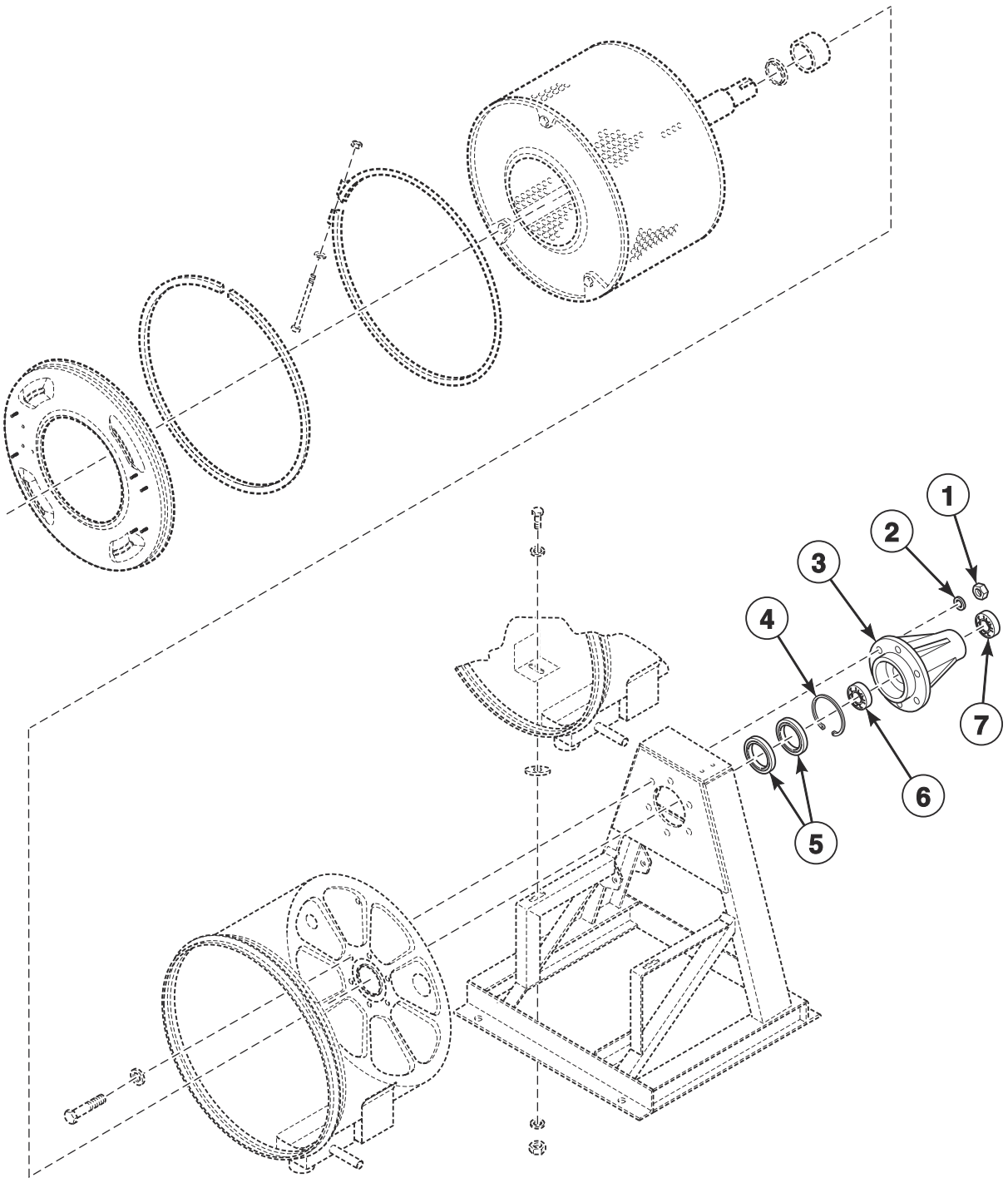

CHM3153PA_F8574601

© Copyright, Alliance Laundry Systems LLC – DO NOT COPY or TRANSMIT

Trunnion

REF	PART NO.	DESCRIPTION	COMMENTS
1	F430239	Nut	20 pound models
	F430240	Nut	All other models
2	F431128	Washer	20 pound models
	F431131	Washer	All other models
3	F747001	Trunnion Kit	20 pound models; Models that have been upgraded with F935P3 Pressfit Upgrade Kit or models starting 4/1/10; Includes items 5-7
	F747002	Trunnion Kit	30 pound models; Models that have been upgraded with F935P3 Pressfit Upgrade Kit or models starting 4/1/10; Includes items 5-7
	F747003	Trunnion Kit	40 pound models; Models that have been upgraded with F935P3 Pressfit Upgrade Kit or models starting 4/1/10; Includes items 5-7
	F747005	Trunnion Kit	60 pound models; Models that have been upgraded with F935P3 Pressfit Upgrade Kit or models starting 4/1/10; Includes items 5-7
4	F8344901	Retaining Ring	20 pound models; Models that have been upgraded with F935P3 Pressfit Upgrade Kit or models starting 4/1/10
	F8345001	Retaining Ring	30 pound models; Models that have been upgraded with F936P3 Pressfit Upgrade Kit or models starting 4/1/10
	F8337801	Retaining Ring	40 pound models; Models that have been upgraded with F938P3 Pressfit Upgrade Kit or models starting 4/1/10
	F8337901	Retaining Ring	60 pound models; Models that have been upgraded with F939P3 Pressfit Upgrade Kit or models starting 4/1/10
5	F8203801	Triple Lip Seal	20 pound models
	F8203802	Triple Lip Seal	30 pound models
	F8203803	Triple Lip Seal	40 pound models
	F8203806	Triple Lip Seal	60 pound models
6	F100137P	Bearing	6308 2RS C3; Front; 20 and 40 pound models
	F100123P	Bearing	6309 2RS C3; Front; 30 pound models
	F100135	Bearing	6313 2RS C3; Front; 60 pound models
7	F100136P	Bearing	6307 2RS C3; Rear; 20 pound models
	F100108	Bearing	6208 2RS C3; Rear; 30 pound models
	F100134	Bearing	6310 2RS C3; Rear; 40 and 60 pound models

© Copyright, Alliance Laundry Systems LLC – DO NOT COPY or TRANSMIT

Shell and Frame

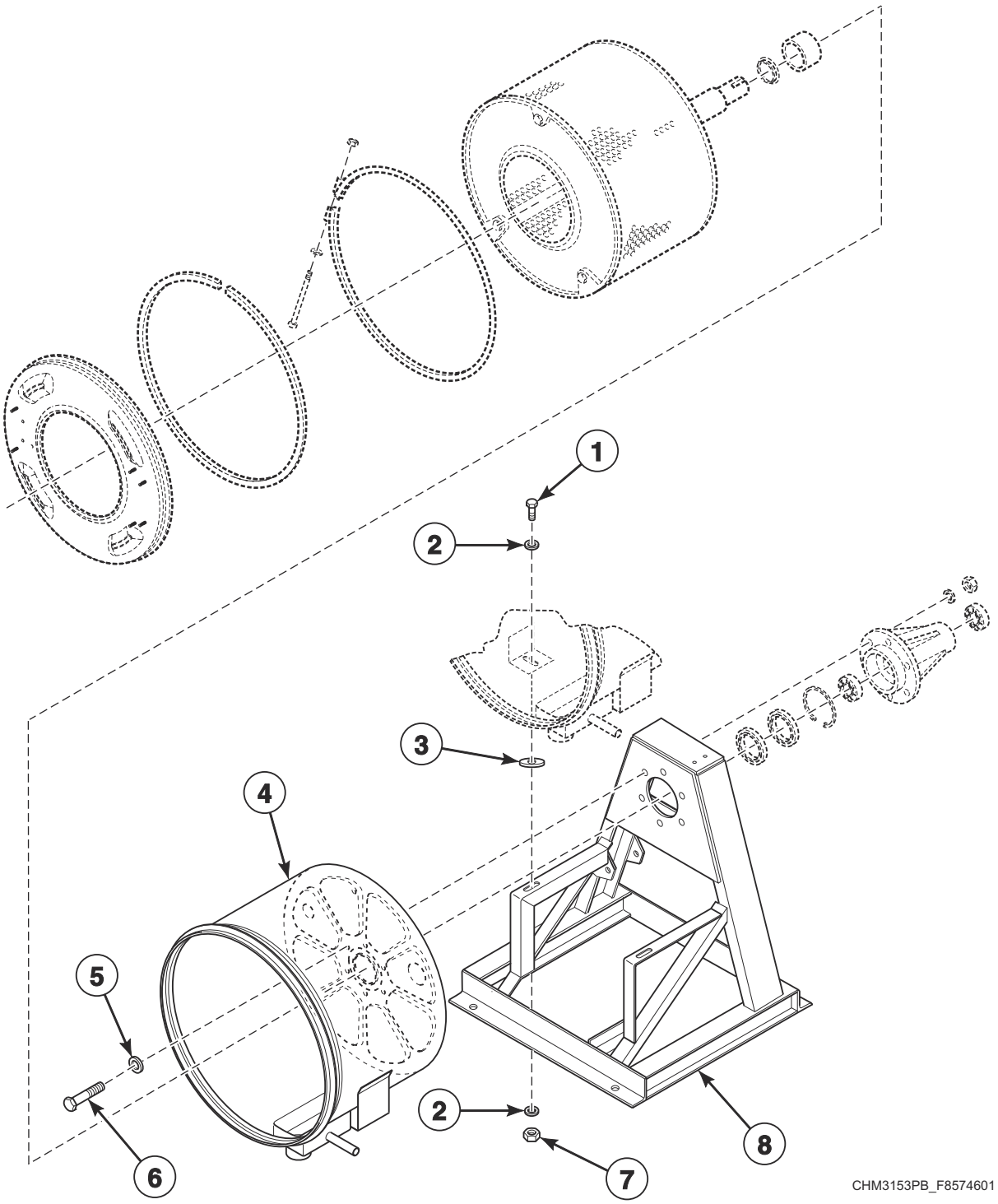

© Copyright, Alliance Laundry Systems LLC – DO NOT COPY or TRANSMIT

Shell and Frame

REF	PART NO.	DESCRIPTION	COMMENTS
1	F430942	Screw	
2	M400081	Washer	
3	F430303	Washer	
4	F8179201	Shell Weldment	20 pound vended models; Standard
	F8179202	Shell Weldment	20 pound OPL models; Electric heat
	F8179203	Shell Weldment	20 pound OPL models; Standard
	F8179301	Shell Weldment	30 pound vended models; Standard
	F8179302	Shell Weldment	30 pound OPL models; Electric heat
	F8179303	Shell Weldment	30 pound OPL models; Standard
	F8179401	Shell Weldment	40 pound vended models; Standard
	F8179402	Shell Weldment	40 pound OPL models; Electric heat
	F8179403	Shell Weldment	40 pound OPL models; Standard
	F8179501	Shell Weldment	60 pound vended models; Standard
	F8179502	Shell Weldment	60 pound OPL models; Electric heat
	F8179503	Shell Weldment	60 pound OPL models; Standard
5	F431128	Washer	20 pound models
	F431131	Washer	All other models
6	F430949	Screw	20 pound models
	F8442702	Screw	All other models
7	F430218	Nut	
8	F8195901	Frame Weldment	20 pound models
	F8196001	Frame Weldment	30 pound models
	F8196101	Frame Weldment	40 pound models
	F8199101	Frame Weldment	60 pound models

© Copyright, Alliance Laundry Systems LLC – DO NOT COPY or TRANSMIT

Drain Plumbing

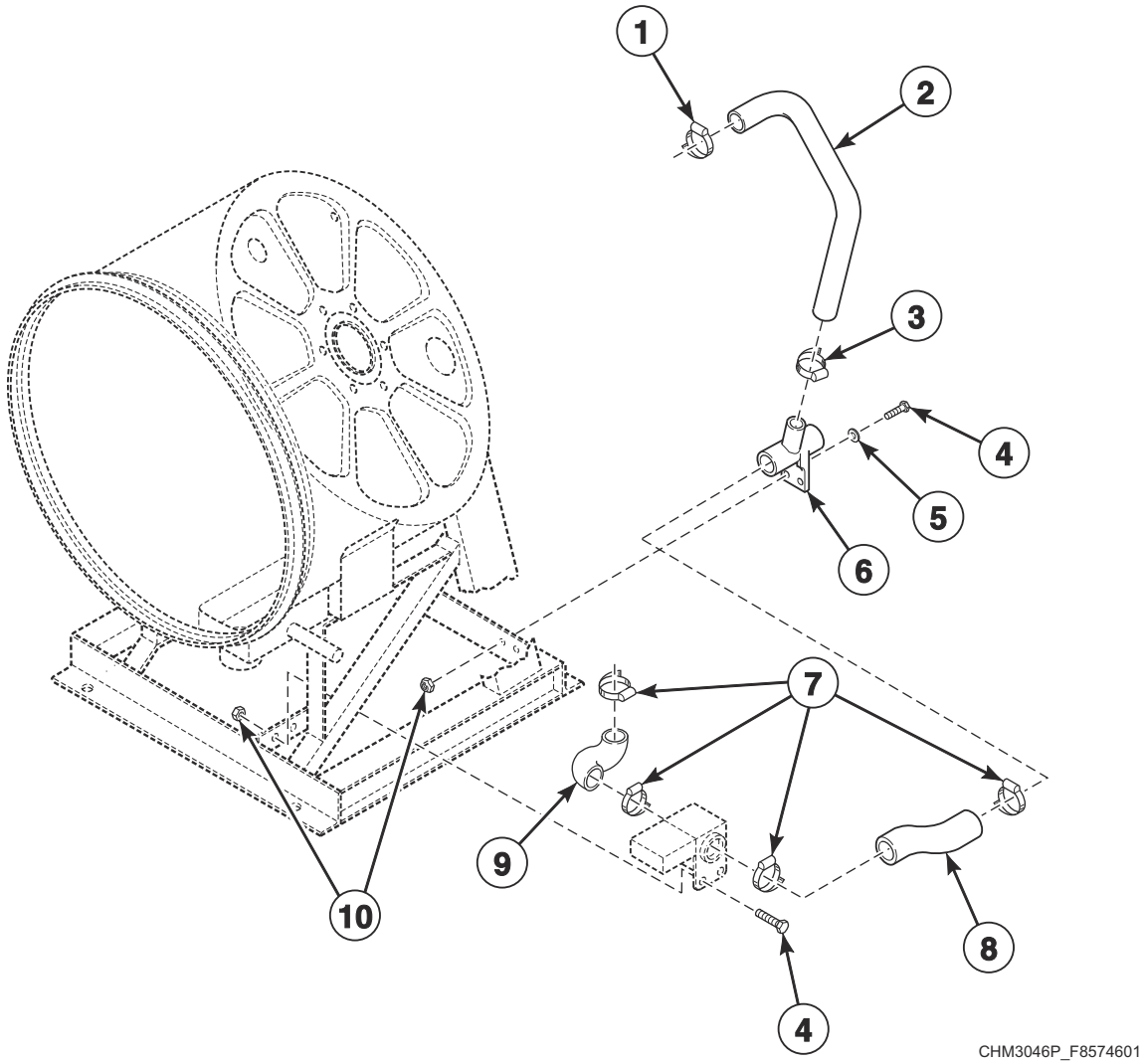

© Copyright, Alliance Laundry Systems LLC – DO NOT COPY or TRANSMIT

Drain Plumbing

REF	PART NO.	DESCRIPTION	COMMENTS
1	F200213	Hose Clamp	No. 40
2	F150308	Overflow Hose	20 and 30 pound models
	F0200238-00	Overflow Hose	40 pound models
	F8337701	Overflow Hose	40 pound models; Electric heat
	F150417	Overflow Hose	60 pound models
3	F200215	Hose Clamp	40 pound models
	F200213	Hose Clamp	No. 40; All other models
4	F430107	Screw	
5	F430317	Washer	
6	F8017101	Drain Connector Tee	20 and 30 pound models
	F8752101	Drain Tee	40 and 60 pound models
7	F200213	Hose Clamp	No. 40; 20 and 30 pound models
	F200201	Hose Clamp	No. 56; 40 and 60 pound models
8	F8233101	Drain Hose	Rear; 20 pound models
	F8233102	Drain Hose	Rear; 30 pound models
	F8231901	Drain Hose	Rear; 40 pound models
	F8231902	Drain Hose	Rear; 60 pound models
9	F8233001	Drain Hose	Front; 20 and 30 pound models
	F8232901	Drain Hose	Front; 40 and 60 pound models
10	F430215	Nut	

© Copyright, Alliance Laundry Systems LLC – DO NOT COPY or TRANSMIT

Drain Valve Assembly - 20 and 30 Pound Models

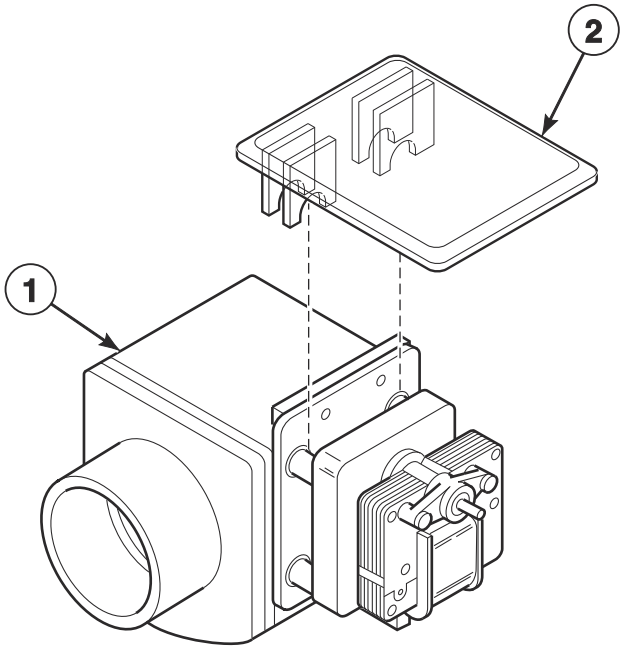

CHM3547P

© Copyright, Alliance Laundry Systems LLC – DO NOT COPY or TRANSMIT

Drain Valve Assembly - 20 and 30 Pound Models

REF	PART NO.	DESCRIPTION	COMMENTS
	F8504601	Spring	Use with item 1
1	803292P	Gravity Drain Valve	220 Volt
	803293P	Drain Valve	120 Volt
2	F200133600	Drain Valve Cover	

© Copyright, Alliance Laundry Systems LLC – DO NOT COPY or TRANSMIT

Drain Valve Assembly - 40 and 60 Pound Models

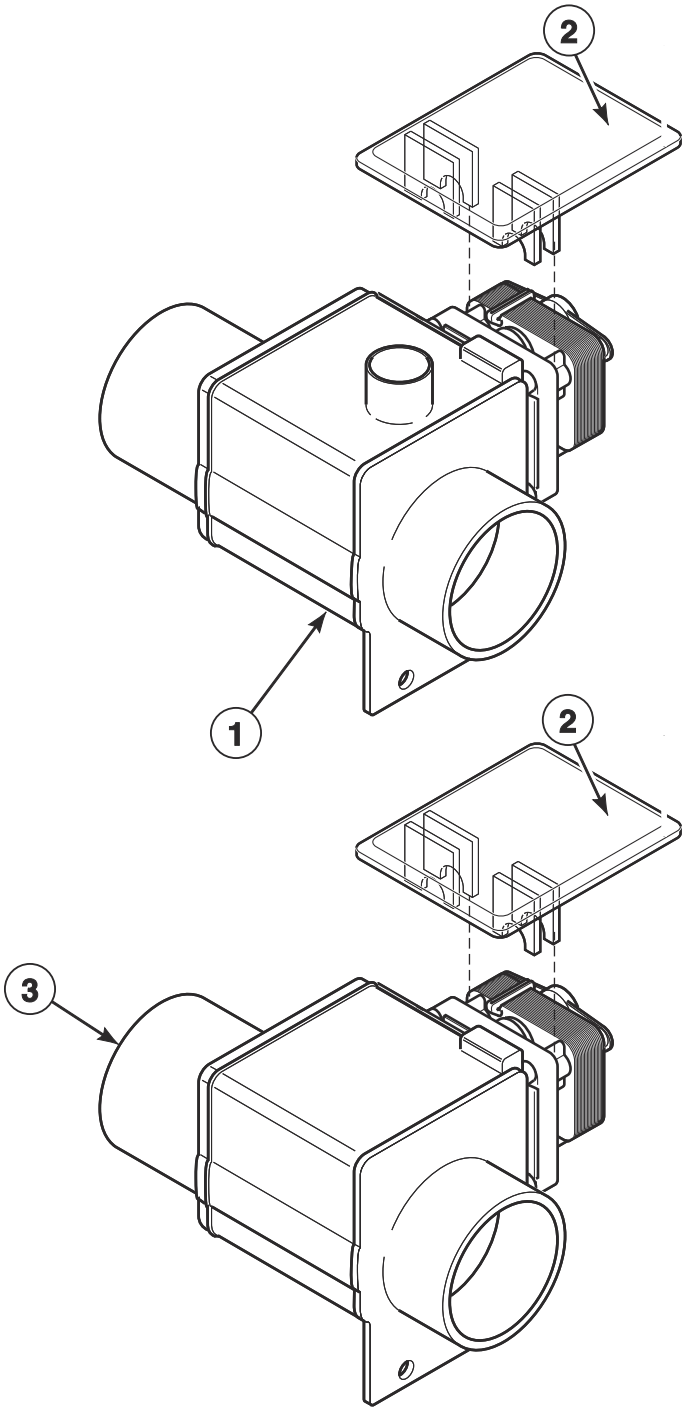

CHM3548P

© Copyright, Alliance Laundry Systems LLC – DO NOT COPY or TRANSMIT

Drain Valve Assembly - 40 and 60 Pound Models

REF	PART NO.	DESCRIPTION	COMMENTS
	F8504701	Spring	Use with F8406303 Drain Valve and F8602601 Drain Valve
1	F8406303	Drain Valve	220 Volt; Models with heat
2	F200133600	Drain Valve Cover	
3	F8602601	Drain Valve	220 Volt; Models with heat

© Copyright, Alliance Laundry Systems LLC – DO NOT COPY or TRANSMIT

Steam Filter (Optional) and Water Supply Hose

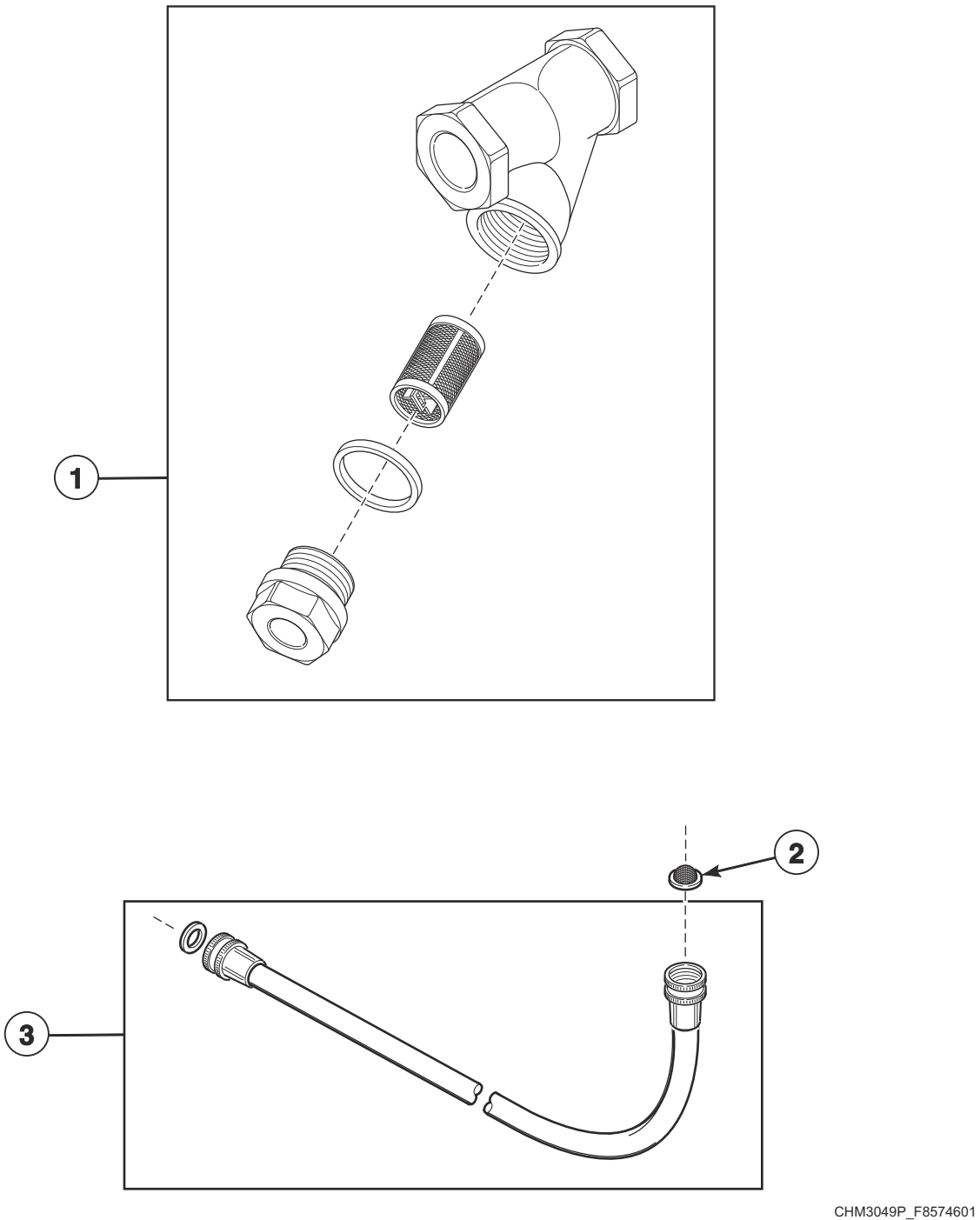

CHM3049P_F8574601

© Copyright, Alliance Laundry Systems LLC – DO NOT COPY or TRANSMIT

Steam Filter (Optional) and Water Supply Hose

REF	PART NO.	DESCRIPTION	COMMENTS
1	F270307	Steam Filter	1/2 inch
	F270308	Steam Filter	3/4 inch
2	803615	Washer	Filter
3	F200116	Fill Hose	3/8 inch; Standard thread
	F200108P	Water Hose	1/2 inch; Standard or metric thread
	F8544601	Fill Hose Kit	Metric thread

© Copyright, Alliance Laundry Systems LLC – DO NOT COPY or TRANSMIT

Fill Plumbing Assembly (Drawing 1 of 2)

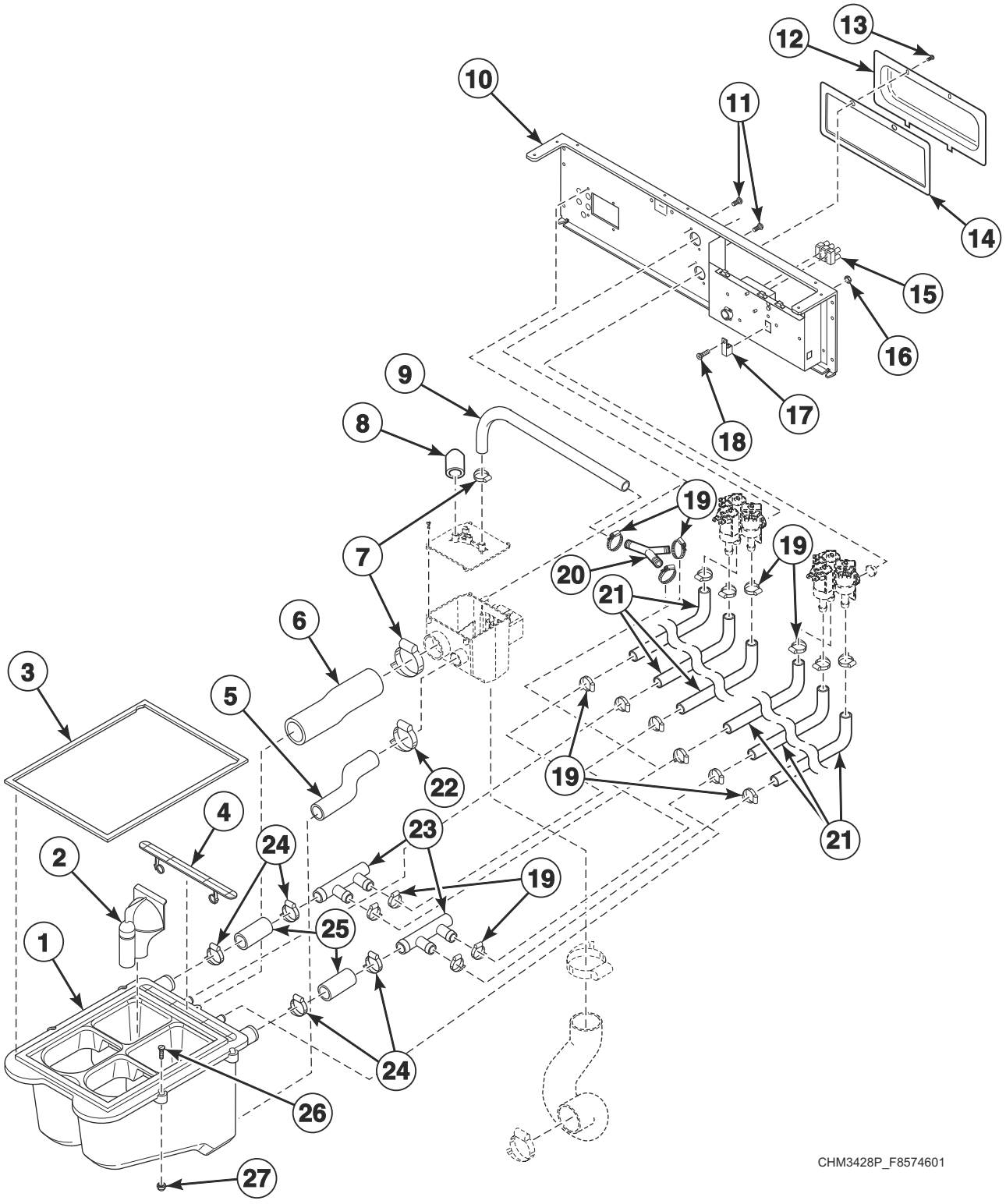

© Copyright, Alliance Laundry Systems LLC – DO NOT COPY or TRANSMIT

Fill Plumbing Assembly (Drawing 1 of 2)

REF	PART NO.	DESCRIPTION	COMMENTS
1	F8047401	Dispenser Assembly	Models through 10/15/12; Includes items 2 and 4
	F8047402	Dispenser Assembly	Models starting 10/16/12; Includes items 2 and 4
2	F8047901	Siphon Cover	
3	F8308301	Dispenser Gasket	
4	F8047801	Access Cover	
5	F8043401	Dispenser Overflow Hose	20 pound models
	F8043403	Dispenser Overflow Hose	30 pound models
	F8043404	Dispenser Overflow Hose	40 pound models
	F8043405	Supply Overflow Hose	60 pound models
6	F8042801	Vacuum Supply Hose	20 pound models
	F8042803	Vacuum Supply Hose	30 pound models
	F8042804	Vacuum Supply Hose	40 pound models
	F8042805	Vacuum Supply Hose	60 pound models
7	F200213	Hose Clamp	No. 40
8	F8197701	Cap	
9	F0200244-01	Vacuum Breaker Hose	60 pound models
	F0200244-02	Vacuum Breaker Hose	All other models
10	F8039901	Valve Panel	20 pound models
	F8017501	Valve Panel	30 pound models
	F8039601	Valve Panel	40 pound models
	F8039801	Valve Panel	60 pound models
11	F8230301	Screw	
12	F8206901	Screw	
13	F8177001	Terminal Tray Cover	
14	F8230001	Terminal Tray Cover Gasket	
15	430642	Terminal Block	Includes screws
16	F430232	Nut	
17	M411283	Ground Lug Connector	
18	F430909	Screw	
19	36801	Hose Clamp	No. 8
20	F422816	Y Connector	
21	F8232004	Hose	20 pound models
	F8232001	Hose	30 pound models
	F8232002	Hose	40 and 60 pound models
22	20211	Hose Clamp	No. 17
23	F8333201	Manifold	
24	F200222	Hose Clamp	No. 12
25	F606816-1	Hose	
26	F8535601	Screw	
27	F0431807-00	Nut	

© Copyright, Alliance Laundry Systems LLC – DO NOT COPY or TRANSMIT

Fill Plumbing Assembly (Drawing 2 of 2)

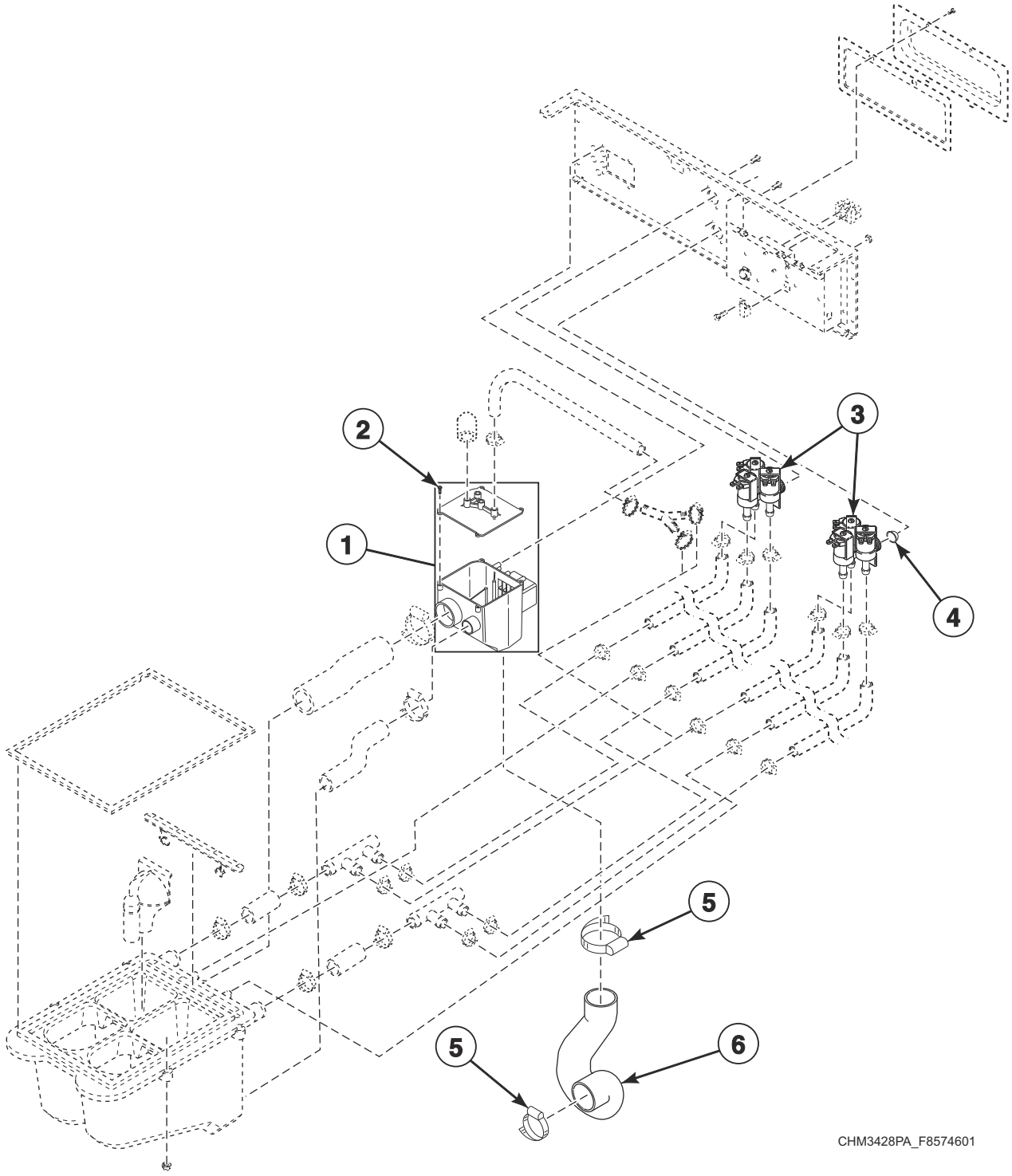

© Copyright, Alliance Laundry Systems LLC – DO NOT COPY or TRANSMIT

Fill Plumbing Assembly (Drawing 2 of 2)

REF	PART NO.	DESCRIPTION	COMMENTS
	G582P3	Diaphragm and Guide Kit	Use with F8286401P 3-Way Valve and F8286402P 3-Way Valve
	F8402201	Regulator	Use with F8286401P 3-Way Valve
1	F8048601	Vacuum Breaker Assembly	
2	800548	Screw	
3	F8286401P	3-Way Valve	240 Volt/50 or 60 Hertz; U.S.
	F8286402P	3-Way Valve	240 Volt/50 or 60 Hertz; Metric
4	803615	Washer	Filter
5	F200213	Hose Clamp	No. 40
6	F8042201	P-Trap Hose	20 pound models
	F8042202	P-Trap Hose	30 and 40 pound models
	F8042301	P-Trap Hose	60 pound models

© Copyright, Alliance Laundry Systems LLC – DO NOT COPY or TRANSMIT

Pulley and Belt

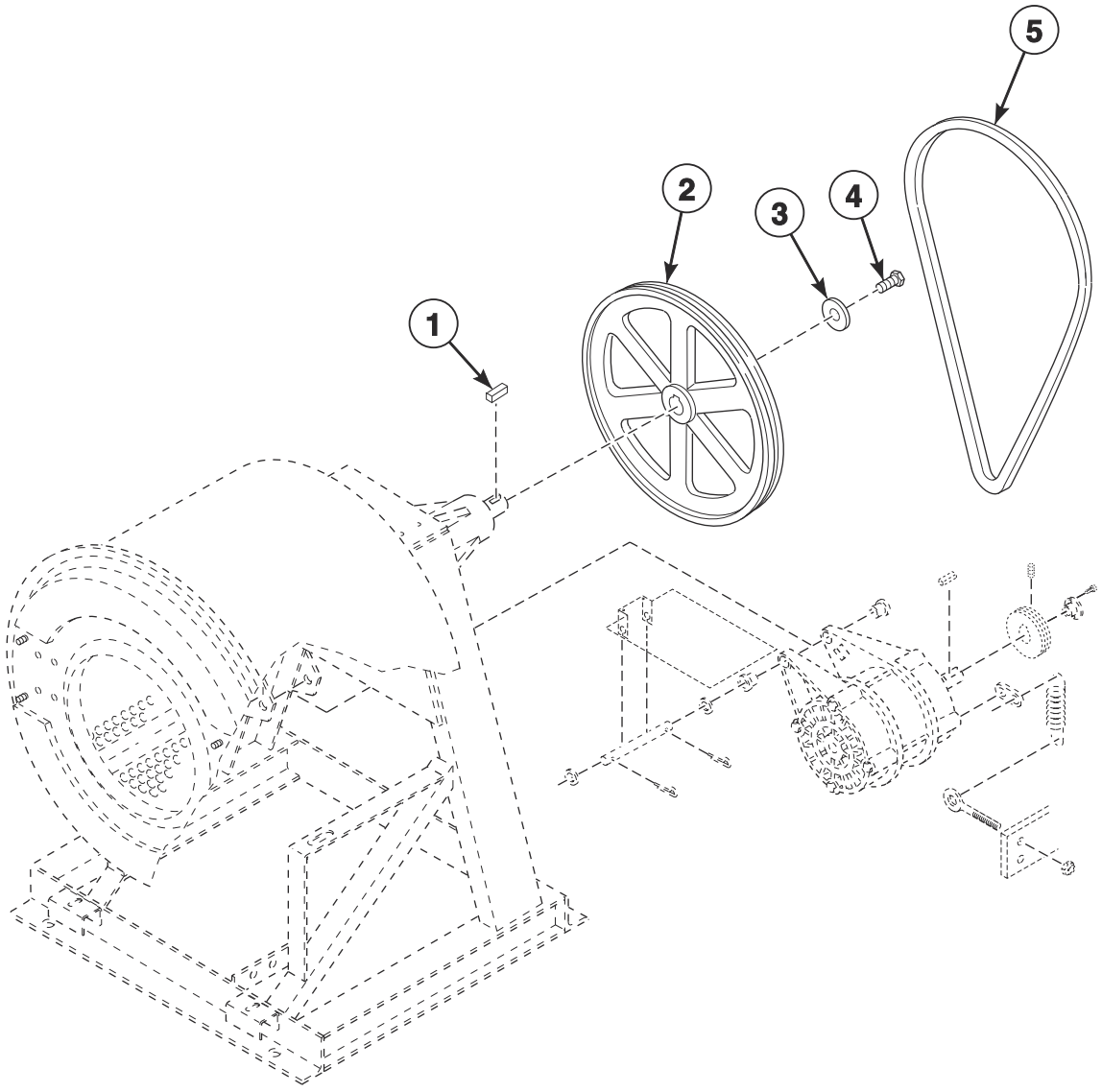

CHM3050P_F8574601

© Copyright, Alliance Laundry Systems LLC – DO NOT COPY or TRANSMIT

Pulley and Belt

REF	PART NO.	DESCRIPTION	COMMENTS
1	F430801	Key	
2	F280168	Pulley	20 pound models; 13V1800
	F280172	Sheave Pulley	30 pound models; 13V2200
	F280197	Pulley	40 pound models; 23V2200
	F200299700	Basket Pulley	60 pound models; X-voltage
	F280173	Pulley	60 pound models; All other voltages; 23V2400
3	F431115	Washer	
4	F430100	Screw	
5	F280343	Belt	3V730; 20 pound 2 speed models; C-voltage
	F280337	Belt	3V710; 20 pound 2 speed models; B, O and Y-voltage
	F8382801	Belt	690J4; 20 pound F and V-speed models; X-voltage
	F280321	Belt	3V800; 30 pound 2 speed models; C, F, O and Y-voltage
	F280368P	Belt	785J4; 30 pound F and V-speed models; X-voltage
	F280341	Belt	3V850; 40 pound 2 speed models; C-voltage
	F280342	Belt	3V830; 40 pound 2 speed models; F, O and Y-voltage
	F280369P	Belt	820J6; 40 pound F and V-speed models; X-voltage
	F280373	Belt	3V90.65; 60 pound 2 speed models; C-voltage
	F280304	Belt	3V900; 60 pound 2 speed models; F, O and Y-voltage
	F280366P	Belt	870J6; 60 pound F and V-speed models; R and X-voltage

© Copyright, Alliance Laundry Systems LLC – DO NOT COPY or TRANSMIT

Motor Pulley and Support

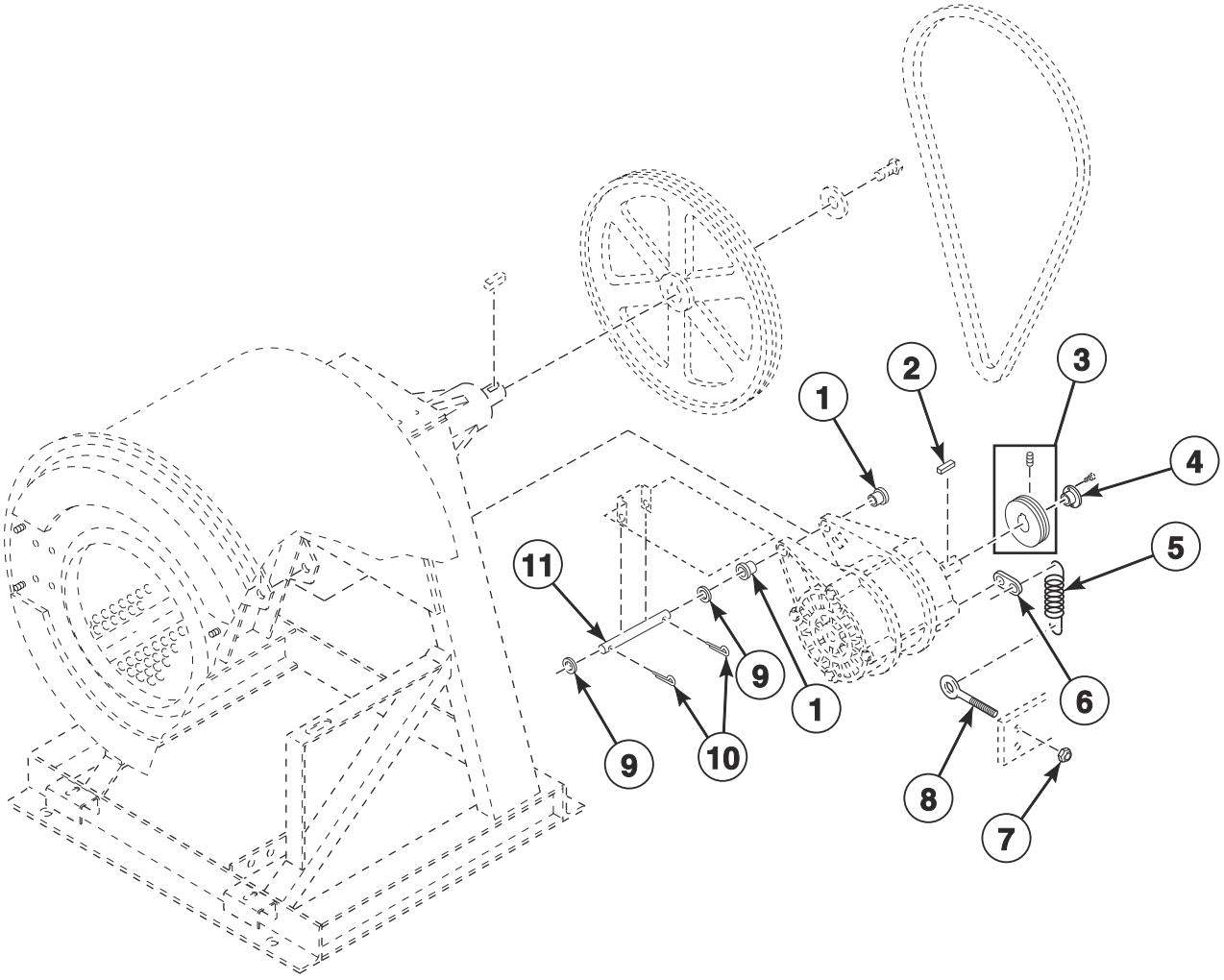

CHM3050PA_F8574601

© Copyright, Alliance Laundry Systems LLC – DO NOT COPY or TRANSMIT

Motor Pulley and Support

REF	PART NO.	DESCRIPTION	COMMENTS
1	F200186100	Motor Support Bushing	
2	F430801	Key	30 pound models
	F430802	Key	All other models
3	F280427P	Pulley	1GR3V3.15JA; Requires JA bushing; 20 pound 2 speed models; C-voltage
	F280170	Sheave Pulley	1GR3V2.65; 20 pound 2 speed models; B, O and Y-voltage
	H87520334	Sheave	1GR3V3.35JA; Requires JA bushing; 30 pound 2 speed models; C-voltage
	F280284	Pulley	1GR3V2.9; 30 pound 2 speed models; F and O-voltage
	F280281	Motor Pulley	1GR3V3.0; 30 pound 2 speed models; Y-voltage
	F280172	Sheave Pulley	1GRV3V22.00; 30 pound 2 speed models; C, F, O and Y-voltage
	F280197	Pulley	2GRV3V22.00; 40 pound 2 speed models; C, F, O and Y-voltage
	F280105P	Pulley	2GR3V3.35SH; Requires SH bushing; 40 pound 2 speed models; C-voltage
	F0280385-00	Sheave	2GR3V3.00; 40 and 60 pound 2 speed models; F, O and Y-voltage
	F280422P	Pulley	2GR3V3.365SH; Requires SH bushing; 60 pound 2 speed models; C-voltage
	F280173	Pulley	60 pound 2 speed models; F and O-voltage
	F280287P	Sheave Kit	F and V-speed models; X-voltage
4	H87529111P	Bushing	JA 5/8; 20 and 30 pound models; C-voltage
	F280298P	Pulley Bushing	JA 7/8; F and V-speed models; Q, R and X-voltage
	M412995P	Bushing	SH 7/8; 40 and 60 pound models; C-voltage
5	F310148	Tension Spring	40 and 60 pound models; X-voltage
	F310124	Extension Spring	40 and 60 pound models except X-voltage; All other models
6	F633374	Spring Clip	
7	F430218	Nut	
8	F430537	Screw	40 and 60 pound models; X-voltage
9	901690	Washer	
10	F430401	Cotter Pin	
11	F602844	Motor Support Rod	20 pound models; 30 pound models except X-voltage
	F603059	Motor Support Rod	30 pound models X-voltage; 40 pound models
	F603897	Motor Support Rod	60 pound models

© Copyright, Alliance Laundry Systems LLC – DO NOT COPY or TRANSMIT

Motor - 20 and 30 Pound Models

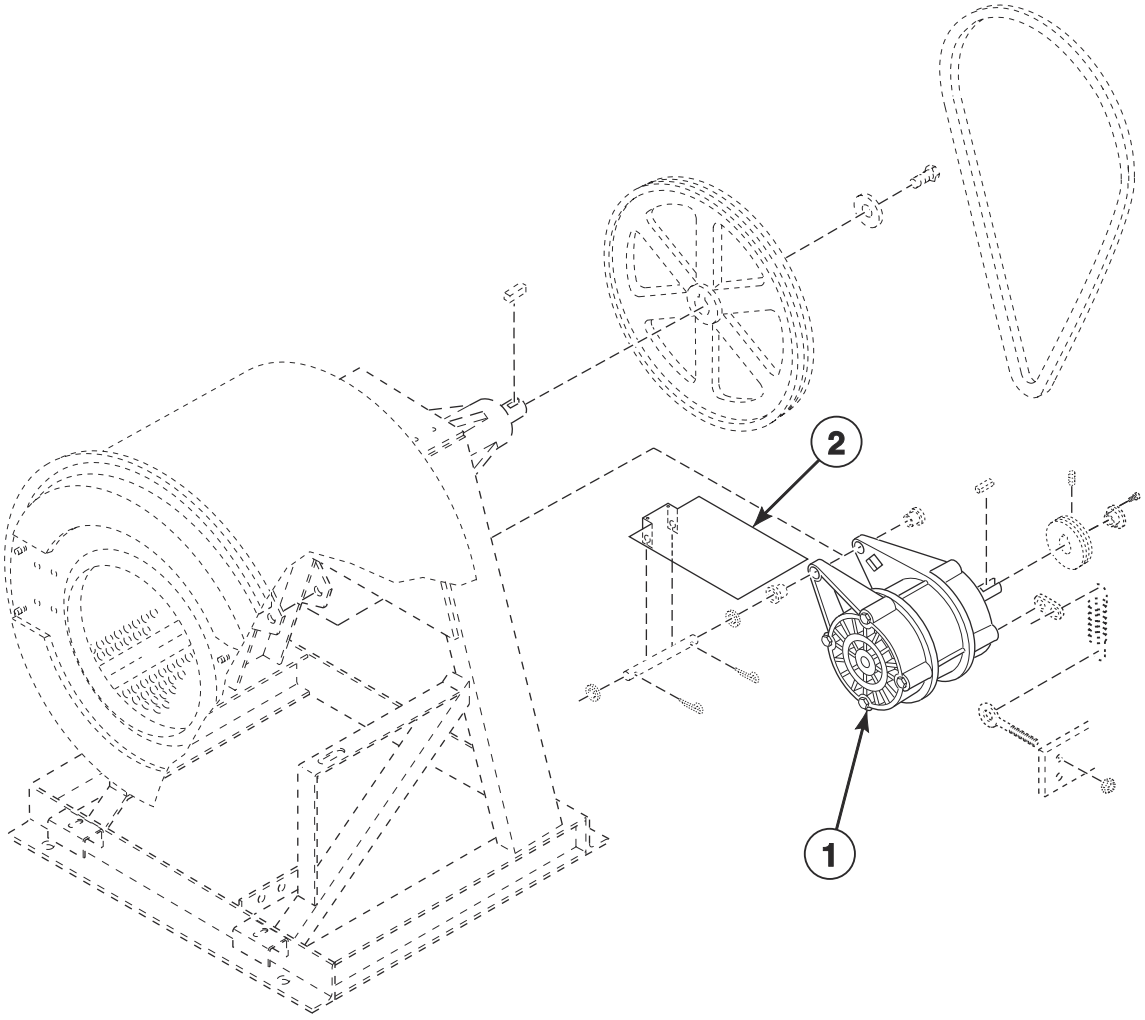

CHM3050PB_F8574601

© Copyright, Alliance Laundry Systems LLC – DO NOT COPY or TRANSMIT

Motor - 20 and 30 Pound Models

REF	PART NO.	DESCRIPTION	COMMENTS
1	F8597402P	Motor	20 pound 2 speed models; Replaces F8329601P and F220110 Motor; B-voltage; Includes motor support bushing
	F8329401P	Motor	20 pound 2 speed models; Replaces F022032500P and F220325-H Motors; C and F-voltage; Includes motor support bushing
	F8329301P	Motor	20 pound 2 speed models; Replaces F022039600 and F220396-H Motors; J, K and O-voltage; Includes motor support bushing
	F8411501	Motor Conversion Kit	20 pound 2 speed models; Replaces F022012800P Motor and F8597401 Motor; Y-voltage
	F8328901P	Motor Conversion Kit	20 pound F and V-speed models; Replaces F220393 Motor; X-voltage; Includes motor support bushing; **
	F022012800P	Motor	Use with F220128-H Motor; 20 pound 2 speed models; Y-voltage; Includes F200186100 Motor Support Bushing replaced by F8329501P Motor
	F8597104P	Motor	30 pound 2 speed models; Replaces F022038800 and F220388-H Motors; C and F-voltage; Includes motor support bushing
	F8597103P	Motor	30 pound 2 speed models; Replaces F022038700 and F220387-H Motors; J, K and O-voltage; Includes motor support bushing
	F8329001P	Motor Conversion Kit	30 pound F and V-speed models; Replaces F220395 Motor; X-voltage; Includes motor support bushing; **
	F8597501P	Motor	30 pound 2 speed models; Replaces F8597501, F022012400 and F220124-H Motors; Y-voltage; Includes motor support bushing
2	F200216900	Motor Drip Shield	2 speed models

**** NOTE: AC drive parameters must be compatible with the motor and motor pulley. Please request the AC drive parameter illustration for parameter verification when ordering a motor.**

© Copyright, Alliance Laundry Systems LLC – DO NOT COPY or TRANSMIT

Motor - 40 and 60 Pound Models

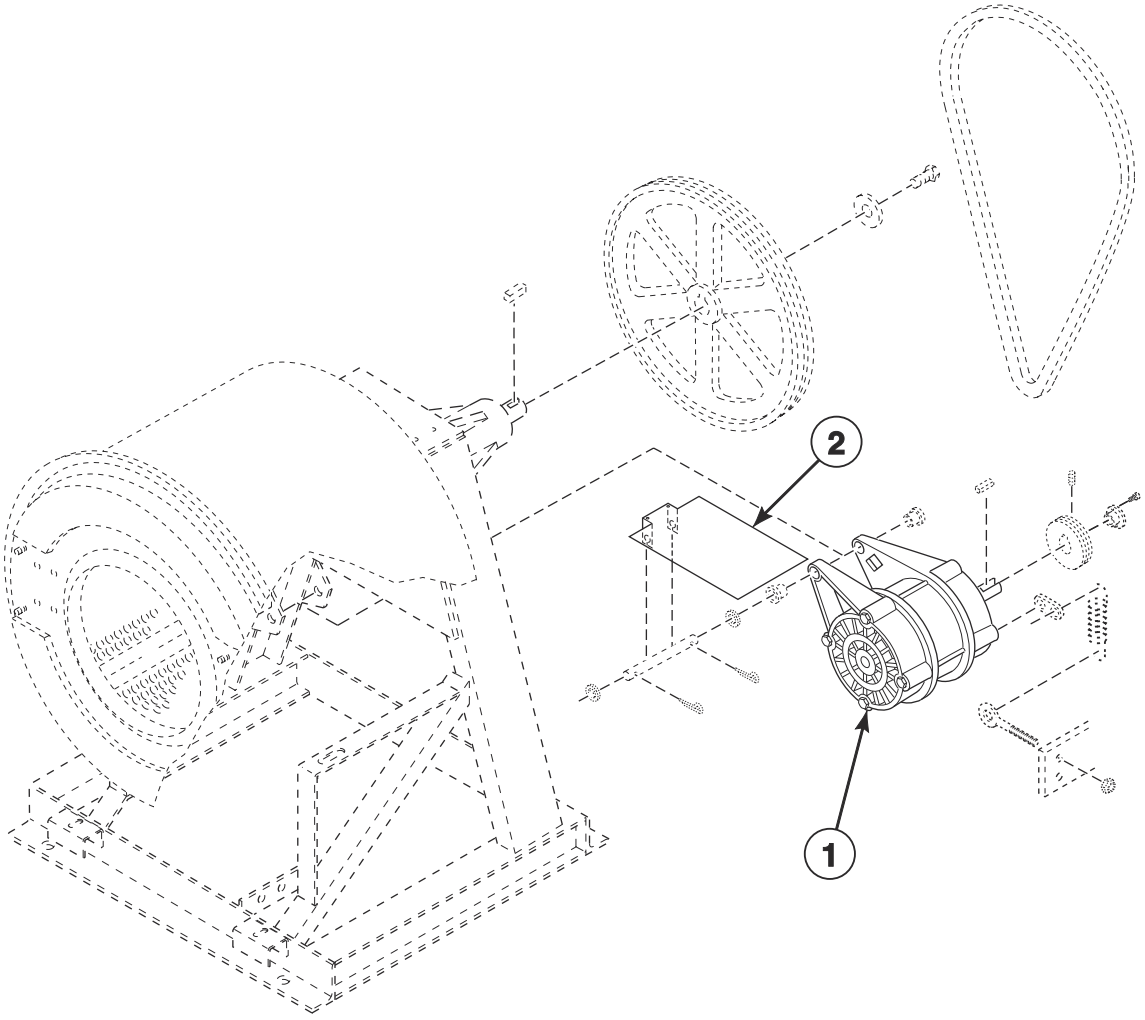

CHM3050PB_F8574601

© Copyright, Alliance Laundry Systems LLC – DO NOT COPY or TRANSMIT

Motor - 40 and 60 Pound Models

REF	PART NO.	DESCRIPTION	COMMENTS
1	F8597802P	Motor	40 pound 2 speed models; Replaces F8597802P, F022032600 and F220326-H Motors; C and F-voltage; Includes motor support bushing
	F8597801P	Motor	40 pound 2 speed models; Replaces F0220321-00 Motor on models through 7/25/10; All other models starting 7/26/10; O-voltage; Includes motor support bushing; Replaces F8597801 Motor
	F8597502P	Motor	40 pound 2 speed models; Replaces F0220120-01P Motor on models through 12/31/10; All other models starting 1/1/11; Y-voltage; Includes motor support bushing; Replaces F8330201 and F8330201P Motor
	F8329101P	Motor Conversion Kit	40 pound F and V-speed models; Replaces F220394 Motor; X-voltage; Includes motor support bushing; **
	F8597803P	Motor	60 pound 2 speed models; Replaces F8330301P and F022032200 Motor; O-voltage; Includes motor support bushing
	F8597804P	Motor	60 pound 2 speed models; C-voltage; Includes motor support bushing
	F8329201P	Motor Conversion Kit	60 pound F and V-speed models; Replaces F220234 Motor; X-voltage; Includes motor support bushing; **
2	F200216900	Motor Drip Shield	40 pound 2 speed models except Y-voltage; 60 pound F and V-speed models
	F200280700	Motor Drip Shield	40 pound models Y-voltage; 60 pound 2 speed models

**** NOTE: AC drive parameters must be compatible with the motor and motor pulley. Please request the AC drive parameter illustration for parameter verification when ordering a motor.**

© Copyright, Alliance Laundry Systems LLC – DO NOT COPY or TRANSMIT

Electric Heat Option

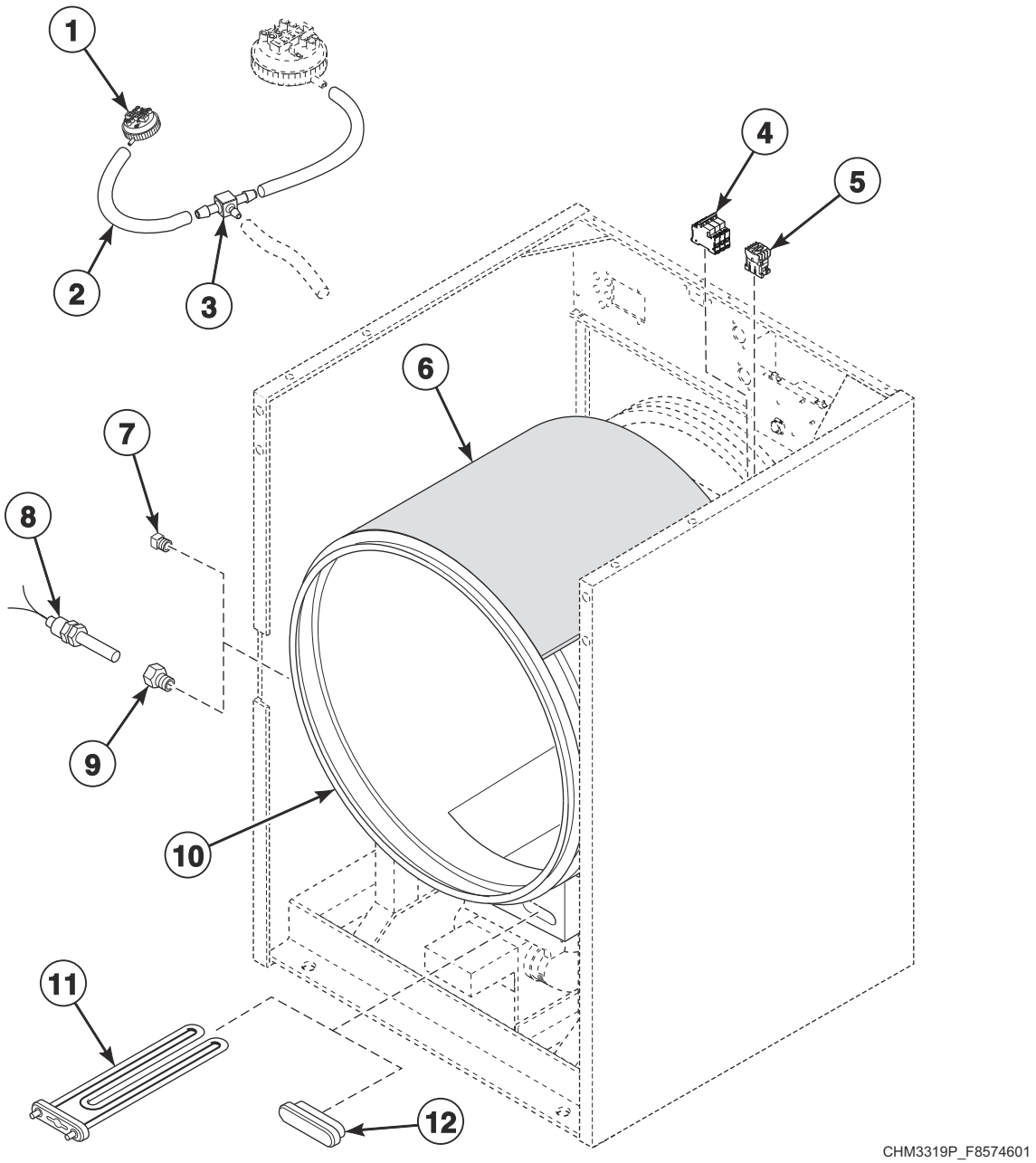

© Copyright, Alliance Laundry Systems LLC – DO NOT COPY or TRANSMIT

Electric Heat Option

REF	PART NO.	DESCRIPTION	COMMENTS
	F8056001	Jumper Wire	P-voltage models require 5; N-voltage models require 3
1	F8223001P	Water Pressure Switch	Heat safety
2	F8153901	Tubing	
3	F8246601	Tee	
4	70256901P	Circuit Breaker	
5	F330188P	Contactor	
6	F410300	Pipe Insulation	
7	F421507	Plug	
8	F370609	Thermistor Sensor	
9	F421936	Reducer Bushing	
10	F8179202	Shell Weldment	20 pound models
	F8179302	Shell Weldment	30 pound models
	F8179402	Shell Weldment	40 pound models
	F8179502	Shell Weldment	60 pound models
11	F360205P	Element	2.6 kW; 3 used in 20 and 30 pound models; 6 used in 40 and 60 pound models
12	F360202	Heating Element Plug	

© Copyright, Alliance Laundry Systems LLC – DO NOT COPY or TRANSMIT

Steam Heat Option

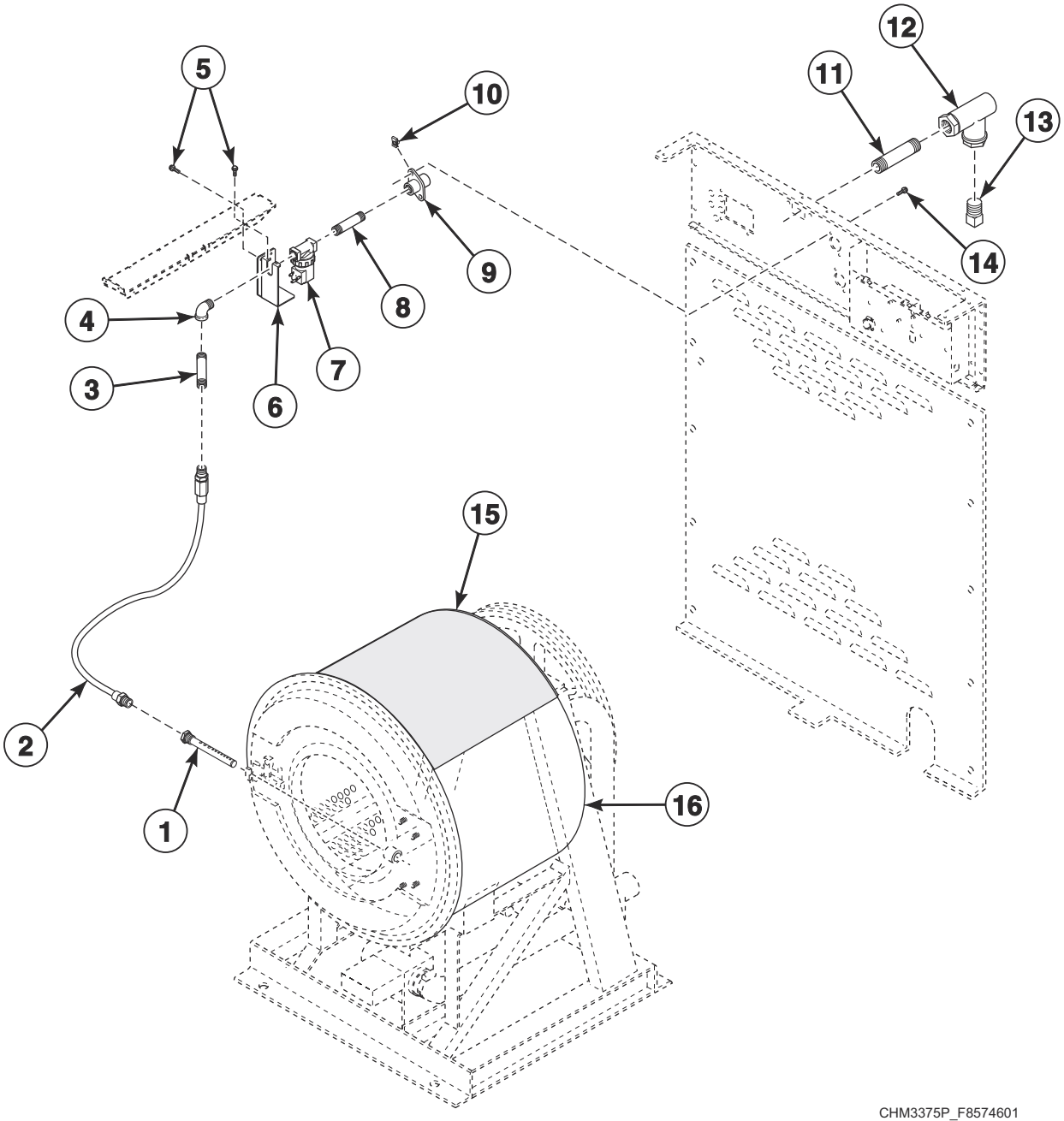

© Copyright, Alliance Laundry Systems LLC – DO NOT COPY or TRANSMIT

Steam Heat Option

REF	PART NO.	DESCRIPTION	COMMENTS
	F953P3	Steam Heat Kit	Includes items 1, 2, 4, 6-9, 11-15, F8116301 Coupling, F8362701 Coupling, 70139601 Pipe Nipple, F421703 Street Elbow, F8115601 Cord Din Set Assembly, hardware and labels
	F380984P	Steam Valve Repair Kit	Use with item 5
	F8514601P	Coil	Use with F8322801 Valve
	F8382301	DIN Valve Adapter Kit	Use with F8322801 Valve
	F8379501P	Valve Kit	Use with F8322801 Valve
1	F8368201	Steam Injector Tube Assembly	
2	F200197	Steam Hose	
3	F8110601	Nipple	60 pound models
4	H86070034	Street Elbow	
5	430497	Screw	
6	F8490301	Steam Bracket	
7	F8322801P	Valve	Replaces F380787P Steam Valve; Includes F8514601 Coil; For models that have been upgraded with F8521801 Din Valve Kit
	F8521501	DIN Valve Kit	Replaces F380787P Steam Valve; Includes F8322801 Valve, F8382301 DIN Valve Adapter Kit and F8514601 Coil
8	70263801	Pipe Nipple	
9	F8154501	Coupling	
10	70030401	Nut	
11	431486	Pipe Nipple	
12	F270307	Steam Filter	
13	F420409	Plug	
14	20253	Screw	
15	F410300	Pipe Insulation	
16	F8179202	Shell Weldment	20 pound models
	F8179302	Shell Weldment	30 pound models
	F8179402	Shell Weldment	40 pound models
	F8179502	Shell Weldment	60 pound models

© Copyright, Alliance Laundry Systems LLC – DO NOT COPY or TRANSMIT

Notes

© Copyright, Alliance Laundry Systems LLC – DO NOT COPY or TRANSMIT

Parts Index

A

Access Cover
F8047801 53

Air Trap Hose
F020014200 ..... 11, 13, 15, 17

Auxiliary Control Assembly
F8189401P 11, 13, 15, 17

B

Basket Assembly
F8347901P 39
F8391302 39
F8391702 39
F8502802 39

Basket Puller Tool
F460129P 39

Basket Pulley
F200299700 57

Basket Rental Tool Kit
390P4-1 39

Basket Tool Kit
389P4 39

Bearing
F100108 41
F100123P 41
F100134 41
F100135 41
F100136P 41
F100137P 41

Bearing Sleeve
F8221701 35

Belt
F280304 57
F280321 57
F280337 57
F280341 57
F280342 57
F280343 57
F280366P 57
F280368P 57
F280369P 57
F280373 57
F8382801 57

Blind Rivet
F8245101 35

Bolt
F430974 35
F8230501 33
F8270701 37
F8508101 35

Bushing
H87529111P 59
M412995P 59

C

Cap
F8197701 53

Capacitor
F370218P 11, 15
F370220 ..... 11, 15
F370221 ..... 11, 15
F8411701 ..... 11, 15
F8411801 ..... 11, 15
F8411901 ..... 11, 15

Capacitor Tray Assembly
F8199601 ..... 11, 15
F8199901 ..... 11, 15

Card Plate Assembly
F8201501 27

Card Reader Overlay
70334301 27

Circuit Breaker
70256901P 65

Clamp Ring Assembly
F8388002 39

Coil
F8514601P 67

Coin Box
F160672 25

Coin Chute
F8170801 ..... 15, 17

Coin Drawer Assembly
F8182001 25

Coin Drop
70256402P 21
70441601P 19

Coin Drop Assembly
210195 21
210196 21
38462P 19
38463 19
38464P 19
38472 21
38521 21
39157 21
70281102 21
70482401 23

Coin Drop Kit
CK122 23

Coin Identification Paper
38725 ..... 19, 21, 23

Coin Meter
F0160737-00 21

Coin Meter Assembly
F200010000P 19
F200010001 21
F200010002 21
F200010003 21
F200010004 21
F200010005P 21
F200010006 19
F200010007 19
F200010008 21
F200010009 19

N/A items do not appear in index.

© Copyright, Alliance Laundry Systems LLC – DO NOT COPY or TRANSMIT

F200010010 21
F200010011 19
F200010012 19
F200021600P 23

Coin Vault Assembly
F8182501 ..... 15, 17
F8182601 ..... 15, 17

Conrol Tray Harness
F8261501P 13, 17

Contact
F8069502 ..... 11, 13

Contact Base
F8538101 ..... 11, 13

Contact Block Switch
F200233401P 11, 13

Contactor
F330177P 11, 15
F330188P 65

Contactor Tray Assembly
F8343401 ..... 11, 15

Control Kit
F983P3 ..... 11, 13
F987P3 ..... 15, 17
F990P3 ..... 15, 17
F991P3 17

Control Panel Assembly
F8038502 29
F8038504 31
F8038602 29
F8038604 31
F8038702 29
F8038704 31
F8038802 29
F8038804 31

Control Panel Overlay
F8226301 31
F8226401 31
F8226501 31
F8226601 31
F8295501 29
F8295502 29
F8295601 29
F8295602 29
F8295701 29
F8295702 29
F8295801 29
F8295802 29
F8296001 31
F8296101 31
F8296201 31
F8296301 31

Control Tray Assembly
F8205901 11
F8205902 ..... 13, 15, 17
F8205903 ..... 13, 15, 17

Cotter Pin
F430401 59

Coupling
F8154501 67

D

Diaphragm and Guide Kit
G582P3 55

DIN Rail
F8200101 ..... 11, 15

DIN Valve Adapter Kit
F8382301 67

DIN Valve Kit
F8521501 67

Dispenser Assembly
F8047401 53
F8047402 53

Dispenser Gasket
F8308301 53

Dispenser Lid
F8048101 33

Dispenser Overflow Hose
F8043401 53
F8043403 53
F8043404 53

Door
F0602431-02 35
F0602837-02 35
F602842-2 35
F8507501P 35
F8752601 35
F8752701 35

Door Assembly
F8187203 35
F8187303 35
F8187403 35
F8617201 35
F8617301 35
F8617411 35

Door Bezel
F170416-2 ..... 29, 31
F8658701 ..... 29, 31
F8658801 ..... 29, 31
F8658901 ..... 29, 31
F8659101 ..... 29, 31

Door Gasket
F200000202 35
F8111502 35
F8111602 35

Door Glass
F8485301P 35
F8485305 35
F8485401P 35
F8485405 35
F8675701P 35

Door Glass Kit
F290205P 35

Door Handle
F8199401P 35
F8199501 35

Door Handle Spacer Kit
F8567501 35

Door Hinge
F190216P 35

Door Hinge Shim Kit
F200131000P 35

Door Latch Arm Assembly
F8221403 35

Door Lock Assembly
F8632401 37

Door Lock Assembly Kit
F8626501 37

N/A items do not appear in index.

© Copyright, Alliance Laundry Systems LLC – DO NOT COPY or TRANSMIT

Door Lock Catch
F8223601 37
F8344501 37
Door Lock Cover
F8245001 37
Door Lock Microswitch
F200203200 37
Door Lock Plate Assembly
F8223202 37
Door Lock Plate Shim
F8059701 37
F8344401 37
Door Lock Solenoid Replacement Kit
F977P3 37
Door Lock Splash Shield
F320200 37
Door Lock Switch Lever
F8223401 37
Door Mount
F150271 35
Door Shim
F8453401 37
Drain Connector Tee
F8017101 45
Drain Hose
F8231901 45
F8231902 45
F8232901 45
F8233001 45
F8233101 45
F8233102 45
Drain Tee
F8752101 45
Drain Valve
F8406303 49
F8602601 49
803293P 47
Drain Valve Cover
F200133600 ..... 47, 49

E

Earth Terminal Sticker
M412096 9
Electric Shock Danger Label
F8115501 9
Electronic Coin Drop Assembly
70294103P 23
70294104 23
70294107 23
70294109 23
70294111 23
70294119 23
70294120 23
70294121 23
70513306 23
70513311 23
Electronic Coin Drop Kit
CK099 23
CK100 23
CK101 23
CK103 23
CK106 23
CK109 23
CK110 23
CK113 23
CK115 23
CK119 23
CK120 23
CK121 23
CK500 23
Element
F360205P 65
Emergency Stop Harness
F8060501 ..... 11, 13
Emergency Stop Plate
F8201301 ..... 11, 13
Emergency Stop Pushbutton
F200233500 ..... 11, 13
EMI Filter
F8053901P 13, 17
F8053902 ..... 13, 17
Excluder Seal
F8336801 39
F8336901 39
F8337001 39
F8337101 39
Expansion Clip
70030501 ..... 11, 13, 15, 17, 29, 31, 33
Extension Spring
F310124 59
External Door Lock Harness
F8340001 37
External Supply Connection Decal
F8150201 9
External Supply Harness
F8191201P 11, 13, 15, 17
F8191203P 15, 17
External Supply Kit
F937P3 ..... 11, 13, 15, 17

F

Fill Hose
F200116 51
Fill Hose Kit
F8544601 51
Frame Weldment
F8195901 43
F8196001 43
F8196101 43
F8199101 43
Front Cabinet Brace
F8173801 ..... 29, 31
F8173901 ..... 29, 31
F8174001 ..... 29, 31
Front End Control Kit
F986P3 17
F988P3 13
Front Panel
F8171301 29
F8171302P 31
F8173001 29
F8173002P 31
F8173101P 29
F8173102P 31
F8173201P 29
F8173202P 31

N/A items do not appear in index.

© Copyright, Alliance Laundry Systems LLC – DO NOT COPY or TRANSMIT

Fuse
802493 ..... 11, 13, 15, 17

G

Gravity Drain Valve
803292P 47
Ground Decal
F230739 9
Ground Lug Connector
M411283 53
Gusset Plate
F8186701 31
F8186702 ..... 29, 31

H

Heating Element Plug
F360202 65
Hose
F606816-1 53
F8232001 53
F8232002 53
F8232004 53
Hose Barb Connector
F8431001 ..... 11, 15, 17
Hose Clamp
F200201 45
F200213 ..... 45, 53, 55
F200215 45
F200222 ..... 11, 13, 15, 17, 53
20211 53
36801 53
Hot Surface Warning Label
F8614301 9

I

Interlock Contactor
F330186P 11, 15

J

Jumper Configuration Assembly
M413507 ..... 11, 13, 15, 17
Jumper Harness Assembly
M413506 ..... 11, 13, 15, 17
Jumper Wire
F8056001 65

K

Key
F160420 25
F430801 ..... 57, 59
F430802 59
70155603 33

L

Left Side Panel
F8042902P 33
F8043102P 33
F8043202P 33
F8043302P 33
Lid Clamp
F8091701 33
Lower Cabinet Brace
F8174101 ..... 29, 31

M

Machine Size Configuration Harness
F8028101P 11, 13, 15, 17
F8028103P 11, 13, 15, 17
F8028104P 11, 13, 15, 17
F8028105P 11, 13, 15, 17
Magnet
F8390801 35
Manifold
F8333201 53
Motor
F022012800P 61
F8329301P 61
F8329401P 61
F8597103P 61
F8597104P 61
F8597402P 61
F8597501P 61
F8597502P 63
F8597801P 63
F8597802P 63
F8597803P 63
F8597804P 63
Motor Conversion Kit
F8328901P 61
F8329001P 61
F8329101P 63
F8329201P 63
F8411501 61
Motor Drip Shield
F200216900 ..... 61, 63
F200280700 63
Motor Pulley
F280281 59
Motor Support Bushing
F200186100 59
Motor Support Rod
F602844 59
F603059 59
F603897 59
Motor Switch
F340002 ..... 11, 15
Mount on Concrete Warning Label
F8246401 9
Mounting Plate
70208801 27

N/A items do not appear in index.

© Copyright, Alliance Laundry Systems LLC – DO NOT COPY or TRANSMIT

N

Nipple
F8110601 67

Nut
F0431807-00 53
F430215 ..... 35, 39, 45
F430218 ..... 43, 59
F430225 37
F430232 ..... 11, 13, 15, 17, 35, 37, 53
F430239 41
F430240 41
F430264 37
F431017 ..... 11, 13
F431022 35
F431041 35
24205 ..... 11, 13
685846 ..... 19, 21, 23
70030401 67

O

Opto Coupler
200674P 19, 21

Output Control Assembly Kit
F980P3 ..... 11, 13, 15, 17

Output/Logic Harness
F8028701 ..... 11, 13, 15, 17

Overflow Hose
F0200238-00 45
F150308 45
F150417 45
F8337701 45

Overlay
F8295503 31
F8295603 31
F8295703 31
F8295803 31
70295101 23
70295301 23

Overload Contactor
F8176101P 11, 15

P

Panel Lock
44089303P 33

Pipe Insulation
F410300 ..... 65, 67

Pipe Nipple
431486 67
70263801 67

Plug
F420409 67
F421507 65

Pop Rivet
F431223 35
70058501 ..... 11, 15, 17, 19, 21

PowerFlex 40 Drive
F8169401 ..... 13, 17
F8169402 ..... 13, 17
F8169403 ..... 13, 17
F8169404 ..... 13, 17
F8169405 ..... 13, 17
F8169406 ..... 13, 17
F8169407 ..... 13, 17
F8169408 ..... 13, 17
F8169434 ..... 13, 17
F8169435 ..... 13, 17
F8169436 ..... 13, 17
F8169437 ..... 13, 17
F8169438 ..... 13, 17
F8169439 ..... 13, 17
F8169440 ..... 13, 17
F8169441 ..... 13, 17

Pressfit Upgrade Kit
F935P3 39
F936P3 39
F938P3 39
F939P3 39

P-Trap Hose
F8042201 55
F8042202 55
F8042301 55

Pulley
F280105P 59
F280168 57
F280173 ..... 57, 59
F280197 ..... 57, 59
F280284 59
F280422P 59
F280427P 59

Pulley Bushing
F280298P 59

Pulse Expander Assembly
F8034701P 23

Pushbutton Switch
70413301 33

R

Rear Panel
F8176201P 33
F8176301 33
F8177501P 33
F8177701P 33

Reducer Bushing
F421936 65

Reed Switch Assembly
F8066802 35

Regulator
F8402201 55

Retaining Ring
F8337801 41
F8337901 41
F8344901 41
F8345001 41

Right Side Panel
F8042901P 33
F8043101P 33
F8043201P 33
F8043301P 33

Rod
F602813-2 35
F602813-3 35

N/A items do not appear in index.

© Copyright, Alliance Laundry Systems LLC – DO NOT COPY or TRANSMIT

S

Screw
F430100 57
F430107 45
F430174 ..... 29, 31, 33
F430518 39
F430532 35
F430536 35
F430537 59
F430903 ..... 11, 13, 15, 17
F430909 53
F430942 43
F430949 43
F430956 37
F430977 37
F8117601 ..... 29, 31
F8206901 ..... 11, 13, 15, 17, 33, 53
F8230301 53
F8230601 33
F8442702 43
F8535501 35
F8535601 53
20253 67
430497 67
800548 55
801019 29

Shaft Seal Sleeve
F8312001P 39
F8312004P 39
F8312006P 39
F8343914 39

Shaft Seal Sleeve Kit
F8343901P 39
F8343904P 39
F8343906P 39
F8343909P 39

Sheave
F0280385-00 59
H87520334 59

Sheave Kit
F280287P 59

Sheave Pulley
F280170 59
F280172 ..... 57, 59

Shell Band Kit
F8537801 39
F8537803 39
F8537804 39

Shell Front Assembly
F8229401 39
F8229501 39
F8229601 39
F8229701 39

Shell Front Gasket Kit
F8513501 39

Shell Weldment
F8179201 43
F8179202 ..... 43, 65, 67
F8179203 43
F8179301 43
F8179302 ..... 43, 65, 67
F8179303 43
F8179401 43
F8179402 ..... 43, 65, 67
F8179403 43
F8179501 43
F8179502 43
F8179503 43

Siphon Cover
F8047901 53

Snap Bushing
44071501 ..... 11, 13, 15, 17

Spacer
F431901 37

Spring
F8504601 47
F8504701 49

Spring Clip
F633374 59

Spring Pin
F431222 35

Steam Bracket
F8490301 67

Steam Filter
F270307 ..... 51, 67
F270308 51

Steam Heat Kit
F953P3 67

Steam Hose
F200197 67

Steam Injector Tube Assembly
F8368201 67

Steam Valve Repair Kit
F380984P 67

Street Elbow
H86070034 67

Supply Overflow Hose
F8043405 53

Support Bracket
F8195803 ..... 13, 17

Switch Clamp
F0340722-00 ..... 11, 15

T

Tee
F8246601 ..... 11, 13, 15, 17, 65

Temperature Configuration Harness
F8028219P 13, 15, 17

Tension Spring
F310148 59

Terminal Block
430642 53

Terminal Tray Cover
F8177001 53

Terminal Tray Cover Gasket
F8230001 53

Thermistor Sensor
F370609 65

Top Cabinet Brace
F8043501 33
F8043701 33
F8043801 33
F8043901 33

Top Cover
F8017401 33
F8040201 33
F8040301 33

N/A items do not appear in index.

© Copyright, Alliance Laundry Systems LLC – DO NOT COPY or TRANSMIT

F8040401P 33
Top Cover Hinge
F8258601 33
Top Cover Latch
F8201001 ..... 29, 31
Torsion/Door Lock Spring
F8070301 37
Transformer
F360157P 11, 13, 15, 17
201616P 11, 13, 15, 17
210019P 11
803527P 13, 15, 17
Triple Lip Seal
F8203801 41
F8203802 41
F8203803 41
F8203806 41
Trunnion Kit
F747001 41
F747002 41
F747003 41
F747005 41
Tubing
F8153901 ..... 11, 13, 15, 17, 65

U

USB IR Interface Kit
203346 ..... 11, 13, 15, 17
Use Copper Conductors Only Caution Label
F8242201 9

V

Vacuum Breaker Assembly
F8048601 55
Vacuum Breaker Hose
F0200244-01 53
F0200244-02 53
Vacuum Supply Hose
F8042801 53
F8042803 53
F8042804 53
F8042805 53
Valve
F8322801P 67
Valve Kit
F8379501P 67
Valve Panel
F8017501 53
F8039601 53
F8039801 53
F8039901 53
Valve, 3-Way
F8286401P 55
F8286402P 55

W

Warning Label
F8207901 9
F8233501 9
44324001 9
Washer
F430303 43
F430317 ..... 39, 45
F431113 35
F431115 57
F431128 ..... 41, 43
F431131 ..... 41, 43
F431902 37
F431916 35
F431929 35
M400081 43
803615 ..... 51, 55
901690 59
Water Hose
F200108P 51
Water Pressure Switch
F8223001P 11, 13, 15, 17, 65

Y

Y Connector
F422816 53

N/A items do not appear in index.

© Copyright, Alliance Laundry Systems LLC – DO NOT COPY or TRANSMIT

Notes

© Copyright, Alliance Laundry Systems LLC – DO NOT COPY or TRANSMIT