Washer-Extractor

Cabinet Hardmount

Design 4, 6, 7 and 8

Refer to Page 5 for Model Numbers

Parts

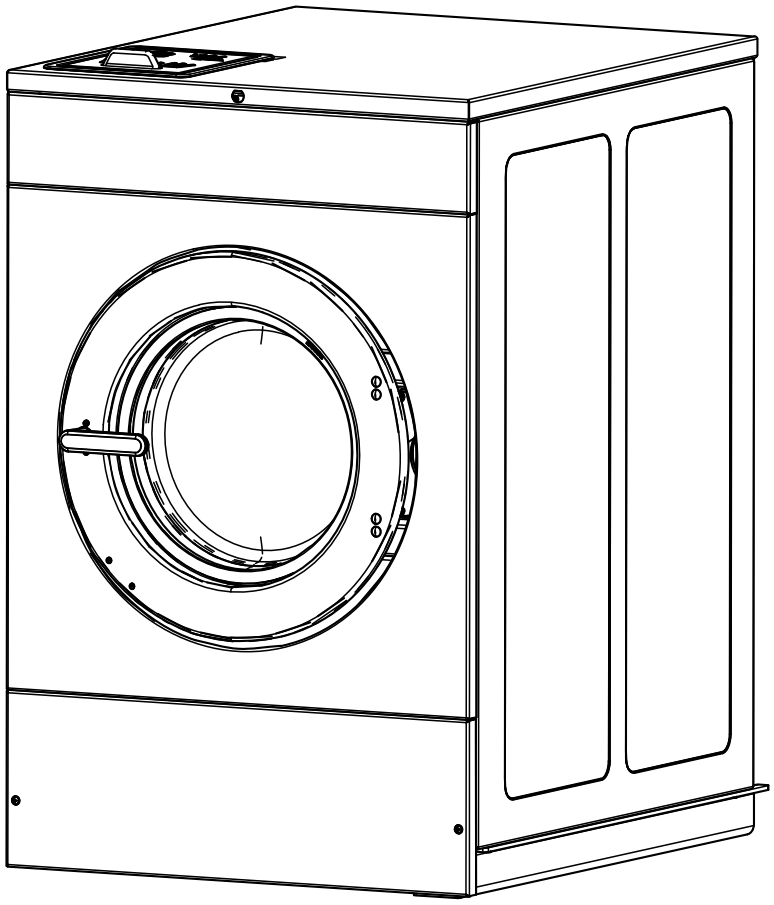

C-CHM2C3_F8668901

Alliance™ Laundry Systems

www.alliancelaundry.com

Part No. F8668901R8
Ocotober 2025

Table of Contents

Title	Page
Parts Ordering Information	3
Serial Plate Location	3
Model Identification	5
Product Overview - Galaxy 600 International	6
Labels	8
Control Module and Front Tray Assembly	10
Control Tray Assembly	12
Flush Mount Coin Meter Assembly - Single Drop	14
Flush Mount Coin Meter Assembly - Dual Drop	16
Electronic Coin Meter Assembly	18
Optional Coin Box	20
Inverter Drive Box - 20 and 30 Pound Models with B Voltage (Drawing 1 of 2)	22
Inverter Drive Box - 20 and 30 Pound Models with B Voltage (Drawing 2 of 2)	24
Inverter Drive Box - 20 and 30 Pound Models with N, P, Q, W, X and Y Voltage	26
Inverter Drive Box - 20 and 30 Pound Models with Q and X Voltage	28
Inverter Drive Box - 40 Pound Models with B Voltage (Drawing 1 of 2)	30
Inverter Drive Box - 40 Pound Models with B Voltage (Drawing 2 of 2)	32
Inverter Drive Box - 40 Pound Models with N, P, Q, W, X and Y Voltage	34
Inverter Drive Box - 40 Pound Models with Q and X Voltage	36
Inverter Drive Box - 60 Pound Models with Q and X Voltage (Drawing 1 of 2)	38
Inverter Drive Box - 60 Pound Models with Q and X Voltage (Drawing 2 of 2)	40
Inverter Drive Box - 60 Pound Models with N and P Voltage	42
Inverter Drive Box - N and P Voltage	44
External Supply Kit (Drawing 1 of 2)	46
External Supply Kit (Drawing 2 of 2)	48
Inverter Drive (Drawing 1 of 2)	50
Inverter Drive (Drawing 2 of 2)	52
Front Panels and Control Panel - Design 4	54
Front Panels and Control Panel - Design 6	56
Front Panels and Control Panel - Design 7 and 8	58
Rear and Top Panels	60
Side Panels	62
Door - 20 Pound Models - Design 4	64
Door - 20 Pound Models - Design 6, 7 and 8	66
Door - 30 Pound Models - Design 4	68
Door - 30 Pound Models - Design 6, 7 and 8	70
Door - 40 and 60 Pound Models - Design 4	72
Door - 40 and 60 Pound Models - Design 6, 7 and 8	74
Door Lock	76
Shell Front, Basket, Shell and Frame Template - 20 and 30 Pound Models	78
Shell Front, Basket, Shell and Frame Template - 40 and 60 Pound Models	80

© Copyright 2025, Alliance Laundry Systems LLC

All rights reserved. No part of the contents of this book may be reproduced or transmitted in any form or by any means without the expressed written consent of the publisher.

Bearing Housing 82
Drain Plumbing 84
Pump Drain Plumbing - 20, 30 and 40 Pound Models 86
Fill Plumbing - 20 Pound Models 88
Fill Plumbing - 30 Pound Models 90
Fill Plumbing - 40 Pound Models 92
Fill Plumbing - 60 Pound Models 94
Motor, Pulley and Belt - 20 and 30 Pound Models 96
Motor, Pulley and Belt - 40 and 60 Pound Models 98
Electric Heating 100
Steam Heating - 40 and 60 Pound Models 102
Special Tools and Kits 104
Parts Index 107

© Copyright, Alliance Laundry Systems LLC – DO NOT COPY or TRANSMIT

Parts Ordering Information

If literature or replacement parts are required, contact the source from whom the machine was purchased or contact Alliance Laundry Systems at (920) 748-3121 for the name and address of the nearest authorized parts distributor.

For technical assistance, call the number listed below:

(920) 748-3121 Ripon, Wisconsin

Serial Plate Location

When calling or writing about your product, be sure to mention model and serial numbers. Model and serial numbers are located on serial plate(s) as shown.

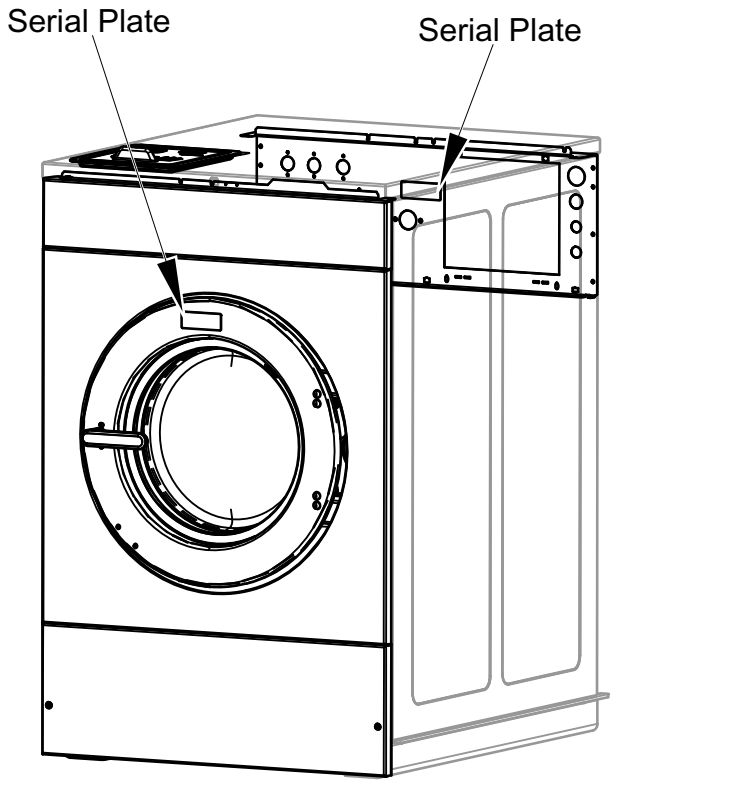

C-CHM2C2_F8668901

© Copyright, Alliance Laundry Systems LLC – DO NOT COPY or TRANSMIT

Notes

© Copyright, Alliance Laundry Systems LLC – DO NOT COPY or TRANSMIT

Model Identification

Information in this manual is applicable to these washer-extractor models:

HCA020NC
HCA020ND
HCA020NE
HCA020NF
HCA020NH
HCA020NQ
HCA020NT
HCA020NV
HCA020NX
HCA030NC
HCA030ND
HCA030NE
HCA030NF
HCA030NH
HCA030NQ
HCA030NT
HCA030NV
HCA030NX
HCA040NC
HCA040ND
HCA040NE
HCA040NF
HCA040NH
HCA040NQ
HCA040NT
HCA040NV
HCA040NX
HCA060NC
HCA060ND
HCA060NE
HCA060NF
HCA060NH
HCA060NQ
HCA060NT
HCA060NV
HCA060NX
HCD020NC
HCD020ND
HCD020NE
HCD020NF
HCD020NH
HCD020NQ
HCD020NT
HCD020NV
HCD020NX
HCD030NC
HCD030ND
HCD030NE
HCD030NF
HCD030NH
HCD030NQ
HCD030NT
HCD030NV
HCD030NX
HCD040NC
HCD040ND
HCD040NE
HCD040NF
HCD040NH
HCD040NQ
HCD040NT
HCD040NV
HCD040NX
HCE020NC
HCE020ND
HCE020NE
HCE020NF
HCE020NH
HCE020NQ
HCE020NT
HCE020NV
HCE020NX
HCE030NC
HCE030ND
HCE030NE
HCE030NF
HCE030NH
HCE030NQ
HCE030NT
HCE030NV
HCE030NX
HCE040NC
HCE040ND
HCE040NE
HCE040NF
HCE040NH
HCE040NQ
HCE040NT
HCE040NV
HCE040NX
HCE060NC
HCE060ND
HCE060NE
HCE060NF
HCE060NH
HCE060NQ
HCE060NT
HCE060NV
HCE060NX
HCG020NC
HCG020ND
HCG020NE
HCG020NF
HCG020NH
HCG020NQ
HCG020NT
HCG020NV
HCG020NX
HCG030NC
HCG030ND
HCG030NE
HCG030NF
HCG030NH
HCG030NQ
HCG030NT
HCG030NV
HCG030NX
HCG040NC
HCG040ND
HCG040NE
HCG040NF
HCG040NH
HCG040NQ
HCG040NT
HCG040NV
HCG040NX
HCG060NC
HCG060ND
HCG060NE
HCG060NF
HCG060NH
HCG060NQ
HCG060NT
HCG060NV
HCG060NX
HCH020NC
HCH020ND
HCH020NE
HCH020NF
HCH020NH
HCH020NQ
HCH020NT
HCH020NV
HCH020NX
HCH030NC
HCH030ND
HCH030NE
HCH030NF
HCH030NH
HCH030NQ
HCH030NT
HCH030NV
HCH030NX
HCH040NC
HCH040ND
HCH040NE
HCH040NF
HCH040NH
HCH040NQ
HCH040NT
HCH040NV
HCH040NX
HCH060NC
HCH060ND
HCH060NE
HCH060NF
HCH060NH
HCH060NQ
HCH060NT
HCH060NV
HCH060NX
HCJ020NC
HCJ020ND
HCJ020NE
HCJ020NF
HCJ020NH
HCJ020NQ
HCJ020NT
HCJ020NV
HCJ020NX
HCJ030NC
HCJ030ND
HCJ030NE
HCJ030NF
HCJ030NH
HCJ030NQ
HCJ030NT
HCJ030NV
HCJ030NX
HCJ040NC
HCJ040ND
HCJ040NE
HCJ040NF
HCJ040NH
HCJ040NQ
HCJ040NT
HCJ040NV
HCJ040NX
HCJ060NC
HCJ060ND
HCJ060NE
HCJ060NF
HCJ060NH
HCJ060NQ
HCJ060NT
HCJ060NV
HCJ060NX
HCK020NH
HCK030NH
HCK040NH
HCK060NH
HCU020NC
HCU020ND
HCU020NE
HCU020NF
HCU020NH
HCU020NQ
HCU020NT
HCU020NV
HCU020NX
HCU030NC
HCU030ND
HCU030NE
HCU030NF
HCU030NH
HCU030NQ
HCU030NT
HCU030NV
HCU030NX
HCU040NC
HCU040ND
HCU040NE
HCU040NF
HCU040NH
HCU040NQ
HCU040NT
HCU040NV
HCU040NX
HCU060NC
HCU060ND
HCU060NE
HCU060NF
HCU060NH
HCU060NQ
HCU060NT
HCU060NV
HCU060NX

© Copyright, Alliance Laundry Systems LLC – DO NOT COPY or TRANSMIT

Product Overview - Galaxy 600 International

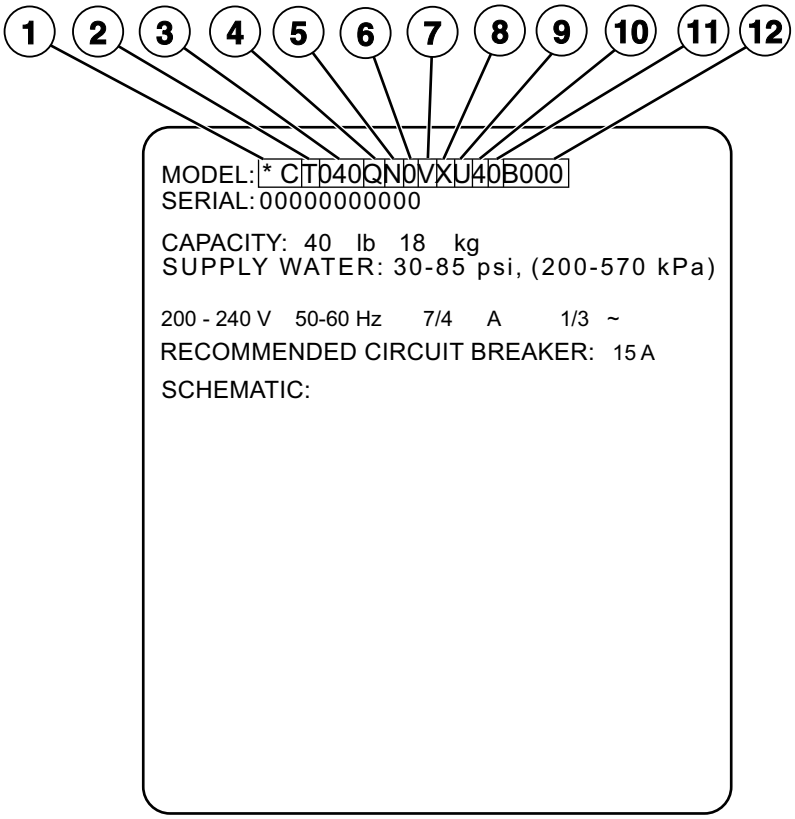

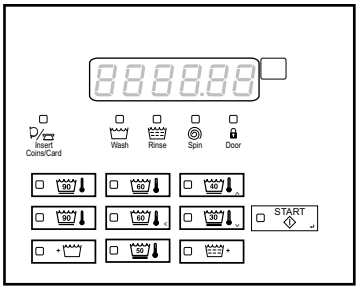

Galaxy 600 International

CHM3489P_F8668901

© Copyright, Alliance Laundry Systems LLC – DO NOT COPY or TRANSMIT

Product Overview - Galaxy 600 International

REF	PART NO.	DESCRIPTION	COMMENTS
1	-	Product Family	HC
2	-	Market Approvals	A (Australia IEC) D (Brazil IEC) G (International) H (China-ROHS IEC) J (Japan-PSE IEC) K (Korea IEC) L (Thailand-TISI IEC) U (International CE/EAC IEC)
3	-	Capacity (Dry Weight in Pounds)	020 030 040 060
4	-	Control	N
5	-	Actuation	L (Central Pay) X (Prep for Coin) Y (Prep for Card) C (Single Coin) D (Dual Coin) E (Electronic Drop) T (Token) F (Single Coin + CD Lock and Key) Q (Dual Coin + CD Lock and Key) H (Electronic Drop + CD Lock and Key) V (Token + CD Lock and Key)
6	-	Coin Meter	0 (Standard) 1 (CD Lock and Key)
7	-	Speed	F (F-Speed) V (V-Speed)
8	-	Voltage	B (120/60/1) W (200-240/50/1/3) Y (200-240/60/1/3) X (200-240/50-60/1/3) Q (200-240/50-60/3) P (380-415/50-60/3) N (440-480/50-60/3)
9	-	Panel	B (Chrome Door) C (Chrome Door) U (Vinyl) 1 (Stainless Steel Side)
10	-	Design	4 6 7 8
11	-	Heat	0 (Standard) D (Steam) E (Electric Heat) P (Prep for Steam)
12	-	Features and Options	

© Copyright, Alliance Laundry Systems LLC – DO NOT COPY or TRANSMIT

Labels

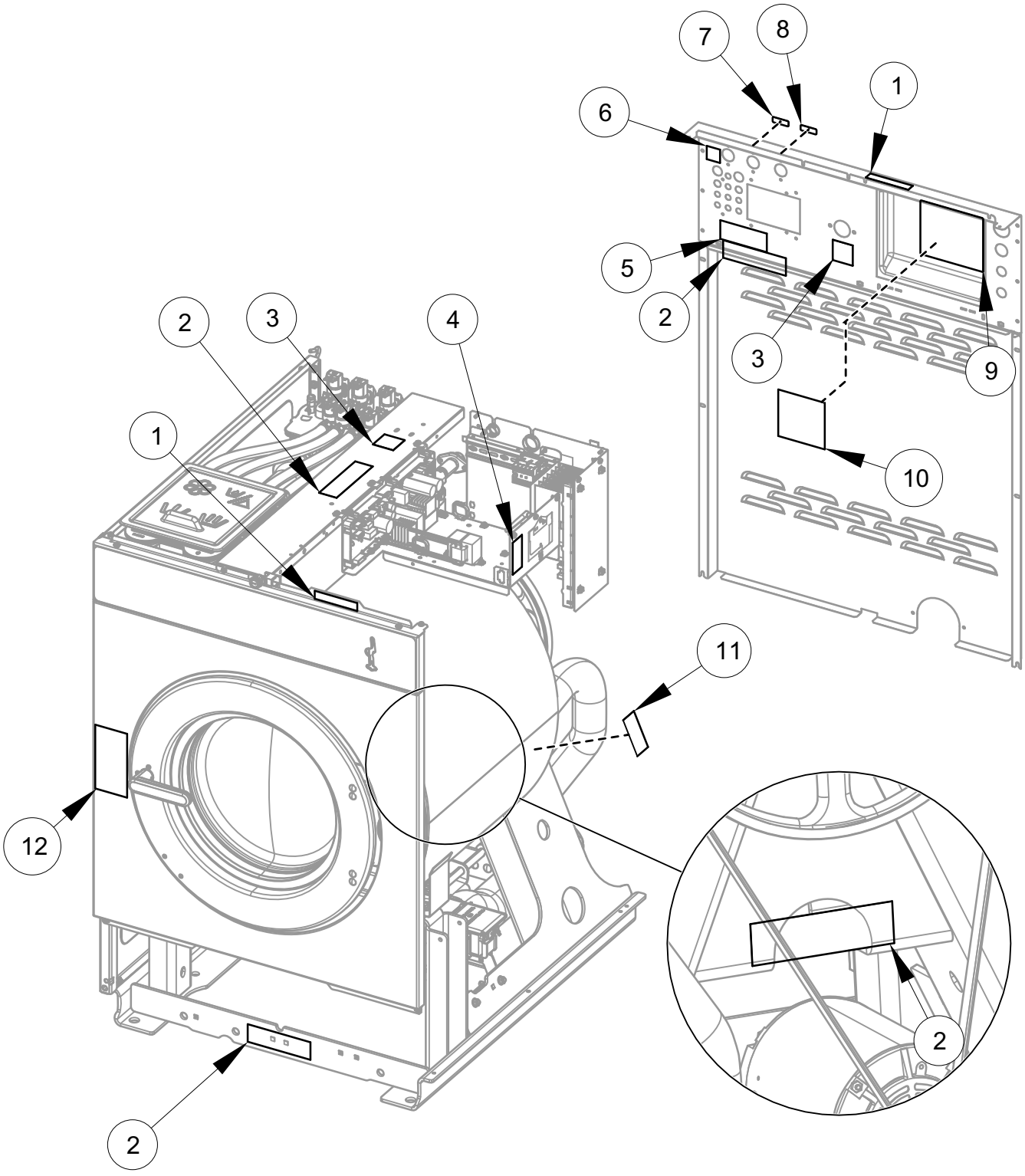

© Copyright, Alliance Laundry Systems LLC – DO NOT COPY or TRANSMIT

Labels

REF	PART NO.	DESCRIPTION	COMMENTS
1	F8614501	Danger Label	English/Quebec/French
2	44324001	Warning Label	Pinch/Shock; English/French
	F8614201	Shock Warning Label	Icon
	F8615701	Pinch Warning Label	Icon
3	F8614301	Hot Surface Warning Label	English/Quebec/French
	F8609001	Hot Surface Warning Label	Icon
4	F8601301	Label	Warning; Underground components
5	F8609401	Label	Notice; Chemical connection
6	203853	Label	ROHS (China)
7	F8611301	Label	Hot water; Icon
8	F8611401	Label	Cold water; Icon
9	F8611601	Warning Label	Warning; English/Quebec/French
10	F8602401	Label	Notice; Large expansion board
11	70538401	Pinch Warning Label	English/French
	F8615701	Pinch Warning Label	Icon
12	F8614801	Label	Warning fire/injury; English/Quebec/French

© Copyright, Alliance Laundry Systems LLC – DO NOT COPY or TRANSMIT

Control Module and Front Tray Assembly

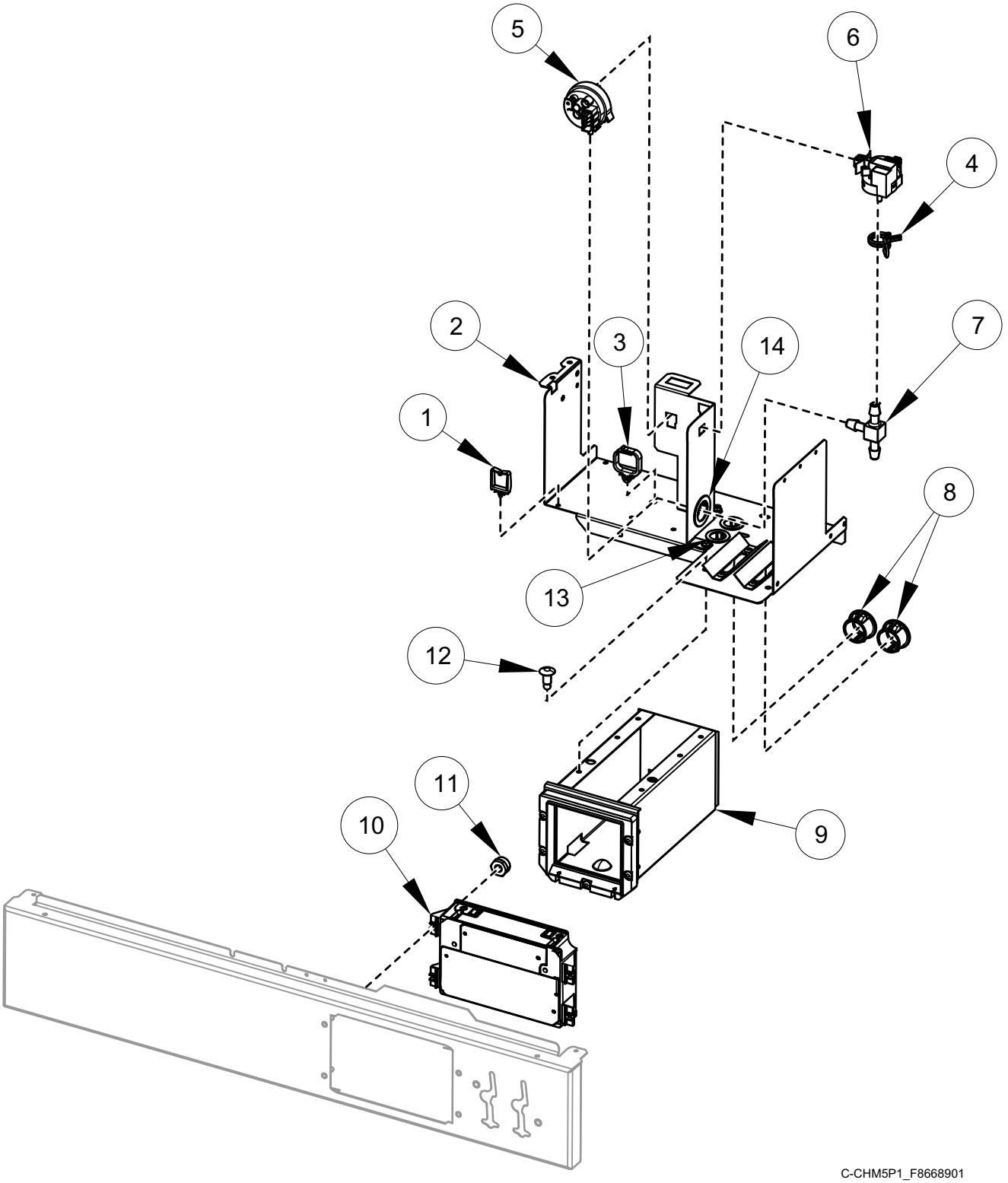

© Copyright, Alliance Laundry Systems LLC – DO NOT COPY or TRANSMIT

Control Module and Front Tray Assembly

REF	PART NO.	DESCRIPTION	COMMENTS
	44374701	App Pay Overlay Kit	
	203361P	Machine ID Control Assembly	
	F8567301	Front Tray Assembly	20 pound models; Includes items 1-3, 6, 8, 9, 12-14, 70413301 Pushbutton Switch and F8519701 Coin Vault Harness
	F8567304	Front Tray Assembly	20 pound models; Steam or electric heat; Includes items 1-9, 12-14, 70413301 Pushbutton Switch and F8519701 Coin Vault Harness
	F8567302	Front Tray Assembly	30 pound models; Includes items 1-3, 6, 8, 9, 12-14, 70413301 Pushbutton Switch and F8519701 Coin Vault Harness
	F8567305	Front Tray Assembly	30 pound models; Steam or electric heat; Includes items 1-9, 12-14, 70413301 Pushbutton Switch and F8519701 Coin Vault Harness
	F8567303	Front Tray Assembly	40 and 60 pound models; Includes items 1-3, 6, 8, 9, 12-14, 70413301 Pushbutton Switch and F8519701 Coin Vault Harness
	F8567306	Front Tray Assembly	40 and 60 pound models; Steam or electric heat; Includes items 1-9, 12-14, 70413301 Pushbutton Switch and F8519701 Coin Vault Harness
	F8519701	Coin Vault Harness	
	F8519501	Harness	Communication; 20 and 30 pound models
	F8519502	Harness	Communication; 40 and 60 pound models
	F8519601	Harness	Coin access
	F8519403	Emergency Stop Bypass Harness	
1	70366201	Wire Clip	
2	F8531001	Front Tray Assembly	
3	F8449501	Wire Clip	
4	39282	Hose Clamp	
5	F8609101	Water Level Pressure Switch	Steam or electric heat
	F8405303	Tubing	Electric heat
6	F8623401	Pressure Sensor	
	F8405302	Tubing	Electric heat
7	203464	Barbed Tee	Steam or electric heat
8	M411826	Snap Bushing	
9	F8529101	Coin Vault Assembly	
10	F8493901P	Control Assembly	
11	685846	Nut	
12	70058501	Pop Rivet	
13	F140938	Snap Bushing	
14	M402542	Snap Bushing	

© Copyright, Alliance Laundry Systems LLC – DO NOT COPY or TRANSMIT

Control Tray Assembly

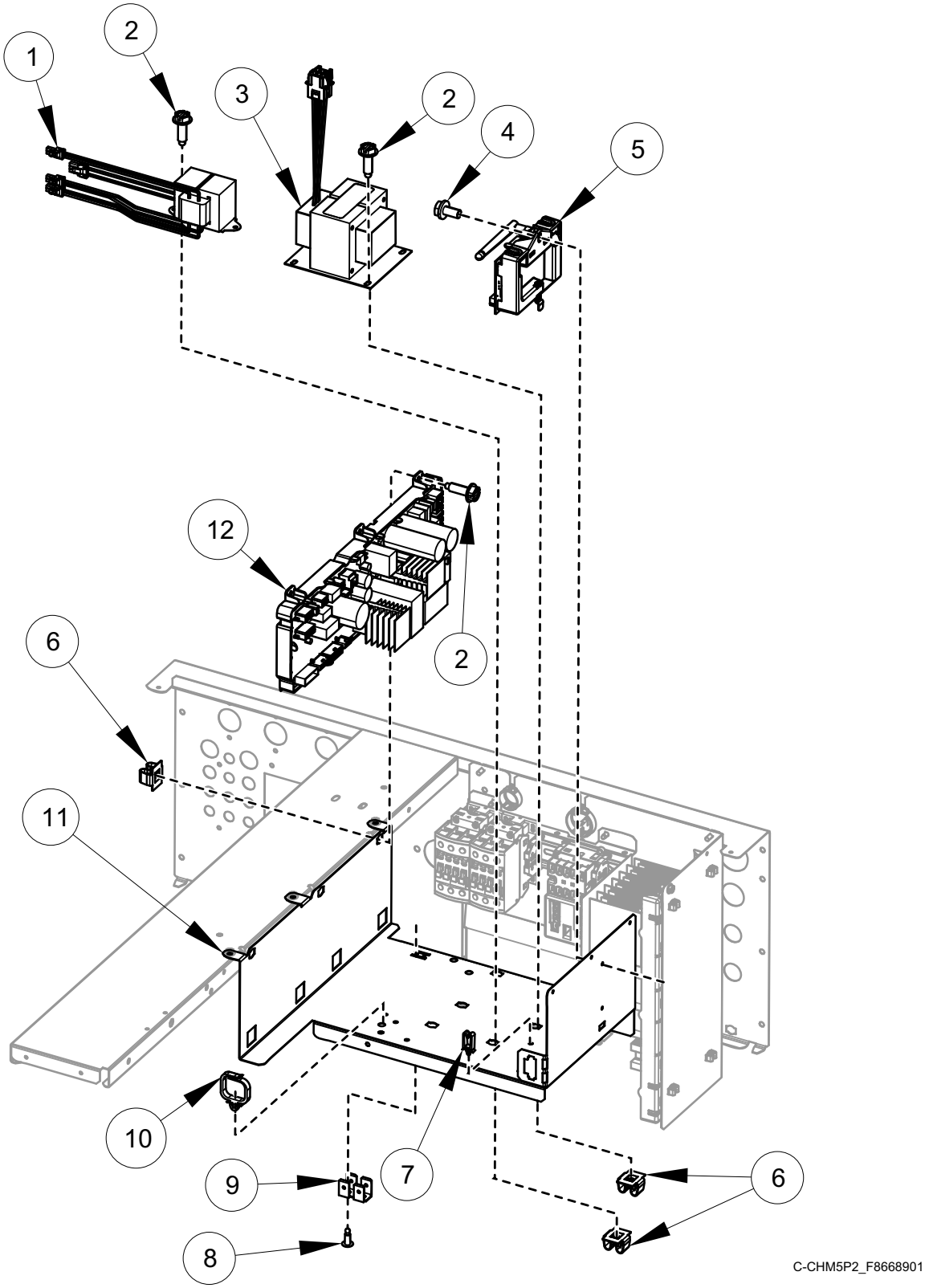

© Copyright, Alliance Laundry Systems LLC – DO NOT COPY or TRANSMIT

Control Tray Assembly

REF	PART NO.	DESCRIPTION	COMMENTS
	205391P	Gateway	
	204145P	Gateway	Models starting February 2019
	F8520403	Wireless Harness	20 and 30 pound models through January 2019
	F8674003	Wireless Harness	20 and 30 pound models starting February 2019; Design 4, 6 and 7
	F8520404	Wireless Harness	40 and 60 pound models through January 2019
	F8674004	Wireless Harness	40 and 60 pound models starting February 2019; Design 4, 6 and 7
	F8519301	Harness	Tray power harness; Design 4, 6 and 7
	F8772201	Harness	Tray power; Design 8
	F8773201	Harness	Electric heat; Single contactor; Design 8
	F8773202	Harness	Electric heat; Dual contactor; Design 8
	F8773203	Harness	Steam heat; Dual contactor; Design 8
	F8769301	Harness	Drive communication; Design 8
	F8662401	Wireless Kit	20 and 30 pound models through January 2019; Includes items 4, 5, F8520403 Wireless Harness and labels
	F8676001	Wireless Kit	20 and 30 pound models starting February 2019; Includes items 4, 5, F8674003 Wireless Harness and labels
	F8662402	Wireless Kit	40 and 60 pound models through January 2019; Includes items 4, 5, F8520404 Wireless Harness and labels
	F8676101	Wireless Kit	40 and 60 pound models starting February 2019; Includes items 4, 5, F8674004 Wireless Harness and labels
1	202757	Transformer	B voltage with external supply
	202758	Transformer	N, P, Q, W, X and Y voltage with external supply
2	F8206901	Screw	
3	F8491101	Transformer	N and P voltage
4	430497	Screw	
5	203532	Wireless Network Control Assembly	Models through January 2019
	807211	Wireless Network Control Assembly	Models starting February 2019
6	70030501	Expansion Clip	
7	70347601	Wire Clip	External supply
8	M400003	Pop Rivet	
9	00622SG	Terminal	
10	F8449501	Wire Clip	
11	F8530701	Control Tray	
12	F8774901P	Input and Output Control Assembly	

© Copyright, Alliance Laundry Systems LLC – DO NOT COPY or TRANSMIT

Flush Mount Coin Meter Assembly - Single Drop

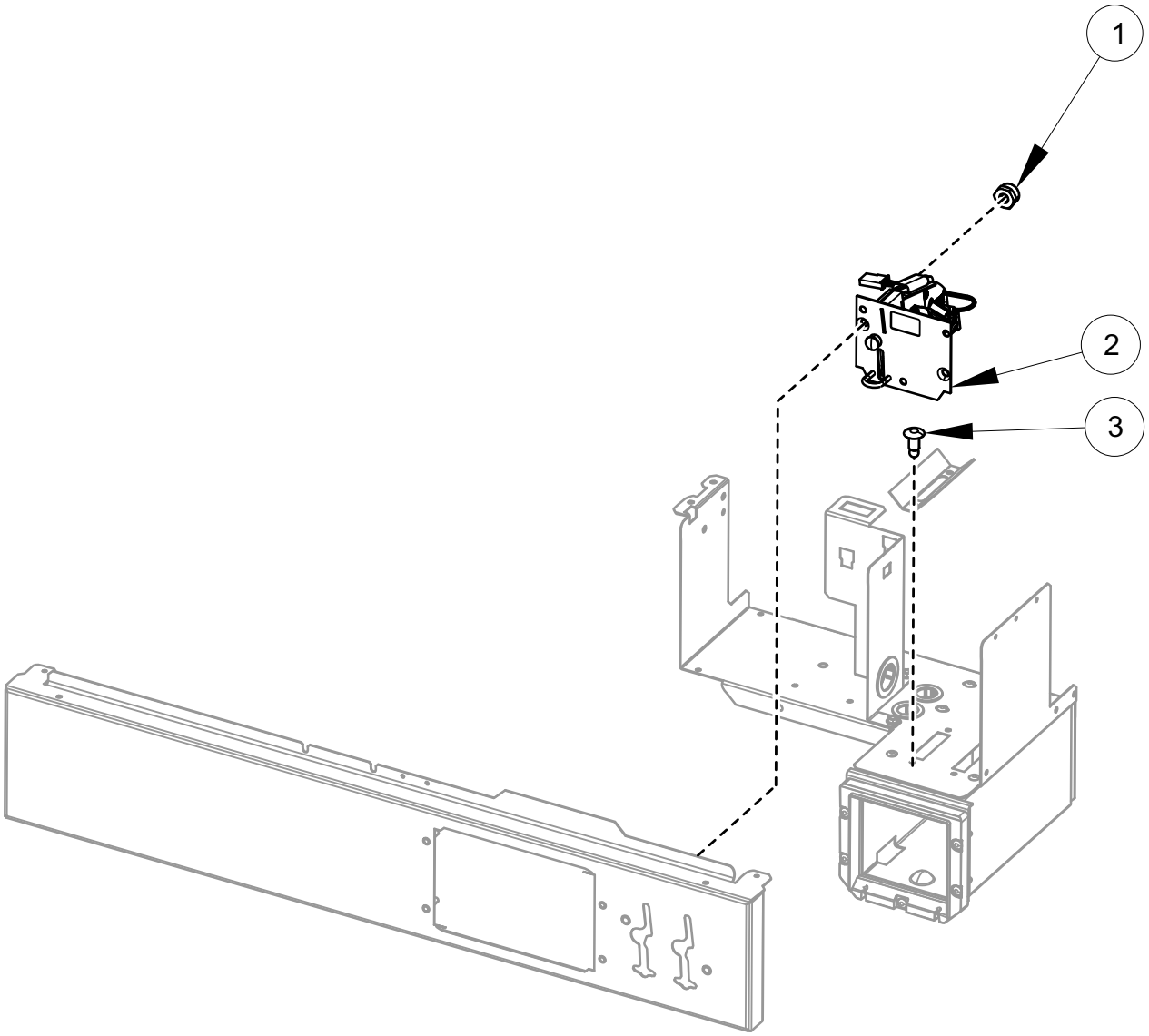

C-CHM6P7_F8668901

© Copyright, Alliance Laundry Systems LLC – DO NOT COPY or TRANSMIT

Flush Mount Coin Meter Assembly - Single Drop

REF	PART NO.	DESCRIPTION	COMMENTS
	44374701	App Pay Overlay Kit	
	38725	Coin Identification Paper	
	200674P	Opto Coupler	
1	685846	Nut	
2	70441601P	Coin Drop	U.S.A.; $.25
	38475	Coin Drop Assembly	Japan; 100 yen
	38464P	Coin Drop Assembly	Canada; .25
	CK077	Coin Drop Kit	Taiwan; 10 NT
	70506901	Coin Drop Assembly	Singapore; $1.00 NEW
	38462P	Coin Drop Assembly	Token; STD 118-1
	38463	Coin Drop Assembly	Token; STD 118-5
	38963P	Coin Drop	Token STD 118-16
	CK097	Coin Drop Kit	Jeton 08MS
	201141	Coin Drop Assembly	Token; Jeton wh121
	70471601	Coin Drop Assembly	Token; 7K
3	70058501	Pop Rivet	

© Copyright, Alliance Laundry Systems LLC – DO NOT COPY or TRANSMIT

Flush Mount Coin Meter Assembly - Dual Drop

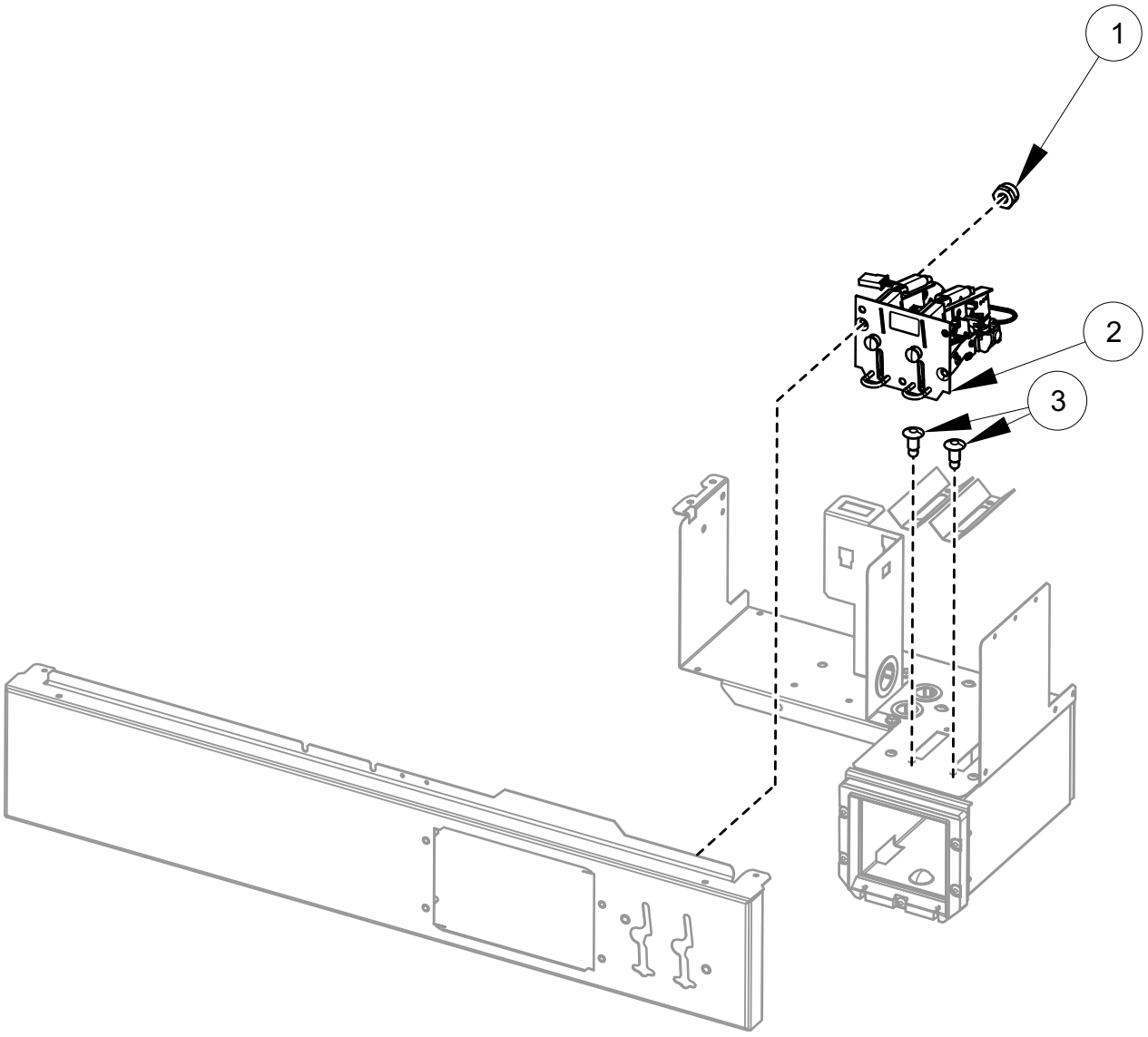

C-CHM6P8_F8668901

© Copyright, Alliance Laundry Systems LLC – DO NOT COPY or TRANSMIT

Flush Mount Coin Meter Assembly - Dual Drop

REF	PART NO.	DESCRIPTION	COMMENTS
	44374701	App Pay Overlay Kit	
	38725	Coin Identification Paper	
	200674P	Opto Coupler	
1	685846	Nut	
2	70441603	Coin Drop	U.S.A.; $.25 and $1.00
	38519	Coin Drop Assembly	Japan; 100 yen and 500 yen
	70441602	Coin Drop Assembly	Canada; .25 and $1.00
	38467	Coin Drop Assembly	Australia; $0.20 and $1.00
	70447301	Coin Drop Assembly	Australia; $1.00 and $2.00
	70283102	Coin Drop Assembly	0.20 and 0.50 Euro
	210195	Coin Drop Assembly	0.20 and 1.00 Euro
	210196	Coin Drop Assembly	0.50 and 1.00 Euro
	F0160737-00	Coin Meter	0.50 and 2.00 Euro
	70281102	Coin Drop Assembly	Taiwan; 10 and 50 NT
	70482401	Coin Drop Assembly	New Zealand; $1.00 and $2.00
	CK503	Coin Drop Kit	U.S.A. and Canada; $.25 and $1.00
3	70058501	Pop Rivet	

© Copyright, Alliance Laundry Systems LLC – DO NOT COPY or TRANSMIT

Electronic Coin Meter Assembly

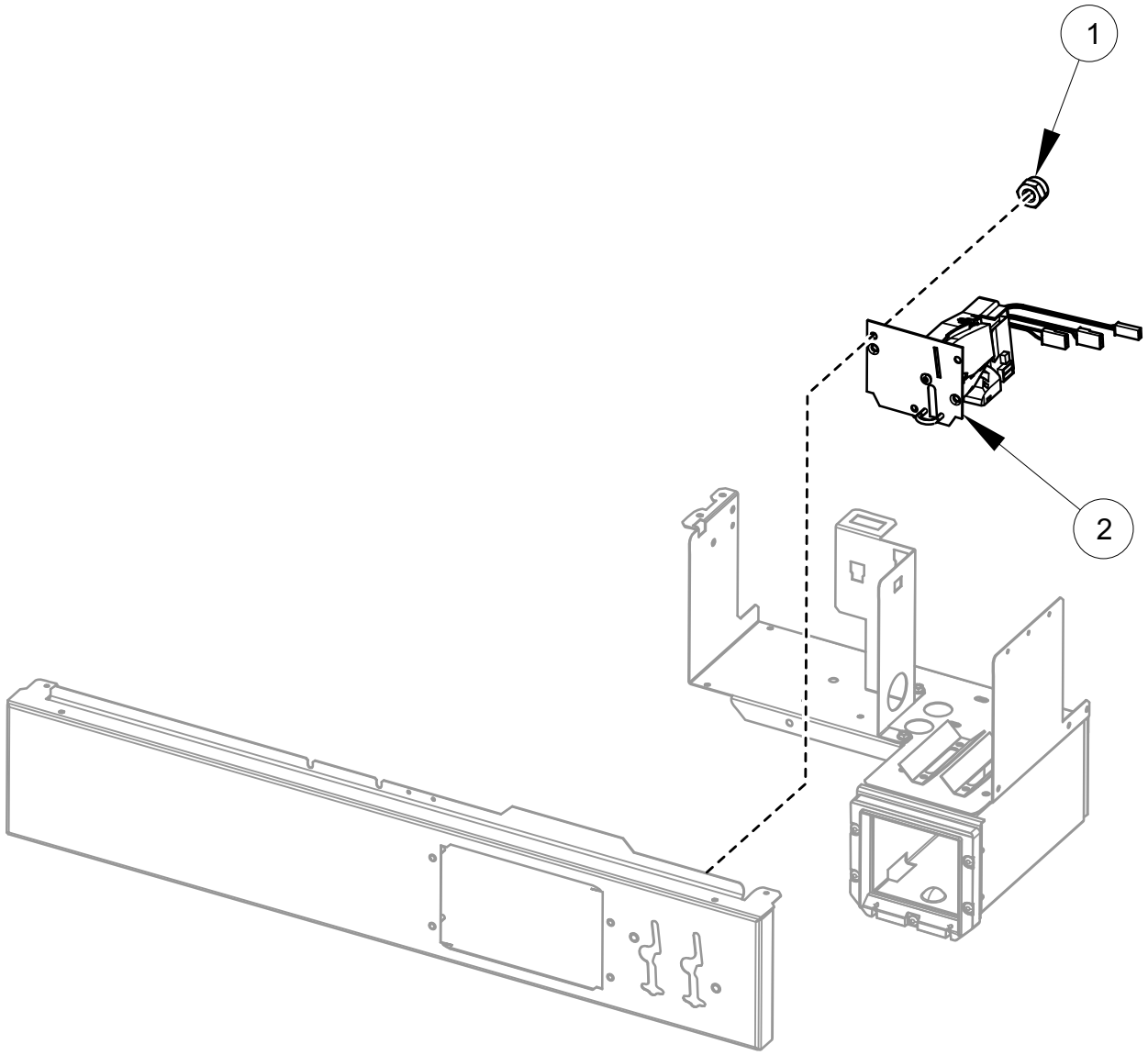

C-CHM6P6_F8668901

© Copyright, Alliance Laundry Systems LLC – DO NOT COPY or TRANSMIT

Electronic Coin Meter Assembly

REF	PART NO.	DESCRIPTION	COMMENTS
	44374701	App Pay Overlay Kit	
	38725	Coin Identification Paper	
	CK500	Electronic Coin Drop Kit	For use when installing Electronic Coin Drop Kits
	F8034701P	Pulse Expander Assembly	
1	F430215	Nut	
2	70513302	Electronic Coin Drop Assembly	Euro and Great Britain coins
	70513310	Electronic Coin Drop Assembly	Japan and Thailand coins
	70513304	Electronic Coin Drop Assembly	Australia, New Zealand, Hong Kong and South Korea coins
	70513303	Electronic Coin Drop Assembly	Denmark, Norway and Euro coins
	70513306	Electronic Coin Drop Assembly	Mexico, Ecuador and U.S.A. coins
	70294107	Electronic Coin Drop Assembly	Lithuania, Latvia and Euro coins
	70513311	Electronic Coin Drop Assembly	China and Malaysia coins
	70513318	Electronic Coin Drop Assembly	South African 1 and 5 rand coins
	70513309	Electronic Coin Drop Assembly	Euro coins
	70513312	Electronic Coin Drop Assembly	Russia coins
	70513313	Electronic Coin Drop Assembly	Philippines coins
	70513314	Electronic Coin Drop Assembly	Thailand coins
	70513315	Electronic Coin Drop Assembly	Chile coins
	70513316	Electronic Coin Drop Assembly	Singapore coins
	CK115	Electronic Coin Drop Kit	United States and Canada; Includes 38725 Coin Identification Paper
	CK099	Electronic Coin Drop Kit	Australia (default), New Zealand, Hong Kong, South Korea and Malaysia; Includes 38725 Coin Identification Paper
	CK100	Electronic Coin Drop Kit	United Kingdom (default) and Europe; Includes 38725 Coin Identification Paper
	CK101	Electronic Coin Drop Kit	Europe (default), Denmark and Norway; Includes 38725 Coin Identification Paper
	CK125	Electronic Coin Drop Kit	South Africa; Includes 38725 Coin Identification Paper
	CK109	Electronic Coin Drop Kit	Euro; Includes 38725 Coin Identification Paper
	CK110	Electronic Coin Drop Kit	Mexico (default), Ecuador and United States; Includes 38725 Coin Identification Paper
	CK113	Electronic Coin Drop Kit	Japan and Taiwan; Includes 38725 Coin Identification Paper
	CK116	Electronic Coin Drop Kit	Malaysia (default) and China; Includes 38725 Coin Identification Paper
	CK117	Electronic Coin Drop Kit	Russia; Includes 38725 Coin Identification Paper
	CK118	Electronic Coin Drop Kit	Philippine; Includes 38725 Coin Identification Paper
	CK119	Electronic Coin Drop Kit	Thailand; Includes 38725 Coin Identification Paper
	CK120	Electronic Coin Drop Kit	Chile; Includes 38725 Coin Identification Paper
	CK121	Electronic Coin Drop Kit	Singapore; Includes 38725 Coin Identification Paper
	CK122	Coin Drop Kit	New Zealand; 1.00 and 2.00; Includes 38725 Coin Identification Paper

© Copyright, Alliance Laundry Systems LLC – DO NOT COPY or TRANSMIT

Optional Coin Box

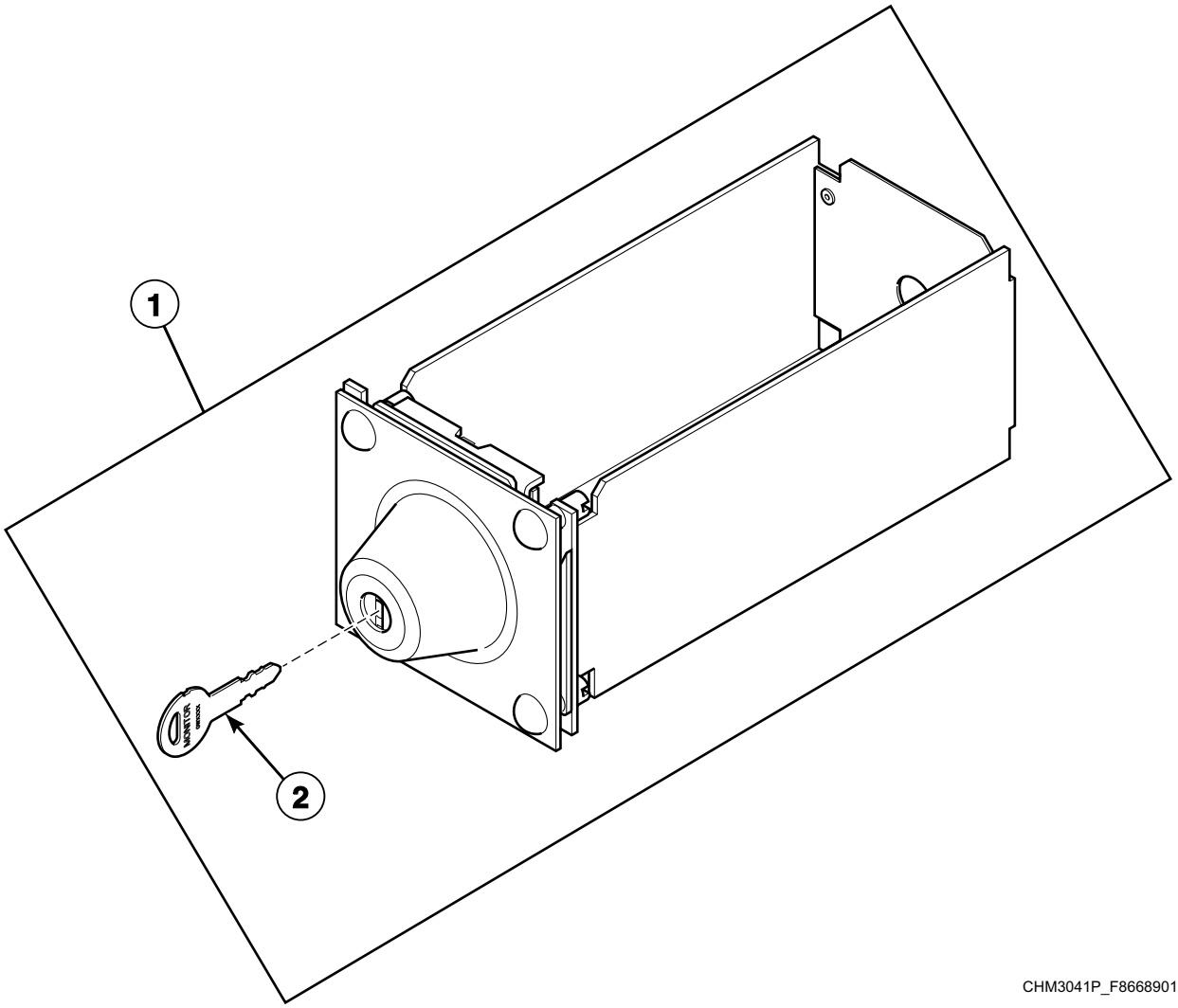

CHM3041P_F8668901

© Copyright, Alliance Laundry Systems LLC – DO NOT COPY or TRANSMIT

Optional Coin Box

REF	PART NO.	DESCRIPTION	COMMENTS
1	CK043	Coin Box Kit	
2	F160420	Key	GW0023

© Copyright, Alliance Laundry Systems LLC – DO NOT COPY or TRANSMIT

Inverter Drive Box - 20 and 30 Pound Models with B Voltage (Drawing 1 of 2)

Design 4, 6 and 7

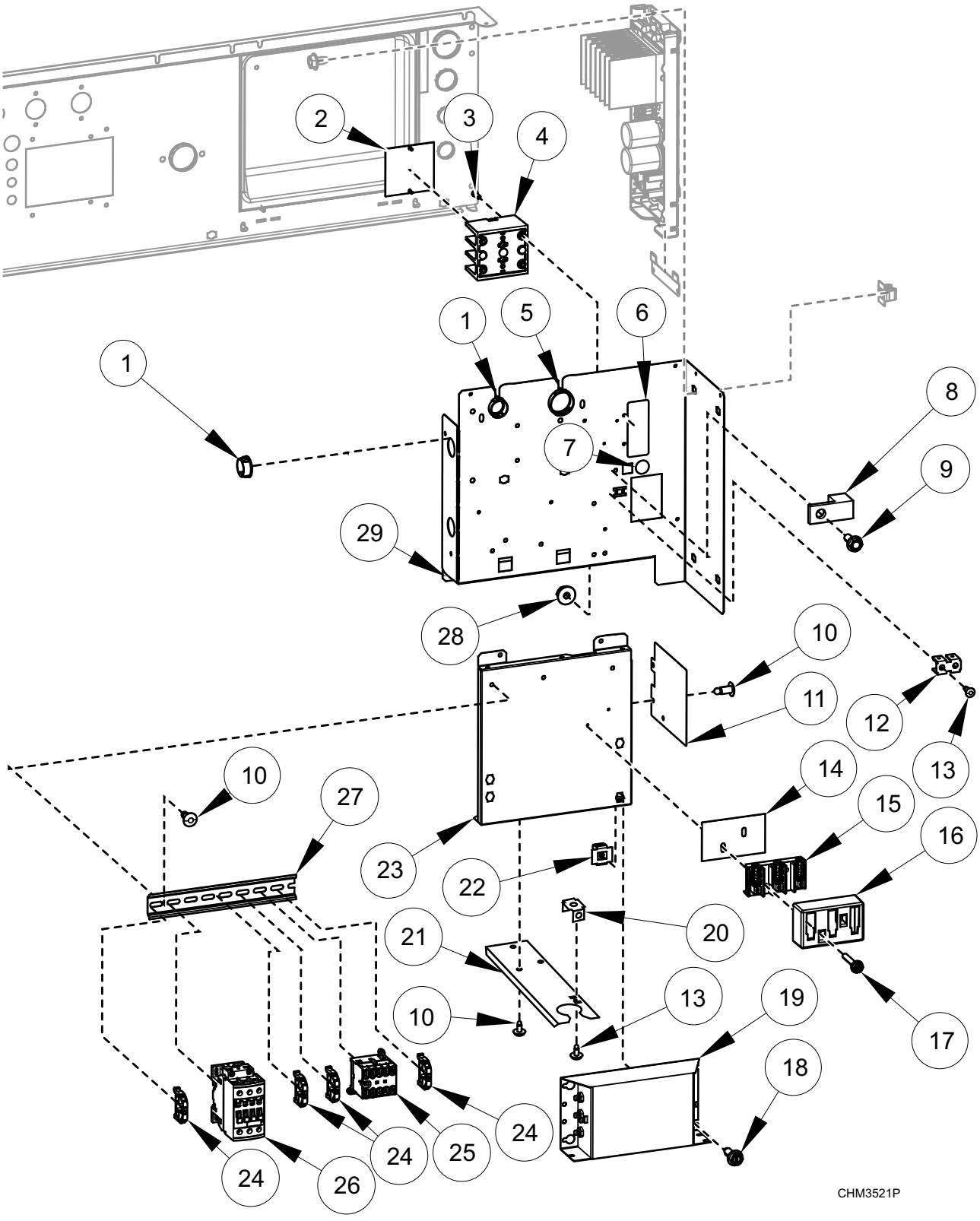

© Copyright, Alliance Laundry Systems LLC – DO NOT COPY or TRANSMIT

Inverter Drive Box - 20 and 30 Pound Models with B Voltage (Drawing 1 of 2)

REF	PART NO.	DESCRIPTION	COMMENTS
	F8567001	Drive Panel Base Assembly	Includes items 10-13, 21, 25 and 27
	F8662801	Filter Kit	Includes items 1, 14-20, harnesses and labels
	F8518405	Harness	Power TB1
	F8518604	Harness	Power drive
	F8528001	Harness	TB filter
	F8528002	Harness	PDB filter; Electric heat
	F8528004	Harness	TB Filter
	F8528006	Harness	TB2 Filter
	F8619101	Power Harness	Power contactor; Electric heat
	F8619102	Harness	Power contactor; Electric heat
1	F140938	Snap Bushing	
2	44014901P	Power Distribution Block Cover	Electric heat
3	39733	Screw	Electric heat
4	M413865	Power Distribution Block	Electric heat
5	70346501	Bushing	
6	44286801	Label	Power input; L1, N
7	D516100	Label	
8	M411283	Ground Lug Connector	
9	685837	Screw	
10	70058501	Pop Rivet	
11	F8616901	Drive Shield	
12	00622SG	Terminal	
13	M400003	Pop Rivet	
14	M413862	Insulator	
15	430642	Terminal Block	
16	70333001	Terminal Block Shield	
17	51783	Screw	
18	F8206901	Screw	
19	F8591601	EMI Filter	
20	00621SG	Male Tab Terminal	IEC models
21	F8744301	Harness Support Bracket	IEC models
22	70030501	Expansion Clip	
23	F8530901	Contactor Tray	
24	F8449801	End Stop	
25	70482601	Contactor	5.5kW/500V; 24VDC
26	70482701	Contactor	50A; 24VDC
27	M412689	DIN Rail	7.5 mm x 35 mm x 8.364 inch
28	44088001	Nut	
29	F8530801	Drive Terminal Tray	

© Copyright, Alliance Laundry Systems LLC – DO NOT COPY or TRANSMIT

Inverter Drive Box - 20 and 30 Pound Models with B Voltage (Drawing 2 of 2)

Design 8

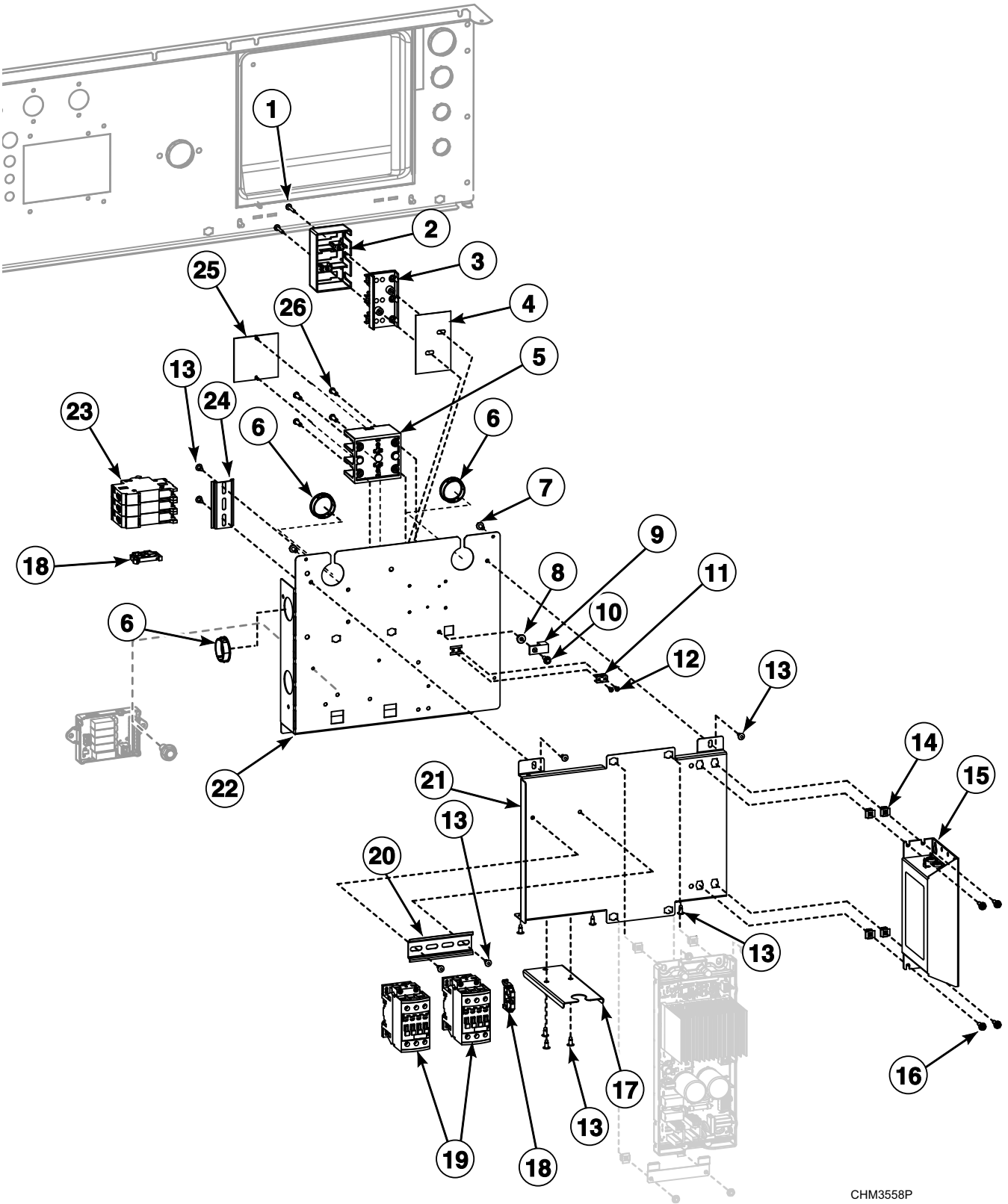

© Copyright, Alliance Laundry Systems LLC – DO NOT COPY or TRANSMIT

Inverter Drive Box - 20 and 30 Pound Models with B Voltage (Drawing 2 of 2)

REF	PART NO.	DESCRIPTION	COMMENTS
	F8773801	Harness	Power; TB1
	F8769401	Harness	Drive power
1	51783	Screw	
2	70333001	Terminal Block Shield	
3	430642	Terminal Block	
4	M413862	Insulator	
5	M413865	Power Distribution Block	Electric Heat
6	70346501	Bushing	
7	33562	Screw	
8	44088001	Nut	
9	M411283	Ground Lug Connector	
10	685837	Screw	
11	00622SG	Terminal	
12	M400003	Pop Rivet	
13	70058501	Pop Rivet	
14	70030501	Expansion Clip	
15	F8769701	EMI Filter	
16	F8206901	Screw	
17	F8773101	Harness Support Bracket	
18	F8449801	End Stop	
19	70482701	Contactor	
20	C003103	DIN Rail	
21	F8768301	Contactor Tray	
22	F8768201	Drive Terminal Tray	
23	70488101	Circuit Breaker	
24	B12315401	DIN Rail	
25	44014901P	Power Distribution Block Cover	
26	39733	Screw	

© Copyright, Alliance Laundry Systems LLC – DO NOT COPY or TRANSMIT

Inverter Drive Box - 20 and 30 Pound Models with N, P, Q, W, X and Y Voltage

Design 4, 6 and 7

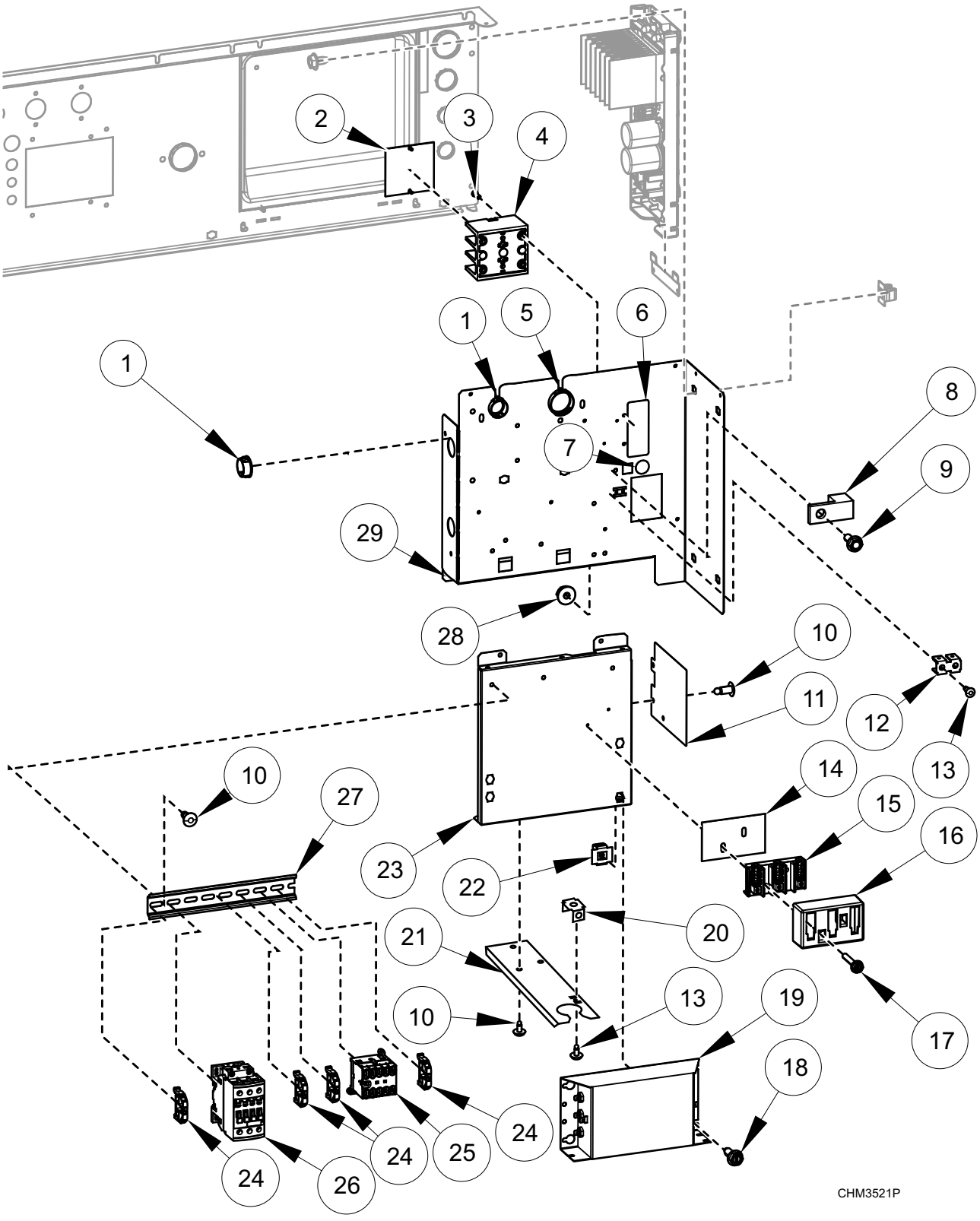

© Copyright, Alliance Laundry Systems LLC – DO NOT COPY or TRANSMIT

Inverter Drive Box - 20 and 30 Pound Models with N, P, Q, W, X and Y Voltage

REF	PART NO.	DESCRIPTION	COMMENTS
	F8567001	Drive Panel Base Assembly	Includes items 10-13, 21, 25 and 27
	F8518401	Harness	Power TB1; W, X and Y voltage
	F8518501	Harness	Power TB1; N and P voltage
	F8518502	Harness	Power PDB; N and P voltage; Electric heat
	F8518402	Harness	Power PDB; Q voltage; Electric heat
	F8518404	Harness	Power filter; Q, W, X, and Y voltage
	F8518504	Harness	Power filter; N and P voltage
	F8518605	Harness	Power drive; Q, W, X, and Y voltage
	F8518606	Harness	Power drive; N and P voltage
	F8528001	Harness	TB filter
	F8528002	Harness	PDB filter; Electric heat
	F8528005	Harness	TB2 Filter; N, P, Q, W, X, and Y voltage
	F8619101	Power Harness	Power contactor; Electric heat
	F8619102	Harness	Power contactor; Electric heat
	F8662809	Filter Kit	Includes items 1, 14-20, harnesses and labels; Q voltage; Electric heat
	F8662810	Filter Kit	Includes items 1, 14-20, harnesses and labels; N and P voltage; Electric heat
	F8662803	Filter Kit	Includes items 1, 14-20, harnesses and labels; W, X and Y voltage
	F8662805	Filter Kit	Includes items 1, 14-20, harnesses and labels; N and P voltage
1	F140938	Snap Bushing	
2	44014901P	Power Distribution Block Cover	Electric heat
3	39733	Screw	Electric heat
4	M413865	Power Distribution Block	Electric heat
5	70346501	Bushing	
6	44286803	Label	Power input; L1, L2, L3; N and P voltage
	44286804	Wire Label	Power input; L1, L2/N; L1, L2, L3; W, X and Y voltage
7	D516100	Label	
8	M411283	Ground Lug Connector	
9	685837	Screw	
10	70058501	Pop Rivet	
11	F8616901	Drive Shield	
12	00622SG	Terminal	
13	M400003	Pop Rivet	
14	M413862	Insulator	
15	430642	Terminal Block	
16	70333001	Terminal Block Shield	
17	51783	Screw	
18	F8206901	Screw	
19	F8591801	EMI Filter	
	F8637501	EMI Filter	
20	00621SG	Male Tab Terminal	IEC models
21	F8744301	Harness Support Bracket	IEC models
22	70030501	Expansion Clip	
23	F8530901	Contactor Tray	
24	F8449801	End Stop	
25	70482601	Contactor	5.5kW/500V; 24VDC
26	70482701	Contactor	50A; 24VDC
27	M412689	DIN Rail	7.5 mm x 35 mm x 8.364 inch
28	44088001	Nut	
29	F8530801	Drive Terminal Tray	

© Copyright, Alliance Laundry Systems LLC – DO NOT COPY or TRANSMIT

Inverter Drive Box - 20 and 30 Pound Models with Q and X Voltage

Design 8

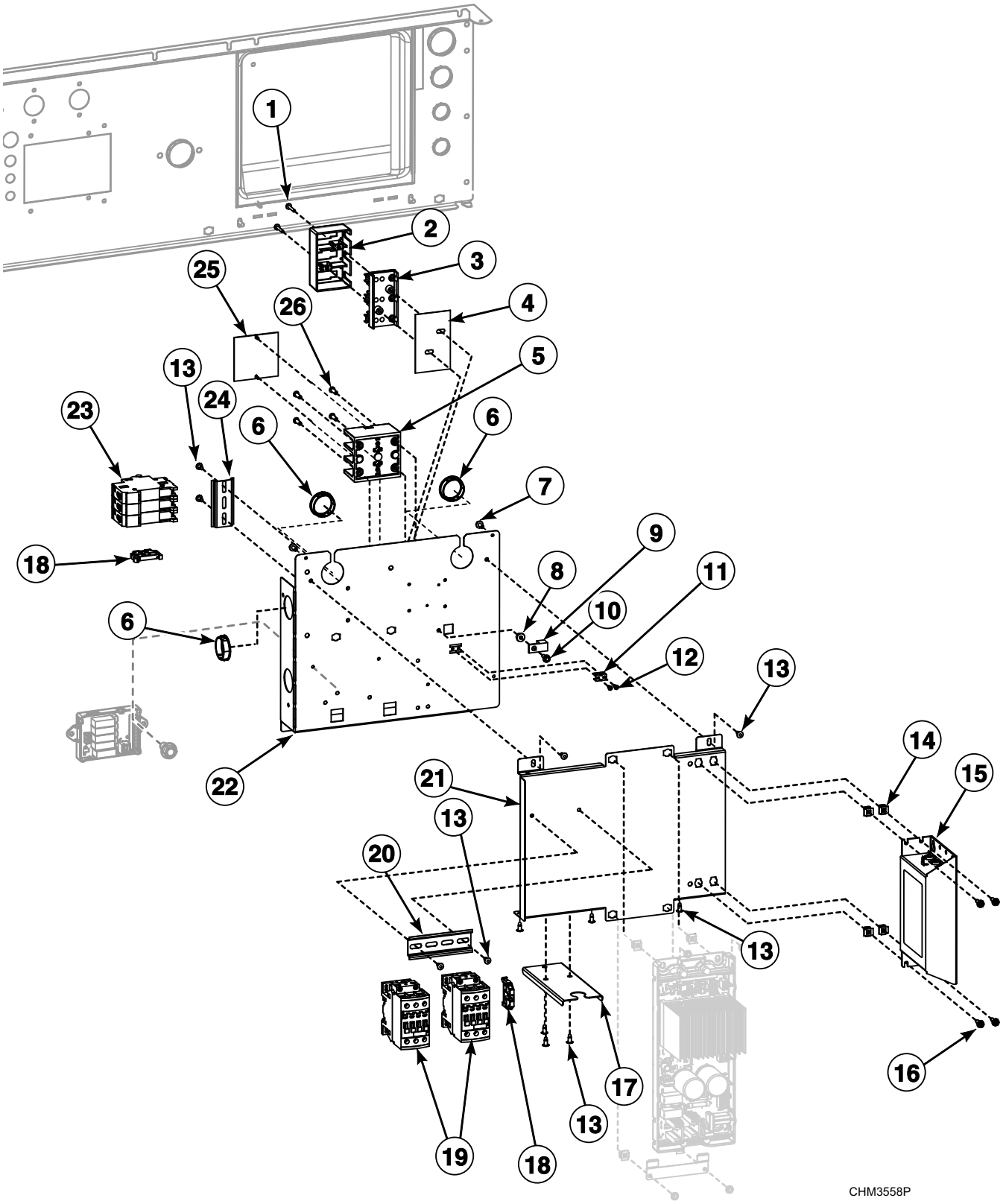

© Copyright, Alliance Laundry Systems LLC – DO NOT COPY or TRANSMIT

Inverter Drive Box - 20 and 30 Pound Models with Q and X Voltage

REF	PART NO.	DESCRIPTION	COMMENTS
	F8780101	Harness	Filter to Drive
	F8769402	Harness	Power TB1; Drive; X voltage
	F8773801	Harness	Power TB1; Control; X voltage
	F8773802	Harness	Power PDB; Control; Q voltage
	F8759403	Harness	Power PDB; Drive; Q voltage
	F8780601	Harness	TB filter
	F8780602	Harness	PDB filter; Electric heat
	F8619101	Power Harness	Power contactor; Electric heat
	F8619102	Harness	Power contactor; Electric heat
1	51783	Screw	
2	70333001	Terminal Block Shield	
3	430642	Terminal Block	
4	M413862	Insulator	
5	M413865	Power Distribution Block	Electric Heat
6	70346501	Bushing	
7	33562	Screw	
8	44088001	Nut	
9	M411283	Ground Lug Connector	
10	685837	Screw	
11	00622SG	Terminal	
12	M400003	Pop Rivet	
13	70058501	Pop Rivet	
14	70030501	Expansion Clip	
15	F8769701	EMI Filter	
16	F8206901	Screw	
17	F8773101	Harness Support Bracket	
18	F8449801	End Stop	
19	70482701	Contactor	
20	C003103	DIN Rail	
21	F8768301	Contactor Tray	
22	F8768201	Drive Terminal Tray	
23	70488101	Circuit Breaker	
24	B12315401	DIN Rail	
25	44014901P	Power Distribution Block Cover	
26	39733	Screw	

© Copyright, Alliance Laundry Systems LLC – DO NOT COPY or TRANSMIT

Inverter Drive Box - 40 Pound Models with B Voltage (Drawing 1 of 2)

Design 4, 6 and 7

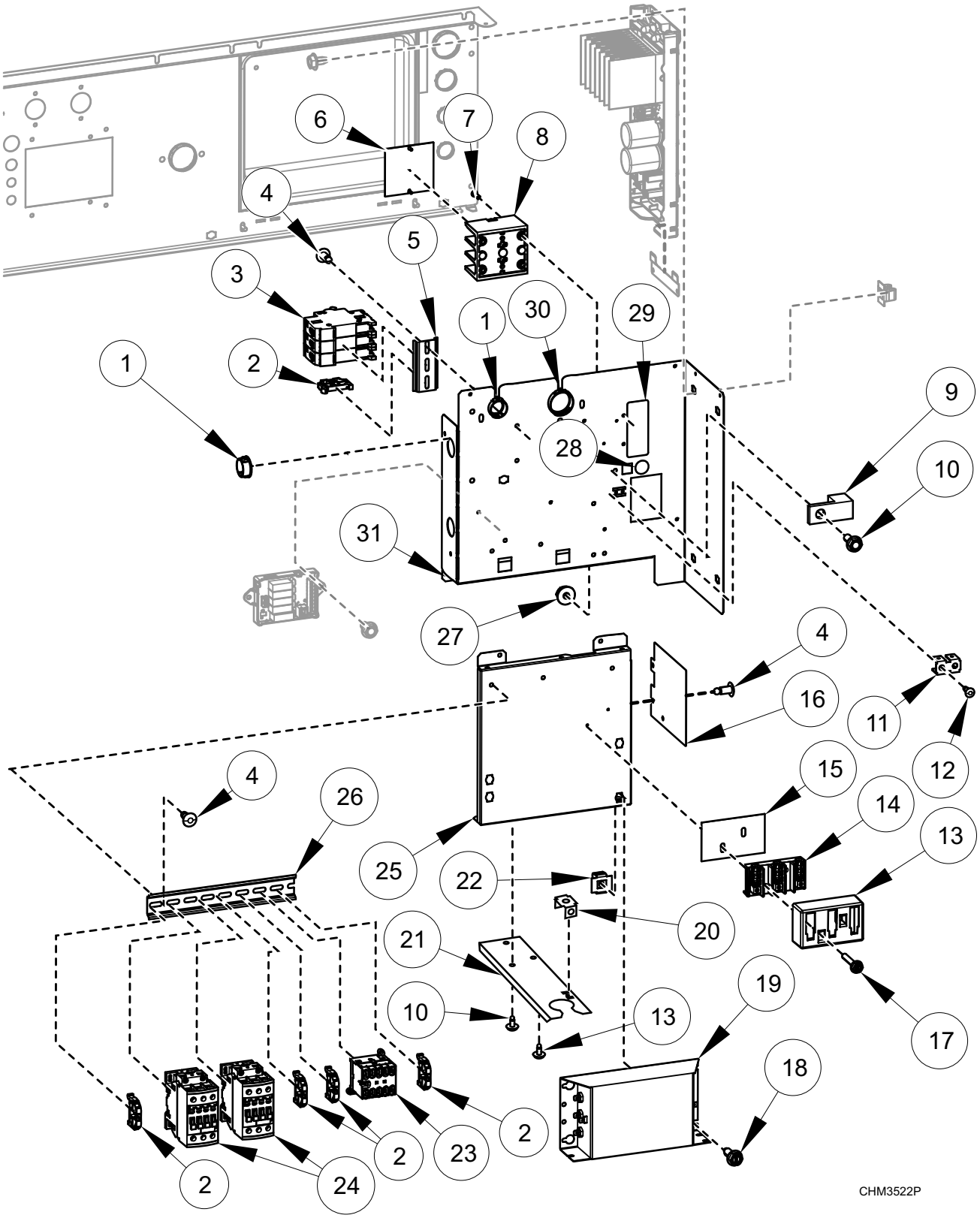

© Copyright, Alliance Laundry Systems LLC – DO NOT COPY or TRANSMIT

Inverter Drive Box - 40 Pound Models with B Voltage (Drawing 1 of 2)

REF	PART NO.	DESCRIPTION	COMMENTS
	F8567001	Drive Panel Base Assembly	Includes items 4, 11, 12, 16, 23, 24 and 29
	F8567002	Drive Panel Base Assembly	Electric heat; Includes items 4, 5, 11, 12, 16, 23, 24 and 29
	F8583501	Jumper	Circuit breaker jumper; Electric heat
	F8518405	Harness	Power TB1
	F8518604	Harness	Power drive
	F8528001	Harness	TB filter
	F8528003	Harness	CB filter; Electric heat
	F8528004	Harness	TB filter
	F8528006	Harness	TB2 filter
	F8619101	Power Harness	Power contactor; Electric heat
	F8619102	Harness	Power contactor; Electric heat
	F8662802	Filter Kit	Includes items 1, 14, 15, 17-20, harnesses and labels; B voltage
1	F140938	Snap Bushing	
2	F8449801	End Stop	
3	70488101	Circuit Breaker	3P; 25A; Electric heat
4	70058501	Pop Rivet	
5	B12315401	DIN Rail	7.5 mm x 35 mm x 72 mm; Electric heat
6	44014901P	Power Distribution Block Cover	Electric heat
7	39733	Screw	Electric heat
8	M413865	Power Distribution Block	Electric heat
9	M411283	Ground Lug Connector	
10	685837	Screw	
11	00622SG	Terminal	
12	M400003	Pop Rivet	
13	70333001	Terminal Block Shield	
14	430642	Terminal Block	
15	M413862	Insulator	
16	F8616901	Drive Shield	
17	51783	Screw	
18	F8206901	Screw	
19	F8591601	EMI Filter	
20	00621SG	Male Tab Terminal	IEC models
21	F8744301	Harness Support Bracket	IEC models
22	70030501	Expansion Clip	
23	70482601	Contactor	5.5kW/500V; 24VDC; Electric heat
24	70482701	Contactor	50A; 24VDC
25	F8530901	Contactor Tray	
26	M412689	DIN Rail	7.5 mm x 35 mm x 8.364 inch
27	44088001	Nut	
28	D516100	Label	
29	44286801	Label	Power input; L1, N
30	70346501	Bushing	
31	F8530801	Drive Terminal Tray	

© Copyright, Alliance Laundry Systems LLC – DO NOT COPY or TRANSMIT

Inverter Drive Box - 40 Pound Models with B Voltage (Drawing 2 of 2)

Design 8

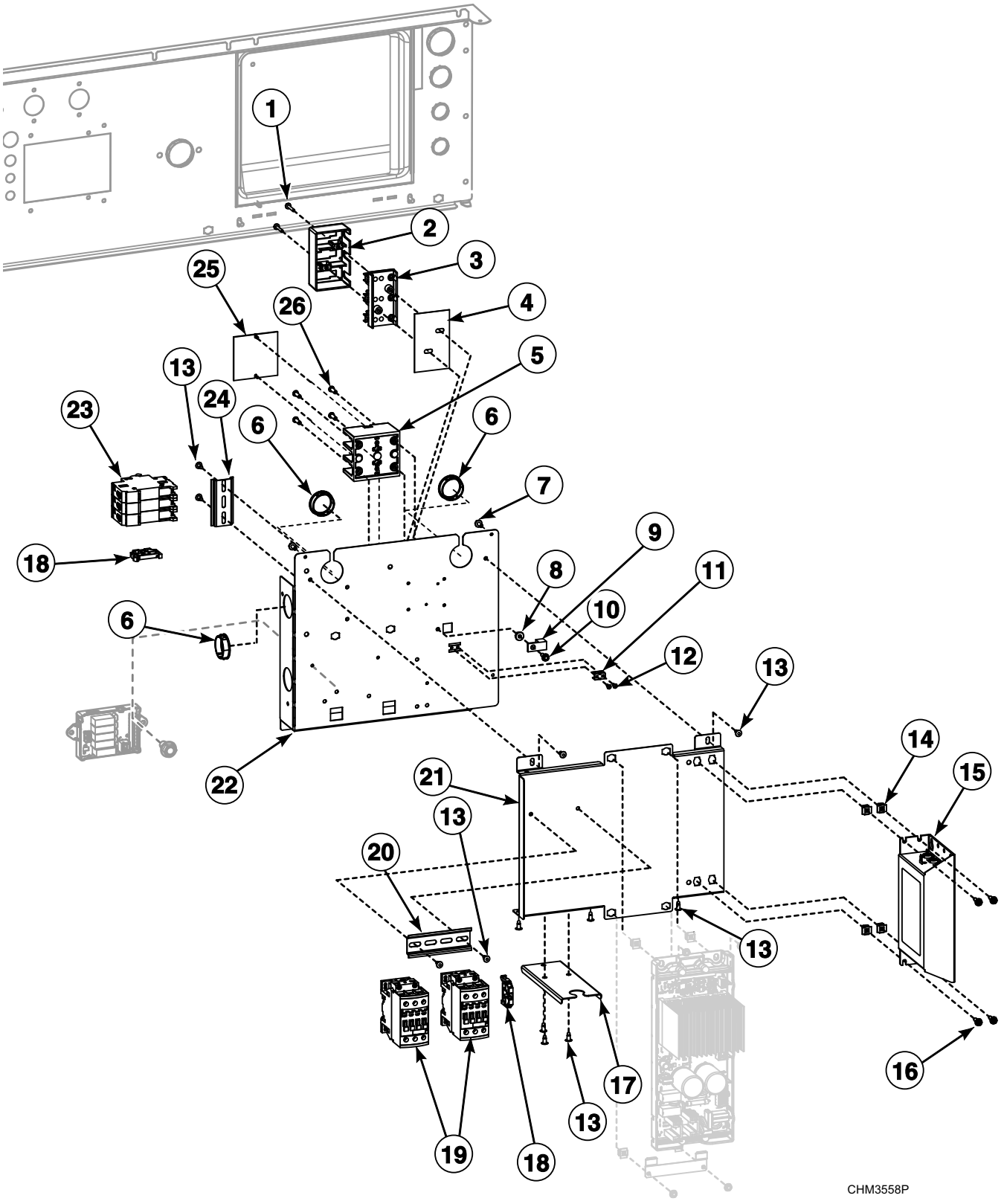

© Copyright, Alliance Laundry Systems LLC – DO NOT COPY or TRANSMIT

Inverter Drive Box - 40 Pound Models with B Voltage (Drawing 1 of 2)

REF	PART NO.	DESCRIPTION	COMMENTS
	F8583501	Jumper	Circuit breaker jumper; Electric heat
	F8773801	Harness	Power; TB1
	F8769401	Harness	Drive power
1	51783	Screw	
2	70333001	Terminal Block Shield	
3	430642	Terminal Block	
4	M413862	Insulator	
5	M413865	Power Distribution Block	Electric Heat
6	70346501	Bushing	
7	33562	Screw	
8	44088001	Nut	
9	M411283	Ground Lug Connector	
10	685837	Screw	
11	00622SG	Terminal	
12	M400003	Pop Rivet	
13	70058501	Pop Rivet	
14	70030501	Expansion Clip	
15	F8769701	EMI Filter	
16	F8206901	Screw	
17	F8773101	Harness Support Bracket	
18	F8449801	End Stop	
19	70482701	Contactor	
20	C003103	DIN Rail	
21	F8768301	Contactor Tray	
22	F8768201	Drive Terminal Tray	
23	70488101	Circuit Breaker	
24	B12315401	DIN Rail	
25	44014901P	Power Distribution Block Cover	
26	39733	Screw	

© Copyright, Alliance Laundry Systems LLC – DO NOT COPY or TRANSMIT

Inverter Drive Box - 40 Pound Models with N, P, Q, W, X and Y Voltage

Design 4, 6 and 7

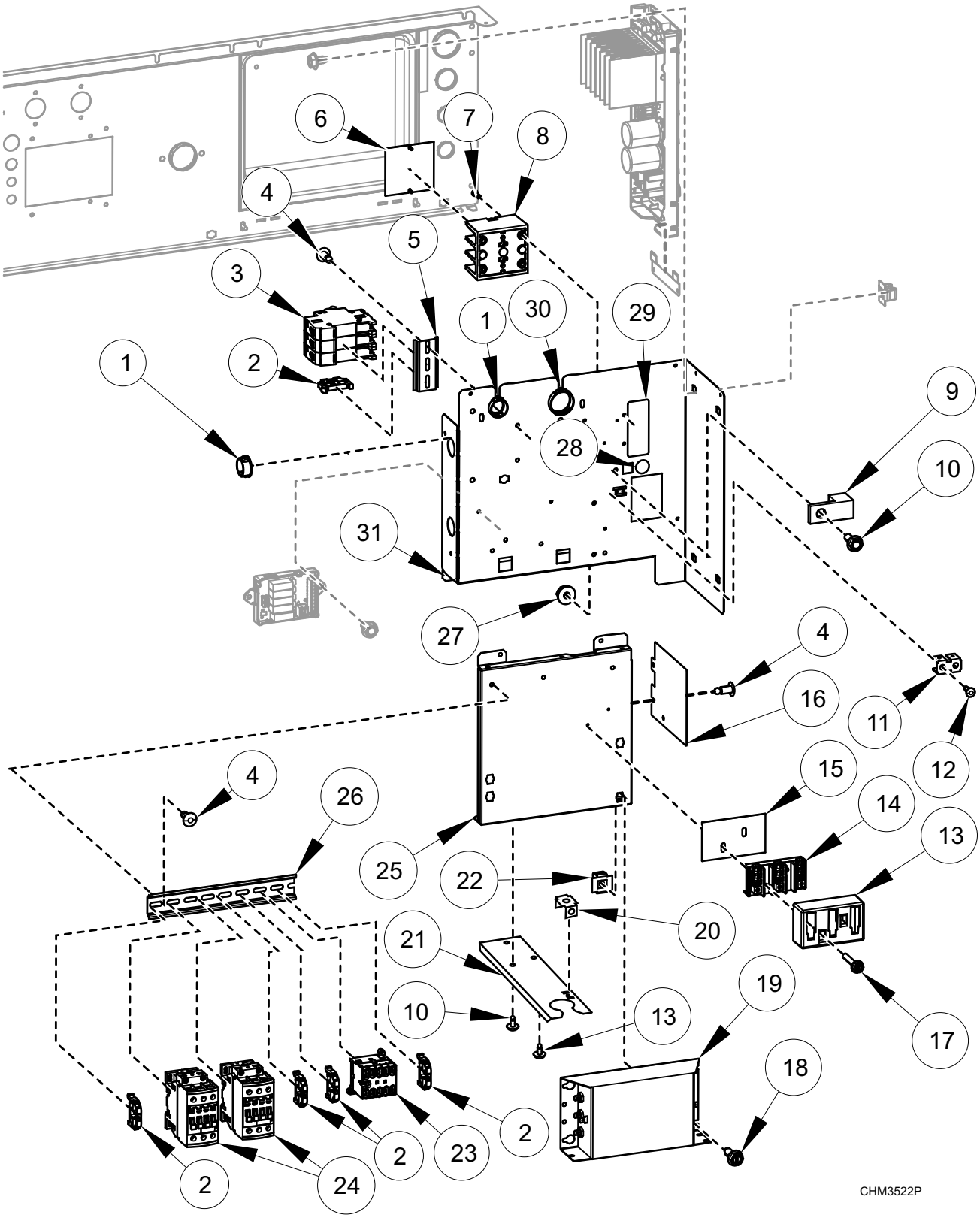

© Copyright, Alliance Laundry Systems LLC – DO NOT COPY or TRANSMIT

Inverter Drive Box - 40 Pound Models with N, P, Q, W, X and Y Voltage

REF	PART NO.	DESCRIPTION	COMMENTS
	F8567001	Drive Panel Base Assembly	Includes items 4, 11, 12, 16, 23, 24 and 29
	F8567002	Drive Panel Base Assembly	Electric heat; Includes items 4, 5, 11, 12, 16, 23, 24 and 29
	F8583501	Jumper	Circuit breaker jumper; Electric heat
	F8518401	Harness	Power TB1; W, X and Y voltage
	F8518501	Harness	Power TB1; N and P voltage
	F8518504	Harness	Power filter; N and P voltage
	F8518605	Harness	Power drive; Q, W, X, and Y voltage
	F8518606	Harness	Power drive; N and P voltage
	F8528001	Harness	TB filter
	F8528003	Harness	CB filter; Electric heat
	F8528005	Harness	TB2 Filter; N, P, Q, W, X, and Y voltage
	F8518503	Harness	Power CB; N and P voltage; Electric heat
	F8518403	Harness	Power CB; Q voltage; Electric heat
	F8619101	Power Harness	Power contactor; Electric heat
	F8619102	Harness	Power contactor; Electric heat
	F8662811	Filter Kit	Includes items 1, 14, 15, 17-20, harnesses and labels; Q voltage; Electric heat
	F8662812	Filter Kit	Includes items 1, 14, 15, 17-20, harnesses and labels; N and P voltage; Electric heat
	F8662804	Filter Kit	Includes items 1, 14, 15, 17-20, harnesses and labels; W, X and Y voltage
	F8662806	Filter Kit	Includes items 1, 14, 15, 17-20, harnesses and labels; N and P voltage
1	F140938	Snap Bushing	
2	F8449801	End Stop	
3	70488101	Circuit Breaker	3P; 25A; Electric heat
4	70058501	Pop Rivet	
5	B12315401	DIN Rail	7.5 mm x 35 mm x 72 mm; Electric heat
6	44014901P	Power Distribution Block Cover	Electric heat
7	39733	Screw	Electric heat
8	M413865	Power Distribution Block	Electric heat
9	M411283	Ground Lug Connector	
10	685837	Screw	
11	00622SG	Terminal	
12	M400003	Pop Rivet	
13	70333001	Terminal Block Shield	
14	430642	Terminal Block	
15	M413862	Insulator	
16	F8616901	Drive Shield	
17	51783	Screw	
18	F8206901	Screw	
19	F8591801	EMI Filter	Q, W, X and Y voltage
	F8637501	EMI Filter	N and P voltage
20	00621SG	Male Tab Terminal	IEC models
21	F8744301	Harness Support Bracket	IEC models
22	70030501	Expansion Clip	
23	70482601	Contactor	5.5kW/500V; 24VDC; Electric heat
24	70482701	Contactor	50A; 24VDC
25	F8530901	Contactor Tray	
26	M412689	DIN Rail	7.5 mm x 35 mm x 8.364 inch
27	44088001	Nut	
28	D516100	Label	
29	44286803	Label	Power input; L1, L2, L3; N and P voltage
	44286804	Wire Label	Power input; L1, L2/N; L1, L2, L3; W, X and Y voltage
30	70346501	Bushing	
31	F8530801	Drive Terminal Tray	

© Copyright, Alliance Laundry Systems LLC – DO NOT COPY or TRANSMIT

Inverter Drive Box - 40 Pound Models with Q and X Voltage

Design 8

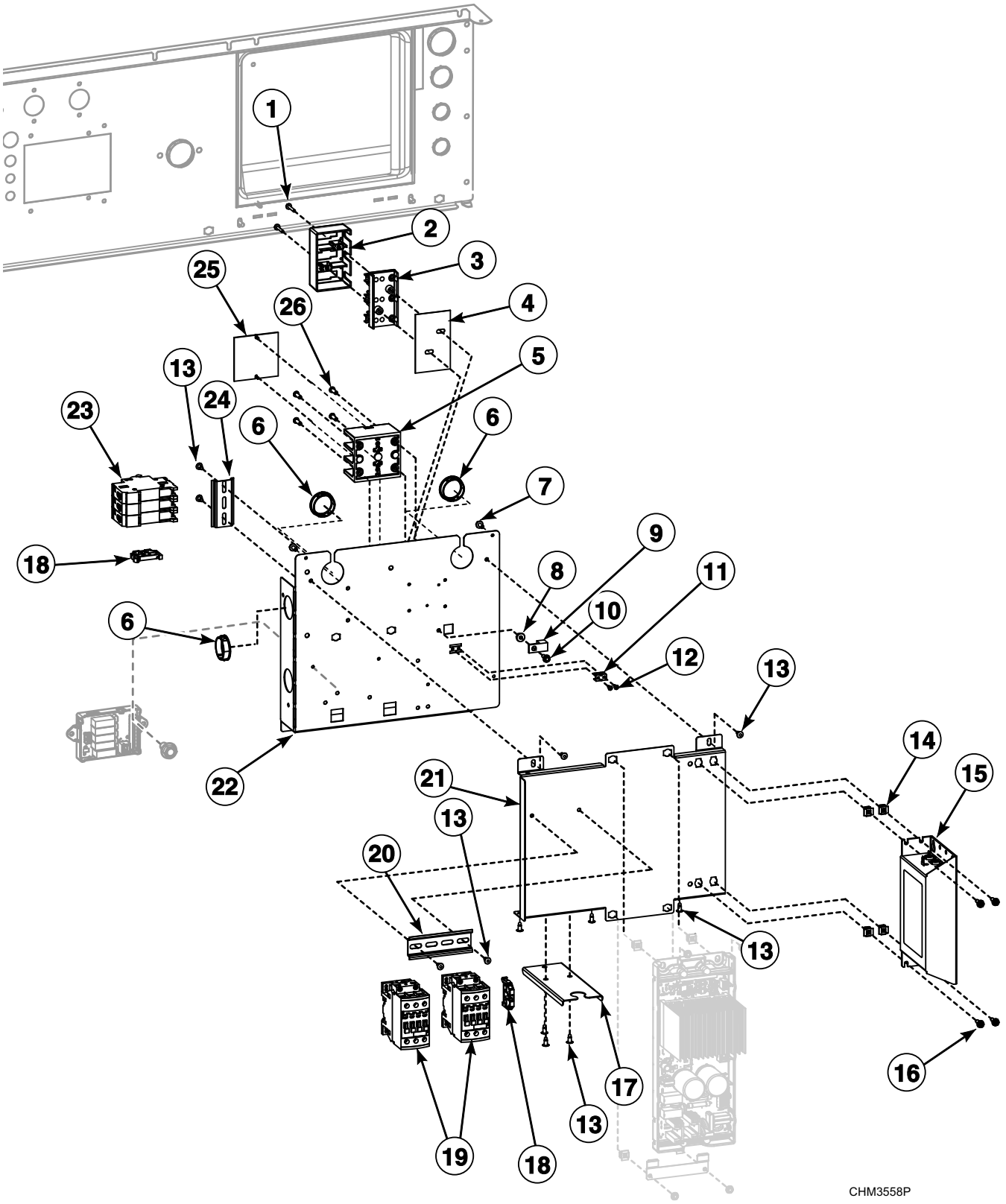

© Copyright, Alliance Laundry Systems LLC – DO NOT COPY or TRANSMIT

Inverter Drive Box - 40 Pound Models with Q and X Voltage

REF	PART NO.	DESCRIPTION	COMMENTS
	F8583501	Jumper	Circuit breaker jumper; Electric heat
	F8769402	Harness	Power TB1; Drive; X voltage
	F8773801	Harness	Power TB1; Control; X voltage
	F8773802	Harness	Power PDB/CB; Control; Q voltage
	F8780601	Harness	TB filter
	F8780602	Harness	PDB filter; Electric heat
	F8769404	Harness	Power CB; Drive; Q voltage
	F8780101	Harness	Filter to Drive
1	51783	Screw	
2	70333001	Terminal Block Shield	
3	430642	Terminal Block	
4	M413862	Insulator	
5	M413865	Power Distribution Block	Electric Heat
6	70346501	Bushing	
7	33562	Screw	
8	44088001	Nut	
9	M411283	Ground Lug Connector	
10	685837	Screw	
11	00622SG	Terminal	
12	M400003	Pop Rivet	
13	70058501	Pop Rivet	
14	70030501	Expansion Clip	
15	F8769701	EMI Filter	
16	F8206901	Screw	
17	F8773101	Harness Support Bracket	
18	F8449801	End Stop	
19	70482701	Contactor	
20	C003103	DIN Rail	
21	F8768301	Contactor Tray	
22	F8768201	Drive Terminal Tray	
23	70488101	Circuit Breaker	
24	B12315401	DIN Rail	
25	44014901P	Power Distribution Block Cover	
26	39733	Screw	

© Copyright, Alliance Laundry Systems LLC – DO NOT COPY or TRANSMIT

Inverter Drive Box - 60 Pound Models with Q and X Voltage (Drawing 1 of 2)

Design 4, 6 and 7

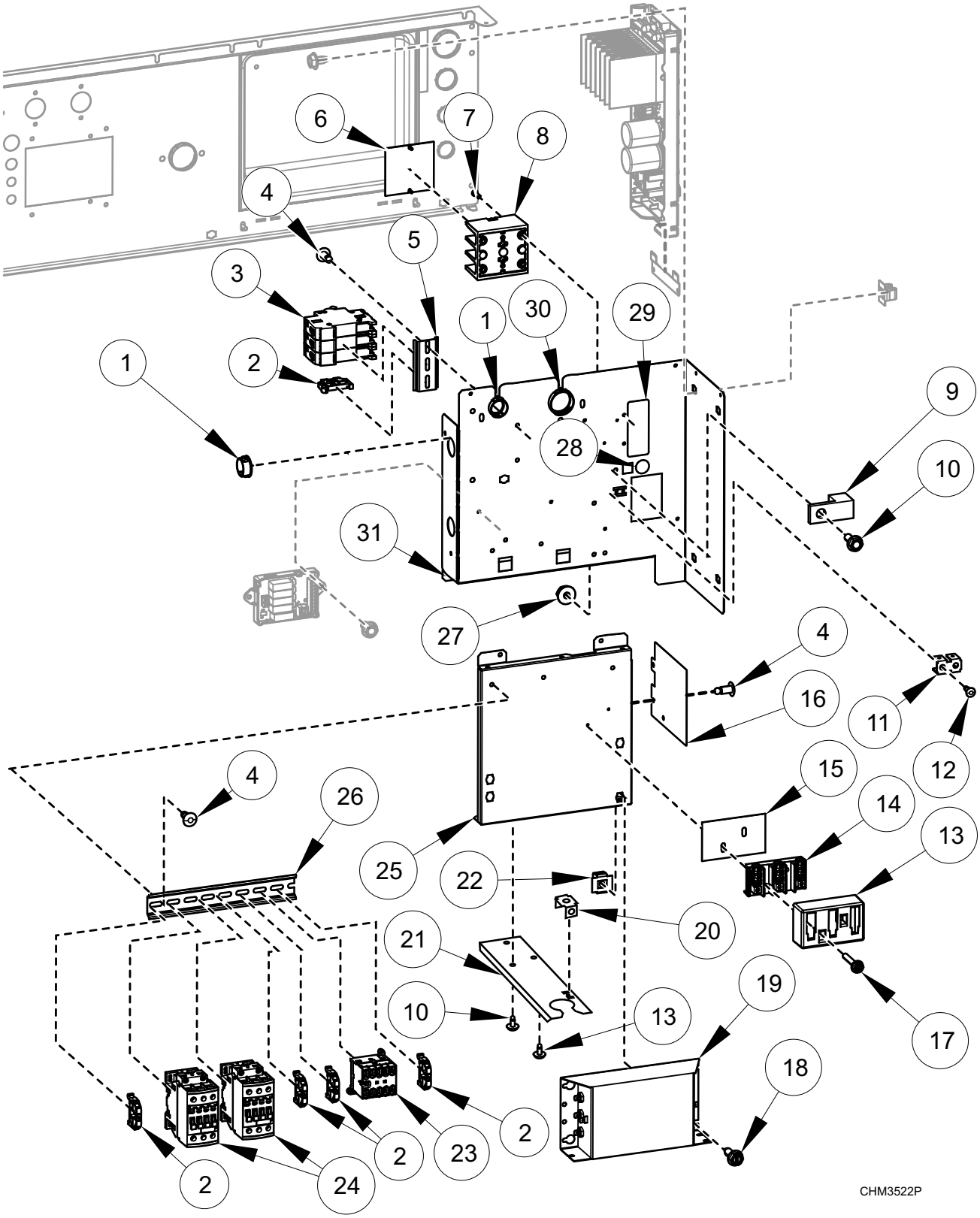

© Copyright, Alliance Laundry Systems LLC – DO NOT COPY or TRANSMIT

Inverter Drive Box - 60 Pound Models with Q and X Voltage (Drawing 1 of 2)

REF	PART NO.	DESCRIPTION	COMMENTS
	F8567003	Drive Panel Base Assembly	Includes items 4, 11, 12, 16, 23, 24 and 29
	F8567004	Drive Panel Base Assembly	Electric heat; Includes items 4, 5, 11, 12, 16, 23, 24 and 29
	F8583501	Jumper	Circuit breaker jumper; Electric heat
	F8518401	Harness	Power TB1; X voltage
	F8518404	Harness	Power filter
	F8518607	Harness	Power drive
	F8528001	Harness	TB filter
	F8528003	Harness	CB filter; Electric heat
	F8528005	Harness	TB2 Filter
	F8518403	Harness	Power CB; Q voltage; Electric heat
	F8619101	Power Harness	Power contactor; Electric heat
	F8619102	Harness	Power contactor; Electric heat
	F8662811	Filter Kit	Includes items 1, 14, 15, 17-20, harnesses and labels; Q voltage; Electric heat
	F8662804	Filter Kit	Includes items 1, 14, 15, 17-20, harnesses and labels; X voltage
1	F140938	Snap Bushing	
2	F8449801	End Stop	
3	70488101	Circuit Breaker	3P; 25A; Electric heat
4	70058501	Pop Rivet	
5	B12315401	DIN Rail	7.5 mm x 35 mm x 72 mm; Electric heat
6	44014901P	Power Distribution Block Cover	Electric heat
7	39733	Screw	Electric heat
8	M413865	Power Distribution Block	Electric heat
9	M411283	Ground Lug Connector	
10	685837	Screw	
11	00622SG	Terminal	
12	M400003	Pop Rivet	
13	70333001	Terminal Block Shield	
14	430642	Terminal Block	
15	M413862	Insulator	
16	F8616901	Drive Shield	
17	51783	Screw	
18	F8206901	Screw	
19	F8591801	EMI Filter	
20	00621SG	Male Tab Terminal	IEC models
21	F8744301	Harness Support Bracket	IEC models
22	70030501	Expansion Clip	
23	70482601	Contactor	5.5kW/500V; 24VDC
24	70482701	Contactor	50A; 24VDC
25	F8530901	Contactor Tray	
26	M412689	DIN Rail	7.5 mm x 35 mm x 8.364 inch
27	44088001	Nut	
28	D516100	Label	
29	44286804	Wire Label	Power input; L1, L2/N; L1, L2, L3; X voltage
30	70346501	Bushing	
31	F8530803	Drive Terminal Tray	

© Copyright, Alliance Laundry Systems LLC – DO NOT COPY or TRANSMIT

Inverter Drive Box - 60 Pound Models with Q and X Voltage (Drawing 2 of 2)

Design 8

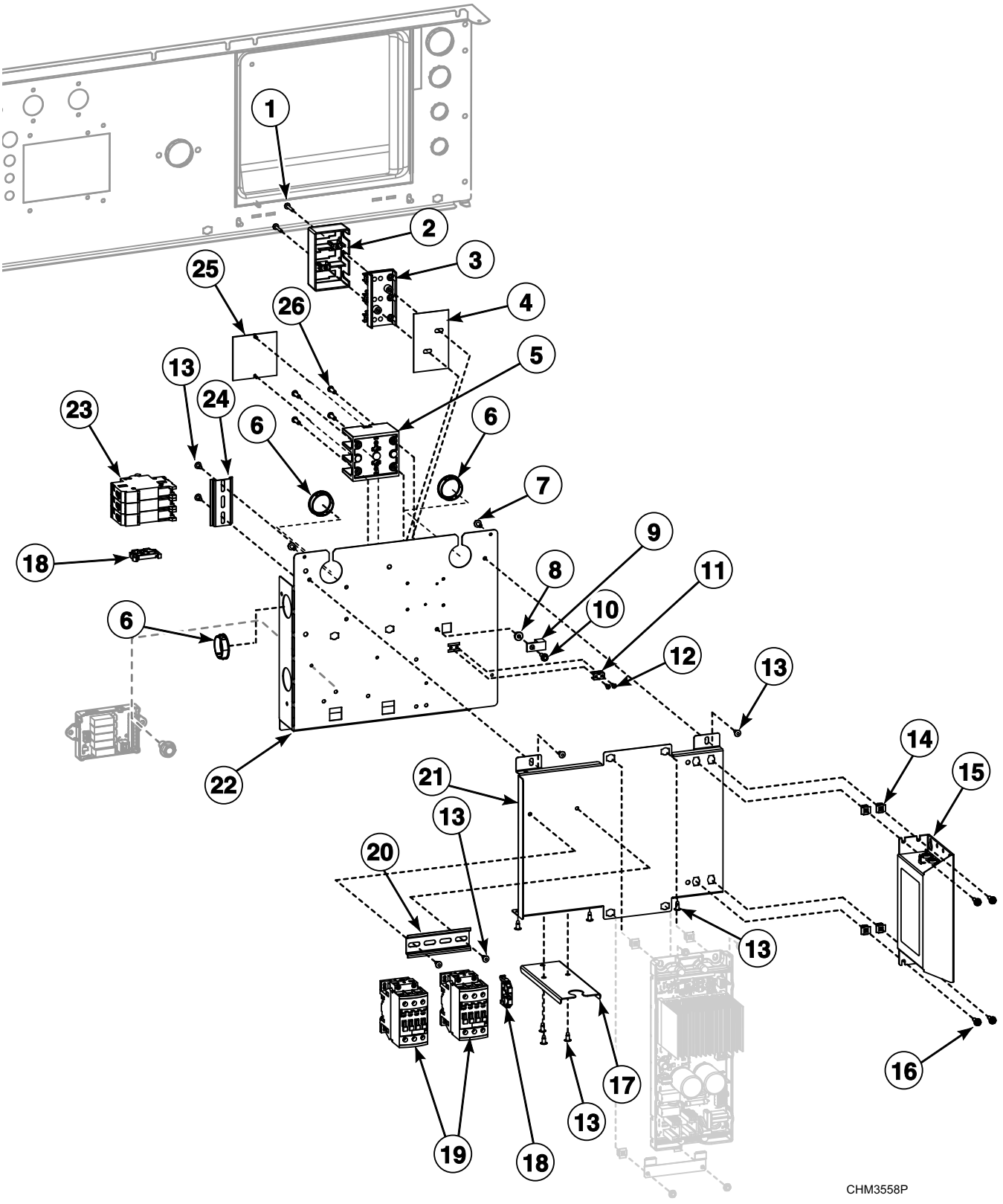

© Copyright, Alliance Laundry Systems LLC – DO NOT COPY or TRANSMIT

Inverter Drive Box - 60 Pound Models with Q and X Voltage (Drawing 2 of 2)

REF	PART NO.	DESCRIPTION	COMMENTS
	F8583501	Jumper	Circuit breaker jumper; Electric heat
	F8769402	Harness	Power TB1; Drive; X voltage
	F8780602	Harness	PDB filter; Electric heat
	F8773802	Harness	Power PDB/CB; Control; Q voltage
	F8780601	Harness	TB filter
	F8773801	Harness	Power TB1; Control; X voltage
	F8780101	Harness	Filter to Drive
	F8769404	Harness	Power CB; Q voltage; Drive
1	51783	Screw	
2	70333001	Terminal Block Shield	
3	430642	Terminal Block	
4	M413862	Insulator	
5	M413865	Power Distribution Block	Electric Heat
6	70346501	Bushing	
7	33562	Screw	
8	44088001	Nut	
9	M411283	Ground Lug Connector	
10	685837	Screw	
11	00622SG	Terminal	
12	M400003	Pop Rivet	
13	70058501	Pop Rivet	
14	70030501	Expansion Clip	
15	F8769701	EMI Filter	
16	F8206901	Screw	
17	F8773101	Harness Support Bracket	
18	F8449801	End Stop	
19	70482701	Contactor	
20	C003103	DIN Rail	
21	F8768301	Contactor Tray	
22	F8768201	Drive Terminal Tray	
23	70488101	Circuit Breaker	
24	B12315401	DIN Rail	
25	44014901P	Power Distribution Block Cover	
26	39733	Screw	

© Copyright, Alliance Laundry Systems LLC – DO NOT COPY or TRANSMIT

Inverter Drive Box - 60 Pound Models with N and P Voltage

Design 4, 6 and 7

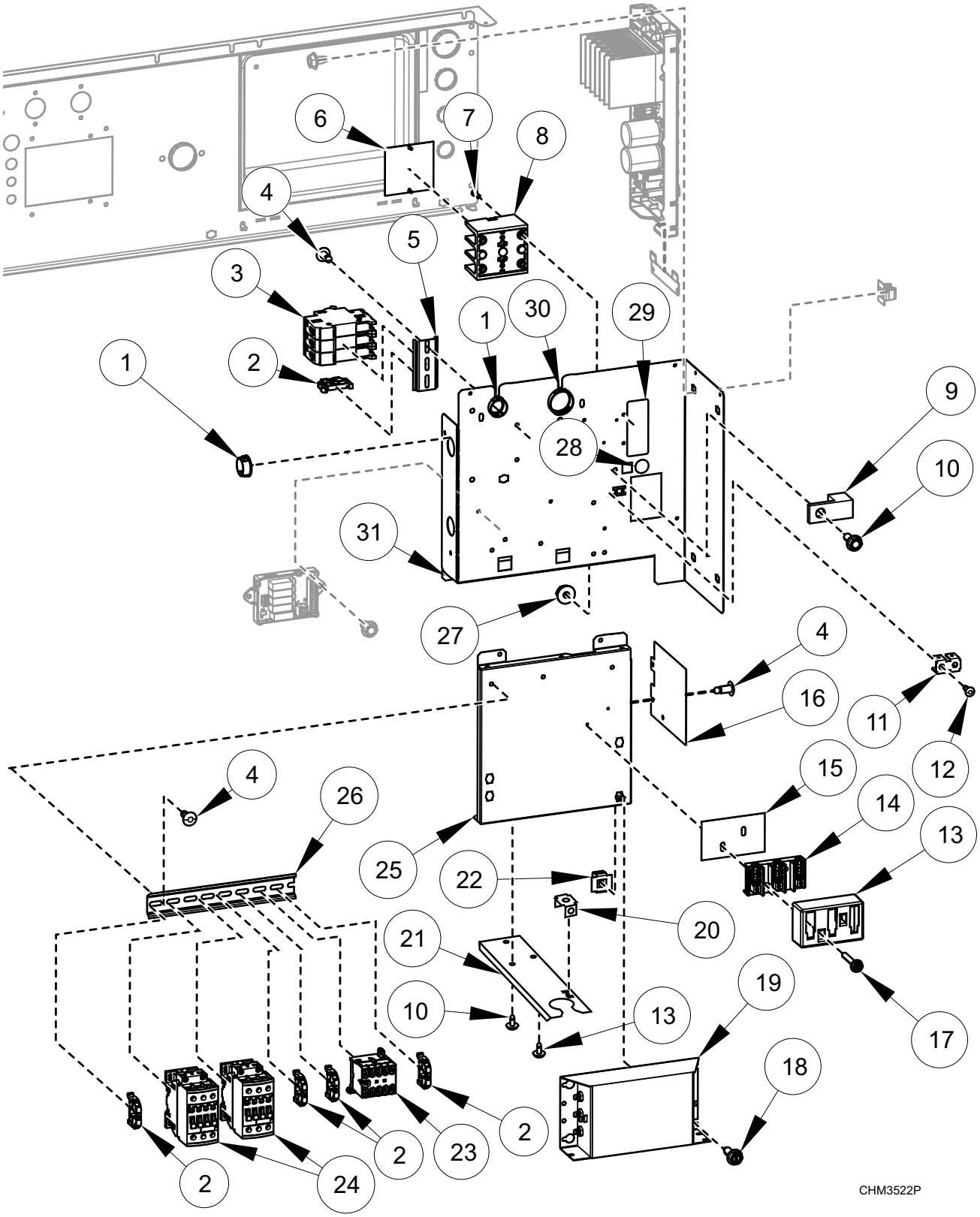

© Copyright, Alliance Laundry Systems LLC – DO NOT COPY or TRANSMIT

Inverter Drive Box - 60 Pound Models with N and P Voltage

REF	PART NO.	DESCRIPTION	COMMENTS
	F8567003	Drive Panel Base Assembly	Includes items 4, 11, 12, 16, 23, 24 and 29
	F8567004	Drive Panel Base Assembly	Electric heat; Includes items 4, 5, 11, 12, 16, 23, 24 and 29
	F8583501	Jumper	Circuit breaker jumper; Electric heat
	F8518501	Harness	Power TB1; N and P voltage
	F8518503	Harness	Power CB; Electric heat
	F8518504	Harness	Power filter
	F8518606	Harness	Power drive
	F8528001	Harness	TB filter
	F8528003	Harness	CB filter; Electric heat
	F8528005	Harness	TB2 Filter
	F8619101	Power Harness	Power contactor; Electric heat
	F8619102	Harness	Power contactor; Electric heat
	F8662812	Filter Kit	Includes items 1, 14, 15, 17-20, harnesses and labels; Electric heat
	F8662806	Filter Kit	Includes items 1, 14, 15, 17-20, harnesses and labels
1	F140938	Snap Bushing	
2	F8449801	End Stop	
3	70488101	Circuit Breaker	3P; 25A; Electric heat
4	70058501	Pop Rivet	
5	B12315401	DIN Rail	7.5 mm x 35 mm x 72 mm; Electric heat
6	44014901P	Power Distribution Block Cover	Electric heat
7	39733	Screw	Electric heat
8	M413865	Power Distribution Block	Electric heat
9	M411283	Ground Lug Connector	
10	685837	Screw	
11	00622SG	Terminal	
12	M400003	Pop Rivet	
13	70333001	Terminal Block Shield	
14	430642	Terminal Block	
15	M413862	Insulator	
16	F8616901	Drive Shield	
17	51783	Screw	
18	F8206901	Screw	
19	F8637501	EMI Filter	
20	00621SG	Male Tab Terminal	IEC models
21	F8744301	Harness Support Bracket	IEC models
22	70030501	Expansion Clip	
23	70482601	Contactor	5.5kW/500V; 24VDC
24	70482701	Contactor	50A; 24VDC
25	F8530901	Contactor Tray	
26	M412689	DIN Rail	7.5 mm x 35 mm x 8.364 inch
27	44088001	Nut	
28	D516100	Label	
29	44286803	Label	Power input; L1, L2, L3
30	70346501	Bushing	
31	F8530803	Drive Terminal Tray	

© Copyright, Alliance Laundry Systems LLC – DO NOT COPY or TRANSMIT

Inverter Drive Box - N and P Voltage

Design 8

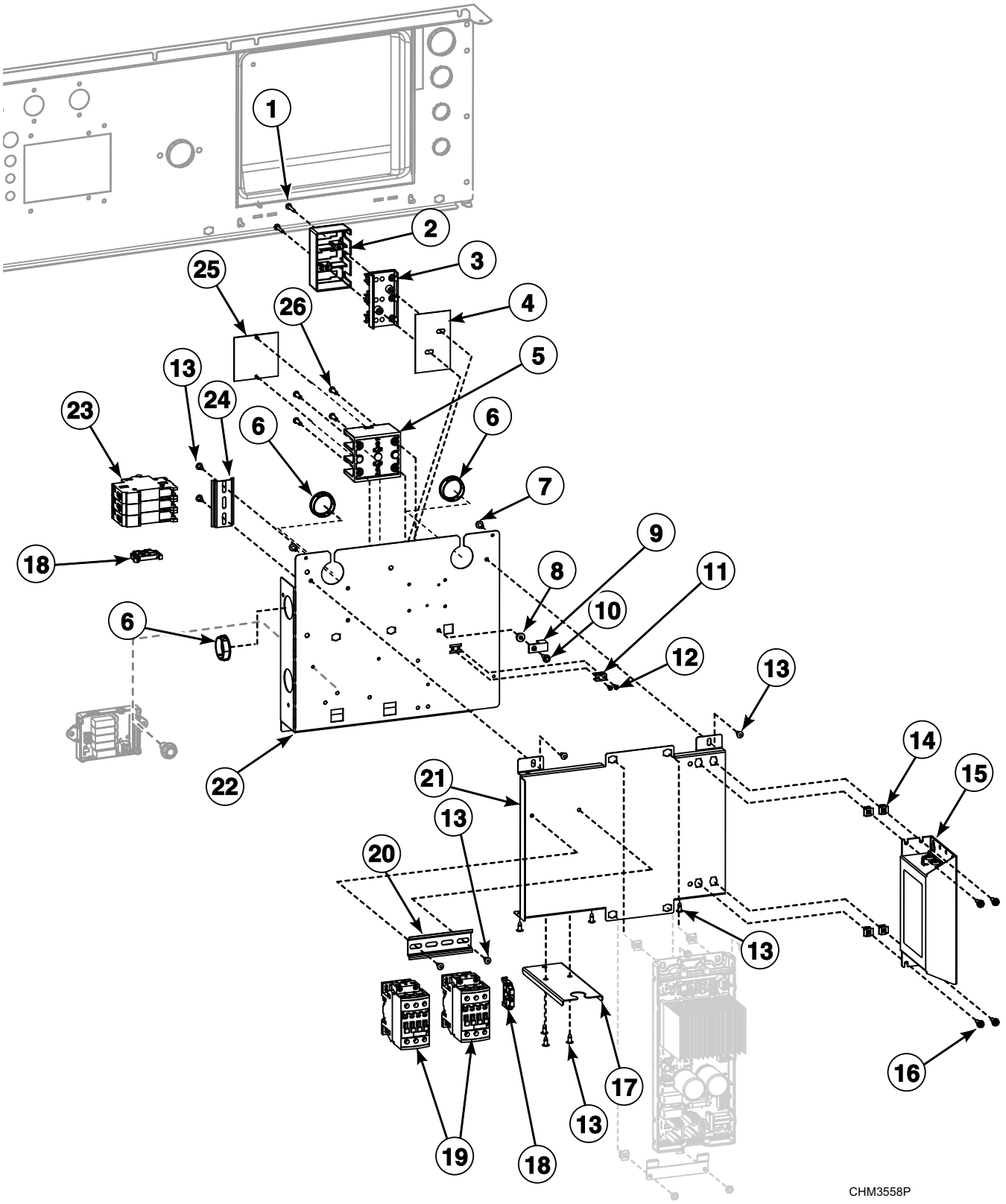

© Copyright, Alliance Laundry Systems LLC – DO NOT COPY or TRANSMIT

Inverter Drive Box - N and P Voltage

REF	PART NO.	DESCRIPTION	COMMENTS
	F8773401	Harness	Power drive
	F8773402	Harness	Power drive; PDB Electric Heat
	F8773403	Harness	Power drive; CB Electric Heat
	F8773803	Harness	Power TB1; NP voltage
	F8773804	Harness	Power PDB/CB; NP voltage
	F8780601	Harness	TB filter
	F8780602	Harness	PDB filter
	F8780603	Harness	CB filter
	F8780102	Harness	Power drive; IEC
	F8619101	Power Harness	Power Contactor
	F8619102	Harness	Power Contactor; IEC
1	51783	Screw	
2	70333001	Terminal Block Shield	
3	430642	Terminal Block	
4	M413862	Insulator	
5	M413865	Power Distribution Block	Electric Heat
6	70346501	Bushing	
7	33562	Screw	
8	44088001	Nut	
9	M411283	Ground Lug Connector	
10	685837	Screw	
11	00622SG	Terminal	
12	M400003	Pop Rivet	
13	70058501	Pop Rivet	
14	70030501	Expansion Clip	
15	F8769701	EMI Filter	
16	F8206901	Screw	
17	F8773101	Harness Support Bracket	
18	F8449801	End Stop	
19	70482701	Contactor	
20	C003103	DIN Rail	
21	F8768301	Contactor Tray	
22	F8768201	Drive Terminal Tray	
23	70488101	Circuit Breaker	
24	B12315401	DIN Rail	
25	44014901P	Power Distribution Block Cover	
26	39733	Screw	

© Copyright, Alliance Laundry Systems LLC – DO NOT COPY or TRANSMIT

External Supply Kit (Drawing 1 of 2)

Design 4, 6 and 7

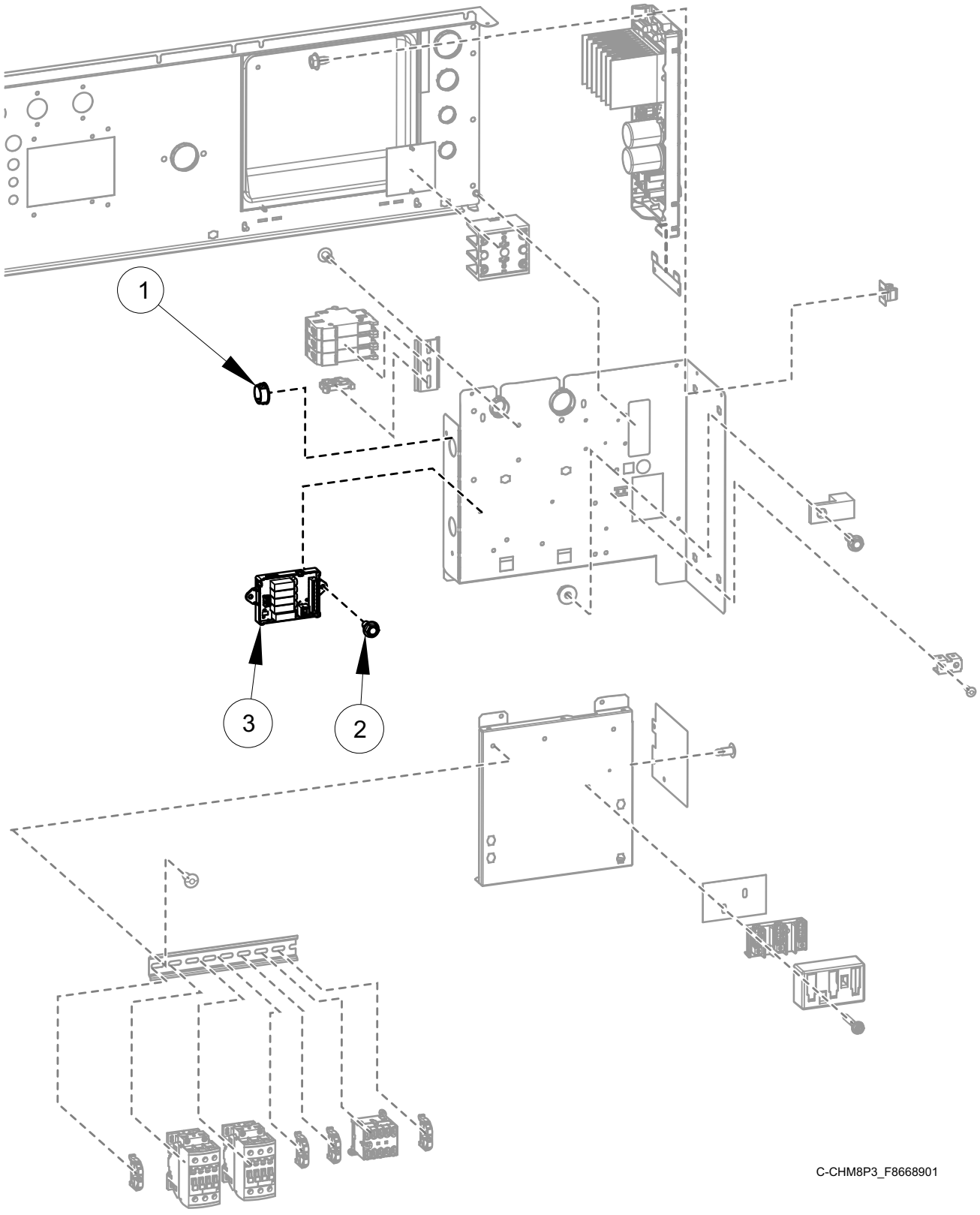

© Copyright, Alliance Laundry Systems LLC – DO NOT COPY or TRANSMIT

External Supply Kit (Drawing 1 of 2)

REF	PART NO.	DESCRIPTION	COMMENTS
	F8520601	Harness	Communication; 20 and 30 pound models
	F8520602	Harness	Communication; 40 and 60 pound models
	F8528203	Harness	Power; B voltage
	F8528204	Harness	Power; N, P, Q, W, X and Y voltage
	F8662505	External Supply Kit	20 and 30 pound models with B voltage; Includes items 1-3, F8520601 Harness, F8528203 Harness, 202758 Transformer and labels; 4 out
	F8662506	External Supply Kit	40 pound models with B voltage; Includes items 1-3, F8520602 Harness, F8528203 Harness, 202758 Transformer and labels; 4 out
	F8662507	External Supply Kit	20 and 30 pound models with N, P, Q and X voltage; Includes items 1-3, F8520601 Harness, F8528204 Harness, 202758 Transformer and labels; 4 out
	F8662508	External Supply Kit	40 and 60 pound models with N, P, Q and X voltage; Includes items 1-3, F8520602 Harness, F8528204 Harness, 202758 Transformer and labels; 4 out
1	F140938	Snap Bushing	
2	430497	Screw	
3	804528	Chemical Injection Control	5 output
	70493102	Connector	9 pin; H2

© Copyright, Alliance Laundry Systems LLC – DO NOT COPY or TRANSMIT

External Supply Kit (Drawing 2 of 2)

Design 8

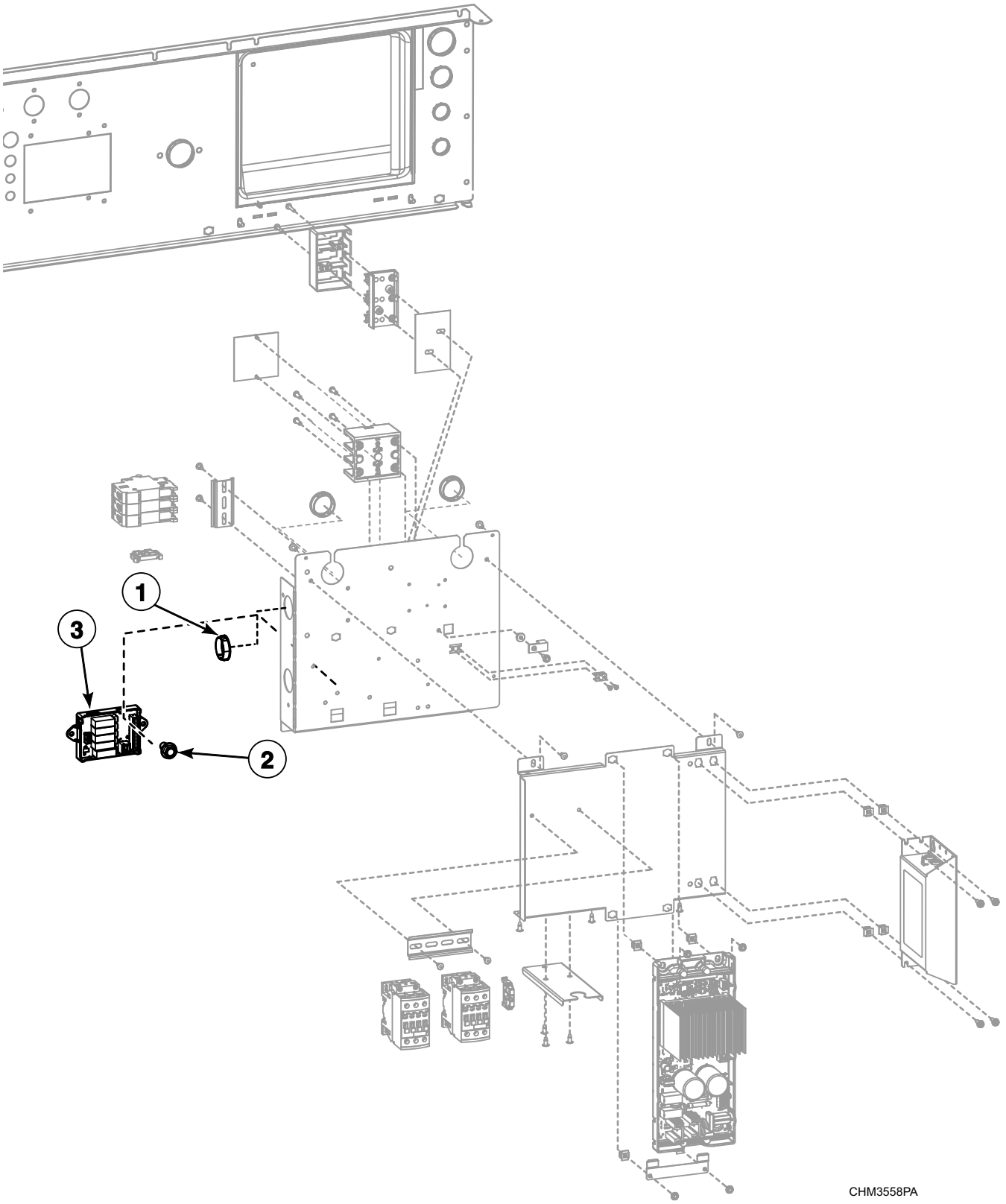

© Copyright, Alliance Laundry Systems LLC – DO NOT COPY or TRANSMIT

External Supply Kit (Drawing 2 of 2)

REF	PART NO.	DESCRIPTION	COMMENTS
	F8520601	Harness	Communication; 20 and 30 pound models
	F8520602	Harness	Communication; 40 and 60 pound models
	F8528203	Harness	Power; B voltage
	F8528204	Harness	Power; N, P, Q, W, X and Y voltage
	F8662505	External Supply Kit	20 and 30 pound models with B voltage; Includes items 1-3, F8520601 Harness, F8528203 Harness, 202758 Transformer and labels; 4 out
	F8662506	External Supply Kit	40 pound models with B voltage; Includes items 1-3, F8520602 Harness, F8528203 Harness, 202758 Transformer and labels; 4 out
	F8662507	External Supply Kit	20 and 30 pound models with N, P, Q and X voltage; Includes items 1-3, F8520601 Harness, F8528204 Harness, 202758 Transformer and labels; 4 out
	F8662508	External Supply Kit	40 and 60 pound models with N, P, Q and X voltage; Includes items 1-3, F8520602 Harness, F8528204 Harness, 202758 Transformer and labels; 4 out
1	F140938	Snap Bushing	
2	430497	Screw	
3	804528	Chemical Injection Control	5 output
	70493102	Connector	9 pin; H2

© Copyright, Alliance Laundry Systems LLC – DO NOT COPY or TRANSMIT

Inverter Drive (Drawing 1 of 2)

Design 4, 6 and 7

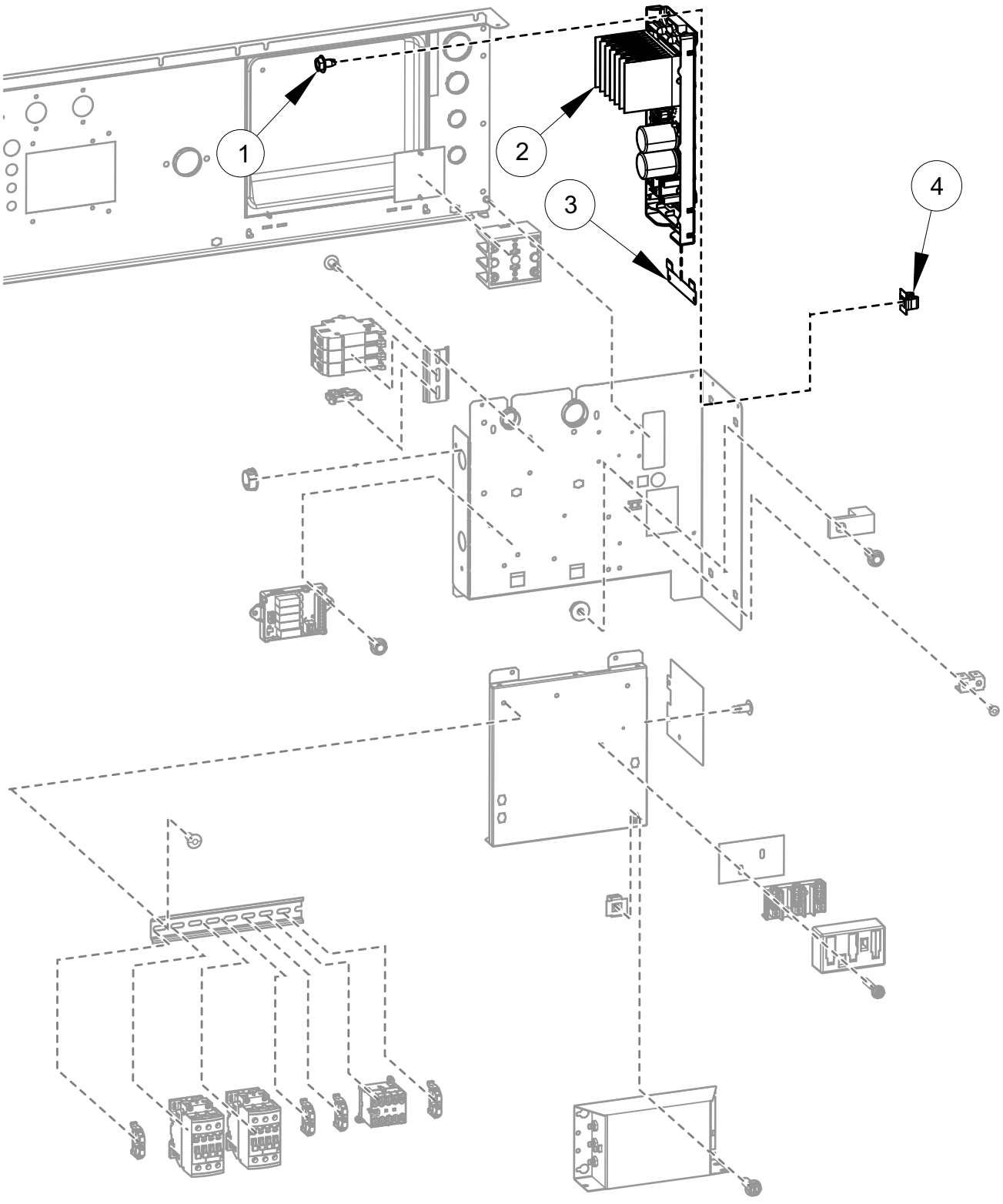

© Copyright, Alliance Laundry Systems LLC – DO NOT COPY or TRANSMIT

Inverter Drive (Drawing 1 of 2)

REF	PART NO.	DESCRIPTION	COMMENTS
	F8519202	Drive Communication Harness	20 and 30 pound models; 40 and 60 pound models with N and P voltage; Electric heat
	F8519203	Drive Communication Harness	40 and 60 pound models with Q voltage; Electric heat
	F8519201	Drive Communication Harness	Standard
	F8519204	Drive Communication Harness	Steam heat
	F8518605	Harness	Power drive; 20, 30 and 40 pound models with Q, W, X and Y voltage; EMI filter
	F8518607	Harness	60 pound models with Q and X voltage; EMI filter
	F8518606	Harness	Power drive; N and P voltage; EMI filter
	F8518602	Drive Power Harness	Q, W, X and Y voltage
	F8518603	Drive Power Harness	N and P voltage
	F8518601	Drive Power Harness	B voltage
1	D503688	Screw	
2	F8496001	Drive Assembly	20, 30 and 40 pound models; N and P-voltage; 2 hp; 480 Volt
	F8782301	Drive Kit	20, 30 and 40 pound models; B, Q, W X and Y-voltage; 2 hp; 120/240 Volt
	F8496301P	Drive Assembly	60 pound models; Q and X-voltage; 3 hp; 240 Volt
	F8496901P	Drive Assembly	60 pound models; N and P-voltage; 5 hp; 480 Volt
3	F8322401	Drive Mounting Bracket	2 included with N and P voltage
4	70030501	Expansion Clip	

© Copyright, Alliance Laundry Systems LLC – DO NOT COPY or TRANSMIT

Inverter Drive (Drawing 2 of 2)

Design 8

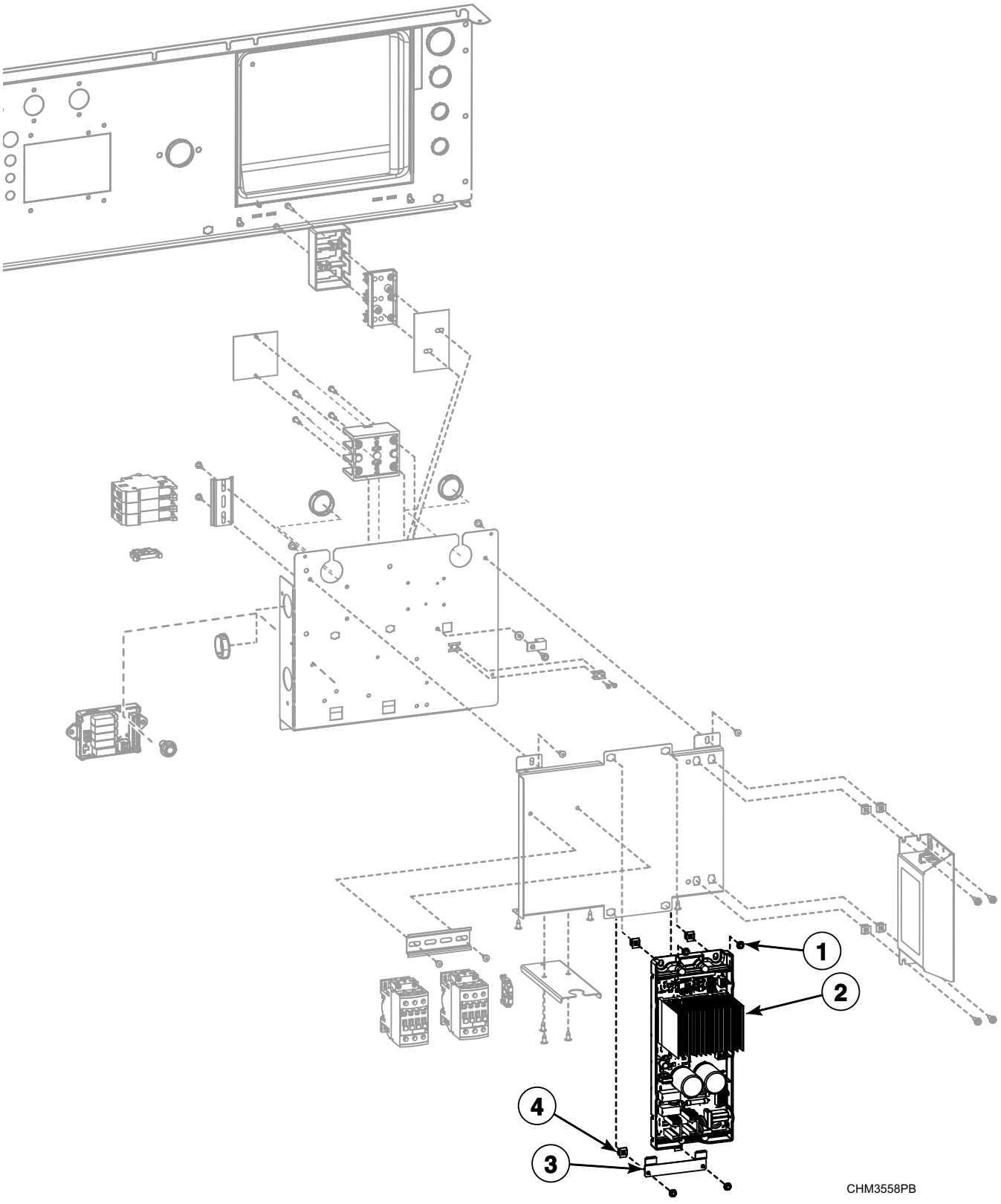

© Copyright, Alliance Laundry Systems LLC – DO NOT COPY or TRANSMIT

Inverter Drive (Drawing 2 of 2)

REF	PART NO.	DESCRIPTION	COMMENTS
	F8773401	Harness	60 pound models; N and P voltage; Drive power
1	D503688	Screw	
2	F8764701P	Drive Assembly	20, 30 and 40 pound models; B, Q, W X and Y voltage; 2 hp; 120/240 Volt
	F8764702P	Drive Assembly	60 pound models; Q and X voltage; 3 hp; 240 Volt
	F8764801	Drive Assembly	60 pound models; 5 hp; 240 Volt
	F8764901	Drive Assembly	60 pound models; 5 hp; 480 Volt
3	F8322401	Drive Mounting Bracket	2 included with N and P voltage
4	70030501	Expansion Clip	

© Copyright, Alliance Laundry Systems LLC – DO NOT COPY or TRANSMIT

Front Panels and Control Panel - Design 4

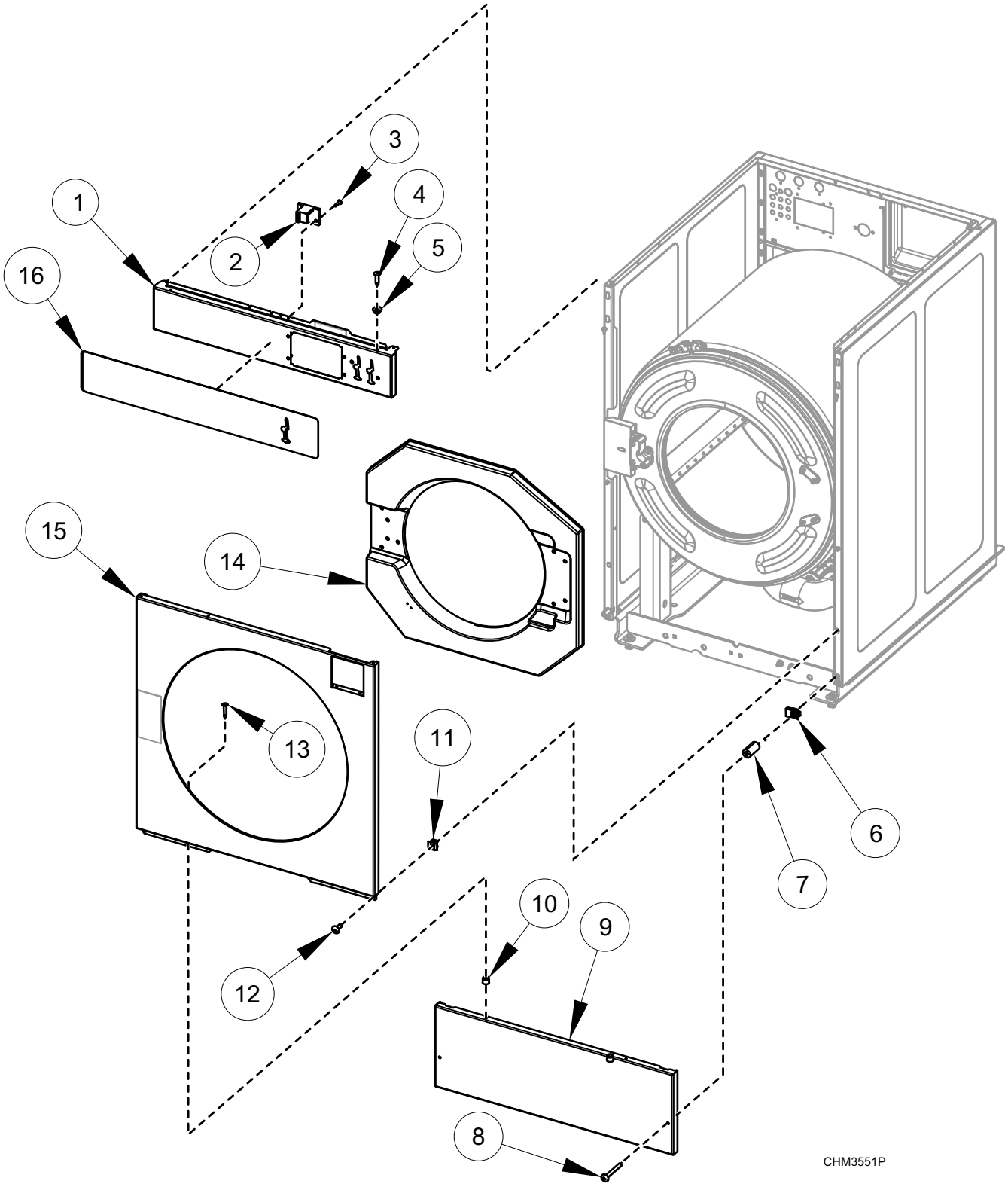

© Copyright, Alliance Laundry Systems LLC – DO NOT COPY or TRANSMIT

Front Panels and Control Panel - Design 4

REF	PART NO.	DESCRIPTION	COMMENTS
	F8535501	Screw	Attaches front panel to coin box
1	F8523701	Control Panel Assembly	20 pound models
	F8523801	Control Panel Assembly	30 pound models
	F8523901	Control Panel Assembly	40 pound models
	F8553701	Control Panel Assembly	60 pound models
2	F8201001	Top Cover Latch	
3	F431215	Pop Rivet	
4	70412601	Pop Rivet	
5	F8201101	Washer	
6	36020	Nut	
7	F8609701	Access Panel Retaining Spacer	
8	F8589501	Screw	
9	F8524001	Access Panel	20 pound models
	F8524101	Access Panel	30 pound models
	F8524201	Access Panel	40 pound models
	F8553901	Access Panel	60 pound models
10	56079	Panel Locator	
11	70030501	Expansion Clip	
12	F8117601	Screw	
13	M412763	Rivet	
14	F8658701	Door Bezel	20 pound models
	F8658901	Door Bezel	30 pound models
	F8659101	Door Bezel	40 and 60 pound models
15	F8524301	Front Panel	20 pound models
	F8524401	Front Panel	30 pound models
	F8524501	Front Panel	40 pound models
	F8554001	Front Panel	60 pound models
16	F8641605	Overlay	Single coin
	F8641602	Overlay	Dual coin
	F8641601	Overlay	Electronic coin meter

© Copyright, Alliance Laundry Systems LLC – DO NOT COPY or TRANSMIT

Front Panels and Control Panel - Design 6

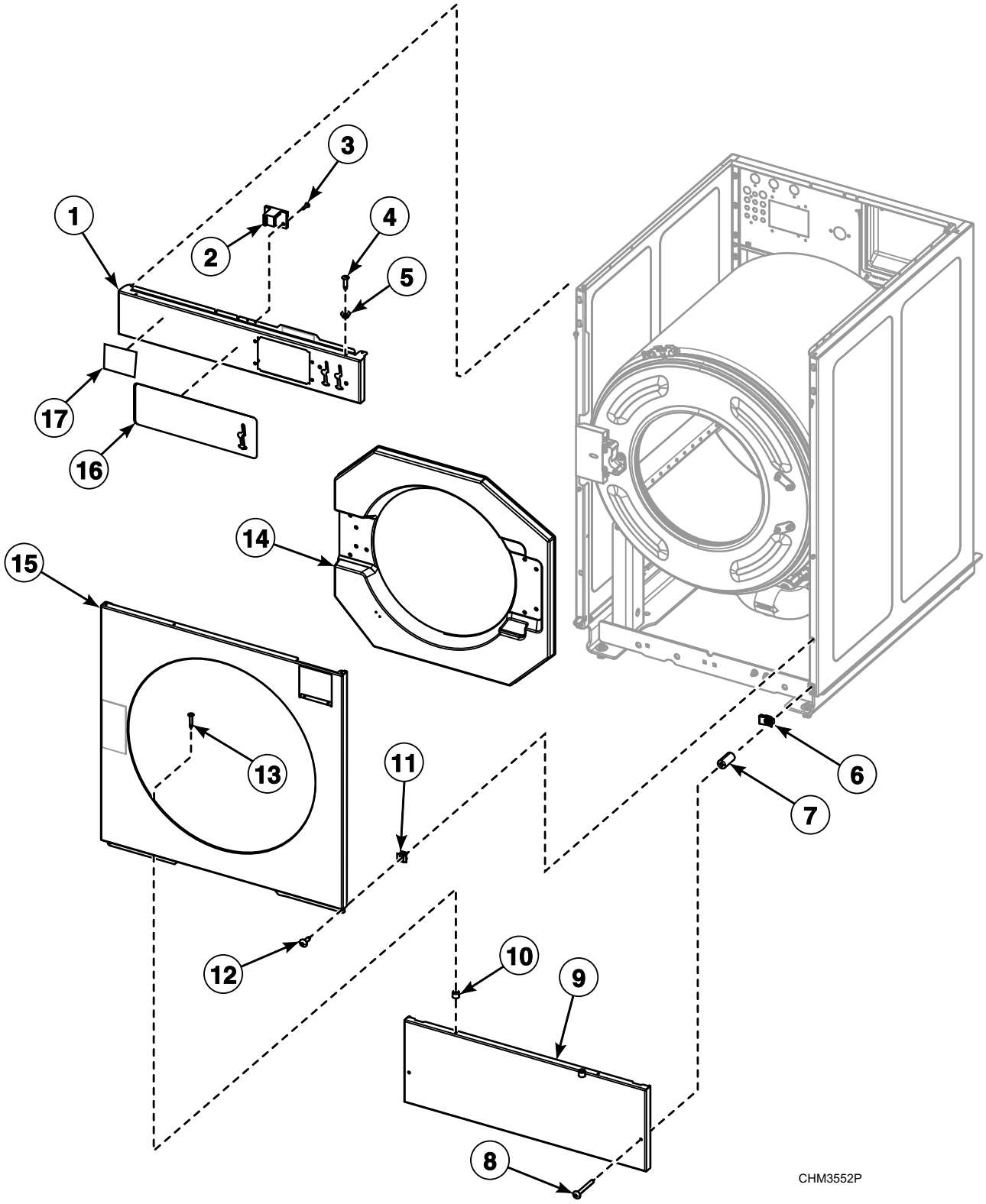

© Copyright, Alliance Laundry Systems LLC – DO NOT COPY or TRANSMIT

Front Panels and Control Panel - Design 6

REF	PART NO.	DESCRIPTION	COMMENTS
	F8535501	Screw	Attaches front panel to coin box
1	F8697101	Control Panel Assembly	20 pound models
	F8697201	Control Panel Assembly	30 pound models
	F8697301	Control Panel Assembly	40 pound models
	F8697401	Control Panel Assembly	60 pound models
2	F8201001	Top Cover Latch	
3	F431215	Pop Rivet	
4	70412601	Pop Rivet	
5	F8201101	Washer	
6	36020	Nut	
7	F8609701	Access Panel Retaining Spacer	
8	F8589501	Screw	
9	F8524001	Access Panel	20 pound models
	F8524101	Access Panel	30 pound models
	F8524201	Access Panel	40 pound models
	F8553901	Access Panel	60 pound models
10	56079	Panel Locator	
11	70030501	Expansion Clip	
12	F8117601	Screw	
13	M412763	Rivet	
14	F8658701	Door Bezel	20 pound models
	F8658901	Door Bezel	30 pound models
	F8659101	Door Bezel	40 and 60 pound models
15	F8686001	Front Panel	20 pound models
	F8686101	Front Panel	30 pound models
	F8685301	Front Panel	40 pound models
	F8686201	Front Panel	60 pound models
16	F8693701	Overlay	20 pound models; Single coin
	F8693702	Overlay	20 pound models; Dual coin
	F8693705	Overlay	20 pound models; Electronic coin drop
	F8693801	Overlay	30 pound models; Single coin
	F8693802	Overlay	30 pound models; Dual coin
	F8693805	Overlay	30 pound models; Electronic coin drop
	F8693901	Overlay	40 pound models; Single coin
	F8693902	Overlay	40 pound models; Dual coin
	F8693905	Overlay	40 pound models; Electronic coin drop
	F8694001	Overlay	60 pound models; Single coin
	F8694002	Overlay	60 pound models; Dual coin
	F8694005	Overlay	60 pound models; Electronic coin drop
17	F8688801	Nameplate	

© Copyright, Alliance Laundry Systems LLC – DO NOT COPY or TRANSMIT

Front Panels and Control Panel - Design 7 and 8

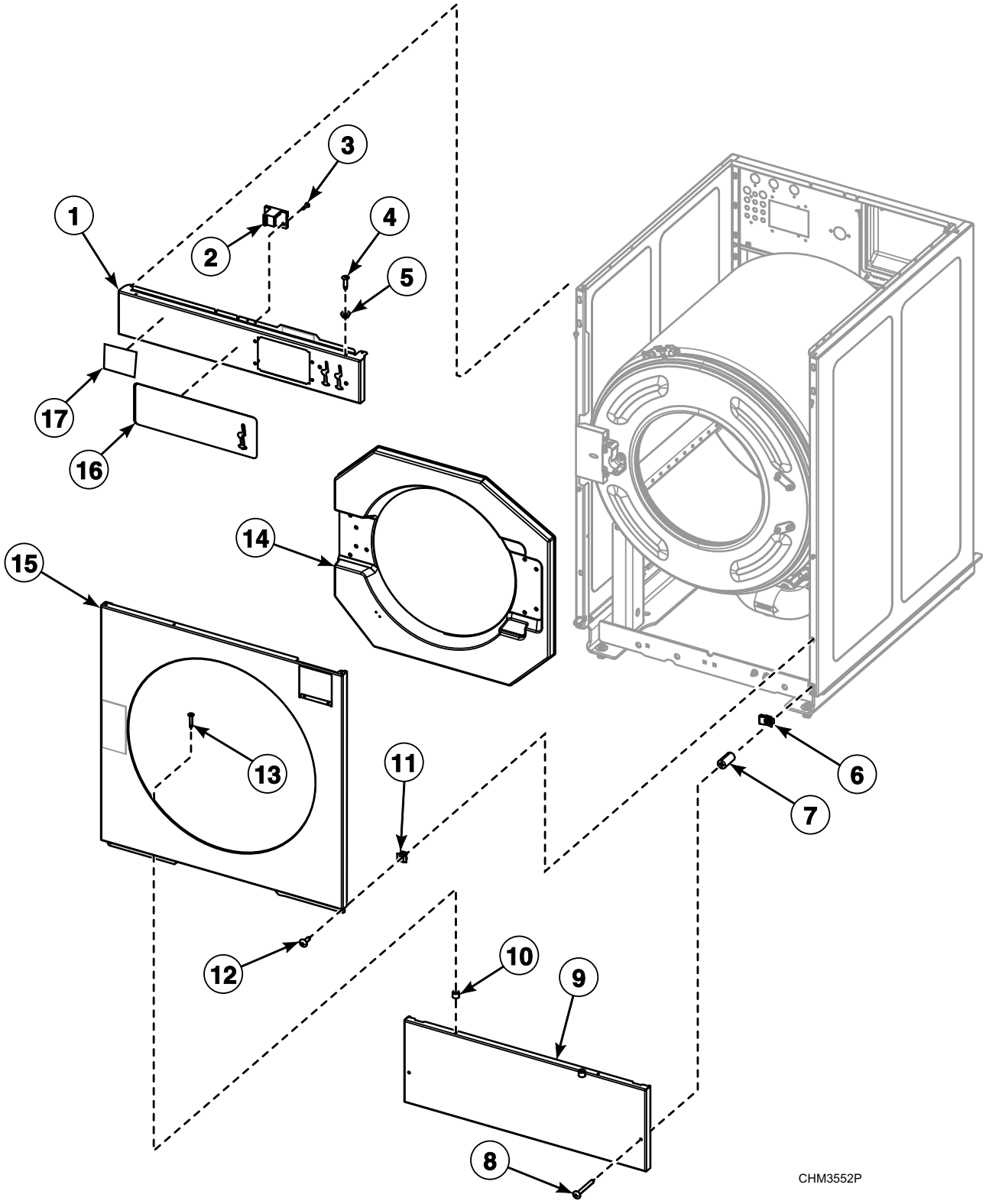

© Copyright, Alliance Laundry Systems LLC – DO NOT COPY or TRANSMIT

Front Panels and Control Panel - Design 7 and 8

REF	PART NO.	DESCRIPTION	COMMENTS
	F8535501	Screw	Attaches front panel to coin box
1	F8697101	Control Panel Assembly	20 pound models
	F8697201	Control Panel Assembly	30 pound models
	F8697301	Control Panel Assembly	40 pound models
	F8697401	Control Panel Assembly	60 pound models
2	F8201001	Top Cover Latch	
3	F431215	Pop Rivet	
4	70412601	Pop Rivet	
5	F8201101	Washer	
6	36020	Nut	
7	F8609701	Access Panel Retaining Spacer	
8	F8589501	Screw	
9	F8524001	Access Panel	20 pound models
	F8524101	Access Panel	30 pound models
	F8524201	Access Panel	40 pound models
	F8553901	Access Panel	60 pound models
10	56079	Panel Locator	
11	70030501	Expansion Clip	
12	F8117601	Screw	
13	M412763	Rivet	
14	F8658701	Door Bezel	20 pound models
	F8658901	Door Bezel	30 pound models
	F8659101	Door Bezel	40 and 60 pound models
15	F8524303	Front Panel	20 pound models
	F8524403	Front Panel	30 pound models
	F8524503	Front Panel	40 pound models
	F8554003	Front Panel	60 pound models
16	F8727501	Overlay	20 pound models; Single coin
	F8727502	Overlay	20 pound models; Dual coin
	F8727505	Overlay	20 pound models; Electronic coin drop
	F8727601	Overlay	30 pound models; Single coin
	F8727602	Overlay	30 pound models; Dual coin
	F8727605	Overlay	30 pound models; Electronic coin drop
	F8727701	Overlay	40 pound models; Single coin
	F8727702	Overlay	40 pound models; Dual coin
	F8727705	Overlay	40 pound models; Electronic coin drop
	F8727801	Overlay	60 pound models; Single coin
	F8727802	Overlay	60 pound models; Dual coin
	F8727805	Overlay	60 pound models; Electronic coin drop
17	F8688801	Nameplate	

© Copyright, Alliance Laundry Systems LLC – DO NOT COPY or TRANSMIT

Rear and Top Panels

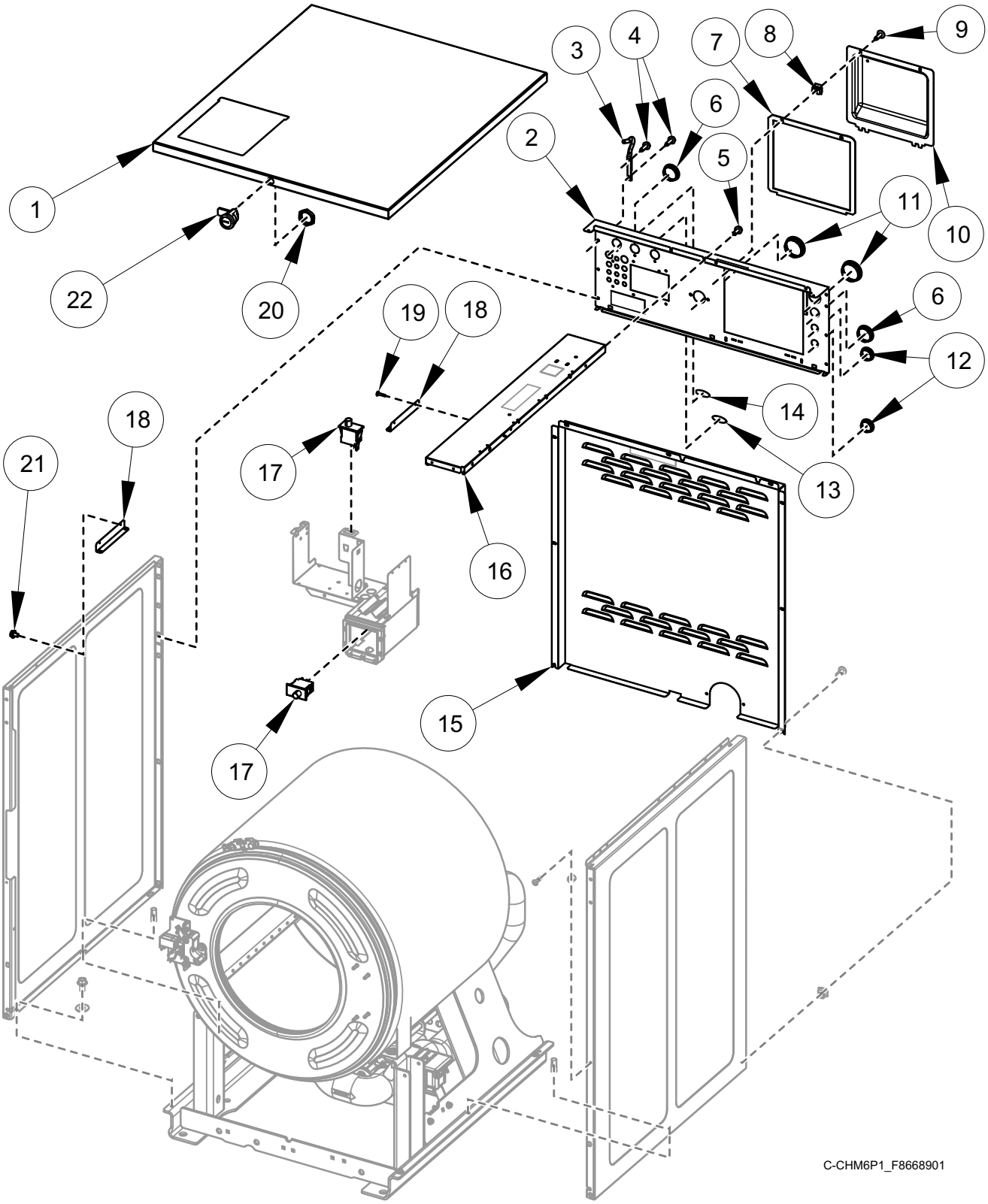

© Copyright, Alliance Laundry Systems LLC – DO NOT COPY or TRANSMIT

Rear and Top Panels

REF	PART NO.	DESCRIPTION	COMMENTS
	2916	Screw	IEC models; Design 8; Used to attach F8772301 Ground Strap to Item 16
	802337	Nut	IEC models; Design 8; Used to attach F8772301 Ground Strap to Item 16
1	F8525401	Top Cover	20 pound models
	F8525501	Top Cover	30 pound models
	F8525601	Top Cover	40 pound models
	F8554301	Top Cover	60 pound models
2	F8513101	Valve Panel	20 pound models
	F8513201	Valve Panel	30 pound models
	F8513301	Valve Panel	40 pound models
	F8554401	Valve Panel	60 pound models
3	F8258601	Top Cover Hinge	
4	F8206901	Screw	
5	33562	Screw	
6	F8223901	Plug	
7	F8542601	Gasket	
8	70030501	Expansion Clip	
9	F8117601	Screw	
10	F8518301	Terminal Tray Cover	
	F8521301	Cable	
11	F8223801	Hole Plug	
12	M400985	Plug	
13	F8611301	Label	Hot water
14	F8611401	Label	Cold water
15	F8527001	Rear Panel	20 pound models
	F8527101	Rear Panel	30 pound models
	F8527201	Rear Panel	40 pound models
	F8554501	Rear Panel	60 pound models
16	F8527301	Cabinet Brace	20 pound models
	F8527401	Cabinet Brace	30 pound models
	F8527501	Cabinet Brace	40 pound models
	F8553201	Cabinet Brace	60 pound models
17	70413301	Pushbutton Switch	
18	F8525701	Dispenser Bracket	
19	F431215	Pop Rivet	
20	44088801	Nut	
21	51780	Screw	
22	44089303P	Panel Lock	
	70155603	Key	

© Copyright, Alliance Laundry Systems LLC – DO NOT COPY or TRANSMIT

Side Panels

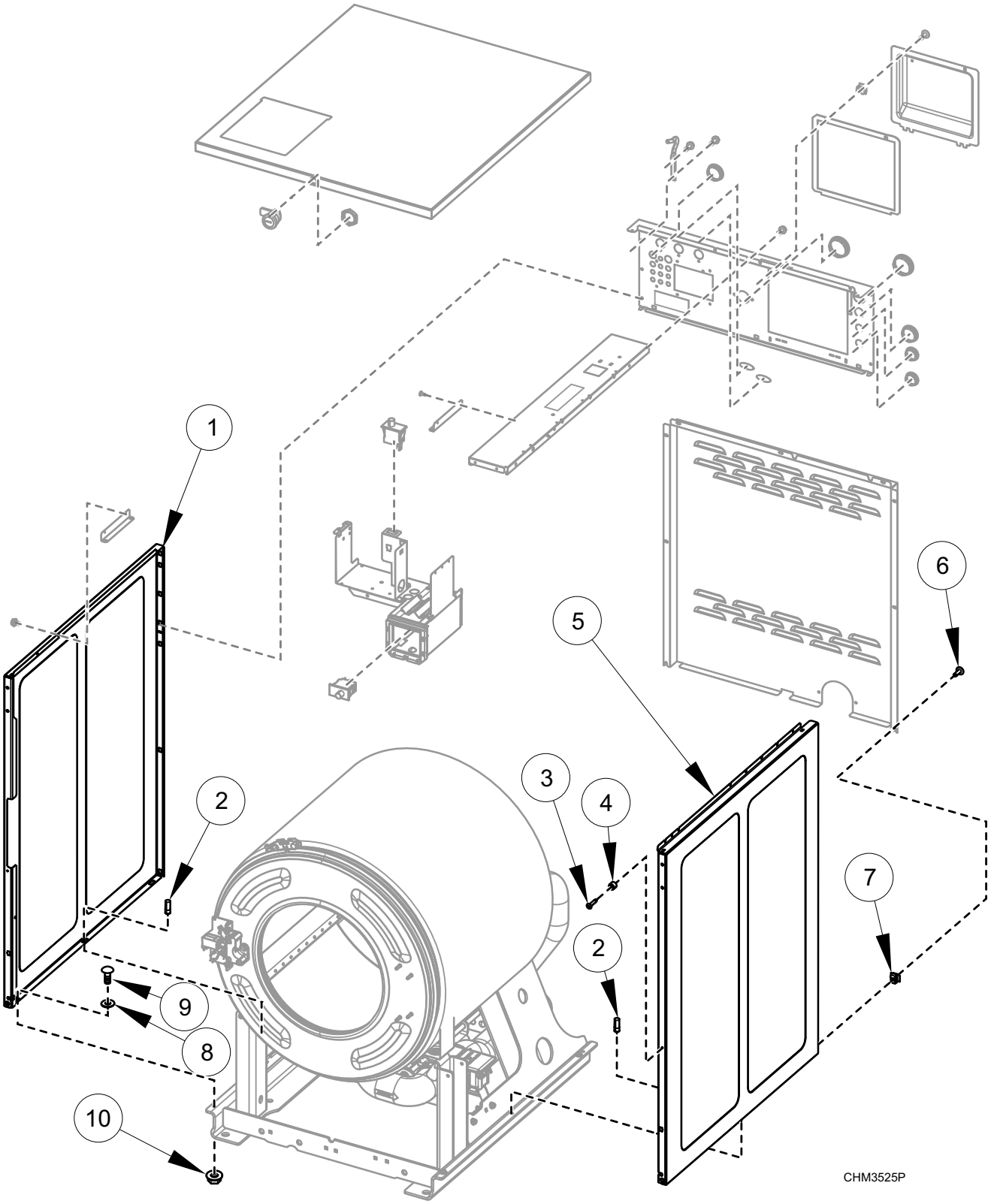

© Copyright, Alliance Laundry Systems LLC – DO NOT COPY or TRANSMIT

Side Panels

REF	PART NO.	DESCRIPTION	COMMENTS
1	F8524602	Side Panel	20 pound models; Left; Vinyl clad
	F8524604	Side Panel	20 pound models; Left; Stainless steel all markets through December 7, 2021; T market models starting December 8, 2021; models with 0 in 5th position of serial number starting December 8, 2021
	F8525606	Side Panel	20 pound models; Left; Painted; All markets except T with 6 in 5th position of serial number starting December 8, 2021
	F8524702	Side Panel	30 pound models; Left; Vinyl clad
	F8524704	Side Panel	30 pound models; Left; Stainless steel all markets through December 7, 2021; T market models starting December 8, 2021; models with 0 in 5th position of serial number starting December 8, 2021
	F8524706	Side Panel	30 pound models; Left; Painted; All markets except T with 6 in 5th position of serial number starting December 8, 2021
	F8524802	Side Panel	40 pound models; Left; Vinyl clad
	F8524804	Side Panel	40 pound models; Left; Stainless steel all markets through December 7, 2021; T market models starting December 8, 2021; models with 0 in 5th position of serial number starting December 8, 2021
	F8524806	Side Panel	40 pound models; Left; Painted; All markets except T with 6 in 5th position of serial number starting December 8, 2021
	F8554204	Side Panel	60 pound models; Left; Vinyl clad
	F8554202	Side Panel	60 pound models; Left; Stainless steel all markets through December 7, 2021; T market models starting December 8, 2021; models with 0 in 5th position of serial number starting December 8, 2021
	F8554206	Side Panel	60 pound models; Left; Painted; All markets except T with 6 in 5th position of serial number starting December 8, 2021
2	F8502101	Pin	
3	M412763	Rivet	
4	56079	Panel Locator	
5	F8524601	Side Panel	20 pound models; Right; Vinyl clad
	F8524603	Side Panel	20 pound models; Right; Stainless steel all markets through December 7, 2021; T market models starting December 8, 2021; models with 0 in 5th position of serial number starting December 8, 2021
	F8525605	Side Panel	20 pound models; Right; Painted; All markets except T with 6 in 5th position of serial number starting December 8, 2021
	F8524701	Side Panel	30 pound models; Right; Vinyl clad
	F8524703	Side Panel	30 pound models; Right; Stainless steel all markets through December 7, 2021; T market models starting December 8, 2021; models with 0 in 5th position of serial number starting December 8, 2021
	F8524705	Side Panel	30 pound models; Right; Painted; All markets except T with 6 in 5th position of serial number starting December 8, 2021
	F8524801	Side Panel	40 pound models; Right; Vinyl clad
	F8524803	Side Panel	40 pound models; Right; Stainless steel all markets through December 7, 2021; T market models starting December 8, 2021; models with 0 in 5th position of serial number starting December 8, 2021
	F8524805	Side Panel	40 pound models; Right; Painted; All markets except T with 6 in 5th position of serial number starting December 8, 2021
	F8554203	Side Panel	60 pound models; Right; Vinyl clad
	F8554201	Side Panel	60 pound models; Right; Stainless steel all markets through December 7, 2021; T market models starting December 8, 2021; models with 0 in 5th position of serial number starting December 8, 2021
	F8554205	Side Panel	60 pound models; Right; Painted; All markets except T with 6 in 5th position of serial number starting December 8, 2021
6	F8117601	Screw	
7	70030501	Expansion Clip	
8	M405535	Washer	
9	F8402801	Bolt	
10	44087201	Nut	

© Copyright, Alliance Laundry Systems LLC – DO NOT COPY or TRANSMIT

Door - 20 Pound Models - Design 4

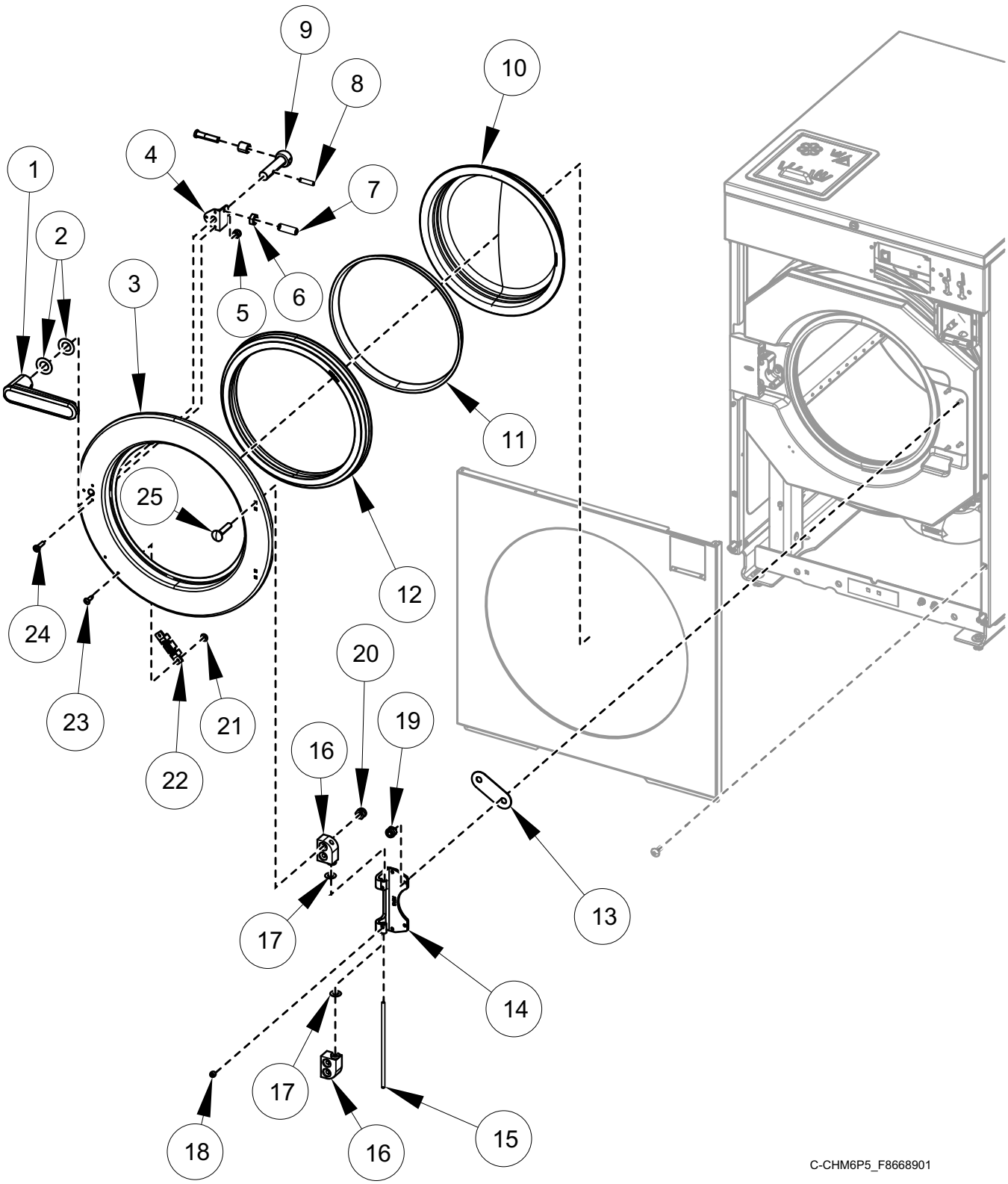

© Copyright, Alliance Laundry Systems LLC – DO NOT COPY or TRANSMIT

Door - 20 Pound Models - Design 4

REF	PART NO.	DESCRIPTION	COMMENTS
	F8617203	Door Assembly	Includes items 1-12, 14-18 and 20-25
	F8617204	Door Assembly	Chrome; Includes items 1-12, 14-18 and 20-25
	F8617206	Door Assembly	Chrome and green; Includes items 1-12, 14-18 and 20-25
	F8617205	Door Assembly	Green; Includes items 1-12, 14-18 and 20-25
1	F8544701	Door Handle	
2	F431916	Washer	
3	F8507502	Door	
	F8752501P	Door	Mirror polished
4	F8567501	Door Handle Spacer Kit	Includes items 6 and 7
5	F430232	Nut	
6	F431041	Nut	
7	F430532	Screw	
8	F8782601	Spring Pin	
9	F8221403	Door Latch Arm Assembly	Includes latch arm shaft, latch arm support and sleeve
10	F8675701P	Door Glass	
11	F8583201	Door Glass Trim	Black
	F8583204	Door Glass Trim	Green
12	F200000202	Door Gasket	
13	F200131000P	Door Hinge Shim Kit	
14	F190216P	Door Hinge	
15	F602813-2	Rod	
16	F150271	Door Mount	
17	F431929	Washer	Non-ferrous
	F431147	Washer	
18	F430536	Screw	
19	C001236	Nut	
20	F430215	Nut	
21	F431133	Washer	
22	F8390801	Magnet	
23	F431223	Pop Rivet	
24	F8535501	Screw	
25	F430974	Bolt	
	F8508101	Bolt	Chrome

© Copyright, Alliance Laundry Systems LLC – DO NOT COPY or TRANSMIT

Door - 20 Pound Models - Design 6, 7 and 8

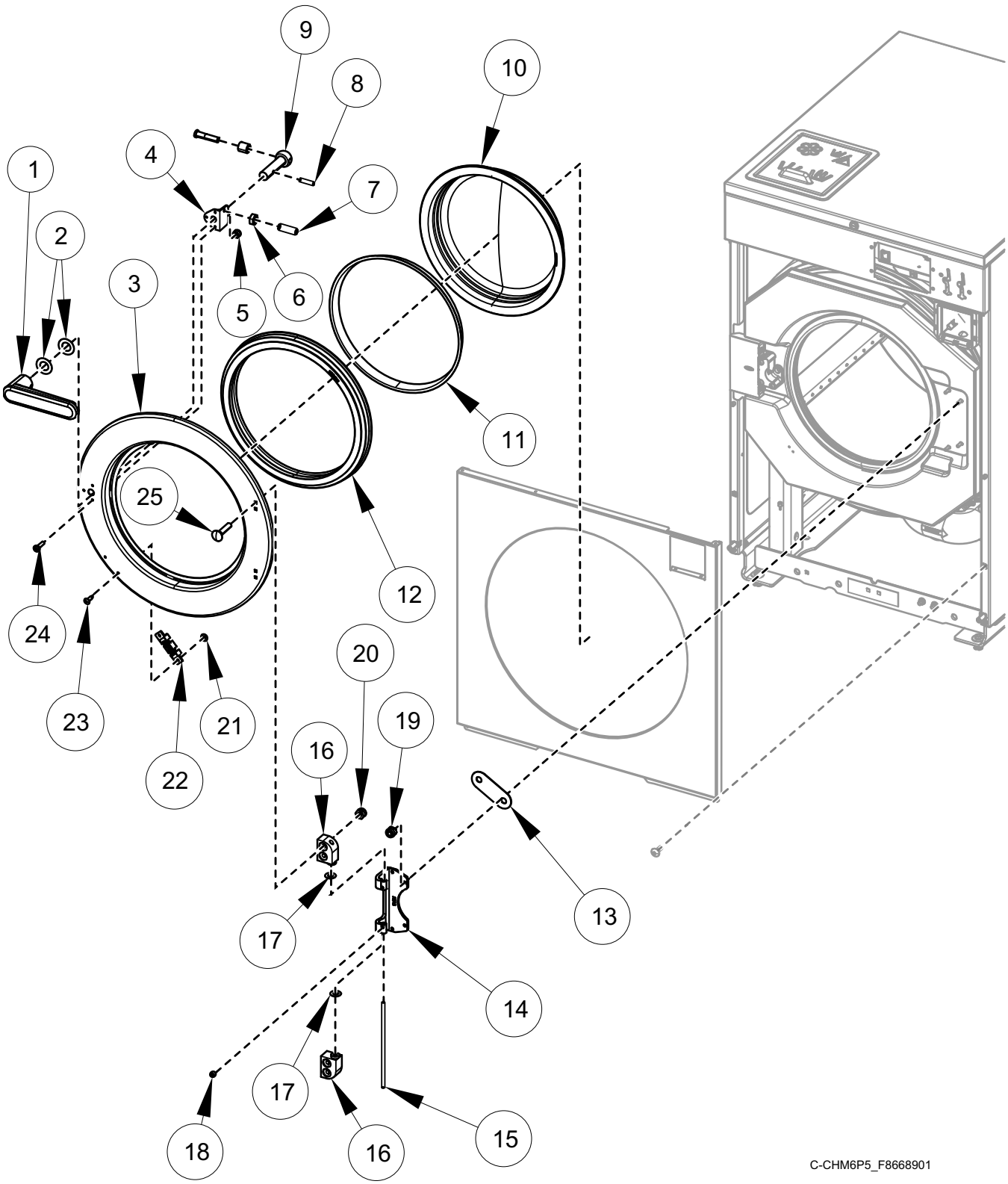

© Copyright, Alliance Laundry Systems LLC – DO NOT COPY or TRANSMIT

Door - 20 Pound Models - Design 6, 7 and 8

REF	PART NO.	DESCRIPTION	COMMENTS
	F8617213	Door Assembly	Includes items 1-12, 14-18 and 20-25
	F8617214	Door Assembly	Chrome; Includes items 1-12, 14-18 and 20-25
	F8617216	Door Assembly	Chrome and green; Includes items 1-12, 14-18 and 20-25
	F8617215	Door Assembly	Green; Includes items 1-12, 14-18 and 20-25
1	F8544701	Door Handle	
2	F431916	Washer	
3	F8507502	Door	
	F8752501P	Door	Mirror polished
4	F8567501	Door Handle Spacer Kit	Includes items 6 and 7
5	F430232	Nut	
6	F431041	Nut	
7	F430532	Screw	
8	F8782601	Spring Pin	
9	F8221403	Door Latch Arm Assembly	Includes latch arm shaft, latch arm support and sleeve
10	F8675701P	Door Glass	
11	F8583201	Door Glass Trim	Black
	F8583204	Door Glass Trim	Green
12	F200000202	Door Gasket	
13	F200131000P	Door Hinge Shim Kit	
14	F190216P	Door Hinge	
15	F602813-2	Rod	
16	F150271	Door Mount	
17	F431929	Washer	Non-ferrous
	F431147	Washer	
18	F430536	Screw	
19	C001236	Nut	
20	F430215	Nut	
21	F431133	Washer	
22	F8390801	Magnet	
23	F431223	Pop Rivet	
24	F8535501	Screw	
25	F430974	Bolt	
	F8508101	Bolt	Chrome

© Copyright, Alliance Laundry Systems LLC – DO NOT COPY or TRANSMIT

Door - 30 Pound Models - Design 4

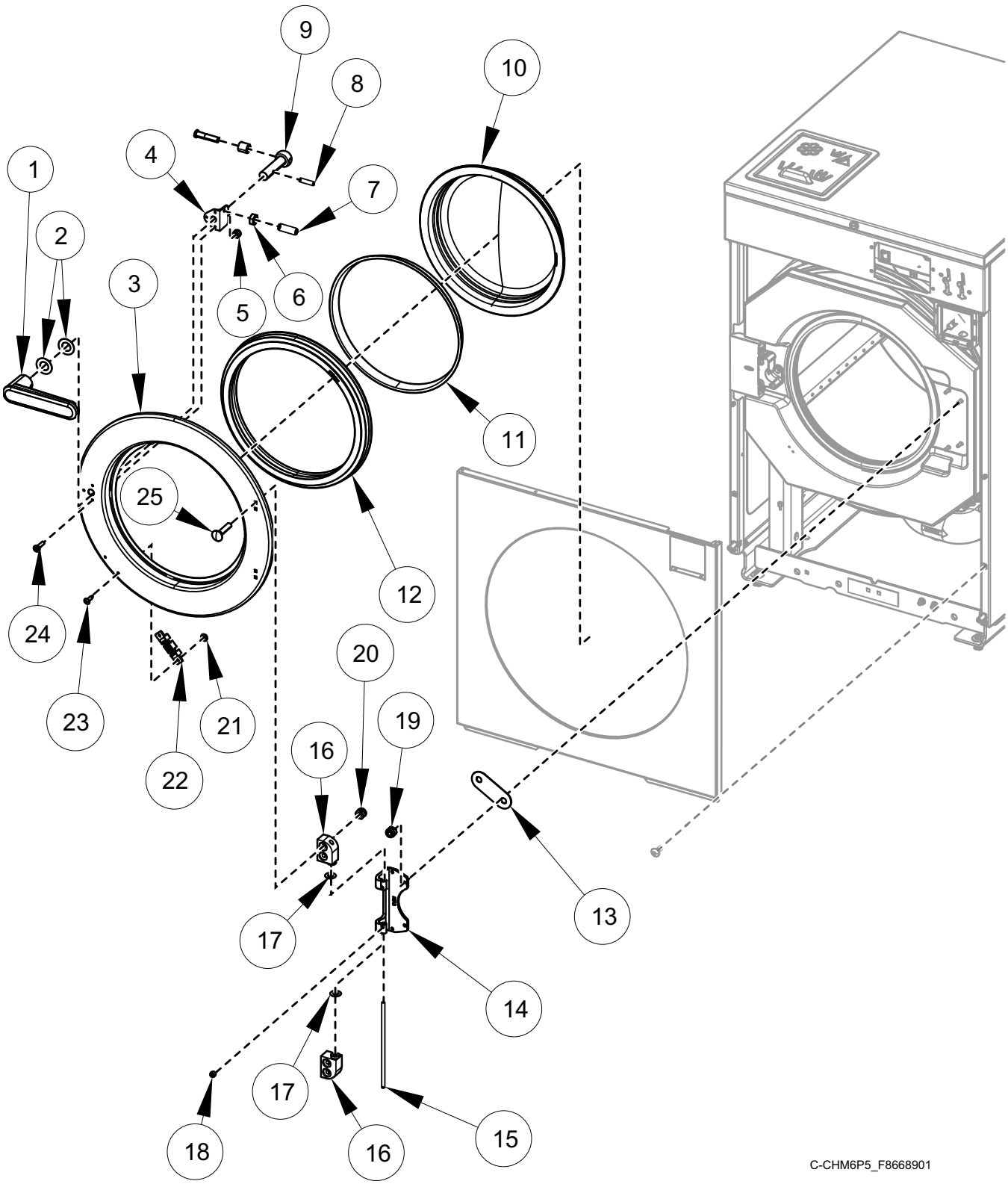

© Copyright, Alliance Laundry Systems LLC – DO NOT COPY or TRANSMIT

Door - 30 Pound Models - Design 4

REF	PART NO.	DESCRIPTION	COMMENTS
	F8617303	Door Assembly	Includes items 1-12, 14-18 and 20-25
	F8617304	Door Assembly	Chrome; Includes items 1-12, 14-18 and 20-25
	F8617306	Door Assembly	Chrome and green; Includes items 1-12, 14-18 and 20-25
	F8617305	Door Assembly	Green; Includes items 1-12, 14-18 and 20-25
1	F8544701	Door Handle	
2	F431916	Washer	
3	F8507602	Door	
	F8752601	Door	Chrome
4	F8567501	Door Handle Spacer Kit	
5	F430232	Nut	
6	F431041	Nut	
7	F430533	Screw	
8	F8782601	Spring Pin	
9	F8221403	Door Latch Arm Assembly	Includes latch arm shaft, latch arm support and sleeve
10	F8485305	Door Glass	
11	F8583202	Door Glass Trim	Black
	F8583205	Door Glass Trim	Green
12	F8111602	Door Gasket	
13	F200131000P	Door Hinge Shim Kit	
14	F190216P	Door Hinge	
15	F602813-2	Rod	
16	F150271	Door Mount	
17	F431929	Washer	Non-ferrous
	F431147	Washer	
18	F430536	Screw	
19	C001236	Nut	
20	F430215	Nut	
21	F431133	Washer	
22	F8390801	Magnet	
23	F431223	Pop Rivet	
24	F8535501	Screw	
25	F430974	Bolt	
	F8508101	Bolt	Chrome

© Copyright, Alliance Laundry Systems LLC – DO NOT COPY or TRANSMIT

Door - 30 Pound Models - Design 6, 7 and 8

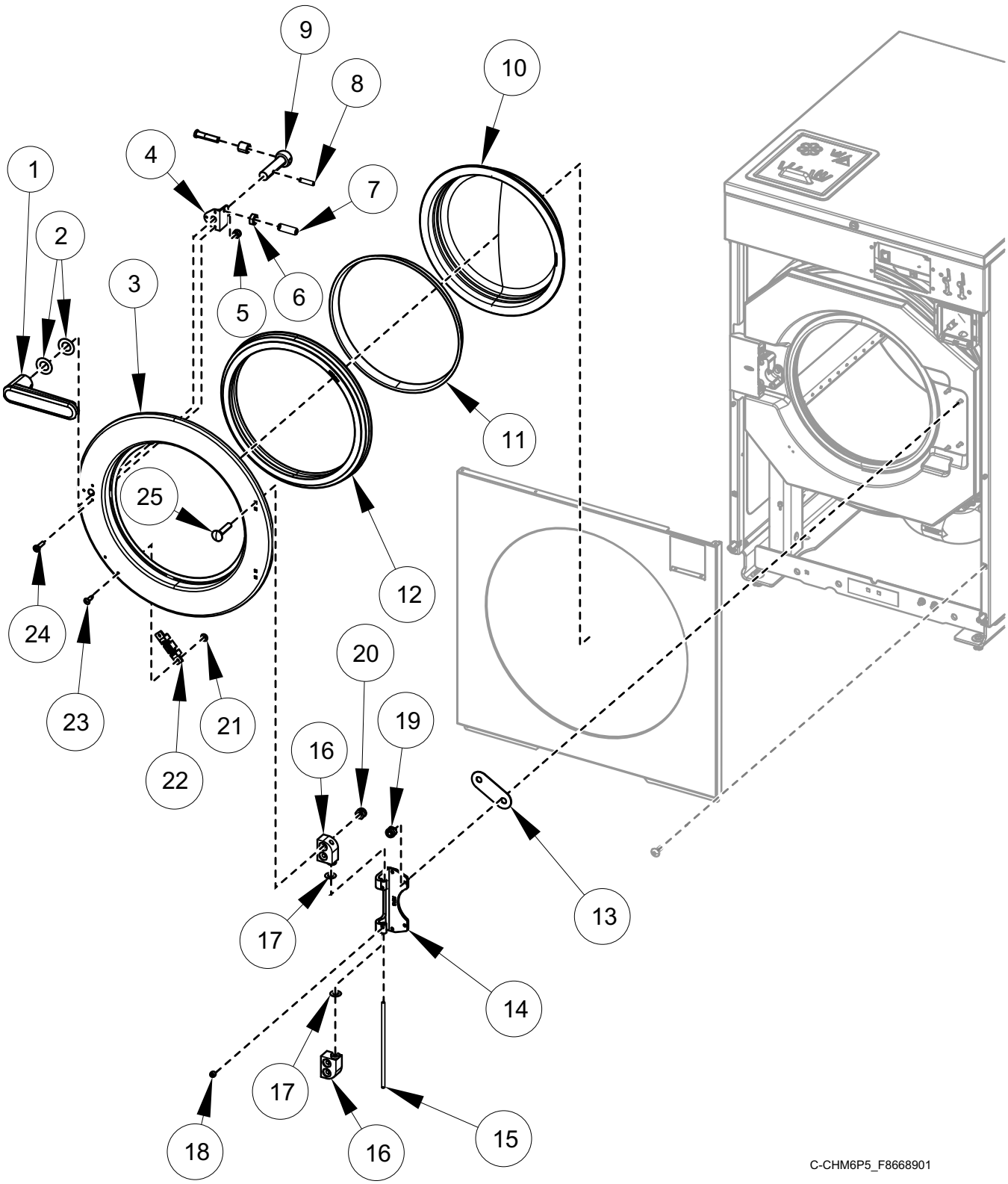

© Copyright, Alliance Laundry Systems LLC – DO NOT COPY or TRANSMIT

Door - 30 Pound Models - Design 6, 7 and 8

REF	PART NO.	DESCRIPTION	COMMENTS
	F8617313	Door Assembly	Includes items 1-12, 14-18 and 20-25
	F8617314	Door Assembly	Chrome; Includes items 1-12, 14-18 and 20-25
	F8617316	Door Assembly	Chrome and green; Includes items 1-12, 14-18 and 20-25
	F8617315	Door Assembly	Green; Includes items 1-12, 14-18 and 20-25
1	F8544701	Door Handle	
2	F431916	Washer	
3	F8507602	Door	
	F8752601	Door	Chrome
4	F8567501	Door Handle Spacer Kit	
5	F430232	Nut	
6	F431041	Nut	
7	F430533	Screw	
8	F8782601	Spring Pin	
9	F8221403	Door Latch Arm Assembly	Includes latch arm shaft, latch arm support and sleeve
10	F8485305	Door Glass	
11	F8583202	Door Glass Trim	Black
	F8583205	Door Glass Trim	Green
12	F8111602	Door Gasket	
13	F200131000P	Door Hinge Shim Kit	
14	F190216P	Door Hinge	
15	F602813-2	Rod	
16	F150271	Door Mount	
17	F431929	Washer	Non-ferrous
	F431147	Washer	
18	F430536	Screw	
19	C001236	Nut	
20	F430215	Nut	
21	F431133	Washer	
22	F8390801	Magnet	
23	F431223	Pop Rivet	
24	F8535501	Screw	
25	F430974	Bolt	
	F8508101	Bolt	Chrome

© Copyright, Alliance Laundry Systems LLC – DO NOT COPY or TRANSMIT

Door - 40 and 60 Pound Models - Design 4

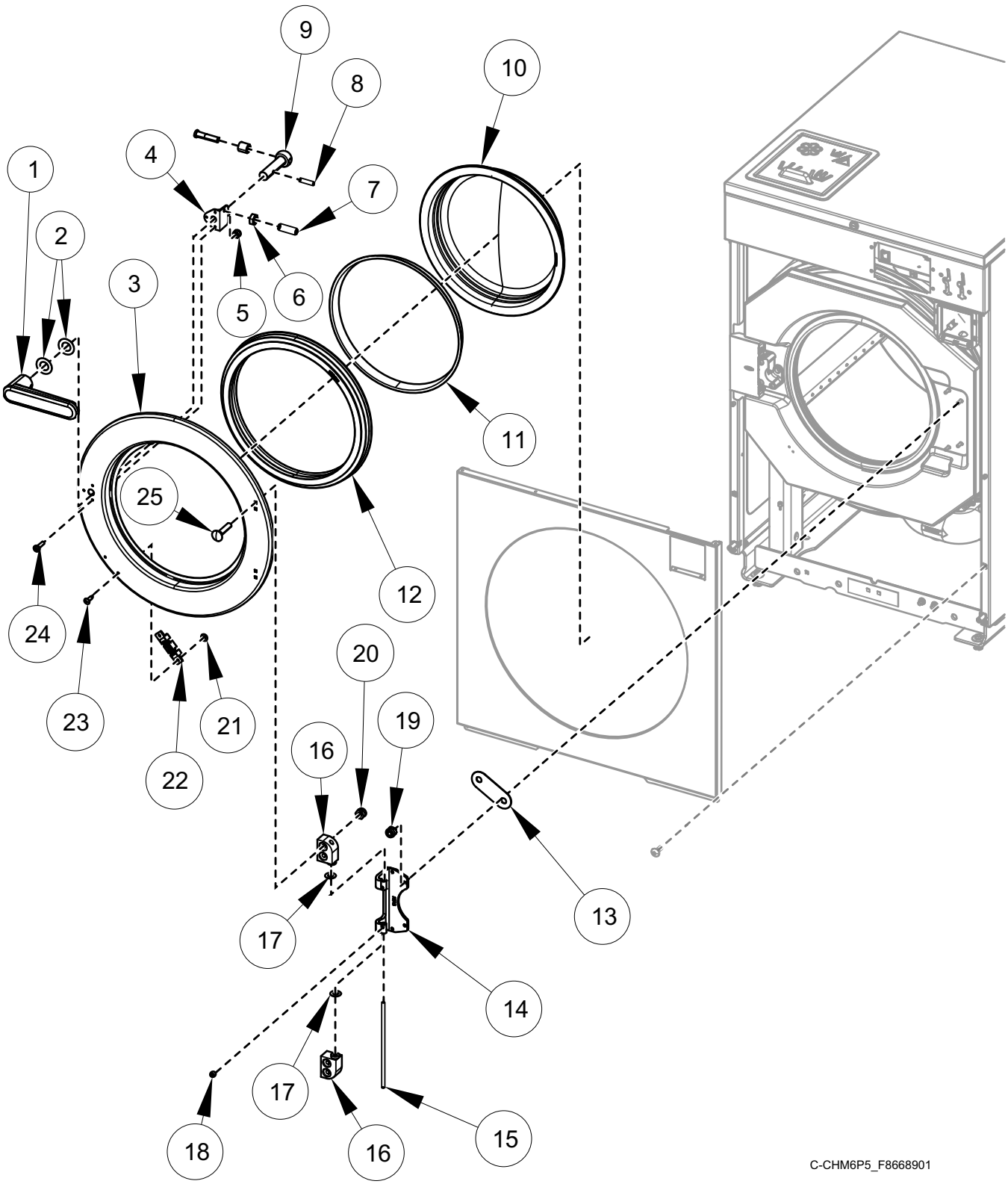

© Copyright, Alliance Laundry Systems LLC – DO NOT COPY or TRANSMIT

Door - 40 and 60 Pound Models - Design 4

REF	PART NO.	DESCRIPTION	COMMENTS
	F8617403	Door Assembly	Includes items 1-12, 14-18 and 20-25
	F8617404	Door Assembly	Chrome; Includes items 1-12, 14-18 and 20-25
	F8617406	Door Assembly	Chrome and green; Includes items 1-12, 14-18 and 20-25
	F8617405	Door Assembly	Green; Includes items 1-12, 14-18 and 20-25
1	F8544701	Door Handle	
2	F431916	Washer	
3	F8507702	Door	
	F8752701	Door	Mirror polished
4	F8567501	Door Handle Spacer Kit	
5	F430232	Nut	
6	F431041	Nut	
7	F430533	Screw	
8	F8782601	Spring Pin	
9	F8221403	Door Latch Arm Assembly	Includes latch arm shaft, latch arm support and sleeve
10	F8485405	Door Glass	
11	F8583203	Door Glass Trim	Black
	F8583206	Door Glass Trim	Green
12	F8111502	Door Gasket	
13	F200131000P	Door Hinge Shim Kit	
14	F190216P	Door Hinge	
15	F602813-3	Rod	
16	F150271	Door Mount	
17	F431929	Washer	Non-ferrous
	F431147	Washer	
18	F430536	Screw	
19	C001236	Nut	
20	F430215	Nut	
21	F431133	Washer	
22	F8390801	Magnet	
23	F431223	Pop Rivet	
24	F8535501	Screw	
25	F430974	Bolt	
	F8508101	Bolt	Chrome

© Copyright, Alliance Laundry Systems LLC – DO NOT COPY or TRANSMIT

Door - 40 and 60 Pound Models - Design 6, 7 and 8

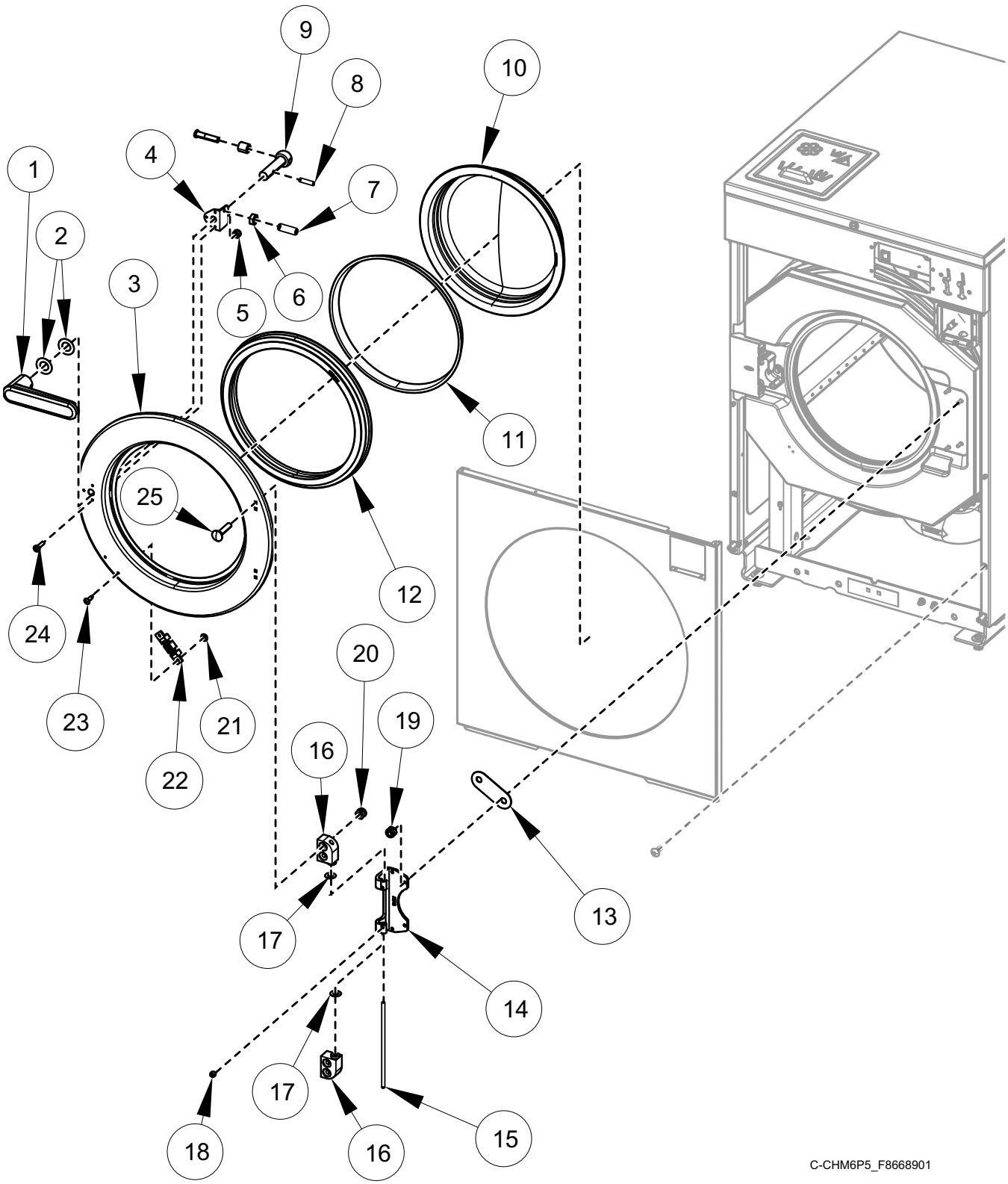

© Copyright, Alliance Laundry Systems LLC – DO NOT COPY or TRANSMIT

Door - 40 and 60 Pound Models - Design 6, 7 and 8

REF	PART NO.	DESCRIPTION	COMMENTS
	F8617413	Door Assembly	Includes items 1-12, 14-18 and 20-25
	F8617414	Door Assembly	Chrome; Includes items 1-12, 14-18 and 20-25
	F8617416	Door Assembly	Chrome and green; Includes items 1-12, 14-18 and 20-25
	F8617415	Door Assembly	Green; Includes items 1-12, 14-18 and 20-25
1	F8544701	Door Handle	
2	F431916	Washer	
3	F8507702	Door	
	F8752701	Door	Polished
4	F8567501	Door Handle Spacer Kit	
5	F430232	Nut	
6	F431041	Nut	
7	F430533	Screw	
8	F8782601	Spring Pin	
9	F8221403	Door Latch Arm Assembly	Includes latch arm shaft, latch arm support and sleeve
10	F8485405	Door Glass	
11	F8583203	Door Glass Trim	Black
	F8583206	Door Glass Trim	Green
12	F8111502	Door Gasket	
13	F200131000P	Door Hinge Shim Kit	
14	F190216P	Door Hinge	
15	F602813-3	Rod	
16	F150271	Door Mount	
17	F431929	Washer	Non-ferrous
	F431147	Washer	
18	F430536	Screw	
19	C001236	Nut	
20	F430215	Nut	
21	F431133	Washer	
22	F8390801	Magnet	
23	F431223	Pop Rivet	
24	F8535501	Screw	
25	F430974	Bolt	
	F8508101	Bolt	Chrome

© Copyright, Alliance Laundry Systems LLC – DO NOT COPY or TRANSMIT

Door Lock

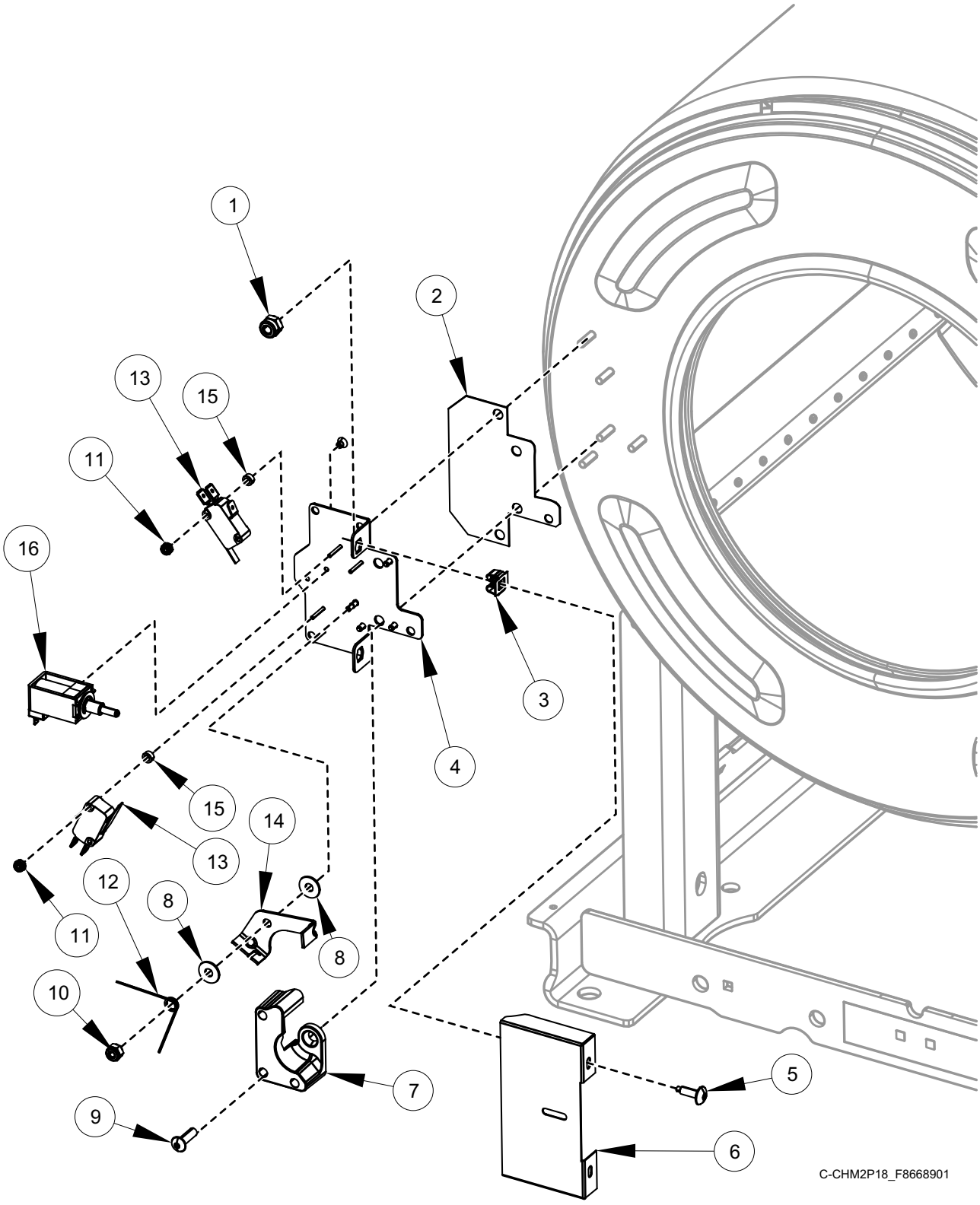

© Copyright, Alliance Laundry Systems LLC – DO NOT COPY or TRANSMIT

Door Lock

REF	PART NO.	DESCRIPTION	COMMENTS
	F8632401	Door Lock Assembly	Includes items 3, 4 and 10-16
	F8520201	Door Lock Harness	20 and 30 pound models
	F8520202	Door Lock Harness	40 and 60 pound models
	F8066804	Reed Switch Assembly	
1	F431024	Nut	
2	F8344401	Door Lock Plate Shim	
3	70030501	Expansion Clip	
4	F8223202	Door Lock Plate Assembly	
5	F8117601	Screw	
6	F8245001	Door Lock Cover	
7	F8344501	Door Lock Catch	
8	F8193101	Washer	
9	F8270701	Bolt	
10	F430232	Nut	
11	F430225	Nut	
12	F8070301	Torsion/Door Lock Spring	
13	F200203200	Door Lock Microswitch	
14	F8223401	Door Lock Switch Lever	
15	F431901	Spacer	
16	F977P3	Door Lock Solenoid Replacement Kit	

© Copyright, Alliance Laundry Systems LLC – DO NOT COPY or TRANSMIT

Shell Front, Basket, Shell and Frame Template - 20 and 30 Pound Models

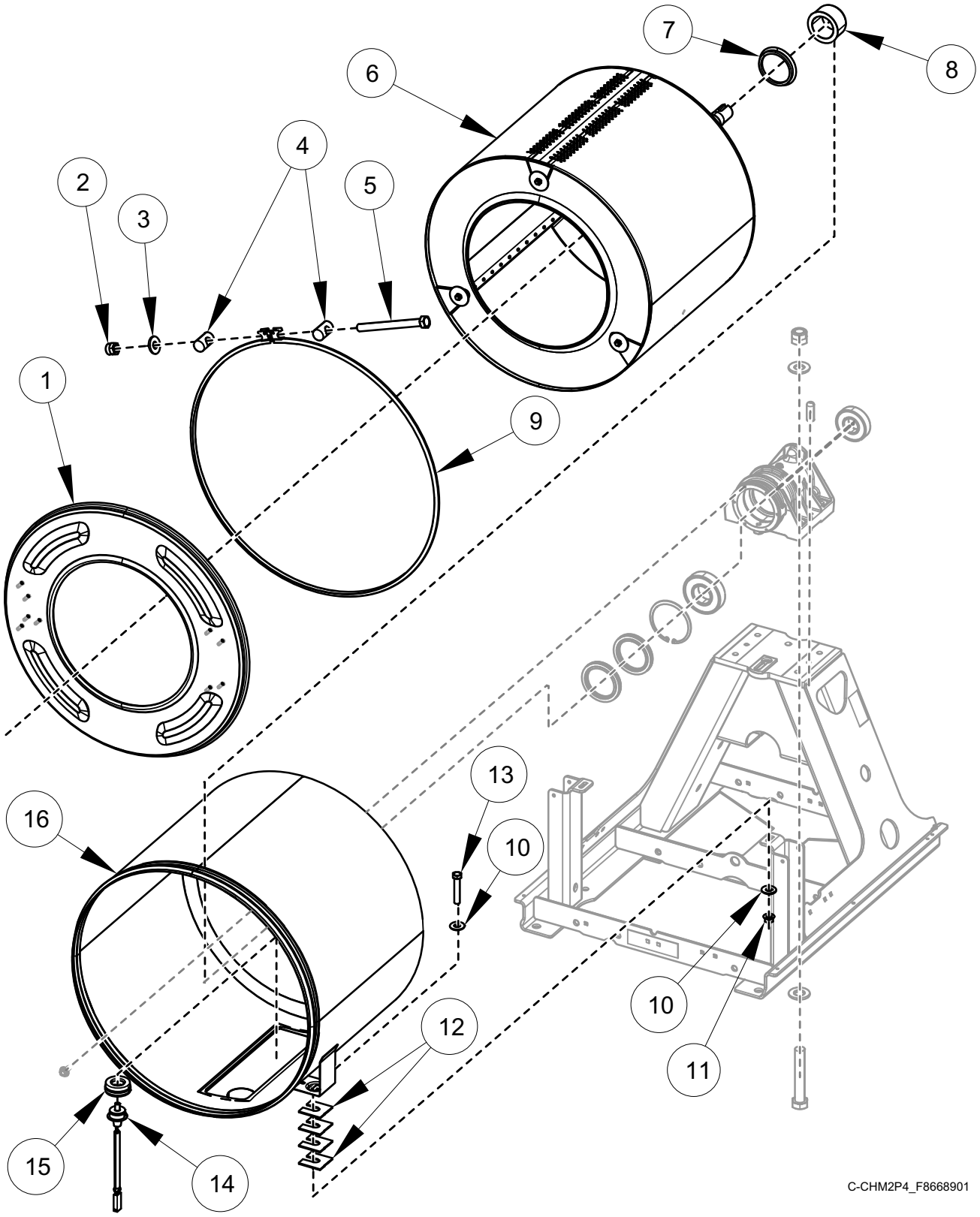

© Copyright, Alliance Laundry Systems LLC – DO NOT COPY or TRANSMIT

Shell Front, Basket, Shell and Frame Template - 20 and 30 Pound Models

REF	PART NO.	DESCRIPTION	COMMENTS
	F8598301	Harness	Thermistor
	F8772301	Ground Strap	IEC models; Design 8
	802337	Nut	IEC models; Design 8; Used to attach F8772301 Ground Strap to item 16
1	F8222301	Shell Front	20 pound models
	F8222401	Shell Front	30 pound models
2	F430218	Nut	
3	M400080	Washer	
4	F8302701	Pin	
5	F8673701	Screw	
6	F8391304	Basket	20 pound models; Viton
	F8391302	Basket Assembly	20 pound models; Rain
	F8391504	Basket	30 pound models; Viton
	F8391502	Basket Assembly	30 pound models; Rain
7	F8337002	Excluder Seal	
8	F8343906P	Shaft Seal Sleeve Kit	
9	F8537801	Shell Band Kit	20 pound models; Includes items 2-5
	F8537802	Shell Band Kit	30 pound models; Includes items 2-5
10	M400081	Washer	
11	44087301	Nut	
12	F8402701	Washer	
13	F8621601	Screw	
14	F8538801	Thermistor	
15	2251000400	Temperature Probe Grommet	
16	F8512102	Shell	20 pound models; Design 4, 6 and 7; Electric and dual heat
	F8514002	Shell	30 pound models; Design 4, 6 and 7; Electric and dual heat
	F8512101	Shell	20 pound models; Design 4, 6 and 7; Standard
	F8514001	Shell	30 pound models; Design 4, 6 and 7; Standard
	F8781102	Shell	20 pound models; Design 8; Electric and dual heat
	F8781202	Shell	30 pound models; Design 8; Electric and dual heat
	F8781101	Shell	20 pound models; Design 8; Standard
	F8781201	Shell	30 pound models; Design 8; Standard

© Copyright, Alliance Laundry Systems LLC – DO NOT COPY or TRANSMIT

Shell Front, Basket, Shell and Frame Template - 40 and 60 Pound Models

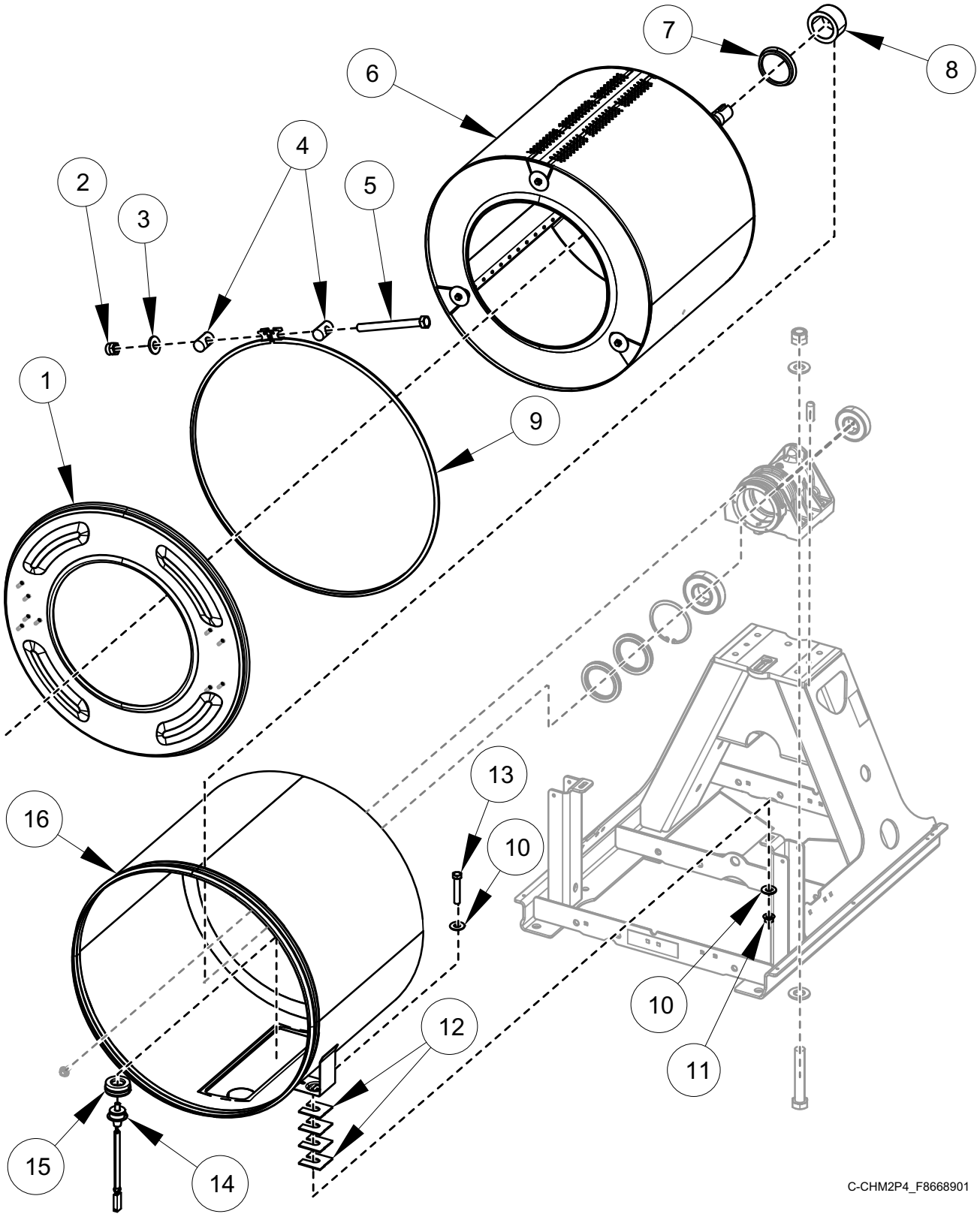

© Copyright, Alliance Laundry Systems LLC – DO NOT COPY or TRANSMIT

Shell Front, Basket, Shell and Frame Template - 40 and 60 Pound Models

REF	PART NO.	DESCRIPTION	COMMENTS
	F8598302	Harness	Thermistor
	F8772301	Ground Strap	IEC models; Design 8
	802337	Nut	IEC models; Design 8; Used to attach F8772301 Ground Strap to item 16
1	F8222501	Shell Front	40 pound models
	F8222601	Shell Front	60 pound models
2	F430218	Nut	
3	M400080	Washer	
4	F8302701	Pin	
5	F8673701	Screw	
6	F8391704	Basket	40 pound models; Viton
	F8391702	Basket Assembly	40 pound models; Rain
	F8502805	Basket	60 pound models; Viton
	F8502802	Basket Assembly	60 pound models; Rain
7	F8337002	Excluder Seal	
8	F8343906P	Shaft Seal Sleeve Kit	
9	F8537803	Shell Band Kit	40 pound models; Includes items 2-5
	F8537804	Shell Band Kit	60 pound models; Includes items 2-5
10	M400081	Washer	
11	44087301	Nut	
12	F8402701	Washer	
13	F8621601	Screw	
14	F8538801	Thermistor	
15	2251000400	Temperature Probe Grommet	
16	F8512202	Shell	40 pound models; Design 4, 6 and 7; Electric and dual heat
	F8543702	Shell	60 pound models; Design 4, 6 and 7; Electric and dual heat
	F8512202	Shell	40 pound models; Design 4, 6 and 7; Steam Heat
	F8543702	Shell	60 pound models; Design 4, 6 and 7; Steam Heat
	F8512201	Shell	40 pound models; Design 4, 6 and 7; Standard
	F8543701	Shell	60 pound models; Design 4, 6 and 7; Standard
	F8781302	Shell	40 pound models; Design 8; Electric and dual heat
	F8781402	Shell	60 pound models; Design 8; Electric and dual heat
	F8781302	Shell	40 pound models; Design 8; Steam Heat
	F8781402	Shell	60 pound models; Design 8; Steam Heat
	F8781301	Shell	40 pound models; Design 8; Standard
	F8781401	Shell	60 pound models; Design 8; Standard

© Copyright, Alliance Laundry Systems LLC – DO NOT COPY or TRANSMIT

Bearing Housing

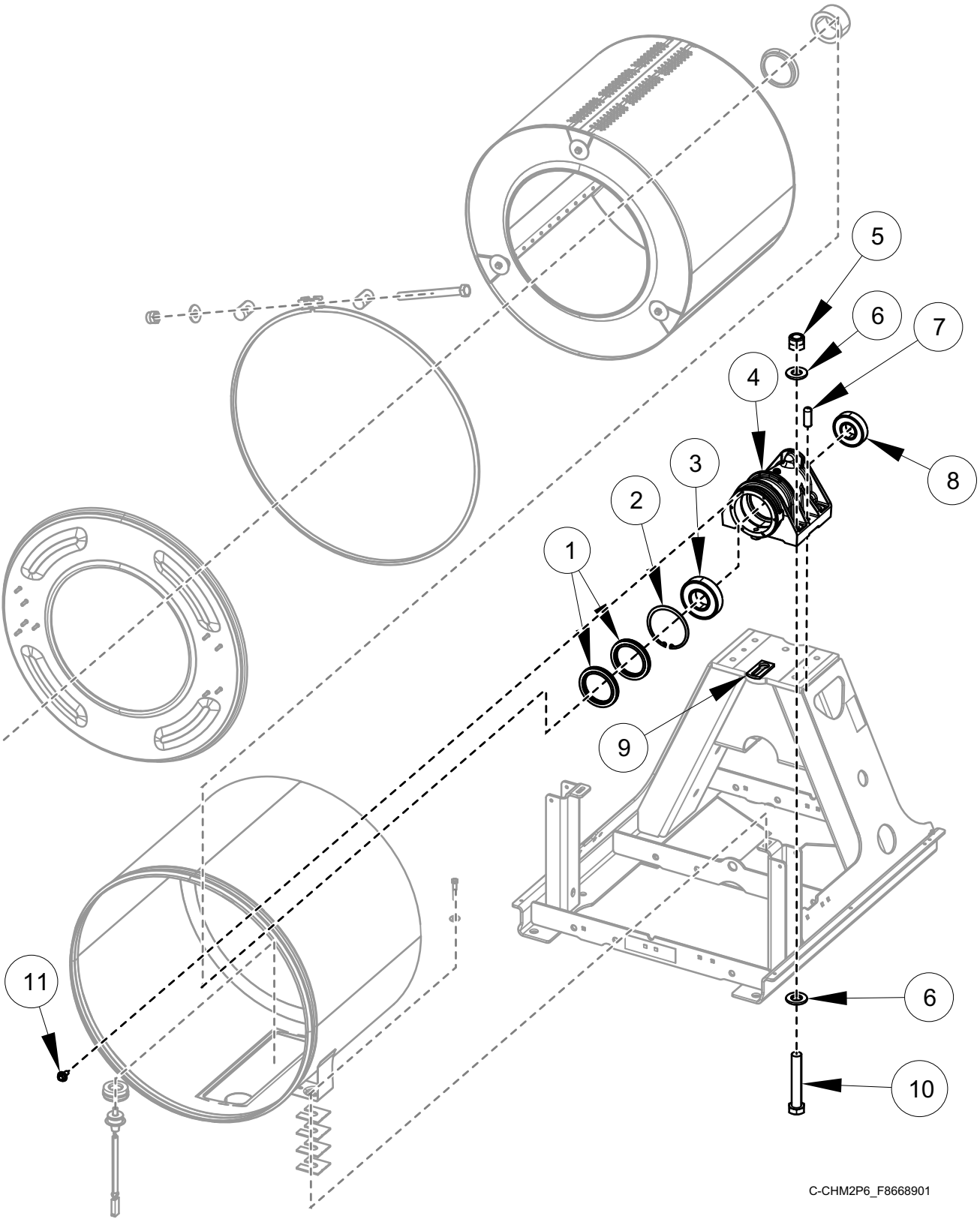

© Copyright, Alliance Laundry Systems LLC – DO NOT COPY or TRANSMIT

Bearing Housing

REF	PART NO.	DESCRIPTION	COMMENTS
	F8271601P	Bearing Housing Assembly	20 pound models; Includes items 1-4 and 8; Standard
	F8271602	Bearing Housing Assembly	20 pound models; Includes items 1-4 and 8; Viton
	F8271701P	Bearing Housing Assembly	30 pound models; Includes items 1-4 and 8; Standard
	F8271702	Bearing Housing Assembly	30 pound models; Includes items 1-4 and 8; Viton
	F8271801P	Bearing Housing Assembly	40 pound models; Includes items 1-4 and 8; Standard
	F8271802	Bearing Housing Assembly	40 pound models; Includes items 1-4 and 8; Viton
	F8271901P	Bearing Housing Assembly	60 pound models; Includes items 1-4 and 8; Standard
	F8271902	Bearing Housing Assembly	60 pound models; Includes items 1-4 and 8; Viton
1	F8203801	Triple Lip Seal	20 pound models; Standard
	F8203813	Triple Lip Seal	20 pound models; Viton
	F8203802	Triple Lip Seal	30 pound models; Standard
	F8203814	Triple Lip Seal	30 pound models; Viton
	F8203803	Triple Lip Seal	40 pound models; Standard
	F8203815	Triple Lip Seal	40 pound models; Viton
	F8203806	Triple Lip Seal	60 pound models; Standard
	F8203816	Radial Lip Seal	60 pound models; Viton
2	F8344901	Retaining Ring	20 pound models
	F8345001	Retaining Ring	30 pound models
	F8337801	Retaining Ring	40 pound models
	F8337901	Retaining Ring	60 pound models
3	F100137P	Bearing	20 and 40 pound models
	F100123P	Bearing	30 pound models
	F100135	Bearing	60 pound models
4	F8744401R	Bearing Housing	20 pound models
	F8246802	Bearing Housing	30 pound models
	F8744601R	Bearing Housing	40 pound models
	F8744701R	Bearing Housing	60 pound models
5	F8387701	Nut	
6	F430339	Washer	
7	F8388201	Dowel Pin	
8	F100136P	Bearing	20 pound models
	F100108	Bearing	30 pound models
	F100134	Bearing	40 and 60 pound models
9	F8350302	Seal Scupper Pad	
10	F8368801	Screw	
11	F8442702	Screw	

© Copyright, Alliance Laundry Systems LLC – DO NOT COPY or TRANSMIT

Drain Plumbing

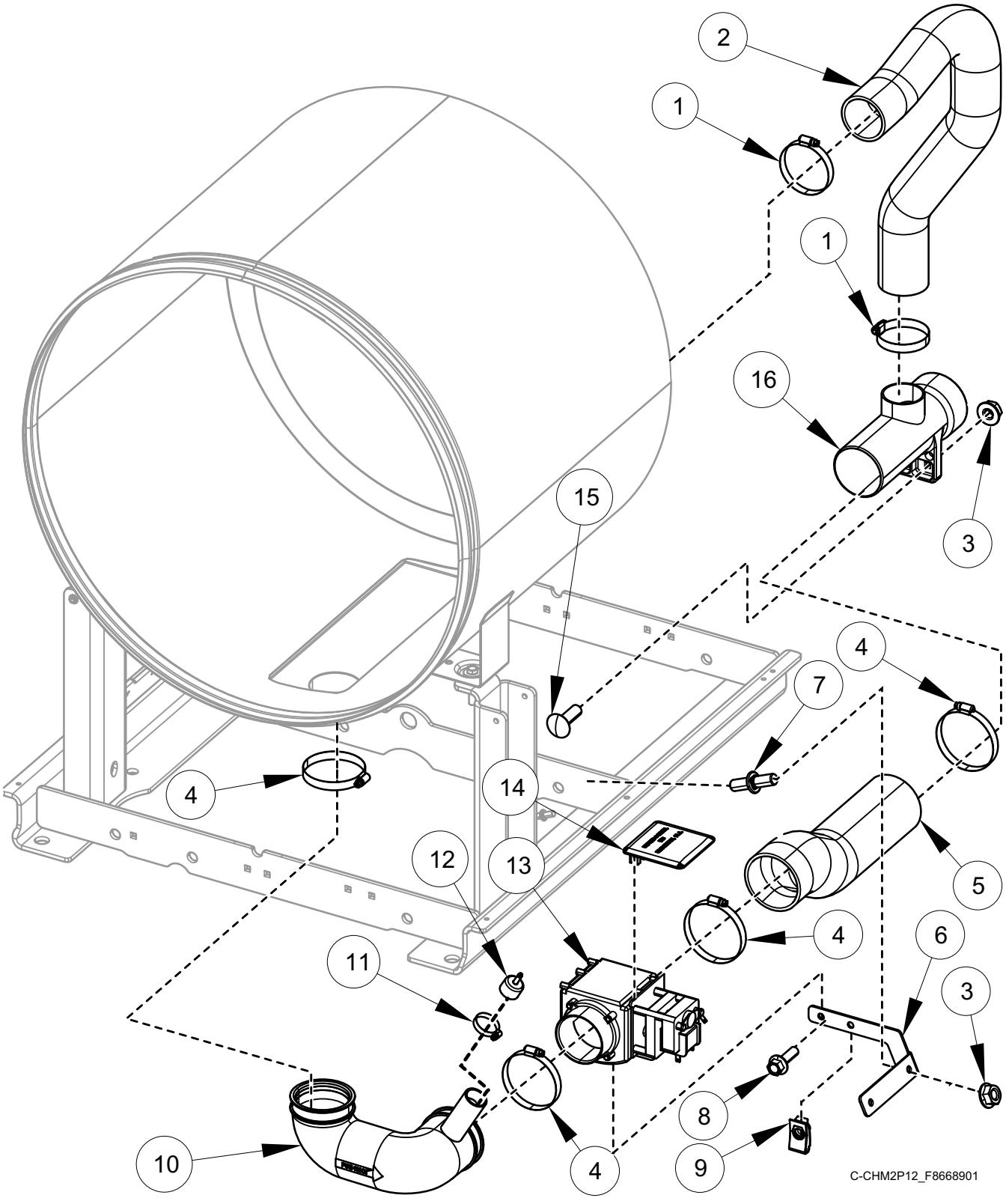

© Copyright, Alliance Laundry Systems LLC – DO NOT COPY or TRANSMIT

Drain Plumbing

REF	PART NO.	DESCRIPTION	COMMENTS
	F200165100	Drain Hose	
	F8520001	Drain Valve Harness	20 and 30 pound models
	F8520002	Drain Valve Harness	40 and 60 pound models
1	F200213	Hose Clamp	
2	F8522401	Overflow Hose	20 pound models
	F8521201	Overflow Hose	30 pound models
	F8522501	Overflow Hose	40 and 60 pound models
3	44087201	Nut	
4	F200201	Hose Clamp	
5	F8587301	Rear Drain Hose	20 pound models
	F8543001	Rear Drain Hose	30 pound models
	F8543201	Rear Drain Hose	40 pound models
	F8543501	Rear Drain Hose	60 pound models
6	F8587701	Drain Valve Bracket	20 pound models
	F8543101	Drain Valve Bracket	30 pound models
	F8543301	Drain Valve Bracket	40 pound models
	F8543401	Drain Valve Bracket	60 pound models
7	70334702	Stud	
8	202175	Screw	
9	70030401	Nut	
10	F8542002	Drain Hose	20 pound models
	F8541901	Drain Hose	30, 40 and 60 pound models
	F8542001	Drain Hose	40 and 60 pound models; Steam and electric heat
11	36802	Hose Clamp	
12	F8579301	Pressure Cap	
	F8405301	Hose	PVC 72.00
13	F8406302	Drain Valve	3 inch; 120 Volt; Left; NO
	F8406308	Drain Valve	3 inch; 120 Volt; Right; NO
	F8602601P	Drain Valve	3 inch; 230 Volt; Left; NO
	F8602602P	Drain Valve	3 inch; 230 Volt; Right; NO
14	F200133600	Drain Valve Cover	Models with 0 in position 5 of serial number
	F8768801	Drain Valve Cover	Models with 6 in position 5 of serial number
15	F8402801	Bolt	
16	F8752101	Drain Tee	

© Copyright, Alliance Laundry Systems LLC – DO NOT COPY or TRANSMIT

Pump Drain Plumbing - 20, 30 and 40 Pound Models

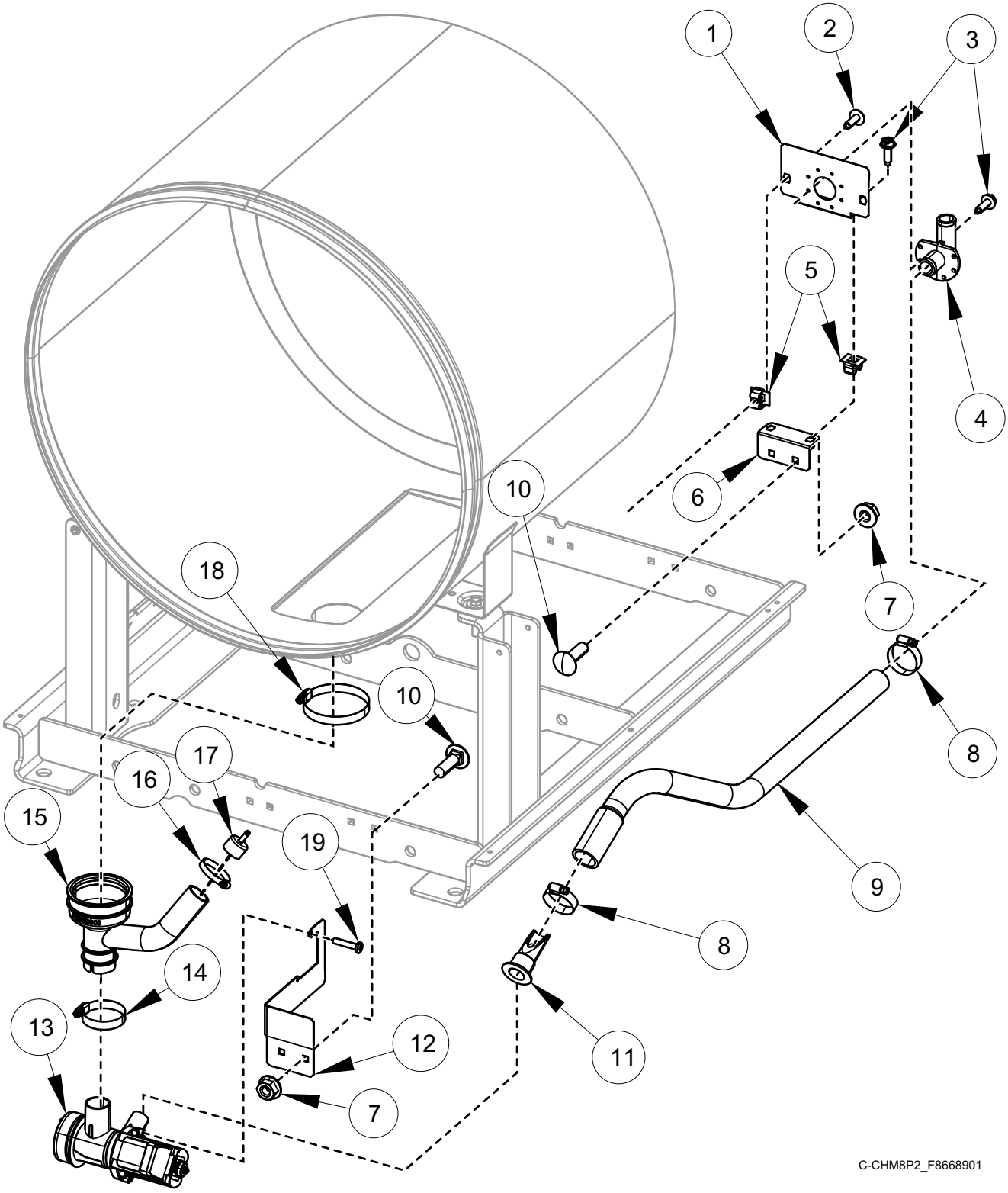

© Copyright, Alliance Laundry Systems LLC – DO NOT COPY or TRANSMIT

Pump Drain Plumbing - 20, 30 and 40 Pound Models

REF	PART NO.	DESCRIPTION	COMMENTS
	27154	Drain Hose	Hose to standpipe
	F150352	Overflow Plug	20 pound models
	F8520001	Drain Valve Harness	20 and 30 pound models
	F8520002	Drain Valve Harness	40 pound models
1	F8571301	Bracket	Upper; Elbow mount
2	F8117601	Screw	
3	F8206901	Screw	
4	35766	Drain Hose Elbow	
5	70030501	Expansion Clip	
6	F8571401	Bracket	Lower; Elbow mount
7	44087201	Nut	
8	F200204	Hose Clamp	
9	F8537001	Pump Drain Rear Hose	20 pound models
	F8557001	Pump Drain Rear Hose	30 pound models
	F8557201	Pump Drain Rear Hose	40 pound models
10	F8402801	Bolt	
11	800310	Backflow Preventer	
12	F8536901	Pump Drain Bracket	20 pound models
	F8557101	Pump Drain Bracket	30 pound models
	F8557301	Pump Drain Bracket	40 pound models
13	805723	Pump Drain and Bracket Assembly	120 Volt/60 Hertz; Green
	805613	Pump Drain and Bracket Assembly	208-240 Volt/60 Hertz; Red
	804038	Pump Drain and Bracket Assembly	220-240 Volt/50 Hertz; Blue
14	F200215	Hose Clamp	
15	F8556601	Pump Drain Hose	
16	36802	Hose Clamp	
17	F8579301	Pressure Cap	
	F8405301	Hose	PVC 72.00
18	F200219	Hose Clamp	
19	F8658501	Screw	

© Copyright, Alliance Laundry Systems LLC – DO NOT COPY or TRANSMIT

Fill Plumbing - 20 Pound Models

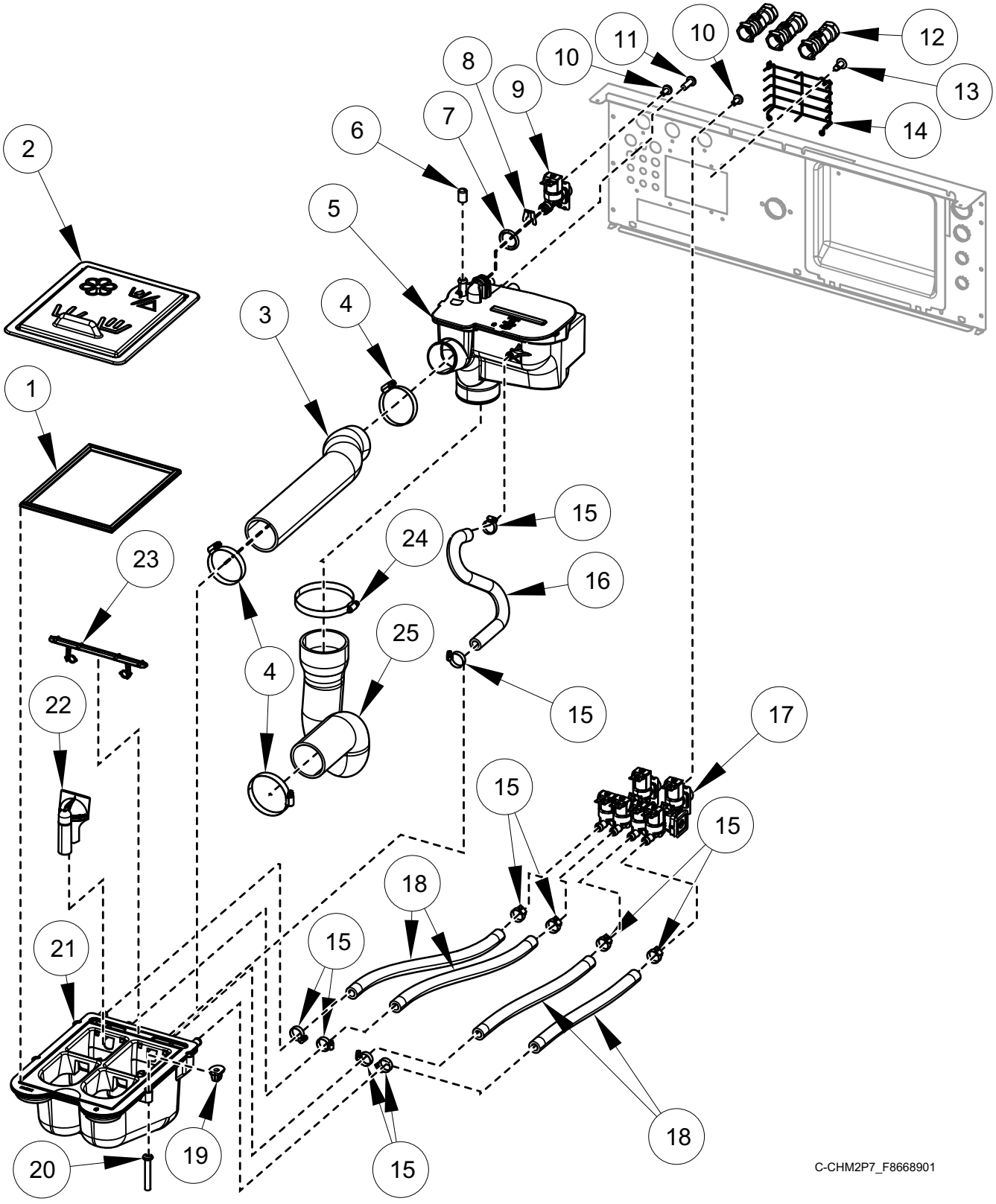

© Copyright, Alliance Laundry Systems LLC – DO NOT COPY or TRANSMIT

Fill Plumbing - 20 Pound Models

REF	PART NO.	DESCRIPTION	COMMENTS
	F8047403	Dispenser	Includes Items 21-23
	F8520101	Fill Valve Harness	
	F8665601	Water Hose Kit	Standard thread; Red (hot); Includes 20290 Washer and 803615 Washer Filter
	F8665603	Water Hose Kit	Standard thread; Blue (cold); Includes 20290 Washer and 803615 Washer Filter
	F8665602	Water Hose Kit	Metric thread; Red (hot); Includes 20290 Washer and 803615 Washer Filter
	F8665604	Water Hose Kit	Metric thread; Blue (cold); Includes 20290 Washer and 803615 Washer Filter
	F8671201	Fill Hose Kit	WRAS; Includes item 12 and F8665602 Water Hose Kit
	F8671202	Fill Hose Kit	WRAS; Includes item 12 and F8665604 Water Hose Kit
	F8671101	Fill Hose Kit	Australian watermark; Includes F8665602 Water Hose Kit and B12543901 Check Valve
	F8671102	Fill Hose Kit	Australian watermark; Includes F8665604 Water Hose Kit and B12543901 Check Valve
	F8739001	Diaphragm	Elbi; Blue Tip
	G582P3	Diaphragm and Guide Kit	Elbi; Standard
	F8739101	Diaphragm Kit	Elbi; Blue Tip
1	B12568601	Dispenser Gasket	
2	F8563204	Dispenser Cover	Black; Icons and text
	F8563203	Dispenser Cover	Gray; Icons and text
	F8563202	Dispenser Cover	Black; Icons
	F8563201	Dispenser Cover	Gray; Icons
3	F8529401	Supply Vacuum Hose	
4	F200213	Hose Clamp	
5	F8517501	Vacuum Breaker Assembly	With fill
	F8517504	Vacuum Breaker Assembly	WRAS; E market models
6	F8197701	Cap	WRAS
7	F8569101	O-Ring	
8	F8566801	Clip	
9	F8565201	Valve	Standard
	F8565202	Valve	Metric
10	F8230301	Screw	
11	800548	Screw	
12	F8301201	Double Check Valve	WRAS
13	70058501	Pop Rivet	
14	F8589601	Vacuum Breaker Guard	
15	36801	Hose Clamp	
16	F8616401	Rear Vent Hose	
17	F8529703P	Manifold Valve	Standard
	F8529704P	Manifold Valve	Metric
18	F8232007	Hose	
19	F0431807-00	Nut	
20	F8535601	Screw	
21	F8437902	Dispenser Weldment	
22	F8047901	Siphon Cover	
23	F8047801	Access Cover	
24	F200201	Hose Clamp	
25	F8529601	P-Trap Hose	

© Copyright, Alliance Laundry Systems LLC – DO NOT COPY or TRANSMIT

Fill Plumbing - 30 Pound Models

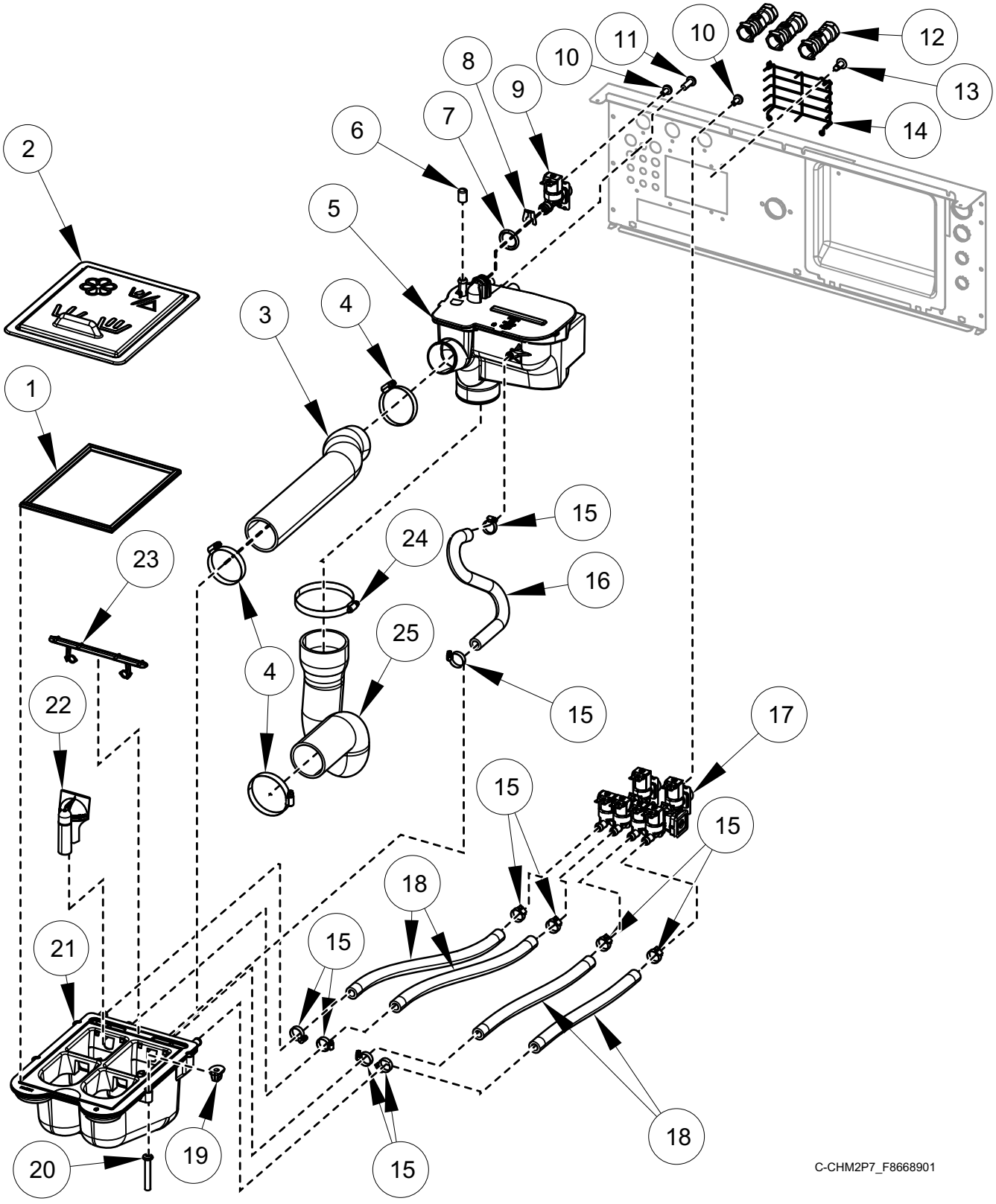

© Copyright, Alliance Laundry Systems LLC – DO NOT COPY or TRANSMIT

Fill Plumbing - 30 Pound Models

REF	PART NO.	DESCRIPTION	COMMENTS
	F8047403	Dispenser	Includes Items 21-23
	F8520101	Fill Valve Harness	
	F8665601	Water Hose Kit	Standard thread; Red (hot); Includes 20290 Washer and 803615 Washer Filter
	F8665603	Water Hose Kit	Standard thread; Blue (cold); Includes 20290 Washer and 803615 Washer Filter
	F8665602	Water Hose Kit	Metric thread; Red (hot); Includes 20290 Washer and 803615 Washer Filter
	F8665604	Water Hose Kit	Metric thread; Blue (cold); Includes 20290 Washer and 803615 Washer Filter
	F8671201	Fill Hose Kit	WRAS; Includes item 12 and F8665602 Water Hose Kit
	F8671202	Fill Hose Kit	WRAS; Includes item 12 and F8665604 Water Hose Kit
	F8671101	Fill Hose Kit	Australian watermark; Includes F8665602 Water Hose Kit and B12543901 Check Valve
	F8671102	Fill Hose Kit	Australian watermark; Includes F8665604 Water Hose Kit and B12543901 Check Valve
	F8739001	Diaphragm	Elbi; Blue Tip
	G582P3	Diaphragm and Guide Kit	Elbi; Standard
	F8739101	Diaphragm Kit	Elbi; Blue Tip
1	B12568601	Dispenser Gasket	
2	F8563204	Dispenser Cover	Black; Icons and text
	F8563203	Dispenser Cover	Gray; Icons and text
	F8563202	Dispenser Cover	Black; Icons
	F8563201	Dispenser Cover	Gray; Icons
3	F8529402	Supply Vacuum Hose	
4	F200213	Hose Clamp	
5	F8517501	Vacuum Breaker Assembly	With fill
	F8517504	Vacuum Breaker Assembly	WRAS; E market models
6	F8197701	Cap	WRAS
7	F8569101	O-Ring	
8	F8566801	Clip	
9	F8565201	Valve	Standard
	F8565202	Valve	Metric
10	F8230301	Screw	
11	800548	Screw	
12	F8301201	Double Check Valve	WRAS
13	70058501	Pop Rivet	
14	F8589601	Vacuum Breaker Guard	
15	36801	Hose Clamp	
16	F8616402	Rear Vent Hose	
17	F8529703P	Manifold Valve	Standard
	F8529704P	Manifold Valve	Metric
18	F8232011	Hose	
19	F0431807-00	Nut	
20	F8535601	Screw	
21	F8437902	Dispenser Weldment	
22	F8047901	Siphon Cover	
23	F8047801	Access Cover	
24	F200201	Hose Clamp	
25	F8529602	P-Trap Hose	

© Copyright, Alliance Laundry Systems LLC – DO NOT COPY or TRANSMIT

Fill Plumbing - 40 Pound Models

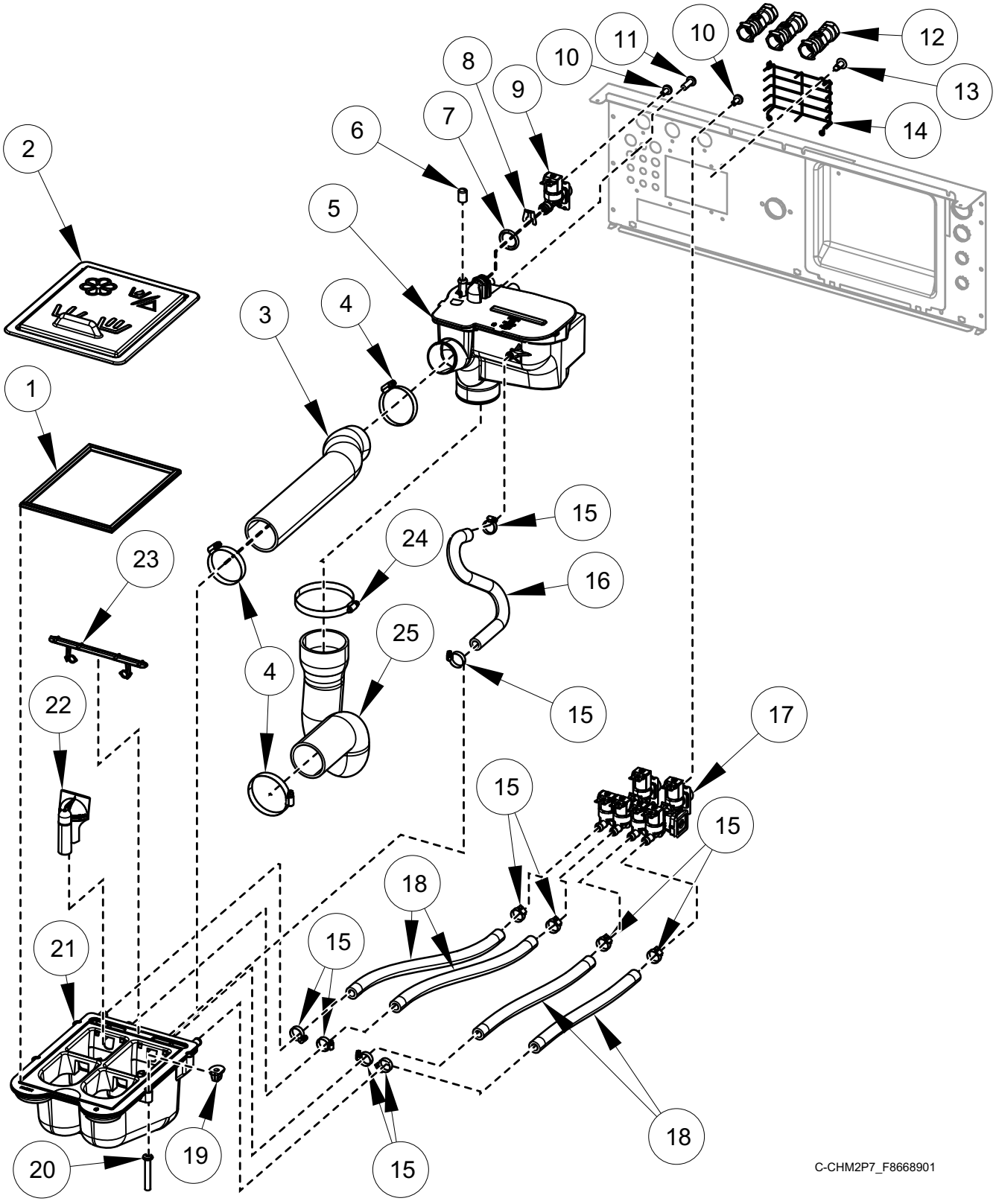

© Copyright, Alliance Laundry Systems LLC – DO NOT COPY or TRANSMIT

Fill Plumbing - 40 Pound Models

REF	PART NO.	DESCRIPTION	COMMENTS
	F8047403	Dispenser	Includes Items 21-23
	F8520101	Fill Valve Harness	
	F8665601	Water Hose Kit	Standard thread; Red (hot); Includes 20290 Washer and 803615 Washer Filter
	F8665603	Water Hose Kit	Standard thread; Blue (cold); Includes 20290 Washer and 803615 Washer Filter
	F8665602	Water Hose Kit	Metric thread; Red (hot); Includes 20290 Washer and 803615 Washer Filter
	F8665604	Water Hose Kit	Metric thread; Blue (cold); Includes 20290 Washer and 803615 Washer Filter
	F8671201	Fill Hose Kit	WRAS; Includes item 12 and F8665602 Water Hose Kit
	F8671202	Fill Hose Kit	WRAS; Includes item 12 and F8665604 Water Hose Kit
	F8671101	Fill Hose Kit	Australian watermark; Includes F8665602 Water Hose Kit and B12543901 Check Valve
	F8671102	Fill Hose Kit	Australian watermark; Includes F8665604 Water Hose Kit and B12543901 Check Valve
	F8739001	Diaphragm	Elbi; Blue Tip
	G582P3	Diaphragm and Guide Kit	Elbi; Standard
	F8739101	Diaphragm Kit	Elbi; Blue Tip
1	B12568601	Dispenser Gasket	
2	F8563204	Dispenser Cover	Black; Icons and text
	F8563203	Dispenser Cover	Gray; Icons and text
	F8563202	Dispenser Cover	Black; Icons
	F8563201	Dispenser Cover	Gray; Icons
3	F8529403	Supply Vacuum Hose	
4	F200213	Hose Clamp	
5	F8517501	Vacuum Breaker Assembly	With fill
	F8517504	Vacuum Breaker Assembly	WRAS; E market models
6	F8197701	Cap	WRAS
7	F8569101	O-Ring	
8	F8566801	Clip	
9	F8565201	Valve	Standard
	F8565202	Valve	Metric
10	F8230301	Screw	
11	800548	Screw	
12	F8301201	Double Check Valve	WRAS
13	70058501	Pop Rivet	
14	F8589601	Vacuum Breaker Guard	
15	36801	Hose Clamp	
16	F8616402	Rear Vent Hose	
17	F8529703P	Manifold Valve	Standard
	F8529704P	Manifold Valve	Metric
18	F8232010	Hose	
19	F0431807-00	Nut	
20	F8535601	Screw	
21	F8437902	Dispenser Weldment	
22	F8047901	Siphon Cover	
23	F8047801	Access Cover	
24	F200201	Hose Clamp	
25	F8529603	P-Trap Hose	

© Copyright, Alliance Laundry Systems LLC – DO NOT COPY or TRANSMIT

Fill Plumbing - 60 Pound Models

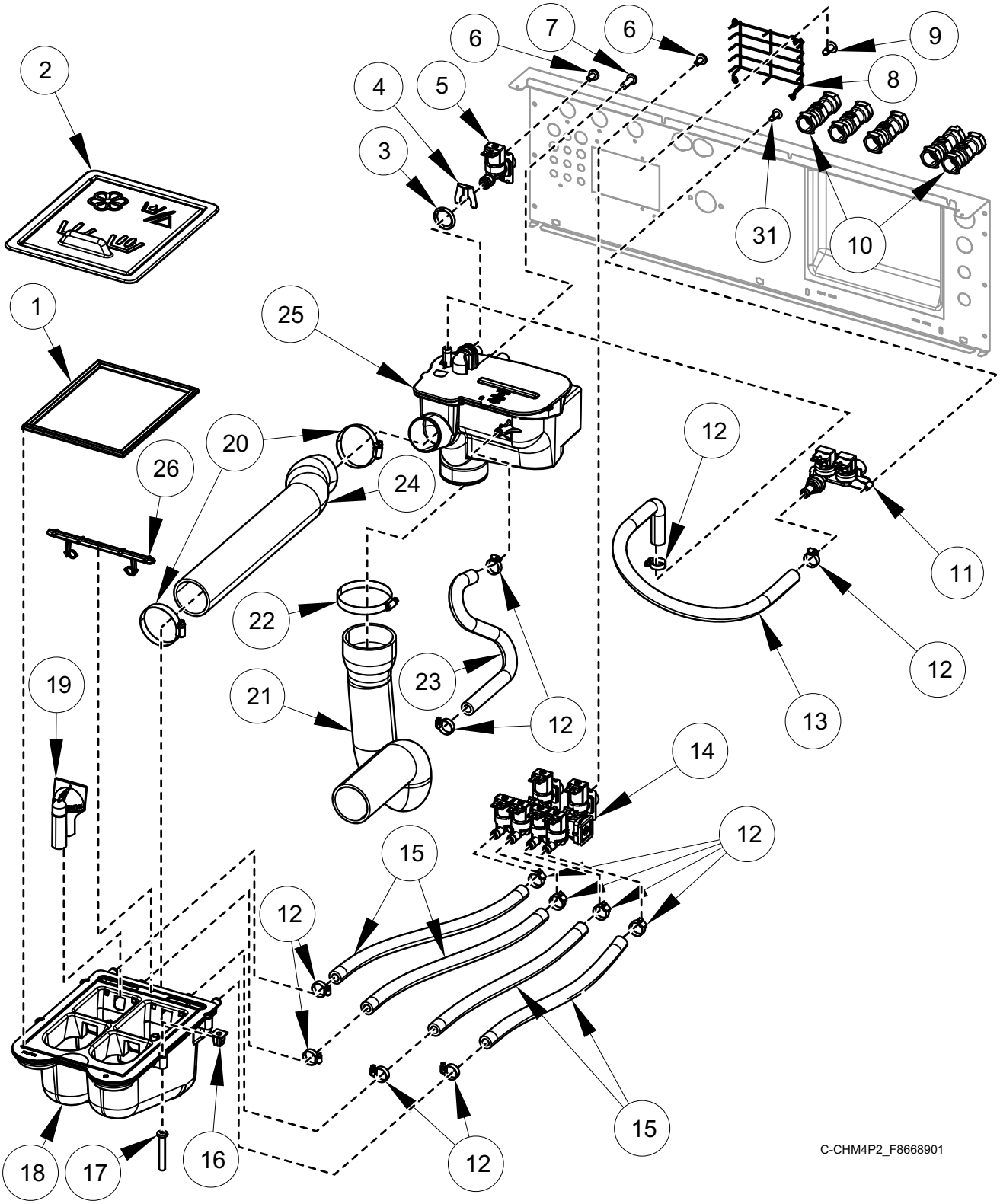

© Copyright, Alliance Laundry Systems LLC – DO NOT COPY or TRANSMIT

Fill Plumbing - 60 Pound Models

REF	PART NO.	DESCRIPTION	COMMENTS
	F8047403	Dispenser	Includes Items 18, 19 and 26
	F8520102	Fill Valve Harness	
	223/00243/00	Y-Connector	
	F8665601	Water Hose Kit	Standard thread; Red (hot); Includes 20290 Washer and 803615 Washer Filter
	F8665603	Water Hose Kit	Standard thread; Blue (cold); Includes 20290 Washer and 803615 Washer Filter
	F8665602	Water Hose Kit	Metric thread; Red (hot); Includes 20290 Washer and 803615 Washer Filter
	F8665604	Water Hose Kit	Metric thread; Blue (cold); Includes 20290 Washer and 803615 Washer Filter
	F8671201	Fill Hose Kit	WRAS; Includes item 11 and F8665602 Water Hose Kit
	F8671202	Fill Hose Kit	WRAS; Includes item 11 and F8665604 Water Hose Kit
	F8671101	Fill Hose Kit	Australian watermark; Includes F8665602 Water Hose Kit and B12543901 Check Valve
	F8671102	Fill Hose Kit	Australian watermark; Includes F8665604 Water Hose Kit and B12543901 Check Valve
	24122	Mixing Valve Screen	Steel mesh; Robertshaw
	F8161201	Mixing Valve Screen	Plastic; Elbi
	F8739001	Diaphragm	Elbi; Blue Tip
	G582P3	Diaphragm and Guide Kit	Elbi; Standard
	F8739101	Diaphragm Kit	Elbi; Blue Tip
1	B12568601	Dispenser Gasket	
2	F8563204	Dispenser Cover	Black; Icons and text
	F8563203	Dispenser Cover	Gray; Icons and text
	F8563202	Dispenser Cover	Black; Icons
	F8563201	Dispenser Cover	Gray; Icons
3	F8569101	O-Ring	
4	F8566801	Clip	
5	F8565201	Valve	3/4 inch; Standard
	F8565202	Valve	3/4 inch; Metric
6	F8230301	Screw	
7	800548	Screw	
8	F8589601	Vacuum Breaker Guard	
9	70058501	Pop Rivet	
10	F8301201	Double Check Valve	WRAS
11	F8434003	Mixing Valve	Standard
	F8434004	Mixing Valve	Metric
12	36801	Hose Clamp	
13	F8598501	Auxiliary Fill Hose	
14	F8529703P	Manifold Valve	Standard
	F8529704P	Manifold Valve	Metric
15	F8232012	Hose	
16	F0431807-00	Nut	
17	F8535601	Screw	
18	F8437902	Dispenser Weldment	
19	F8047901	Siphon Cover	
20	F200213	Hose Clamp	
21	F8529604	P-Trap Hose	
22	F200201	Hose Clamp	
23	F8616404	Rear Vent Hose	
24	F8529404	Supply Vacuum Hose	
25	F8517501	Vacuum Breaker Assembly	With fill; WRAS
	F8517504	Vacuum Breaker Assembly	WRAS; E market models
26	F8047801	Access Cover	

© Copyright, Alliance Laundry Systems LLC – DO NOT COPY or TRANSMIT

Motor, Pulley and Belt - 20 and 30 Pound Models

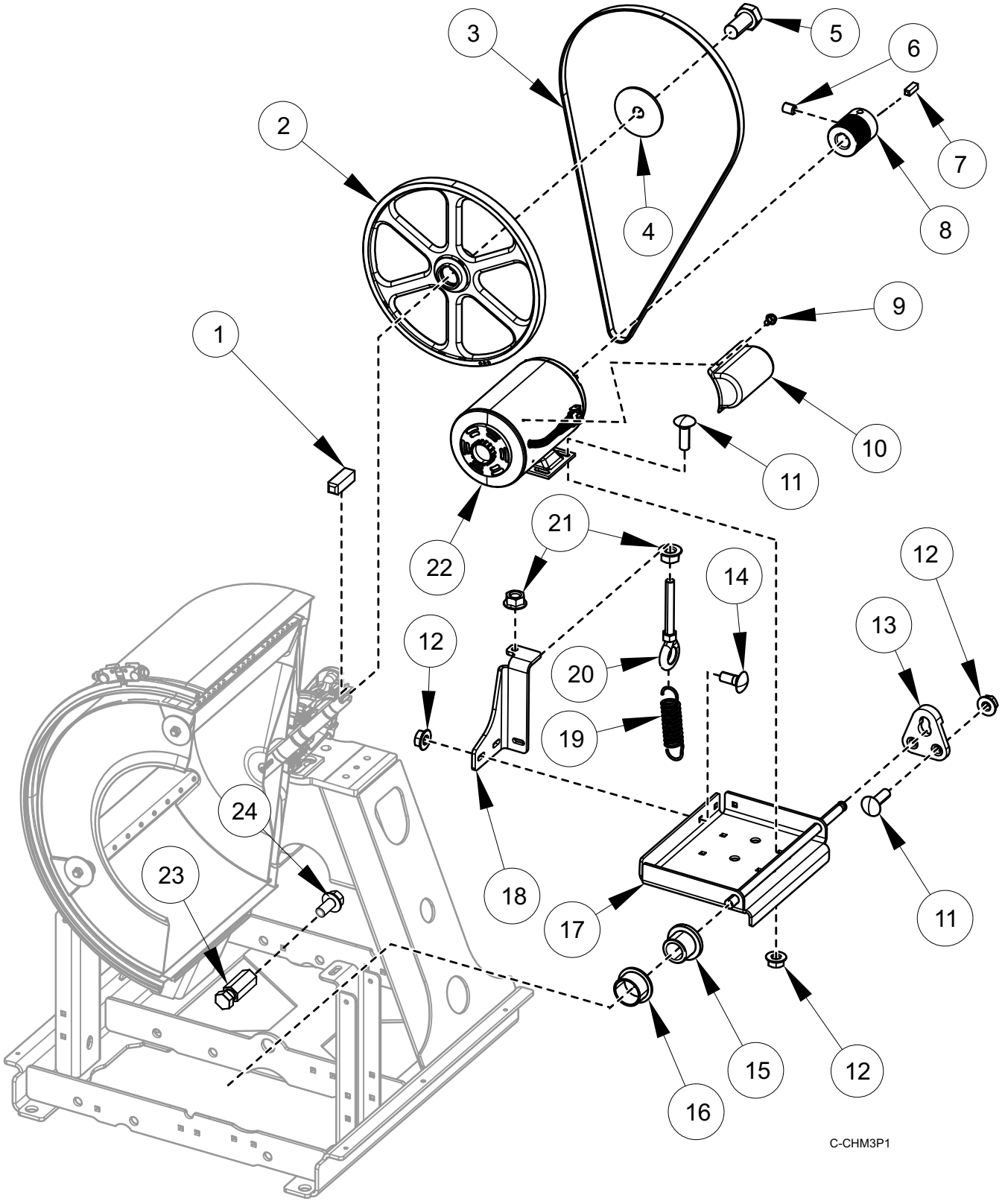

© Copyright, Alliance Laundry Systems LLC – DO NOT COPY or TRANSMIT

Motor, Pulley and Belt - 20 and 30 Pound Models

REF	PART NO.	DESCRIPTION	COMMENTS
	F8733806	Gasket	EMI 17.8 inch
	F8733801	Gasket	EMI 21 inch
	F8733802	Gasket	EMI 24 inch
	F8519001	Motor Harness	1 hp; 120-240 Volt
	F8719402	Motor Harness	1 hp; 380-480 Volt; IEC shielded models starting September 2021; Design 4, 6 and 7
	F8519006	Motor Harness	1 hp; 120-240 Volt; EMI filter models through August 2021
	F8519002	Motor Harness	1 hp; 380-480 Volt
	F8519007	Motor Harness	1 hp; 380-480 Volt; EMI filter models through August 2021
	F8719402	Motor Harness	1 hp; 120-240 Volt; IEC shielded models starting September 2021; Design 4, 6 and 7
	F8773901	Motor Harness	1 hp; 120-240 Volt; Design 8
	F8774001	Motor Harness	1 hp; 120-240 Volt; Design 8; IEC shielded models
	F8748601	Spring Stud Kit	
1	F430801	Key	
2	F8511601	Basket Pulley	20 pound models
	F8511701	Basket Pulley	30 pound models
3	F8382811	Belt	20 pound models; Poly-V; 560J6
	F8382812	Belt	30 pound models; Poly-V; 690J6
4	F431115	Washer	
5	F8574001	Screw	
6	M400077	Screw	
7	H8752006H	Key	
8	F8525301	Motor Pulley	
9	23222	Screw	
10	F8732401	Motor Conduit Mounting Bracket	Design 6 and 7 IEC models
	70521901	Motor Conduit Mounting Bracket	All other models
11	F8402801	Bolt	
12	44087201	Nut	
13	F8441101	Motor Rod Plate	
14	70062401	Bolt	
15	F8535202	Flanged Isolator	
16	F8333302	Flanged Bushing	
17	F8589001	Motor Bracket Weldment	
18	F8581201	Spring Bracket	
19	F310124	Extension Spring	
20	F8319503	Eye Bolt	
21	44087301	Nut	
22	F8509601P	Motor	1 hp; 230 Volt; Design 4, 6 and 7
	F8509701	Motor	1 hp; 460 Volt; Design 4, 6 and 7
	F8765701P	Motor	1 hp; 230 Volt; Design 8
	F8765801	Motor	1 hp; 460 Volt; Design 8
23	F8634701	Stud	
24	70126104	Screw	

© Copyright, Alliance Laundry Systems LLC – DO NOT COPY or TRANSMIT

Motor, Pulley and Belt - 40 and 60 Pound Models

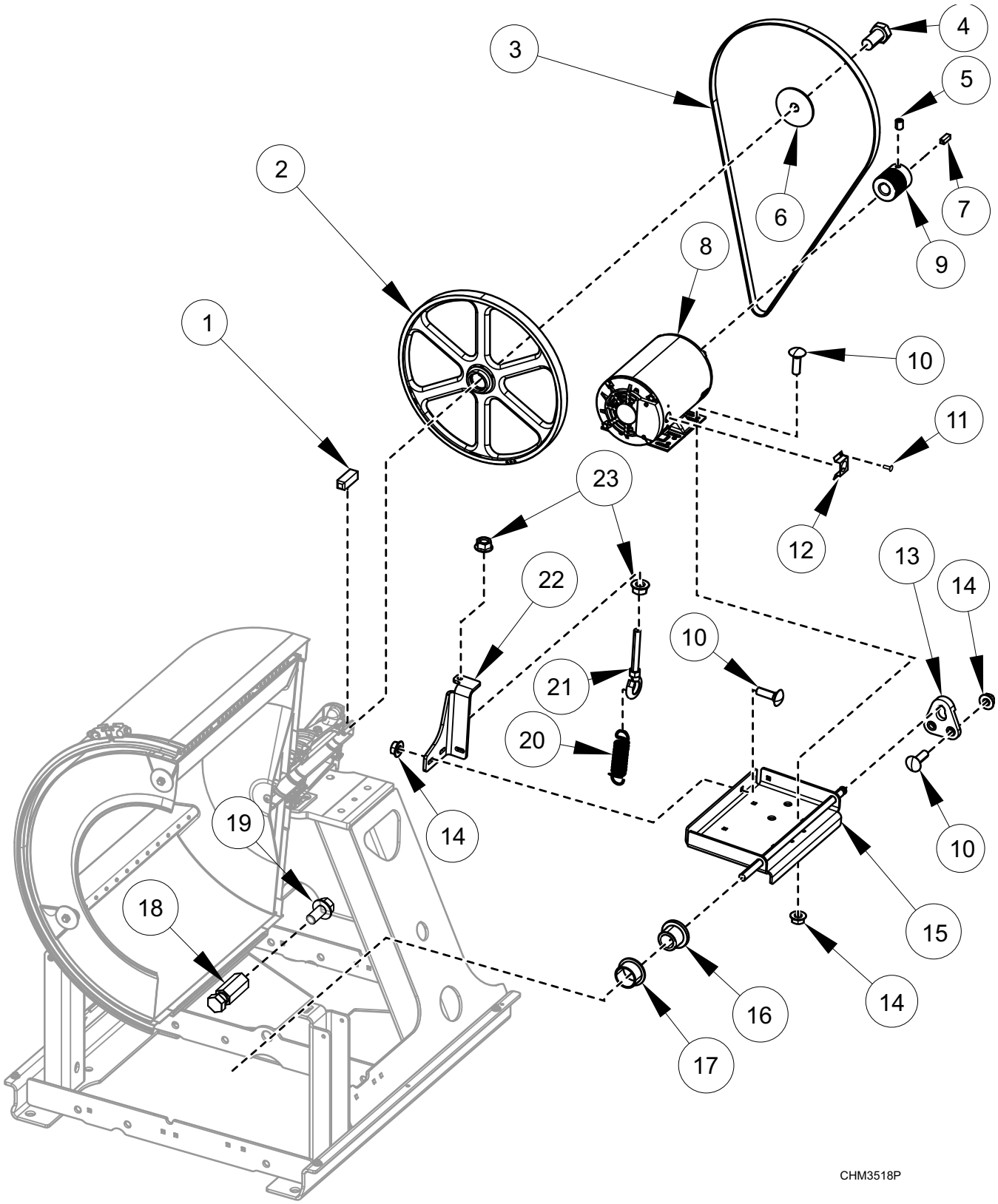

© Copyright, Alliance Laundry Systems LLC – DO NOT COPY or TRANSMIT

Motor, Pulley and Belt - 40 and 60 Pound Models

REF	PART NO.	DESCRIPTION	COMMENTS
	F8519003	Motor Harness	2-3 hp; 240 Volt; B, Q, W, X and Y voltage
	F8719403	Motor Harness	2-3 hp; B, Q, W, X and Y voltage; IEC shielded models starting September 2021; Design 4, 6 and 7
	F8719404	Motor Harness	2-3 hp; N and P voltage; IEC shielded models starting September 2021; Design 4, 6 and 7
	F8519004	Motor Harness	2-3 hp; 480 Volt; N and P voltage
	F8519005	Motor Harness	5 hp; Design 4, 5 and 7
	F8773903	Motor Harness	5 hp; Design 8
	F8519008	Motor Harness	B, Q, W, X and Y voltage; EMI filter models through August 2021
	F8519009	Motor Harness	N and P voltage; EMI filter models through August 2021
	F8773901	Motor Harness	120-240 Volt; Design 8
	F8774001	Motor Harness	120-240 Volt; Design 8; IEC shielded models
	F8776501	Jumper	120-240 Volt; Design 8
	F8776502	Jumper	380-480 Volt; Design 8
	F8733806	Gasket	EMI 17.8 in.
	F8733803	Gasket	EMI 25.6 in.
	F8733804	Gasket	EMI 29 in.
	F8748601	Spring Stud Kit	
1	F430801	Key	
2	F8511701	Basket Pulley	40 pound models
	F8511801	Basket Pulley	60 pound models
3	F8382813	Belt	40 pound models; Poly-V; 717J8
	F8382818	Belt	60 pound models; Poly-V; 765J10
4	F8574001	Screw	
5	M400077	Screw	
6	F431115	Washer	
7	H8752006H	Key	
8	F8564101P	Motor	2 hp; 230/460 Volt; Design 4, 6 and 7; 40 pound models
	F8564102P	Motor	3 hp; 230/460 Volt; Design 4, 6 and 7; 60 pound models
	F8765901P	Motor	2 hp; 230/460 Volt; Design 8; 40 pound models
	F8766001	Motor	3 hp; 230/460 Volt; Design 8; 60 pound models
	F8510001P	Motor	5 hp; 460 Volt; Design 4, 5 and 7
	F8766101	Motor	5 hp; 460 Volt; Design 8
9	F8525301	Motor Pulley	40 pound models
	F8525302	Motor Pulley	60 pound models
10	F8402801	Bolt	
11	23222	Screw	
12	F8732801	Bracket	Design 6 and 7; IEC models
	70521901	Motor Conduit Mounting Bracket	All other models
13	F8441101	Motor Rod Plate	
14	44087201	Nut	
15	F8589002	Motor Bracket Weldment	
16	F8535202	Flanged Isolator	
17	F8333302	Flanged Bushing	
18	F8634701	Stud	
19	70126104	Screw	
20	F310124	Extension Spring	40 pound models
	F8440701	Extension Spring	60 pound models
21	F8319503	Eye Bolt	
22	F8581201	Spring Bracket	
23	44087301	Nut	

© Copyright, Alliance Laundry Systems LLC – DO NOT COPY or TRANSMIT

Electric Heating

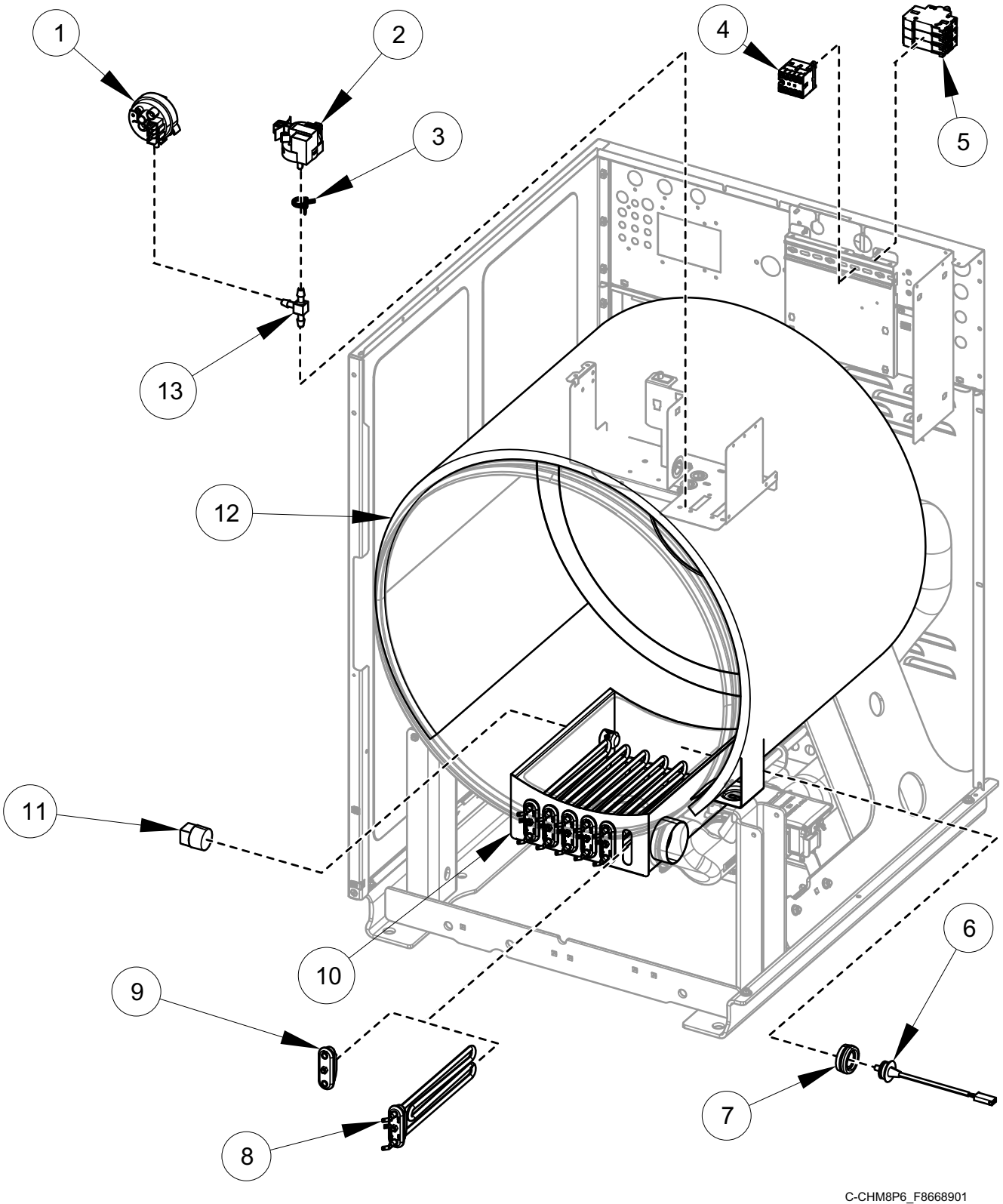

© Copyright, Alliance Laundry Systems LLC – DO NOT COPY or TRANSMIT

Electric Heating

REF	PART NO.	DESCRIPTION	COMMENTS
	F8584801	Electric Heat Element Harness	3 element ground
	F8584802	Electric Heat Element Harness	6 element ground
	F8619101	Power Harness	
	F8564001	Harness	Heater; 20 and 30 pound models; N and P Voltage
	F8564002	Harness	Heater; 20 and 30 pound models; Q Voltage
	F8564003	Harness	Heater; 40 and 60 pound models; N, P and Q Voltage
	F8598301	Harness	Thermistor; 20 and 30 pound models
	F8598302	Harness	Thermistor; 40 and 60 pound models
	F8568901	Jumper	40 and 60 pound models with N voltage
	F8569001	Jumper	40 and 60 pound models with P voltage; 20 and 30 pound models with N and P voltage
1	F8609101	Water Level Pressure Switch	
2	F8623401	Pressure Sensor	
3	39282	Hose Clamp	
4	70482601	Contactor	
5	70488101	Circuit Breaker	
6	F8538801	Thermistor	
7	2251000400	Temperature Probe Grommet	
8	F8568401	Heating Element	2600W; 240 Volt
	F8568402	Heating Element	3400W; 277 Volt
	F8568301	Heating Element	4200W; 230 Volt
9	F360202	Heating Element Plug	
10	F8512102	Shell	20 pound models; Design 4, 6 and 7
	F8514002	Shell	30 pound models; Design 4, 6 and 7
	F8512202	Shell	40 pound models; Design 4, 6 and 7
	F8543702	Shell	60 pound models; Design 4, 6 and 7
	F8781102	Shell	20 pound models; Design 8
	F8781202	Shell	30 pound models; Design 8
	F8781302	Shell	40 pound models; Design 8
	F8781402	Shell	60 pound models; Design 8
11	F420408	Plug	20, 30 and 40 pound models
	F420409	Plug	60 pound models
12	F8209101	Insulation	20 pound models
	F8209102	Insulation	30 pound models
	F8209103	Insulation	40 pound models
	F8209104	Insulation	60 pound models
13	203464	Barbed Tee	

© Copyright, Alliance Laundry Systems LLC – DO NOT COPY or TRANSMIT

Steam Heating - 40 and 60 Pound Models

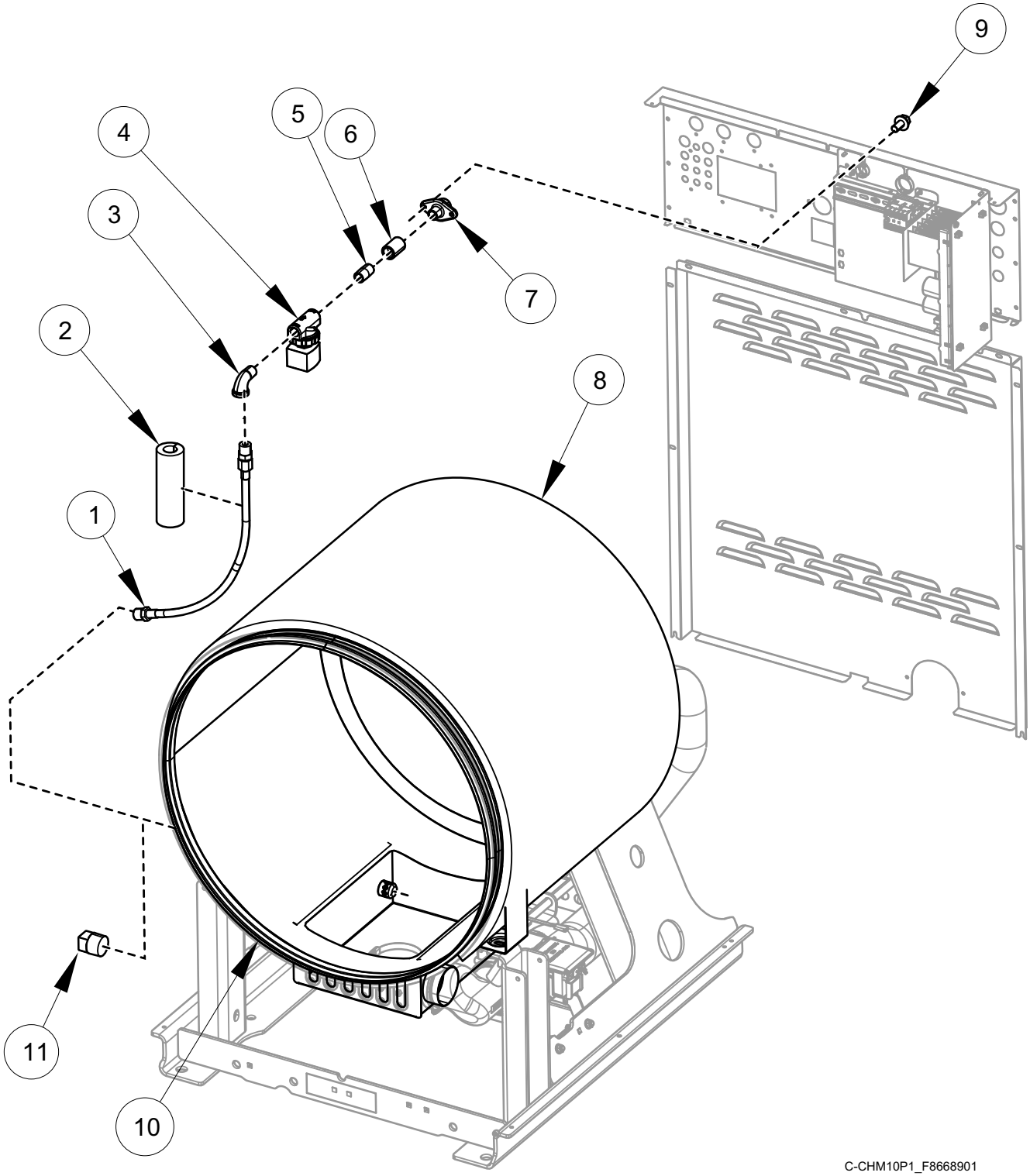

© Copyright, Alliance Laundry Systems LLC – DO NOT COPY or TRANSMIT

Steam Heating - 40 and 60 Pound Models

REF	PART NO.	DESCRIPTION	COMMENTS
	F8662602	Steam Kit	40 pound models; Includes Items 1-7, 9, 11, 901403 Pipe Nipple, F270307 Steam Filter, F8520704 Harness, insulation and labels
	F8662601	Steam Kit	60 pound models; Includes Items 1-7, 9, 11, 901403 Pipe Nipple, 70214101 Pipe Nipple, F270307 Steam Filter, F8520704 Harness, insulation and labels
	F270307	Steam Filter	1/2 inch
	F270308	Steam Filter	3/4 inch
	F8520704	Harness	Steam Valve
	F8233704	Insulation	Steam pipe; 12 inches
	F8233708	Pipe Insulation	Steam pipe; 20 inches
	F410300	Pipe Insulation	Steam pipe; 36 inches
	F8379505	Valve Rebuild Kit	Use with F8322805 Valve
1	F200153P	Steam Hose	40 pound models
	F200197	Steam Hose	60 pound models
2	F8233702	Insulation	Steam pipe; 6 inches
3	H86070034	Street Elbow	
4	F8322805	Valve	Use F8379505 Valve Rebuild Kit
	F8515001	Coil	
5	70435601	Pipe Nipple	
6	F8116301	Coupling	
7	F8362701	Coupling	
8	F8209103	Insulation	40 pound models
	F8209104	Insulation	60 pound models
9	70321501	Screw	
10	F8512202	Shell	40 pound models
	F8543702	Shell	60 pound models
11	F420409	Plug	40 pound models
	F420408	Plug	60 pound models

© Copyright, Alliance Laundry Systems LLC – DO NOT COPY or TRANSMIT

Special Tools and Kits

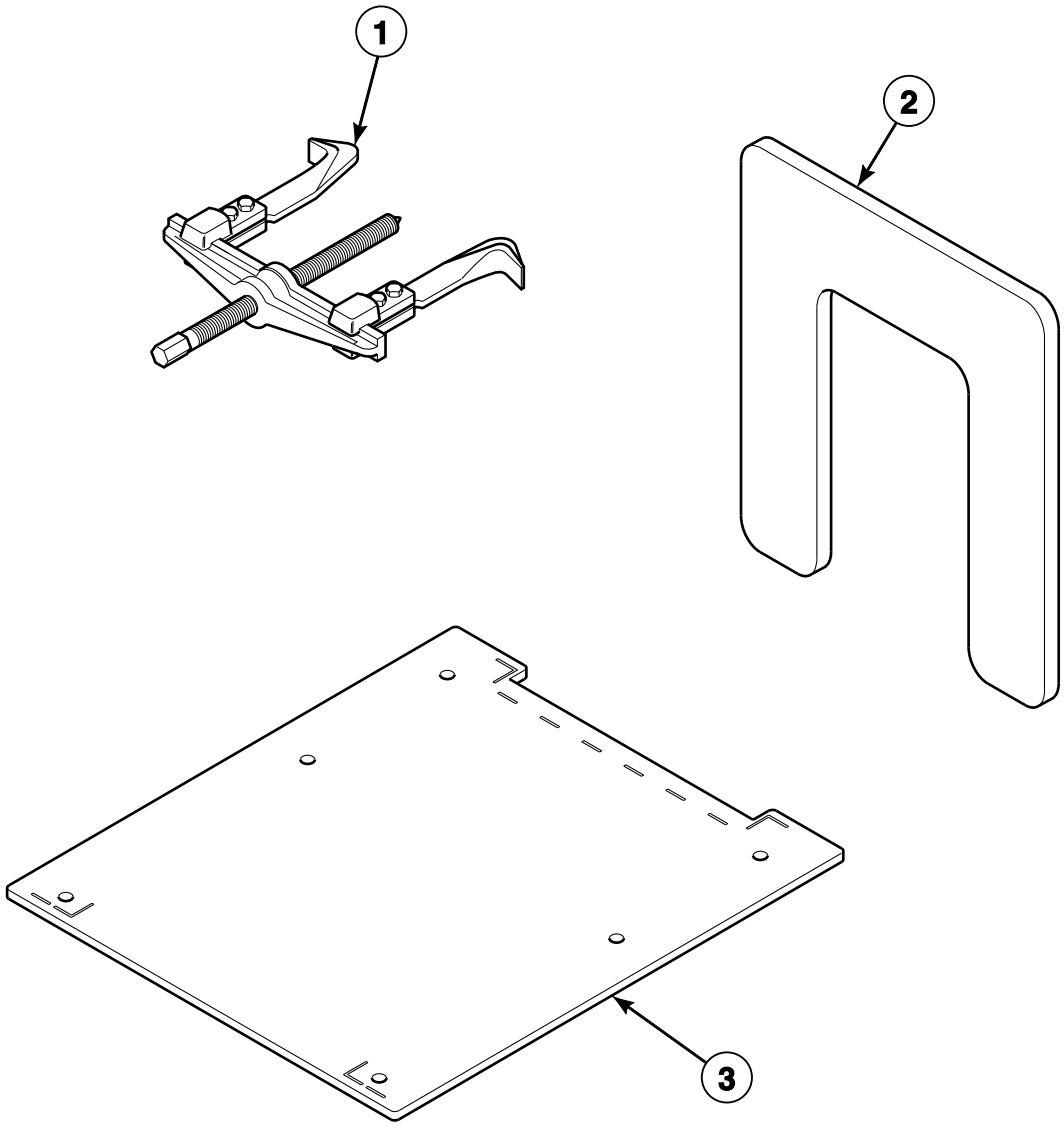

CHM3486P_F8668901

© Copyright, Alliance Laundry Systems LLC – DO NOT COPY or TRANSMIT

Special Tools and Kits

REF	PART NO.	DESCRIPTION	COMMENTS
	1111P	Concrete Kit	5/8 inch
	389P4	Basket Tool Kit	Purchase; Requires item 1
	390P4-1	Basket Rental Tool Kit	Purchase; Requires item 1
	203346	USB IR Interface Kit	
1	F460129	Bearing Puller Tool	
2	F8608502	Basket Pulley Puller Tool	Use with item 1
3	F8433301	Frame Template	20 pound models
	F8433401	Frame Template	30 pound models
	F8433501	Frame Template	40 pound models
	F8433601	Frame Template	60 pound models

© Copyright, Alliance Laundry Systems LLC – DO NOT COPY or TRANSMIT

Notes

© Copyright, Alliance Laundry Systems LLC – DO NOT COPY or TRANSMIT

Parts Index

A

Access Cover
F8047801 ..... 87, 89, 91, 93

Access Panel
F8524001 ..... 53, 55, 57
F8524101 ..... 53, 55, 57
F8524201 ..... 53, 55, 57
F8553901 ..... 53, 55, 57

Access Panel Retaining Spacer
F8609701 ..... 53, 55, 57

App Pay Overlay Kit
44374701 ..... 11, 15, 17, 19

Auxiliary Fill Hose
F8598501 93

B

Backflow Preventer
800310 85

Barbed Tee
203464 ..... 11, 99

Basket
F8391302 77
F8391304 77
F8391502 77
F8391504 77
F8391702 79
F8391704 79
F8502802 79
F8502805 79

Basket Pulley
F8511601 95
F8511701 ..... 95, 97
F8511801 97

Basket Pulley Puller Tool
F8608502 103

Basket Rental Tool Kit
390P4-1 103

Basket Tool Kit
389P4 103

Bearing
F100108 81
F100123P 81
F100134 81
F100135 81
F100136P 81
F100137P 81

Bearing Housing
F8246802 81
F8744401R 81
F8744601R 81
F8744701R 81

Bearing Housing Assembly
F8271601P 81
F8271602 81
F8271701P 81
F8271702 81
F8271801P 81
F8271802 81
F8271901P 81
F8271902 81

Bearing Puller Tool
F460129 103

Belt
F8382811 95
F8382812 95
F8382813 97
F8382818 97

Bolt
F430974 ..... 63, 65, 67, 69, 71, 73
F8270701 75
F8402801 ..... 61, 83, 85, 95, 97
F8508101 ..... 63, 65, 67, 69, 71, 73
70062401 95

Bracket
F8571301 85
F8571401 85
F8732801 97

Bushing
70346501 .... 23, 25, 27, 29, 31, 33, 35, 37, 39, 41, 43

C

Cabinet Brace
F8527301 59
F8527401 59
F8527501 59
F8553201 59

Cable
F8521301 59

Cap
F8197701 ..... 87, 89, 91

Chemical Injection Control
804528 ..... 45, 47

Circuit Breaker
70488101 ..... 25, 29, 31, 33, 35, 37, 39, 41, 43, 99

Clip
F8566801 ..... 87, 89, 91, 93

Coil
F8515001 101

Coin Drawer Assembly
F8182001 21

Coin Drop
38963P 15
70441601P 15
70441603 17

Coin Drop Assembly
201141 15
210195 17
210196 17
38462P 15
38463 15
38464P 15
38467 17
38475 15
38519 17
70281102 17
70283102 17
70441602 17
70447301 17

N/A items do not appear in index.

© Copyright, Alliance Laundry Systems LLC – DO NOT COPY or TRANSMIT

70471601 15
70482401 17
70506901 15
Coin Drop Kit
CK077 15
CK097 15
CK122 19
CK503 17
Coin Identification Paper
38725 ..... 15, 17, 19
Coin Meter
F0160737-00 17
Coin Vault Assembly
F8529101 11
Coin Vault Harness
F8519701 11
Concrete Kit
1111P 103
Connector
70493102 ..... 45, 47
Contactor
F330188P 99
70482601 ..... 23, 27, 31, 35, 39, 43
70482701 .... 23, 25, 27, 29, 31, 33, 35, 37, 39, 41, 43
Contactor Tray
F8530901 ..... 23, 27, 31, 35, 39, 43
F8768301 ..... 25, 29, 33, 37, 41
Control Assembly
F8493901P 11
Control Panel Assembly
F8523701 53
F8523801 53
F8523901 53
F8553701 53
F8697101 ..... 55, 57
F8697201 ..... 55, 57
F8697301 ..... 55, 57
F8697401 ..... 55, 57
Control Tray
F8530701 13
Coupling
F8116301 101
F8362701 101

D

Danger Label
F8614501 9
Diaphragm and Guide Kit
G582P3 ..... 87, 89, 91, 93
Diaphragm Kit
F8739101 ..... 87, 89, 91, 93
DIN Rail
B12315401 ..... 25, 29, 31, 33, 35, 37, 39, 41, 43
M412689 ..... 23, 27, 31, 35, 39, 43
DIN Shield
C003103 ..... 25, 29, 33, 37, 41
Dispenser
F8047403 ..... 87, 89, 91, 93
Dispenser Bracket
F8525701 59
Dispenser Cover
F8563201 ..... 87, 89, 91, 93
F8563202 ..... 87, 89, 91, 93
F8563203 ..... 87, 89, 91, 93
F8563204 ..... 87, 89, 91, 93
Dispenser Gasket
B12568601 ..... 87, 89, 91, 93
Dispenser Weldment
F8437902 ..... 87, 89, 91, 93
Door
F8507502 ..... 63, 65
F8507602 ..... 67, 69
F8507702 ..... 71, 73
F8752501P 63, 65
F8752601 ..... 67, 69
F8752701 ..... 71, 73
Door Assembly
F8617203 63
F8617204 63
F8617205 63
F8617206 63
F8617213 65
F8617214 65
F8617215 65
F8617216 65
F8617303 67
F8617304 67
F8617305 67
F8617306 67
F8617313 69
F8617314 69
F8617315 69
F8617316 69
F8617403 71
F8617404 71
F8617405 71
F8617406 71
F8617413 73
F8617414 73
F8617415 73
F8617416 73
Door Bezel
F8658701 ..... 53, 55, 57
F8658901 ..... 53, 55, 57
F8659101 ..... 53, 55, 57
Door Gasket
F200000202 ..... 63, 65
F8111502 ..... 71, 73
F8111602 ..... 67, 69
Door Glass
F8485305 ..... 67, 69
F8485405 ..... 71, 73
F8675701P 63, 65
Door Glass Trim
F8583201 ..... 63, 65
F8583202 ..... 67, 69
F8583203 ..... 71, 73
F8583204 ..... 63, 65
F8583205 ..... 67, 69
F8583206 ..... 71, 73
Door Handle
F8544701 ..... 63, 65, 67, 69, 71, 73
Door Handle Spacer Kit
F8567501 ..... 63, 65, 67, 69, 71, 73
Door Hinge
F190216P 63, 65, 67, 69, 71, 73
Door Hinge Shim Kit
F200131000P 63, 65, 67, 69, 71, 73
Door Latch Arm Assembly
F8221403 ..... 63, 65, 67, 69, 71, 73

N/A items do not appear in index.

© Copyright, Alliance Laundry Systems LLC – DO NOT COPY or TRANSMIT

Door Lock Assembly
F8632401 75
Door Lock Catch
F8344501 75
Door Lock Cover
F8245001 75
Door Lock Harness
F8520201 75
F8520202 75
Door Lock Microswitch
F200203200 75
Door Lock Plate Assembly
F8223202 75
Door Lock Plate Shim
F83344401 75
Door Lock Solenoid Replacement Kit
F977P3 75
Door Lock Switch Lever
F8223401 75
Door Mount
F150271 ..... 63, 65, 67, 69, 71, 73
Double Check Valve
F8301201 ..... 87, 89, 91, 93
Dowel Pin
F8388201 81
Drain Hose
F200165100 83
F8541901 83
F8542001 83
F8542002 83
27154 85
Drain Hose Elbow
35766 85
Drain Tee
F8752101 83
Drain Valve
F8406302 83
F8406308 83
F8602601P 83
F8602602 83
Drain Valve Bracket
F8543101 83
F8543301 83
F8543401 83
F8587701 83
Drain Valve Cover
F200133600 83
F8768801 83
Drain Valve Harness
F8520001 ..... 83, 85
F8520002 ..... 83, 85
Drive Assembly
F8495401P 49
F8496001 49
F8496301P 49
F8496901P 49
F8764701P 51
F8764702P 51
Drive Communication Harness
F8519201 49
F8519202 49
F8519203 49
F8519204 49
Drive Mounting Bracket
F8322401 ..... 49, 51
Drive Panel Base Assembly
F8567001 ..... 23, 27, 31, 35
F8567002 ..... 31, 35
F8567003 ..... 39, 43
F8567004 ..... 39, 43
Drive Power Harness
F8518601 49
F8518602 49
F8518603 49
Drive Shield
F8616901 ..... 23, 27, 31, 35, 39, 43
Drive Terminal Tray
F8530801 ..... 23, 27, 31, 35
F8530803 ..... 39, 43
F8768201 ..... 25, 29, 33, 37, 41

E

Electric Heat Element Harness
F8584801 99
F8584802 99
Electronic Coin Drop Assembly
70294107 19
70513302 19
70513303 19
70513304 19
70513306 19
70513309 19
70513310 19
70513311 19
70513312 19
70513313 19
70513314 19
70513315 19
70513316 19
70513318 19
Electronic Coin Drop Kit
CK099 19
CK100 19
CK101 19
CK109 19
CK110 19
CK113 19
CK115 19
CK116 19
CK117 19
CK118 19
CK119 19
CK120 19
CK121 19
CK125 19
CK500 19
Emergency Stop Bypass Harness
F8549403 11
EMI Filter
F8591601 ..... 23, 31
F8591801 ..... 27, 35, 39
F8637501 ..... 27, 35, 43
F8769701 ..... 25, 29, 33, 37, 41
End Stop
F8449801 ..... 23, 25, 27, 29, 31, 33, 35, 37, 39, 41, 43
Excluder Seal
F8337002 ..... 77, 79
Expansion Clip
70030501 ..... 13, 23, 25, 27, 29, 31, 33, 35, 37, 39, 41, 43, 49, 51, 53, 55, 57, 59, 61, 75, 85

N/A items do not appear in index.

© Copyright, Alliance Laundry Systems LLC – DO NOT COPY or TRANSMIT

Extension Spring
F310124 ..... 95, 97
F8440701 97
External Supply Kit
F8662505 ..... 45, 47
F8662506 ..... 45, 47
F8662507 ..... 45, 47
F8662508 ..... 45, 47
Eye Bolt
F8319503 ..... 95, 97

F

Fill Hose Kit
F8671101 ..... 87, 89, 91, 93
F8671102 ..... 87, 89, 91, 93
F8671201 ..... 87, 89, 91, 93
F8671202 ..... 87, 89, 91, 93
Fill Valve Harness
F8520101 ..... 87, 89, 91
F8520102 93
Filter Kit
F8662801 23
F8662802 31
F8662803 27
F8662804 ..... 35, 39
F8662805 27
F8662806 ..... 35, 43
F8662809 27
F8662810 27
F8662811 ..... 35, 39
F8662812 ..... 35, 43
Flanged Bushing
F8333302 ..... 95, 97
Flanged Isolator
F8535202 ..... 95, 97
Frame Template
F8433301 103
F8433401 103
F8433501 103
F8433601 103
Front Panel
F8524301 53
F8524303 57
F8524401 53
F8524403 57
F8524501 53
F8524503 57
F8554001 53
F8554003 57
F8685301 55
F8686001 55
F8686101 55
F8686201 55
Front Tray Assembly
F8531001 11
F8567301 11
F8567302 11
F8567303 11
F8567304 11
F8567305 11
F8567306 11

G

Gasket
F8542601 59
F8733801 95
F8733802 95
F8733803 97
F8733804 97
F8733806 ..... 95, 97
Gateway
204145P 13
205223P 13
205391P 13
Ground Lug Connector
M411283 ..... 23, 25, 27, 29, 31, 33, 35, 37, 39, 41, 43
Ground Strap
F8772301 ..... 77, 79

H

Harness
F8518401 ..... 27, 35, 39
F8518402 ..... 23, 27
F8518403 ..... 35, 39
F8518404 ..... 23, 27, 39
F8518405 ..... 23, 31
F8518501 ..... 23, 27, 35, 43
F8518502 27
F8518503 ..... 35, 43
F8518504 ..... 27, 35, 37
F8518604 31
F8518605 ..... 27, 35, 43, 49
F8518606 ..... 27, 35, 43, 49
F8518607 39
F8519301 11
F8519501 11
F8519502 11
F8519601 11
F8520601 ..... 45, 47
F8520602 ..... 45, 47
F8520704 101
F8528001 ..... 27, 31, 35, 39, 43
F8528002 27
F8528003 ..... 31, 35, 39, 43
F8528004 ..... 23, 31
F8528005 ..... 27, 35, 39, 43
F8528006 ..... 23, 31
F8528203 ..... 45, 47
F8528204 ..... 45, 47
F8564001 99
F8564002 99
F8564003 99
F8598301 ..... 77, 99
F8598302 ..... 79, 99
F8619102 ..... 23, 27, 29, 31, 35, 39, 43
F8759403 29
F8769301 51
F8769401 ..... 25, 33, 51
F8769402 ..... 29, 37, 41
F8769404 ..... 37, 41
F8773201 51
F8773202 51
F8773203 51
F8773601 41
F8773801 ..... 25, 29, 33, 37
F8773802 ..... 29, 41

N/A items do not appear in index.

© Copyright, Alliance Laundry Systems LLC – DO NOT COPY or TRANSMIT

F8775001 51
F8780101 ..... 29, 37, 41
F8780601 ..... 29, 37, 41
F8780602 ..... 29, 37, 41
Harness Support Bracket
F8744301 ..... 23, 27, 31, 35, 39, 43
F8773101 ..... 25, 29, 33, 37, 41
Heating Element
F8568301 99
F8568401 99
F8568402 99
Heating Element Plug
F360202 99
Hole Plug
F8223801 59
Hose
F8232007 87
F8232010 91
F8232011 89
F8232012 93
Hose Clamp
F200201 ..... 83, 87, 89, 91, 93
F200204 85
F200213 ..... 83, 87, 89, 91, 93
F200215 85
F200219 85
36801 ..... 87, 89, 91, 93
36802 ..... 83, 85
39282 ..... 11, 99
Hot Surface Warning Label
F8609001 9
F8614301 9

I

Input and Output Control Assembly
F8774901P 13
Insulation
F8209101 99
F8209102 99
F8209103 ..... 99, 101
F8209104 ..... 99, 101
F8233702 101
F8233704 101
Insulator
M413862 ..... 23, 25, 27, 29, 31, 33, 35, 37, 39, 41, 43

J

Jumper
F8568901 99
F8569001 99
F8583501 ..... 31, 33, 35, 37, 39, 41, 43
F8776501 97

K

Key
F160420 21
F430801 ..... 95, 97
H8752006H 95, 97
70155603 59

L

Label
D516100 ..... 23, 27, 31, 35, 39, 43
F8601301 9
F8602401 9
F8609401 9
F8611301 ..... 9, 59
F8611401 ..... 9, 59
F8614801 9
203853 9
44286801 ..... 23, 31
44286803 ..... 27, 35, 43

M

Machine ID Control Assembly
203361P 11
Magnet
F8390801 ..... 63, 65, 67, 69, 71, 73
Male Tab Terminal
00621SG 23, 27, 31, 35, 39, 43
Manifold Valve
F8529703P 87, 89, 91, 93
F8529704P 87, 89, 91, 93
Mixing Valve
F8434003 93
F8434004 93
Mixing Valve Screen
F8161201 93
24122 93
Motor
F8509601P 95
F8509701 95
F8564101P 97
F8564102P 97
F8765701P 95
F8765801 ..... 95, 97
F8765901P 97
Motor Bracket Weldment
F8589001 95
F8589002 97
Motor Conduit Mounting Bracket
F8732401 95
70521901 ..... 95, 97
Motor Harness
F8519001 95
F8519002 95
F8519003 97
F8519004 97
F8519006 95
F8519007 95
F8519008 97
F8519009 97
F8719402 95
F8719403 97
F8719404 97
F8773901 95
F8774001 ..... 95, 97
Motor Pulley
F8525301 ..... 95, 97
F8525302 97
Motor Rod Plate
F8441101 ..... 95, 97

N/A items do not appear in index.

© Copyright, Alliance Laundry Systems LLC – DO NOT COPY or TRANSMIT

N

Nameplate
F8688801 ..... 55, 57

Nut
C001236 ..... 63, 65, 67, 69, 73
F0431807-00 ..... 87, 89, 91, 93
F430215 ..... 19, 63, 65, 67, 69, 71, 73
F430218 ..... 77, 79
F430225 75
F430232 ..... 63, 65, 67, 69, 71, 73, 75
F431024 ..... 71, 75
F431041 ..... 63, 65, 67, 69, 71, 73
F8387701 81
36020 ..... 53, 55, 57
44087201 ..... 61, 83, 85, 95, 97
44087301 ..... 77, 79, 95, 97
44088001 .... 23, 25, 27, 29, 31, 33, 35, 37, 39, 41, 43
44088801 59
685846 ..... 11, 15, 17
70030401 83
802337 ..... 59, 77, 79

O

Opto Coupler
200674P 15, 17

O-Ring
F8569101 ..... 87, 89, 91, 93

Overflow Hose
F8521201 83
F8522401 83
F8522501 83

Overflow Plug
F150352 85

Overlay
F8641601 53
F8641602 53
F8641605 53
F8693701 55
F8693702 55
F8693705 55
F8693801 55
F8693802 55
F8693805 55
F8693901 55
F8693902 55
F8693905 55
F8694001 55
F8694002 55
F8694005 55
F8727501 57
F8727502 57
F8727505 57
F8727601 57
F8727602 57
F8727605 57
F8727701 57
F8727702 57
F8727705 57
F8727801 57
F8727802 57
F8727805 57

P

Panel Locator
56079 ..... 53, 55, 57, 61

Panel Lock
44089303P 59

Pin
F8302701 ..... 77, 79
F8502101 61

Pinch Warning Label
F8615701 9
70538401 9

Pipe Insulation
F410300 101
F8233708 101

Pipe Nipple
70435601 101

Plug
F420408 ..... 99, 101
F420409 99
F8223901 59
M400985 59

Pop Rivet
F431215 ..... 53, 55, 57, 59
F431223 ..... 63, 65, 67, 69, 71, 73
M400003 ..... 13, 23, 25, 27, 29, 31, 33, 35, 37, 39, 41, 43
70058501 ..... 11, 15, 17, 23, 25, 27, 29, 31, 33, 35, 37, 39, 41, 43, 87, 89, 91, 93
70412601 ..... 53, 55, 57

Power Distribution Block
M413865 ..... 23, 25, 27, 29, 31, 33, 35, 37, 39, 41, 43

Power Distribution Block Cover
44014901P 23, 25, 27, 29, 31, 33, 35, 37, 39, 41, 43

Power Harness
F8619101 ..... 23, 27, 29, 31, 35, 39, 43, 99

Pressure Cap
F8579301 ..... 83, 85

Pressure Sensor
F8623401 ..... 11, 99

P-Trap Hose
F8529601 87
F8529602 89
F8529603 91
F8529604 93

Pulse Expander Assembly
F8034701P 19

Pump Drain and Bracket Assembly
804038 85
805613 85
805723 85

Pump Drain Bracket
F8536901 85
F8557101 85
F8557301 85

Pump Drain Hose
F8556601 85

Pump Drain Rear Hose
F8537001 85
F8557001 85
F8557201 85

Pushbutton Switch
70413301 59

N/A items do not appear in index.

© Copyright, Alliance Laundry Systems LLC – DO NOT COPY or TRANSMIT

R

Radial Lip Seal
F8203816 81

Rear Drain Hose
F8543001 83
F8543201 83
F8543501 83
F8587301 83

Rear Panel
F8527001 59
F8527101 59
F8527201 59
F8554501 59

Rear Vent Hose
F8616401 87
F8616402 ..... 89, 91
F8616404 93

Reed Switch Assembly
F8066804 75

Retaining Ring
F8337801 81
F8337901 81
F8344901 81
F8345001 81

Rivet
M412763 ..... 53, 55, 57, 61

Rod
F602813-2 ..... 63, 65, 67, 69, 71, 73

S

Screw
D503688 ..... 49, 51
F430532 ..... 63, 65
F430533 ..... 67, 69, 71, 73
F430536 ..... 63, 65, 67, 69, 71, 73
F8117601 ..... 53, 55, 57, 59, 61, 75, 85
F8206901 ..... 13, 23, 25, 27, 29, 31, 33, 35, 37, 39, 41, 43, 59, 85
F8230301 ..... 87, 89, 91, 93
F8368801 81
F8442702 81
F8535501 ..... 53, 55, 57, 63, 65, 67, 69, 71, 73
F8535601 ..... 87, 89, 91, 93
F8574001 ..... 95, 97
F8589501 ..... 53, 55, 57
F8621601 ..... 77, 79
F8658501 85
F8673701 ..... 77, 79
M400077 95
202175 83
23222 ..... 95, 97
2916 59
33562 ..... 25, 29, 33, 37, 41, 59
39733 ..... 23, 25, 27, 29, 31, 33, 35, 37, 39, 41, 43
403497 ..... 45, 47
430497 13
51780 59
51783 ..... 23, 25, 27, 29, 31, 33, 35, 37, 39, 41, 43
685837 ..... 23, 25, 27, 29, 31, 33, 35, 37, 39, 41, 43
70126104 ..... 95, 97
70321501 101
800548 ..... 87, 89, 91, 93

Seal Scupper Pad
F8350302 81

Set Screw
M400077 97

Shaft Seal Sleeve Kit
F8343906P 77, 79

Shell
F8512101 77
F8512102 ..... 77, 99
F8512201 79
F8512202 ..... 79, 99, 101
F8514001 77
F8514002 ..... 77, 99
F8543701 79
F8543702 ..... 79, 99, 101
F8781101 77
F8781102 ..... 77, 99
F8781201 77
F8781202 ..... 77, 99
F8781301 79
F8781302 ..... 79, 99
F8781401 79
F8781402 ..... 79, 99

Shell Band Kit
F8537801 77
F8537802 77
F8537803 79
F8537804 79

Shell Front
F8222301 77
F8222401 77
F8222501 79
F8222601 79

Shock Warning Label
F8614201 9

Side Panel
F8524601 61
F8524602 61
F8524603 61
F8524604 61
F8524701 61
F8524702 61
F8524703 61
F8524704 61
F8524705 61
F8524801 61
F8524802 61
F8524803 61
F8524804 61
F8524805 61
F8524806 61
F8525605 61
F8525606 61
F8554201 61
F8554202 61
F8554203 61
F8554204 61
F8554205 61
F8554206 61

Siphon Cover
F8047901 ..... 87, 89, 91, 93

Snap Bushing
F140938 ..... 11, 23, 27, 31, 35, 39, 43, 45, 47
M402542 11
M411826 11

Spacer
F431901 75

N/A items do not appear in index.

© Copyright, Alliance Laundry Systems LLC – DO NOT COPY or TRANSMIT

Spring Bracket
F8581201 ..... 95, 97
Spring Pin
F431222 ..... 63, 65, 67, 69, 71, 73
Spring Stud Kit
F8748601 ..... 95, 97
Steam Filter
F270307 101
F270308 101
Steam Hose
F200153P 101
F200197 101
Steam Kit
F8662601 101
F8662602 101
Street Elbow
H86070034 101
Stud
F8634701 ..... 95, 97
70334702 83
Supply Vacuum Hose
F8529401 87
F8529402 89
F8529403 91
F8529404 93

T

Temperature Probe Grommet
2251000400 ..... 77, 79, 99
Terminal
00622SG 13, 23, 25, 27, 29, 31, 33, 35, 37, 39, 41, 43
Terminal Block
430642 ..... 23, 25, 27, 29, 31, 33, 35, 37, 39, 41, 43
Terminal Block Shield
70333001 .... 23, 25, 27, 29, 31, 33, 35, 37, 39, 41, 43
Terminal Tray Cover
F8518301 59
Thermistor
F8538801 ..... 77, 79, 99
Top Cover
F8525401 59
F8525501 59
F8525601 59
F8554301 59
Top Cover Hinge
F8258601 59
Top Cover Latch
F8201001 ..... 53, 55, 57
Torsion/Door Lock Spring
F8070301 75
Transformer
F8491101 13
202757 13
202758 13
Triple Lip Seal
F8203801 81
F8203802 81
F8203803 81
F8203806 81
F8203813 81
F8203814 81
F8203815 81
Tubing
F8405302 11
F8405303 11

U

USB IR Interface Kit
203346 103

V

Vacuum Breaker Assembly
F8517501 ..... 87, 89, 91, 93
F8517504 ..... 87, 89, 91, 93
Vacuum Breaker Guard
F8589601 ..... 87, 89, 91, 93
Valve
F8322805 101
F8565201 ..... 87, 89, 91, 93
F8565202 ..... 87, 89, 91, 93
Valve Panel
F8513101 59
F8513201 59
F8513301 59
F8554401 59
Valve Rebuild Kit
F8379505 101

W

Warning Label
F8611601 9
44324001 9
Washer
F430339 81
F431115 ..... 95, 97
F431133 ..... 63, 65, 67, 69, 71, 73
F431147 ..... 63, 65, 67, 69, 71, 73
F431916 ..... 63, 65, 67, 69, 71, 73
F431929 ..... 63, 65, 67, 69, 71, 73
F8193101 75
F8201101 ..... 53, 55, 57
F8402701 ..... 77, 79
M400080 ..... 77, 79
M400081 ..... 77, 79
M405535 61
Water Hose Kit
F8665601 ..... 87, 89, 91, 93
F8665602 ..... 87, 89, 91, 93
F8665603 ..... 87, 89, 91, 93
F8665604 ..... 87, 89, 91, 93
Water Level Pressure Switch
F8609101 ..... 11, 99
Wire Clip
F8449501 ..... 11, 13
70347601 13
70366201 11
Wire Label
44286804 ..... 27, 35, 39
Wireless Harness
F8520403 13
F8520404 13

N/A items do not appear in index.

© Copyright, Alliance Laundry Systems LLC – DO NOT COPY or TRANSMIT

F8674003 13
F8674004 13
Wireless Kit
F8662401 13
F8662402 13
F8676001 13
F8676101 13
Wireless Network Control Assembly
203532 13
807211 13

Y

Y-Connector
223/00243/00 93

N/A items do not appear in index.

© Copyright, Alliance Laundry Systems LLC – DO NOT COPY or TRANSMIT

Notes

© Copyright, Alliance Laundry Systems LLC – DO NOT COPY or TRANSMIT