Washer-Extractor

Cabinet Hardmount

Design 4, 6 and 7

Refer to Page 3 for Model Numbers

Parts

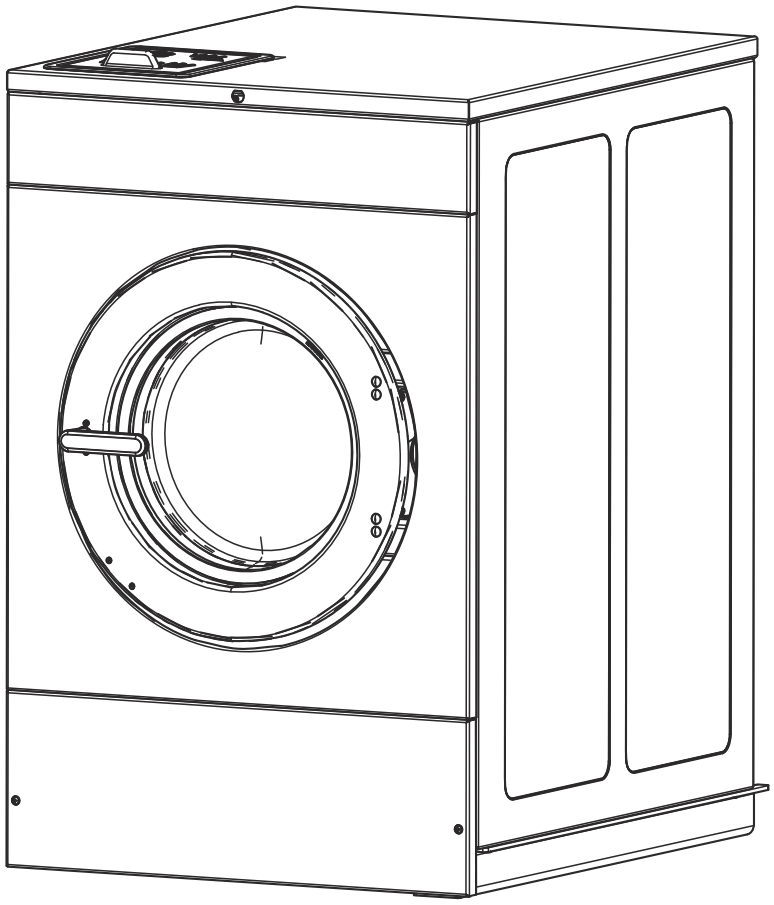

C-CHM2C3_F8674801

Alliance™ Laundry Systems

www.alliancelaundry.com

Part No. F8674801R4
November 2023

Table of Contents

Title	Page
Parts Ordering Information	2
Serial Plate Location	2
Model Identification	3
Product Overview - Galaxy 600 International and Galaxy 600 International Network	4
Labels	6
Control Module and Front Tray Assembly - Coin Models	8
Control Module and Front Tray Assembly - Card Reader and Central Pay Models	10
Control Tray Assembly	12
Flush Mount Coin Meter Assembly - Single Drop	14
Flush Mount Coin Meter Assembly - Dual Drop	16
Electronic Coin Meter Assembly	18
Optional Coin Box	20
Inverter Drive Box - Q and X Voltage	22
Inverter Drive Box - N and P Voltage	24
External Supply Kit	26
Inverter Drive	28
Front Panels and Control Panel - Coin Models - Design 4	30
Front Panels and Control Panel - Coin Models - Design 6	32
Front Panels and Control Panel - Coin Models - Design 7	34
Front Panels and Control Panel - Card Ready and Central Pay Models - Design 4	36
Front Panels and Control Panel - Card Ready and Central Pay Models - Design 6	38
Front Panels and Control Panel - Card Ready and Central Pay Models - Design 7	40
Rear and Top Panels	42
Side Panels	44
Door (Drawing 1 of 2)	46
Door (Drawing 2 of 2)	48
Door Lock	50
Shell Front and Basket	52
Shell	54
Bearing Housing and Frame Shield	56
Drain Plumbing	58
Fill Plumbing	60
Motor, Pulley and Belt	62
Electric Heating	64
Steam Heating	66
Special Tools and Kits	68
Parts Index	71

© Copyright 2022, Alliance Laundry Systems LLC

All rights reserved. No part of the contents of this book may be reproduced or transmitted in any form or by any means without the expressed written consent of the publisher.

Parts Ordering Information

If literature or replacement parts are required, contact the source from whom the machine was purchased or contact Alliance Laundry Systems at (920) 748-3950 for the name and address of the nearest authorized parts distributor.

For technical assistance, call the number listed below:

(920) 748-3121 Ripon, Wisconsin

Serial Plate Location

When calling or writing about your product, be sure to mention model and serial numbers. Model and serial numbers are located on serial plate(s) as shown.

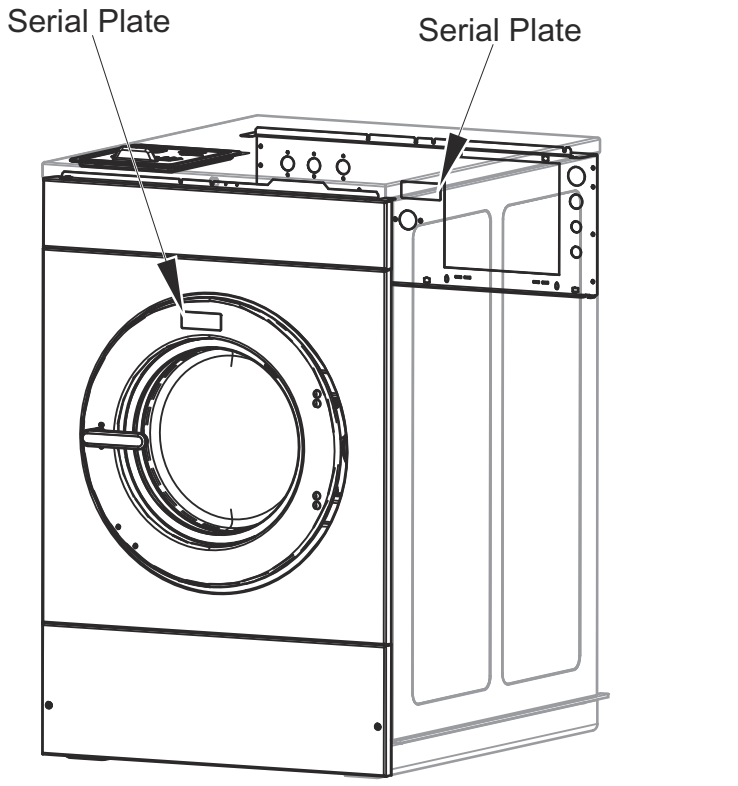

C-CHM2C2_F8674801

© Copyright, Alliance Laundry Systems LLC – DO NOT COPY or TRANSMIT

Model Identification

Information in this manual is applicable to these washer-extractor models:

HCA080NC
HCA080ND
HCA080NE
HCA080NF
HCA080NH
HCA080NL
HCA080NQ
HCA080NT
HCA080NV
HCA080NX
HCA080NY
HCA080WC
HCA080WD
HCA080WE
HCA080WF
HCA080WH
HCA080WL
HCA080WT
HCA080WV
HCA080WX
HCA080WY
HCA100NC
HCA100ND
HCA100NE
HCA100NF
HCA100NH
HCA100NL
HCA100NQ
HCA100NT
HCA100NV
HCA100NX
HCA100NY
HCA100WC
HCA100WD
HCA100WE
HCA100WF
HCA100WH
HCA100WL
HCA100WT
HCA100WV
HCA100WX
HCA100WY

HCG080NC
HCG080ND
HCG080NE
HCG080NF
HCG080NH
HCG080NL
HCG080NQ
HCG080NT
HCG080NV
HCG080NX
HCG080NY
HCG080WC
HCG080WD
HCG080WE
HCG080WF
HCG080WH
HCG080WL
HCG080WT
HCG080WV
HCG080WX
HCG080WY
HCG100NC
HCG100ND
HCG100NE
HCG100NF
HCG100NH
HCG100NL
HCG100NQ
HCG100NT
HCG100NV
HCG100NX
HCG100NY
HCG100WC
HCG100WD
HCG100WE
HCG100WF
HCG100WH
HCG100WL
HCG100WT
HCG100WV
HCG100WX
HCG100WY

HCH080NC
HCH080ND
HCH080NE
HCH080NF
HCH080NH
HCH080NL
HCH080NQ
HCH080NT
HCH080NV
HCH080NX
HCH080NY
HCH080WC
HCH080WD
HCH080WE
HCH080WF
HCH080WH
HCH080WL
HCH080WQ
HCH080WT
HCH080WV
HCH080WX
HCH080WY
HCH100NC
HCH100ND
HCH100NE
HCH100NF
HCH100NH
HCH100NL
HCH100NQ
HCH100NT
HCH100NV
HCH100NX
HCH100NY
HCH100WC
HCH100WD
HCH100WE
HCH100WF
HCH100WH
HCH100WL
HCH100WQ
HCH100WT
HCH100WV
HCH100WX
HCH100WY

HCJ080NC
HCJ080ND
HCJ080NE
HCJ080NF
HCJ080NH
HCJ080NL
HCJ080NQ
HCJ080NT
HCJ080NV
HCJ080NX
HCJ080NY
HCJ080WC
HCJ080WD
HCJ080WE
HCJ080WF
HCJ080WH
HCJ080WL
HCJ080WQ
HCJ080WT
HCJ080WV
HCJ080WX
HCJ080WY
HCJ100NC
HCJ100ND
HCJ100NE
HCJ100NF
HCJ100NH
HCJ100NL
HCJ100NQ
HCJ100NT
HCJ100NV
HCJ100NX
HCJ100NY
HCJ100WC
HCJ100WD
HCJ100WE
HCJ100WF
HCJ100WH
HCJ100WL
HCJ100WQ
HCJ100WT
HCJ100WV
HCJ100WX
HCJ100WY
HCK080NH
HCK100NH

HCU080NC
HCU080ND
HCU080NE
HCU080NF
HCU080NH
HCU080NL
HCU080NQ
HCU080NT
HCU080NV
HCU080NX
HCU080NY
HCU080WC
HCU080WD
HCU080WE
HCU080WF
HCU080WH
HCU080WL
HCU080WQ
HCU080WT
HCU080WV
HCU080WX
HCU080WY
HCU100NC
HCU100ND
HCU100NE
HCU100NF
HCU100NH
HCU100NL
HCU100NQ
HCU100NT
HCU100NV
HCU100NX
HCU100NY
HCU100WC
HCU100WD
HCU100WE
HCU100WF
HCU100WH
HCU100WL
HCU100WQ
HCU100WT
HCU100WV
HCU100WX
HCU100WY

© Copyright, Alliance Laundry Systems LLC – DO NOT COPY or TRANSMIT

Product Overview - Galaxy 600 International and Galaxy 600 International Network

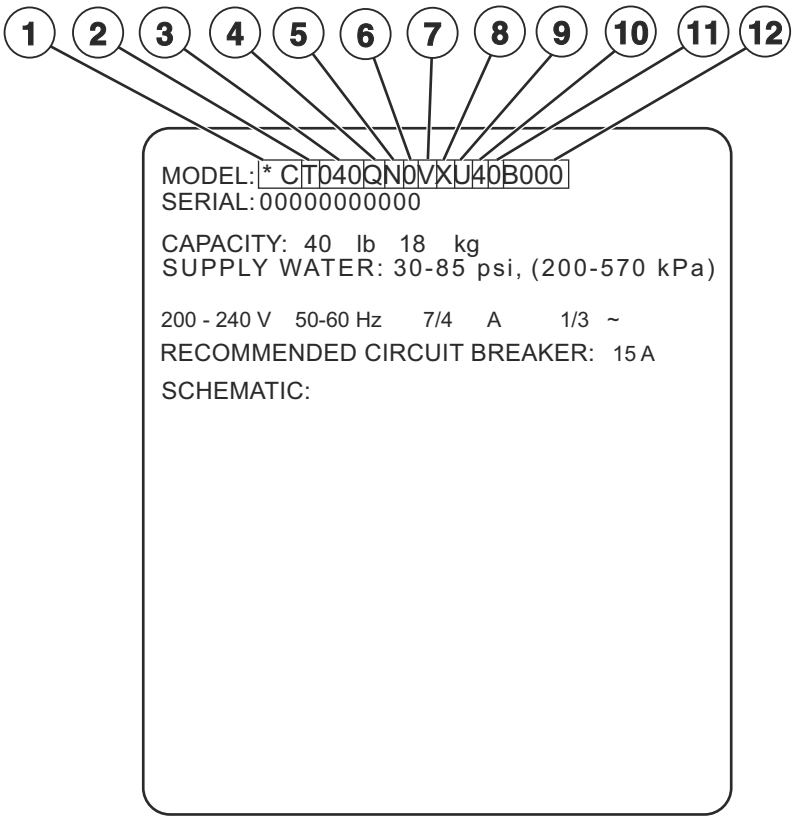

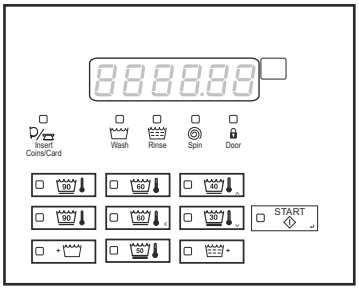

Galaxy 600 International and Galaxy 600 International Network

CHM3499P_F8674801

© Copyright, Alliance Laundry Systems LLC – DO NOT COPY or TRANSMIT

Product Overview - Galaxy 600 International and Galaxy 600 International Network

REF	PART NO.	DESCRIPTION	COMMENTS
1	-	Product Family	HC
2	-	Market Approvals	A (Australia ICE) D (Brazil IEC) G (International) H (China-ROHS IEC) J (Japan-PSE IEC) K (Korea IEC) L (Thailand-TISI IEC) T (North America) U (International CE/EAC)
3	-	Capacity (Dry Weight in Pounds)	080 100
4	-	Control	N W
5	-	Actuation	L (Central Pay) X (Prep for Coin) Y (Prep for Card) C (Single Coin) D (Dual Coin) E (Electronic Drop) T (Token) F (Single Coin + CD Lock and Key) Q (Dual Coin + CD Lock and Key) H (Electronic Drop + CD Lock and Key) V (Token + CD Lock and Key)
6	-	Coin Meter	0 (Standard) 1 (CD Lock & Key)
7	-	Speed	F (F-Speed) V (V-Speed)
8	-	Voltage	B (120/60/1) W (200-240/50/1/3) Y (200-240/60/1/3) X (200-240/50-60/1/3) Q (200-240/50-60/3) P (380-415/50-60/3) N (440-480/50-60/3)
9	-	Panel	B (Chrome Door) C (Chrome Door) U (Vinyl) 1 (Stainless Steel Side)
10	-	Design	4 6 7
11	-	Heat	0 (Standard) D (Steam) E (Electric Heat) P (Prep for Steam)
12	-	Features and Options	

© Copyright, Alliance Laundry Systems LLC – DO NOT COPY or TRANSMIT

Labels

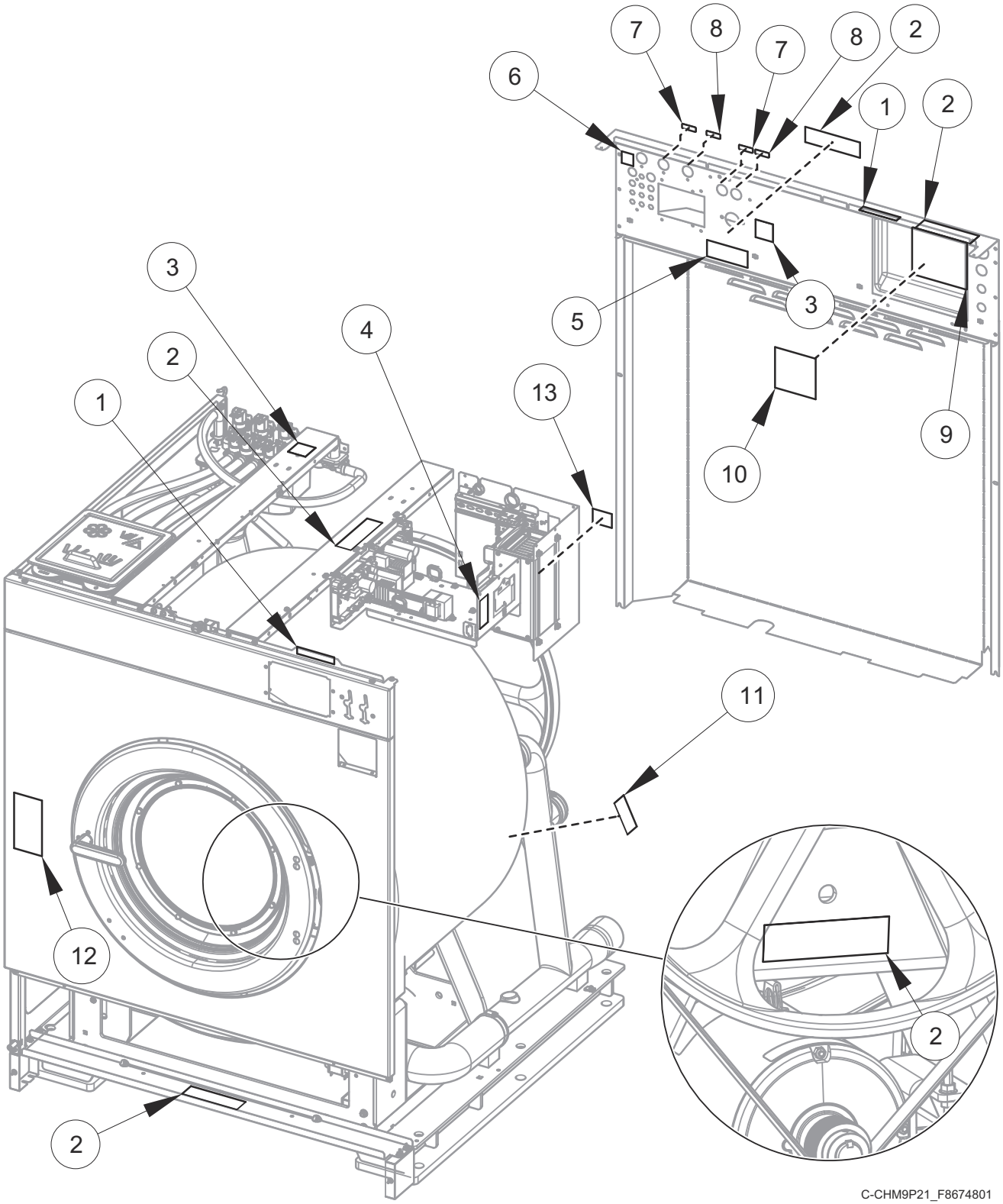

© Copyright, Alliance Laundry Systems LLC – DO NOT COPY or TRANSMIT

Labels

REF	PART NO.	DESCRIPTION	COMMENTS
1	F8614501	Danger Label	English/Quebec/French
2	44324001	Warning Label	Pinch/Shock; English/French
	F8614201	Shock Warning Label	Icon
	F8615701	Pinch Warning Label	Icon
3	F8614301	Hot Surface Warning Label	English/Quebec/French
	F8609001	Hot Surface Warning Label	Icon
4	F8601301	Label	Warning; Underground components
5	F8609401	Label	Notice; Chemical connection
6	203853	Label	ROHS (China)
7	F8611301	Label	Hot water; Icon
8	F8611401	Label	Cold water; Icon
9	F8611601	Warning Label	Warning; English/Quebec/French
10	F8602401	Label	Notice; Large expansion board
11	70538401	Pinch Warning Label	English/French
	F8615701	Pinch Warning Label	Icon
12	F8614801	Label	Warning fire/injury; English/Quebec/French
13	F8620801	Label	Warning current leakage

© Copyright, Alliance Laundry Systems LLC – DO NOT COPY or TRANSMIT

Control Module and Front Tray Assembly - Coin Models

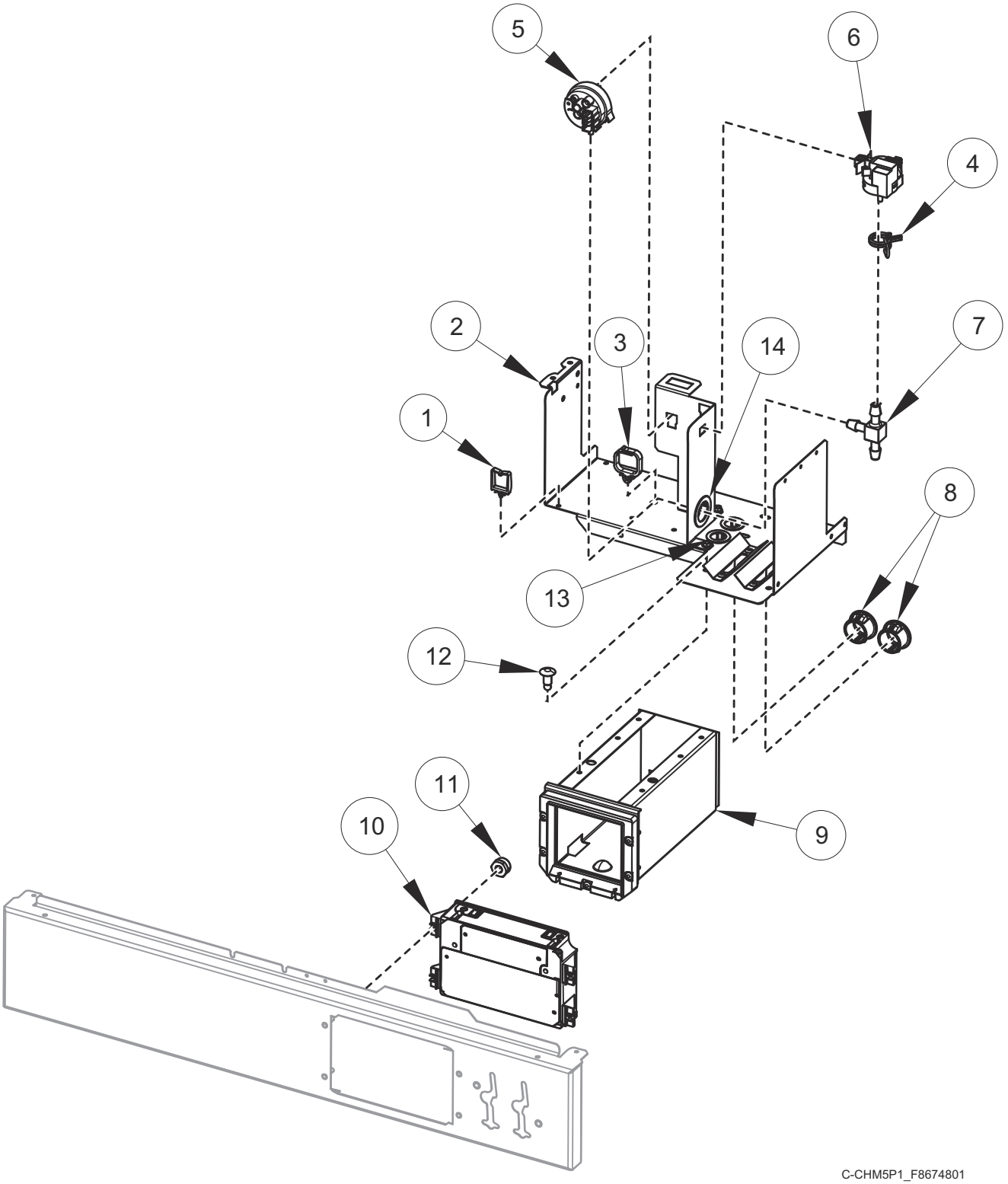

© Copyright, Alliance Laundry Systems LLC – DO NOT COPY or TRANSMIT

Control Module and Front Tray Assembly - Coin Models

REF	PART NO.	DESCRIPTION	COMMENTS
	44374701	App Pay Overlay Kit	
	203361P	Machine ID Control Assembly	
	F8567303	Front Tray Assembly	Includes items 1-3, 6, 8, 9, 12-14, 70413301 Pushbutton Switch and F8519701 Coin Vault Harness
	F8567306	Front Tray Assembly	Steam or electric heat; Includes items 1-9, 12-14, 70413301 Pushbutton Switch and F8519701 Coin Vault Harness
	F8519701	Coin Vault Harness	
	F8519301	Harness	Tray power harness
	F8519502	Harness	Communication
	F8519601	Harness	Coin access
	F8519403	Emergency Stop Bypass Harness	
1	70366201	Wire Clip	
2	F8531001	Front Tray Assembly	
3	F8449501	Wire Clip	
4	39282	Hose Clamp	
5	F8609101	Water Level Pressure Switch	Steam or electric heat
	F8405303	Tubing	Electric heat
6	F8623401	Pressure Sensor	
	F8405302	Tubing	Electric heat
7	203464	Barbed Tee	Steam or electric heat
8	M411826	Snap Bushing	
9	F8529101	Coin Vault Assembly	
10	F8493901P	Control Assembly	
11	685846	Nut	
12	70058501	Pop Rivet	
13	F140938	Snap Bushing	
14	M402542	Snap Bushing	

© Copyright, Alliance Laundry Systems LLC – DO NOT COPY or TRANSMIT

Control Module and Front Tray Assembly - Card Reader and Central Pay Models

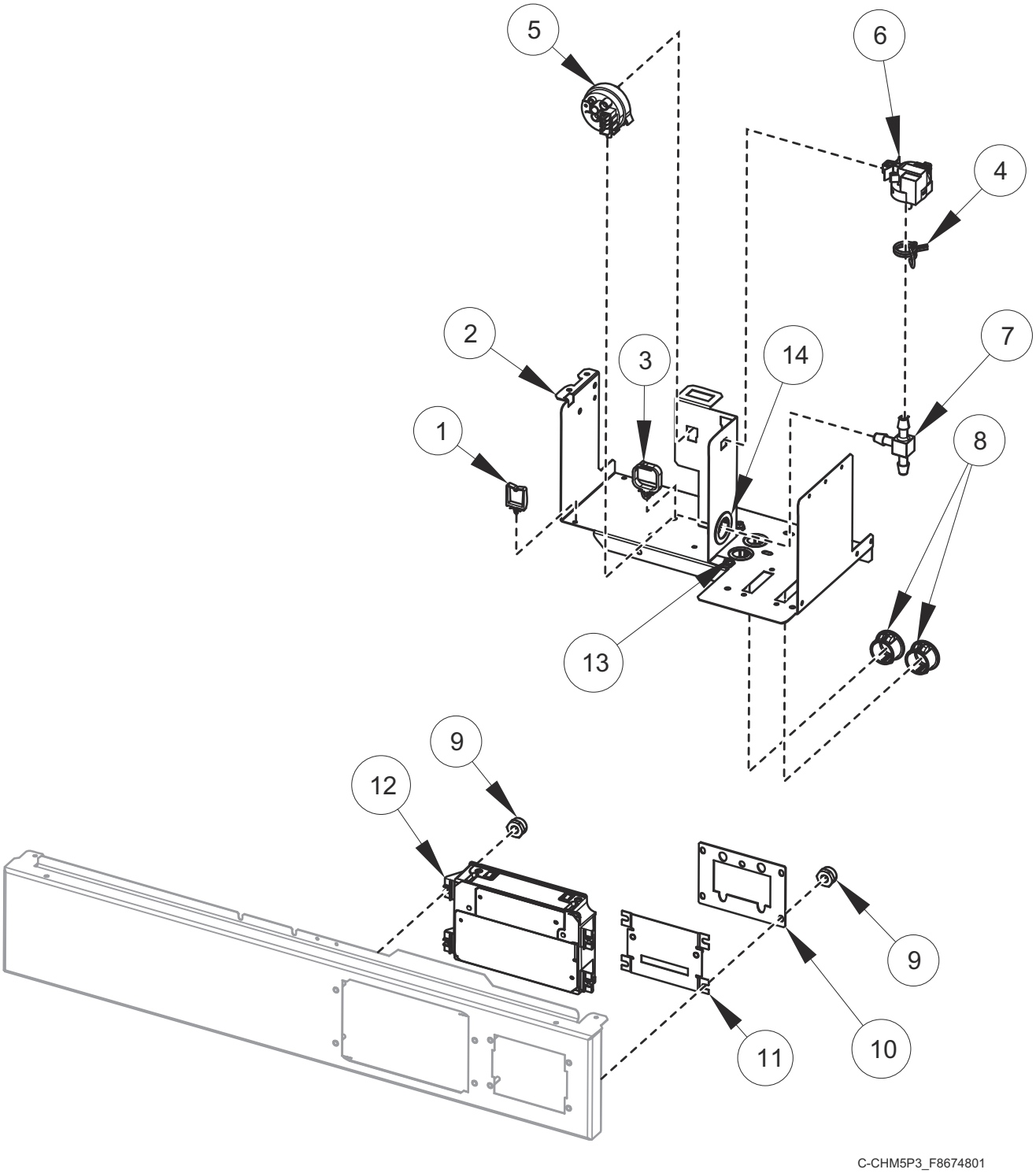

© Copyright, Alliance Laundry Systems LLC – DO NOT COPY or TRANSMIT

Control Module and Front Tray Assembly - Card Reader and Central Pay Models

REF	PART NO.	DESCRIPTION	COMMENTS
	44374701	App Pay Overlay Kit	
	203361P	Machine ID Control Assembly	
	F8673202	Central Pay Kit	Models without external supply board; Includes item 13, 204094 Central Pay Assembly, 202758 Transformer, hardware and harnesses
	F8673204	Central Pay Kit	Models with external supply board; Includes item 13, 204094 Central Pay Assembly, hardware and harnesses
	F8567309	Front Tray Assembly	Includes items 1-3, 6, 8, 13, 14, 70413301 Pushbutton Switch
	F8567312	Front Tray Assembly	Steam or electric heat; Includes items 1-8, 13, 14, and 70413301 Pushbutton Switch
	44342801	Central Pay Harness	Tray power harness
	F8519301	Harness	Tray power harness
	F8519502	Harness	Communication
	F8519702	Coin Vault Bypass Harness	
	F8519601	Harness	Coin access
	F8519403	Emergency Stop Bypass Harness	
	F8555406	Connector	8 pin; Use with 204094 Central Pay Assembly
	205070	Payment Center Kit	Central pay models
	205069	Payment Center Kit	Central pay models; Includes printer
1	70366201	Wire Clip	
2	F8531001	Front Tray Assembly	
3	F8449501	Wire Clip	
4	39282	Hose Clamp	
5	F8609101	Water Level Pressure Switch	Steam or electric heat
	F8405303	Tubing	Electric heat
6	F8623401	Pressure Sensor	
	F8405302	Tubing	Electric heat
7	203464	Barbed Tee	Steam or electric heat
8	M411826	Snap Bushing	
9	685846	Nut	
10	70208801	Mounting Plate	
11	F8201501	Card Plate Assembly	
12	F8493901P	Control Assembly	
13	F140938	Snap Bushing	
14	M402542	Snap Bushing	

© Copyright, Alliance Laundry Systems LLC – DO NOT COPY or TRANSMIT

Control Tray Assembly

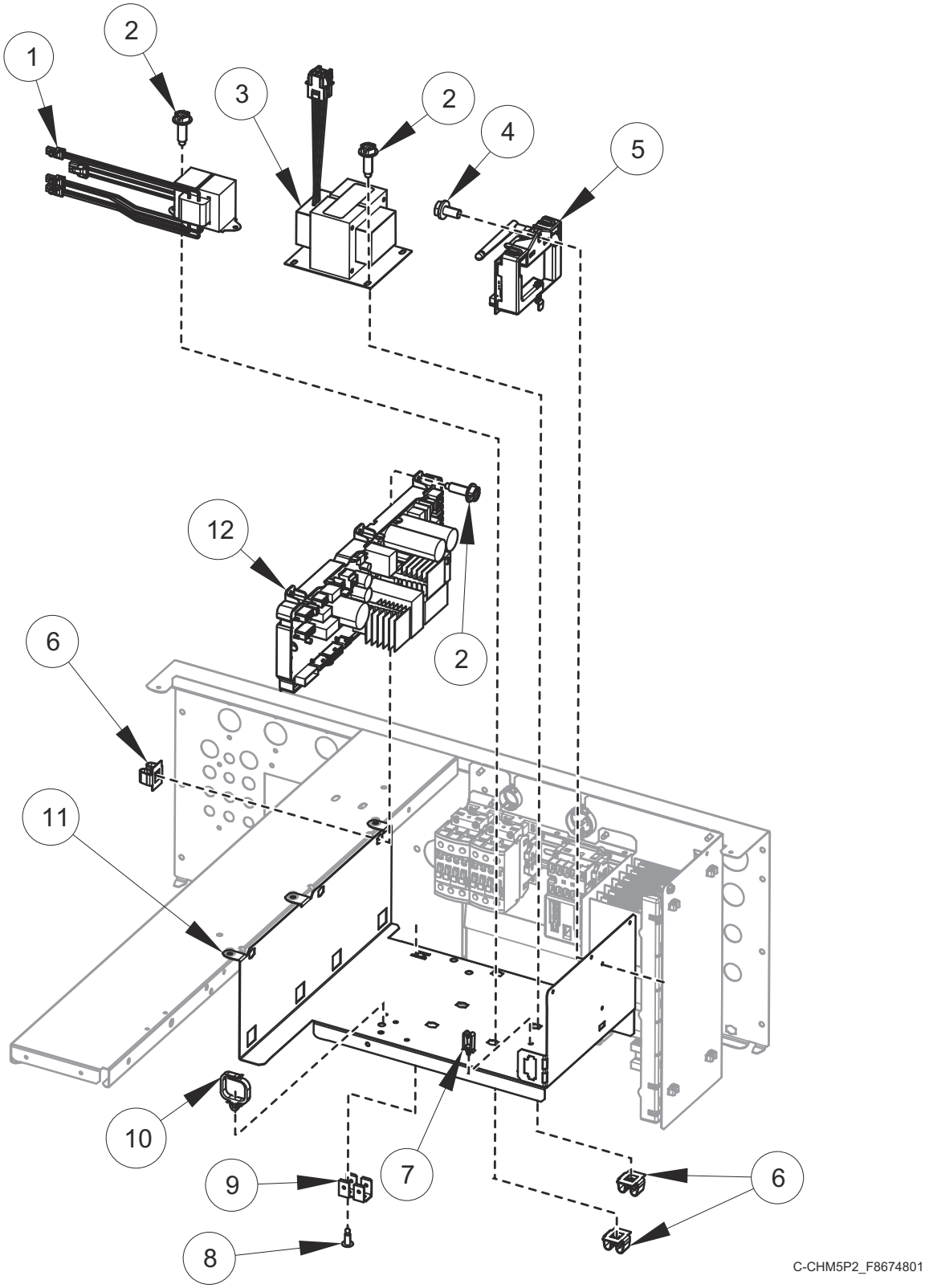

© Copyright, Alliance Laundry Systems LLC – DO NOT COPY or TRANSMIT

Control Tray Assembly

REF	PART NO.	DESCRIPTION	COMMENTS
	205223P	Gateway	
	205391P	Gateway	
	F8520404	Wireless Harness	Models through January 2019
	F8674004	Wireless Harness	Models starting February 2019
	F8662402	Wireless Kit	Models through January 2019; Includes items 4, 5, F8520404 Wireless Harness and labels
	F8676101	Wireless Kit	Models starting February 2019; Includes items 4, 5, F8674004 Wireless Harness and labels
1	202758	Transformer	External supply
2	F8206901	Screw	
3	F8491101	Transformer	N and P voltage
4	430497	Screw	
5	203532	Wireless Network Control Assembly	Models through January 2019
	807211	Wireless Network Control Assembly	Models starting February 2019
6	70030501	Expansion Clip	
7	70347601	Wire Clip	External supply
8	M400003	Pop Rivet	
9	00622SG	Terminal	
10	F8449501	Wire Clip	
11	F8530701	Control Tray	
12	F8494101P	Input and Output Control Assembly	

© Copyright, Alliance Laundry Systems LLC – DO NOT COPY or TRANSMIT

Flush Mount Coin Meter Assembly - Single Drop

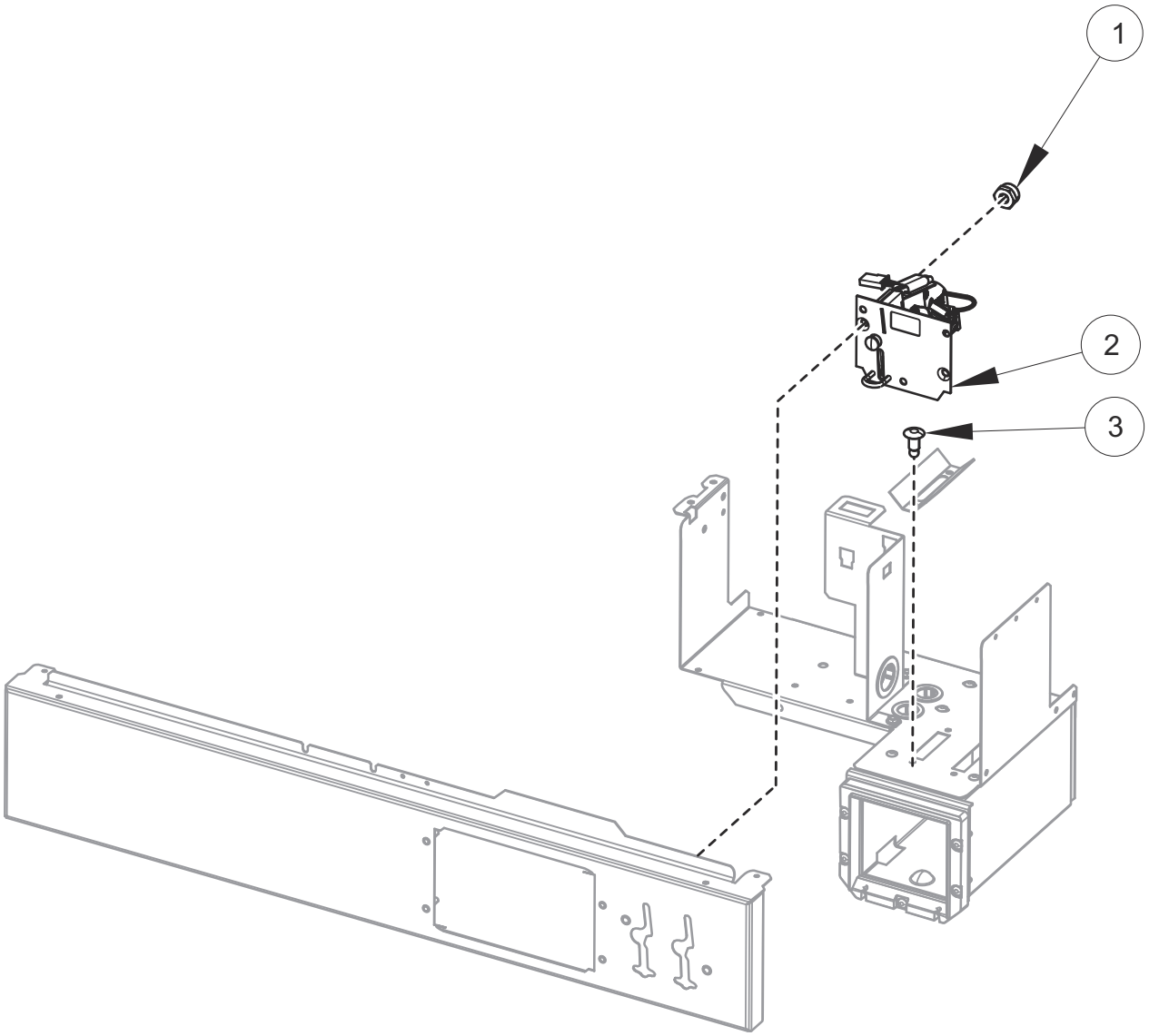

C-CHM6P7_F8674801

© Copyright, Alliance Laundry Systems LLC – DO NOT COPY or TRANSMIT

Flush Mount Coin Meter Assembly - Single Drop

REF	PART NO.	DESCRIPTION	COMMENTS
	44374701	App Pay Overlay Kit	
	38725	Coin Identification Paper	
	200674P	Opto Coupler	
1	685846	Nut	
2	70441601P	Coin Drop	U.S.A.; $.25
	38475	Coin Drop Assembly	Japan; 100 yen
	38464P	Coin Drop Assembly	Canada; .25
	CK077	Coin Drop Kit	Taiwan; 10 NT
	70506901	Coin Drop Assembly	Singapore; $1.00 NEW
	38462P	Coin Drop Assembly	Token; STD 118-1
	38463	Coin Drop Assembly	Token; STD 118-5
	38963P	Coin Drop	Token STD 118-16
	CK097	Coin Drop	Jeton 08MS
	201141	Coin Drop Assembly	Token; Jeton wh121
	70471601	Coin Drop Assembly	Token; 7K
3	70058501	Pop Rivet	

© Copyright, Alliance Laundry Systems LLC – DO NOT COPY or TRANSMIT

Flush Mount Coin Meter Assembly - Dual Drop

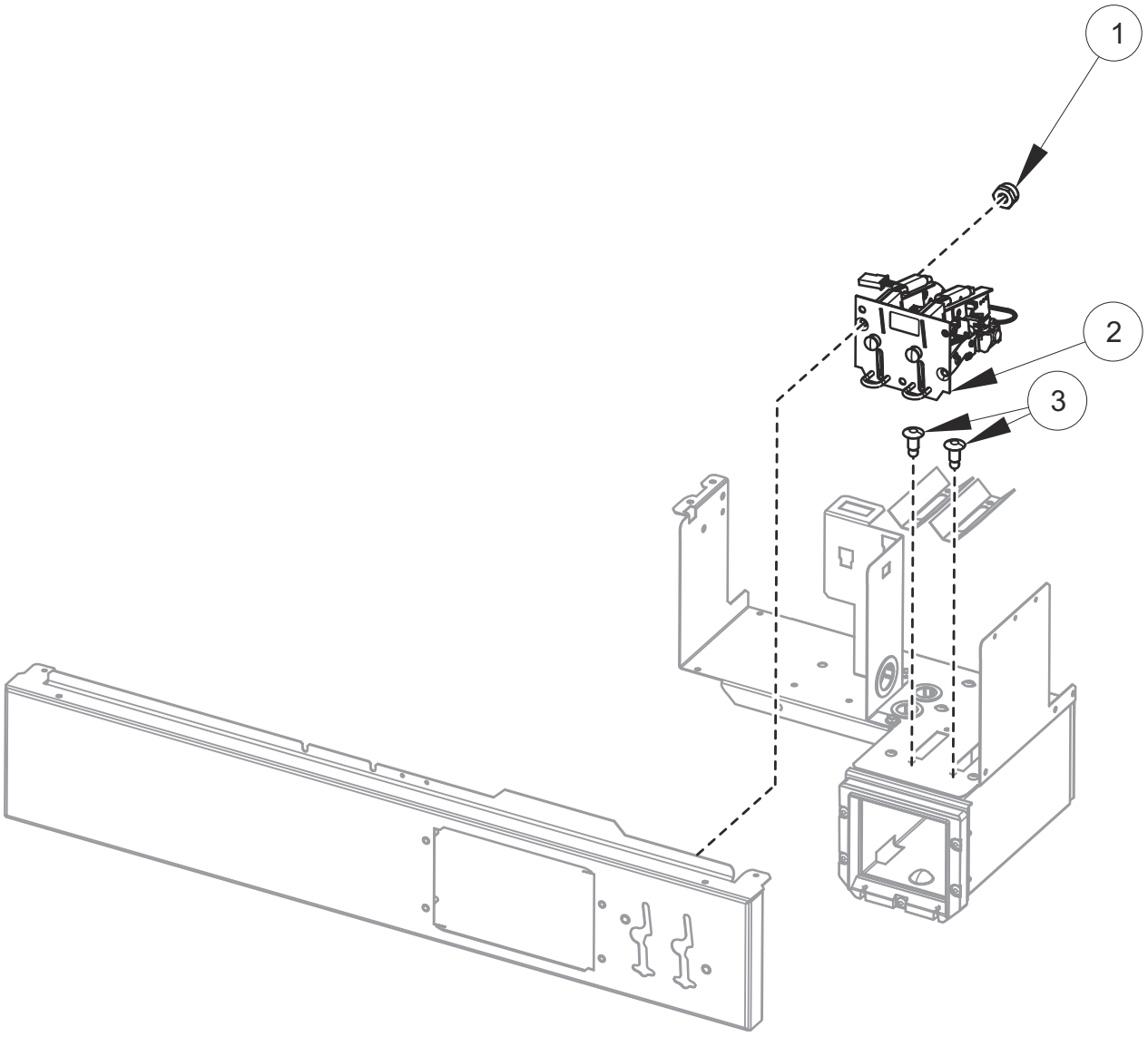

C-CHM6P8_F8674801

© Copyright, Alliance Laundry Systems LLC – DO NOT COPY or TRANSMIT

Flush Mount Coin Meter Assembly - Dual Drop

REF	PART NO.	DESCRIPTION	COMMENTS
	44374701	App Pay Overlay Kit	
	38725	Coin Identification Paper	
	200674P	Opto Coupler	
1	685846	Nut	
2	70441603	Coin Drop	U.S.A.; $.25 and $1.00
	38519	Coin Drop Assembly	Japan; 100 yen and 500 yen
	70441602	Coin Drop Assembly	Canada; .25 and $1.00
	38467	Coin Drop Assembly	Australia; $0.20 and $1.00
	70447301	Coin Drop Assembly	Australia; $1.00 and $2.00
	70283102	Coin Drop Assembly	0.20 and 0.50 Euro
	210195	Coin Drop Assembly	0.20 and 1.00 Euro
	210196	Coin Drop Assembly	0.50 and 1.00 Euro
	F0160737-00	Coin Meter	0.50 and 2.00 Euro
	70281102	Coin Drop Assembly	Taiwan; 10 and 50 NT
	70482401	Coin Drop Assembly	New Zealand; $1.00 and $2.00
	CK503	Coin Drop Kit	U.S.A. and Canada; $.25 and $1.00
3	70058501	Pop Rivet	

© Copyright, Alliance Laundry Systems LLC – DO NOT COPY or TRANSMIT

Electronic Coin Meter Assembly

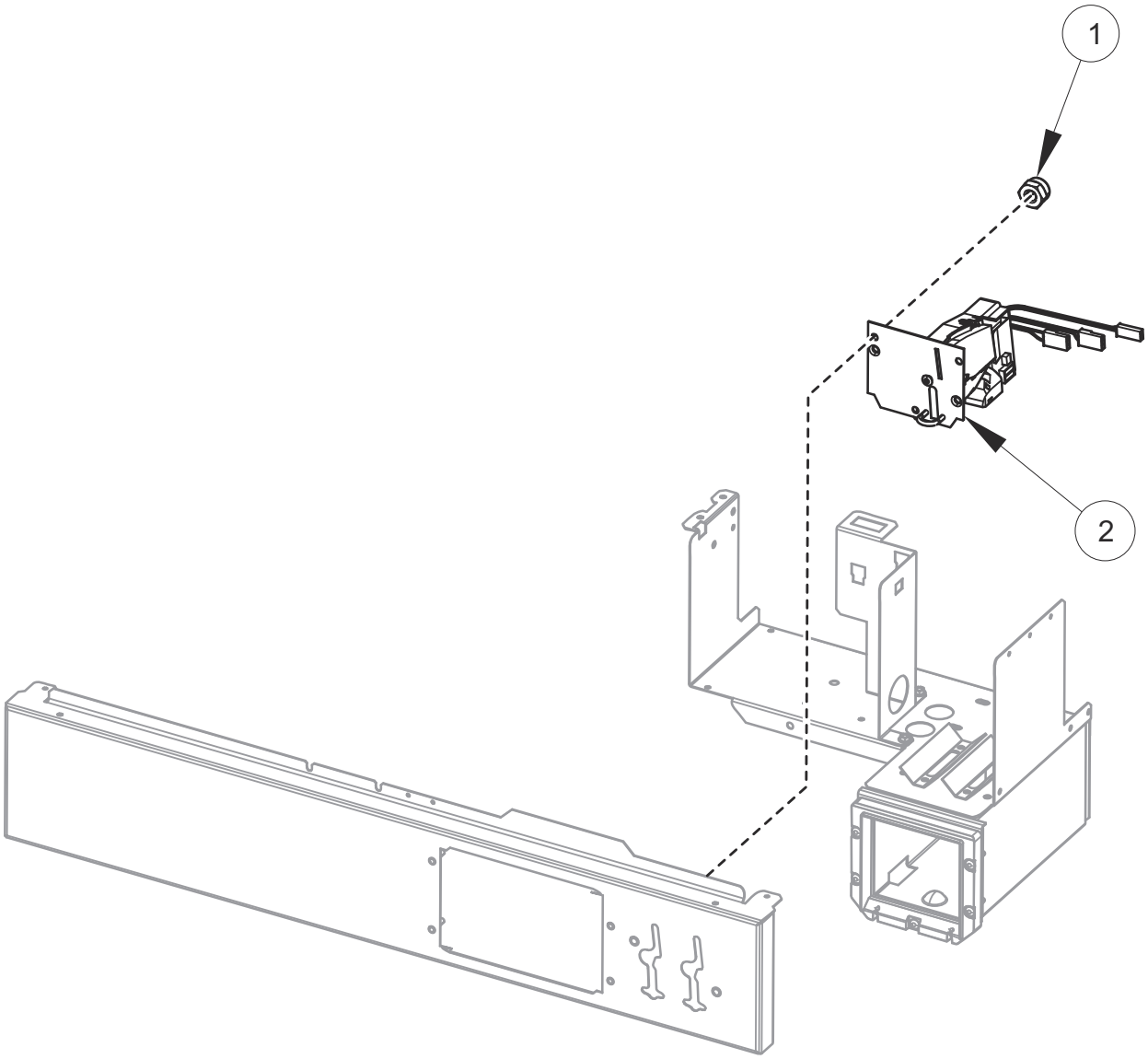

C-CHM6P6_F8674801

© Copyright, Alliance Laundry Systems LLC – DO NOT COPY or TRANSMIT

Electronic Coin Meter Assembly

REF	PART NO.	DESCRIPTION	COMMENTS
	44374701	App Pay Overlay Kit	
	38725	Coin Identification Paper	
	CK500	Electronic Coin Drop Kit	For use when installing Electronic Coin Drop Kits
	F8034701P	Pulse Expander Assembly	
1	F430215	Nut	
2	CK100	Electronic Coin Drop Assembly	Euro and Great Britain coins
	70513310	Electronic Coin Drop Assembly	Japan and Thailand coins
	70513304	Electronic Coin Drop Assembly	Australia, New Zealand, Hong Kong and South Korea coins
	70513303	Electronic Coin Drop Assembly	Denmark, Norway and Euro coins
	70513306	Electronic Coin Drop Assembly	Mexico, Ecuador and U.S.A. coins
	70294107	Electronic Coin Drop Assembly	Lithuania, Latvia and Euro coins
	70513311	Electronic Coin Drop Assembly	Chiand Malaysia coins
	70513308	Electronic Coin Drop Assembly	South African 1 and 5 rand coins
	70513309	Electronic Coin Drop Assembly	Euro coins
	70513312	Electronic Coin Drop Assembly	Russia coins
	70513313	Electronic Coin Drop Assembly	Philippines coins
	70513314	Electronic Coin Drop Assembly	Thailand coins
	70513315	Electronic Coin Drop Assembly	Chile coins
	70513316	Electronic Coin Drop Assembly	Singapore coins
	CK115	Electronic Coin Drop Kit	United States and Canada; Includes 38725 Coin Identification Paper
	CK099	Electronic Coin Drop Kit	Australia (default), New Zealand, Hong Kong, South Korea and Malaysia; Includes 38725 Coin Identification Paper
	CK100	Electronic Coin Drop Kit	United Kingdom (default) and Europe; Includes 38725 Coin Identification Paper
	CK101	Electronic Coin Drop Kit	Europe (default), Denmark and Norway; Includes 38725 Coin Identification Paper
	CK108	Electronic Coin Drop Kit	South Africa; Includes 38725 Coin Identification Paper
	CK109	Electronic Coin Drop Kit	Euro; Includes 38725 Coin Identification Paper
	CK110	Electronic Coin Drop Kit	Mexico (default), Ecuador and United States; Includes 38725 Coin Identification Paper
	CK113	Electronic Coin Drop Kit	Japan and Taiwan; Includes 38725 Coin Identification Paper
	CK116	Electronic Coin Drop Kit	Malaysia (default) and China; Includes 38725 Coin Identification Paper
	CK117	Electronic Coin Drop Kit	Russia; Includes 38725 Coin Identification Paper
	CK118	Electronic Coin Drop Kit	Philippine; Includes 38725 Coin Identification Paper
	CK119	Electronic Coin Drop Kit	Thailand; Includes 38725 Coin Identification Paper
	CK120	Electronic Coin Drop Kit	Chile; Includes 38725 Coin Identification Paper
	CK121	Electronic Coin Drop Kit	Singapore; Includes 38725 Coin Identification Paper
	CK122	Coin Drop Kit	New Zealand; 1.00 and 2.00; Includes 38725 Coin Identification Paper

© Copyright, Alliance Laundry Systems LLC – DO NOT COPY or TRANSMIT

Optional Coin Box

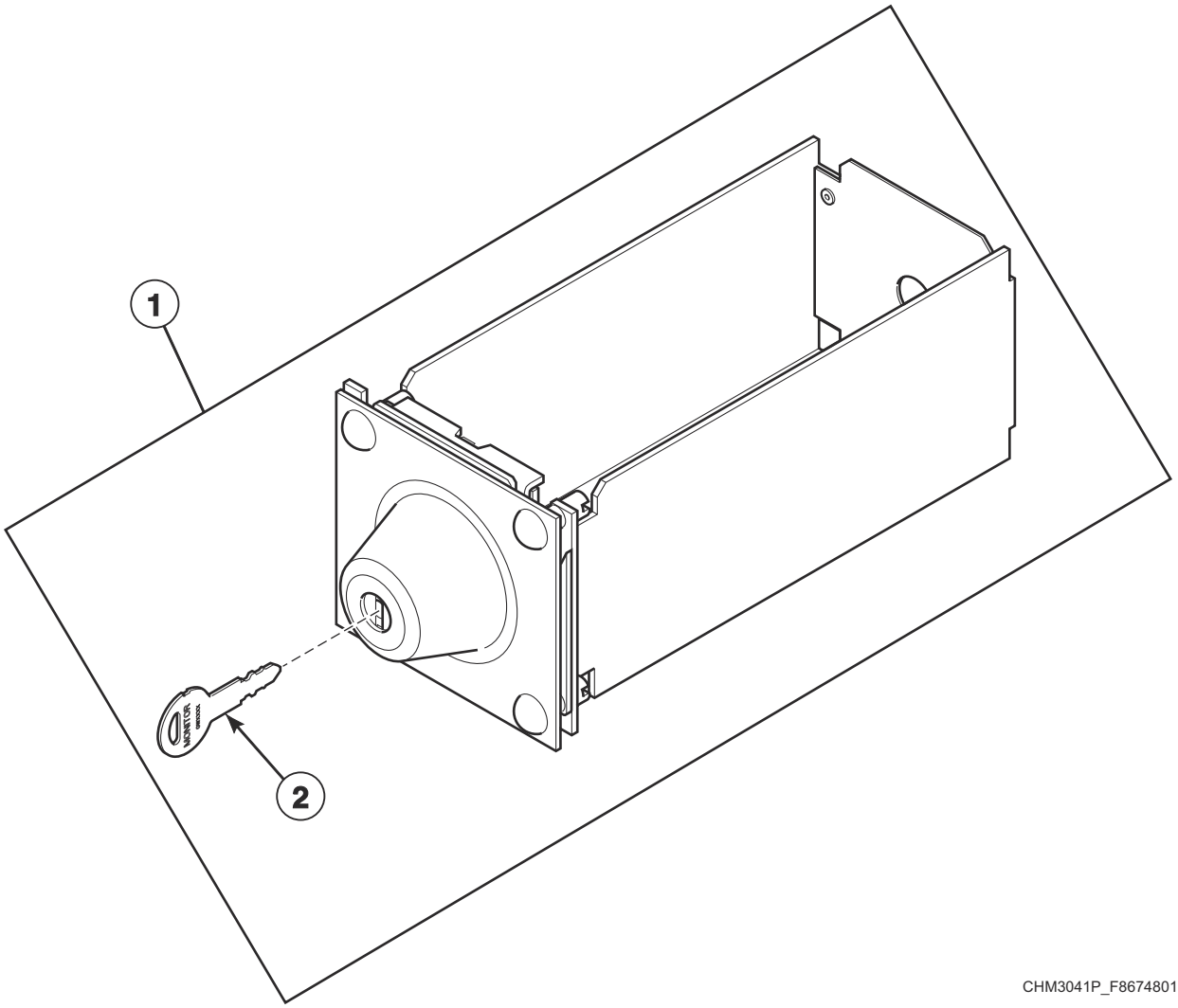

© Copyright, Alliance Laundry Systems LLC – DO NOT COPY or TRANSMIT

Optional Coin Box

REF	PART NO.	DESCRIPTION	COMMENTS
1	F8182001	Coin Drawer Assembly	
2	F160420	Key	GW0023

© Copyright, Alliance Laundry Systems LLC – DO NOT COPY or TRANSMIT

Inverter Drive Box - Q and X Voltage

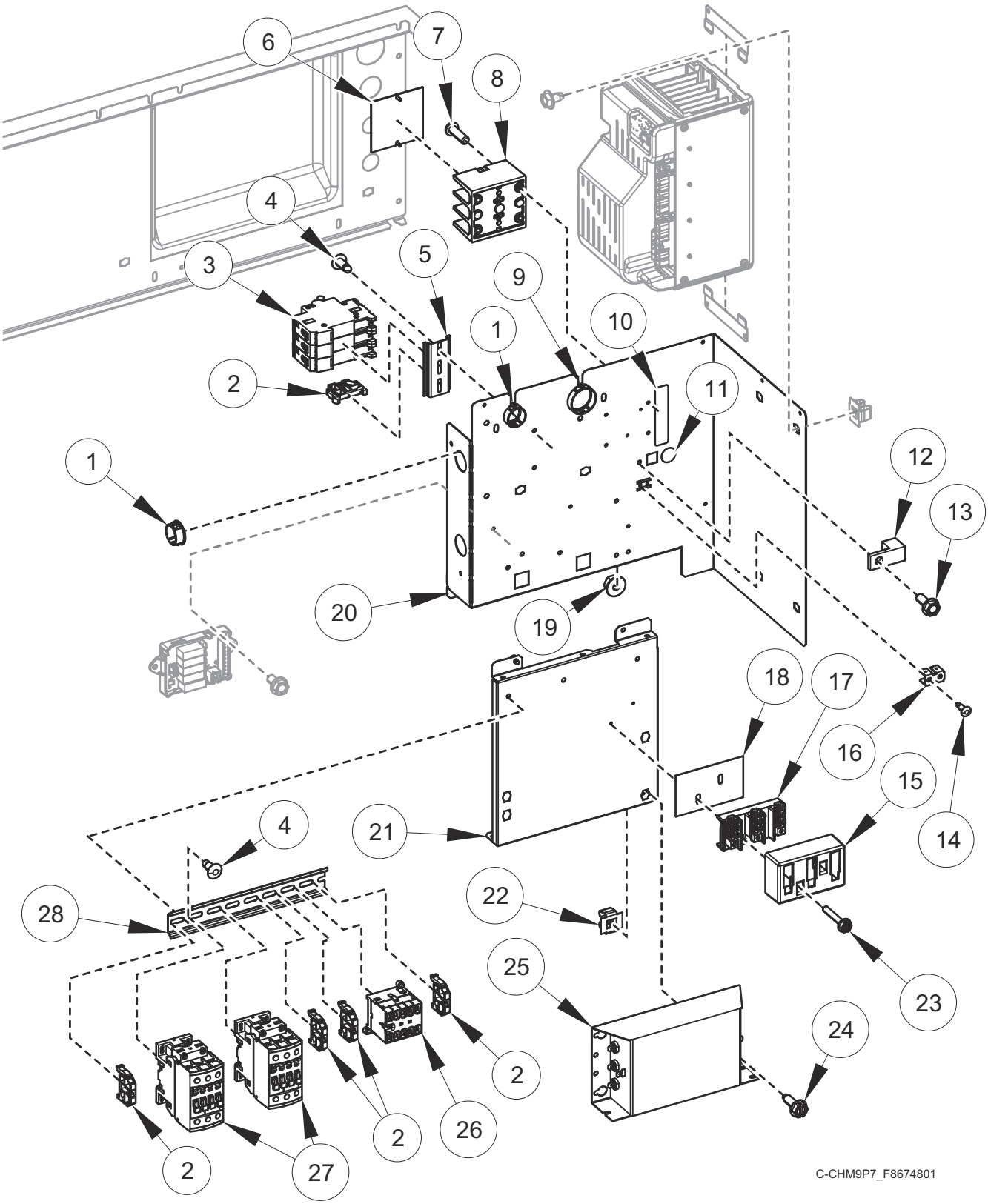

© Copyright, Alliance Laundry Systems LLC – DO NOT COPY or TRANSMIT

Inverter Drive Box - Q and X Voltage

REF	PART NO.	DESCRIPTION	COMMENTS
	F8567003	Drive Panel Base Assembly	Includes items 4, 11, 12, 16, 23, 24 and 29
	F8567004	Drive Panel Base Assembly	Electric heat; Includes items 4, 5, 11, 12, 16, 23, 24 and 29
	F8583501	Jumper	Circuit breaker jumper; Electric heat
	F8518401	Harness	Power TB1; X voltage
	F8518403	Harness	Power CB; Q voltage; Electric heat
	F8518404	Harness	Power filter
	F8518606	Harness	Power drive
	F8528001	Harness	TB filter
	F8528003	Harness	CB filter; Electric heat
	F8528005	Harness	TB2 filter
	F8619101	Power Harness	Power contactor; Electric heat
	F8619102	Harness	Power contactor; Electric heat; IEC
	F8662813	Filter Kit	Includes items 1, 15, 17, 18, 22-25, harness and labels; Q voltage; Electric heat
	F8662808	Filter Kit	Includes items 1, 15, 17, 18, 22-25, harness and labels; X voltage
1	F140938	Snap Bushing	
2	F8449801	End Stop	
3	70488101	Circuit Breaker	3P; 25A; Electric heat
4	70058501	Pop Rivet	
5	B12315401	DIN Rail	7.5 mm x 35 mm x 72 mm; Electric heat
6	44014901P	Power Distribution Block Cover	Electric heat
7	39733	Screw	Electric heat
8	M413865	Power Distribution Block	Electric heat
9	70346501	Bushing	
10	44286803	Label	Power input; L1, L2, L3
	44286804	Wire Label	Power input; L1, L2/N; L1, L2, L3; X voltage
11	D516100	Label	
12	M411283	Ground Lug Connector	
13	685837	Screw	
14	M400003	Pop Rivet	
15	70333001	Terminal Block Shield	
16	00622SG	Terminal	
17	430642	Terminal Block	
18	M413862	Insulator	
19	44088001	Nut	
20	F8530803	Drive Terminal Tray	
21	F8530901	Contactor Tray	
22	70030501	Expansion Clip	
23	51783	Screw	
24	F8206901	Screw	
25	F8591801	EMI Filter	200/240 Volt; 1/3 Phase; 20 Amp
	F8637501	EMI Filter	380/480 Volt; 3 Phase; 12 Amp
26	70482601	Contactor	5.5kW/500V; 24VDC
27	70482701	Contactor	50A; 24VDC
28	M412689	DIN Rail	7.5 mm x 35 mm x 8.364 inch

© Copyright, Alliance Laundry Systems LLC – DO NOT COPY or TRANSMIT

Inverter Drive Box - N and P Voltage

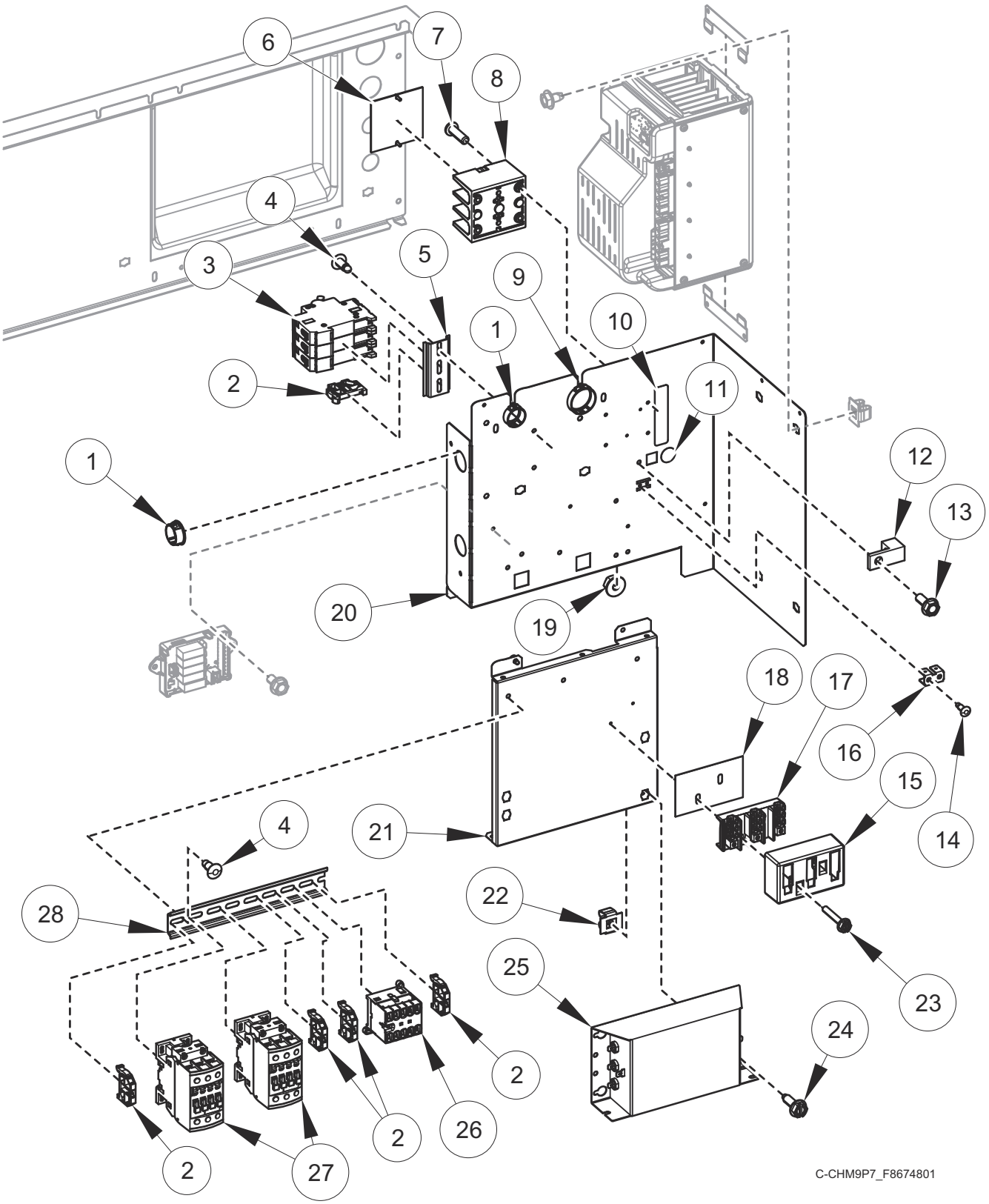

© Copyright, Alliance Laundry Systems LLC – DO NOT COPY or TRANSMIT

Inverter Drive Box - N and P Voltage

REF	PART NO.	DESCRIPTION	COMMENTS
	F8567003	Drive Panel Base Assembly	Includes items 4, 11, 12, 16, 23, 24 and 29
	F8567004	Drive Panel Base Assembly	Electric heat; Includes items 4, 5, 11, 12, 16, 23, 24 and 29
	F8583501	Jumper	Circuit breaker jumper; Electric heat
	F8518501	Harness	
	F8518403	Harness	Electric heat
	F8518503	Harness	Electric heat
	F8518504	Harness	Power filter
	F8518606	Harness	Power drive
	F8528001	Harness	TB filter
	F8528003	Harness	CB filter; Electric heat
	F8528005	Harness	TB2 filter
	F8619101	Power Harness	Power contactor; Electric heat
	F8619102	Harness	Power contactor; Electric heat
	F8662814	Filter Kit	Includes items 1, 15, 17, 18, 22-25, harness and labels; Electric heat
	F8662807	Filter Kit	Includes items 1, 15, 17, 18, 22-25, harness and labels
1	F140938	Snap Bushing	
2	F8449801	End Stop	
3	70488101	Circuit Breaker	3P; 25A; Electric heat
4	70058501	Pop Rivet	
5	B12315401	DIN Rail	7.5 mm x 35 mm x 72 mm; Electric heat
6	44014901P	Power Distribution Block Cover	Electric heat
7	39733	Screw	Electric heat
8	M413865	Power Distribution Block	Electric heat
9	70346501	Bushing	
10	44286803	Label	Power input; L1, L2, L3
11	D516100	Label	
12	M411283	Ground Lug Connector	
13	685837	Screw	
14	M400003	Pop Rivet	
15	70333001	Terminal Block Shield	
16	00622SG	Terminal	
17	430642	Terminal Block	
18	M413862	Insulator	
19	44088001	Nut	
20	F8530803	Drive Terminal Tray	
21	F8530901	Contactor Tray	
22	70030501	Expansion Clip	
23	51783	Screw	
24	F8206901	Screw	
25	F8591801	EMI Filter	200/240 Volt; 1/3 Phase; 20 Amp
	F8637501	EMI Filter	380/480 Volt; 3 Phase; 12 Amp
26	70482601	Contactor	5.5kW/500V; 24VDC
27	70482701	Contactor	50A; 24VDC
28	M412689	DIN Rail	7.5 mm x 35 mm x 8.364 inch

© Copyright, Alliance Laundry Systems LLC – DO NOT COPY or TRANSMIT

External Supply Kit

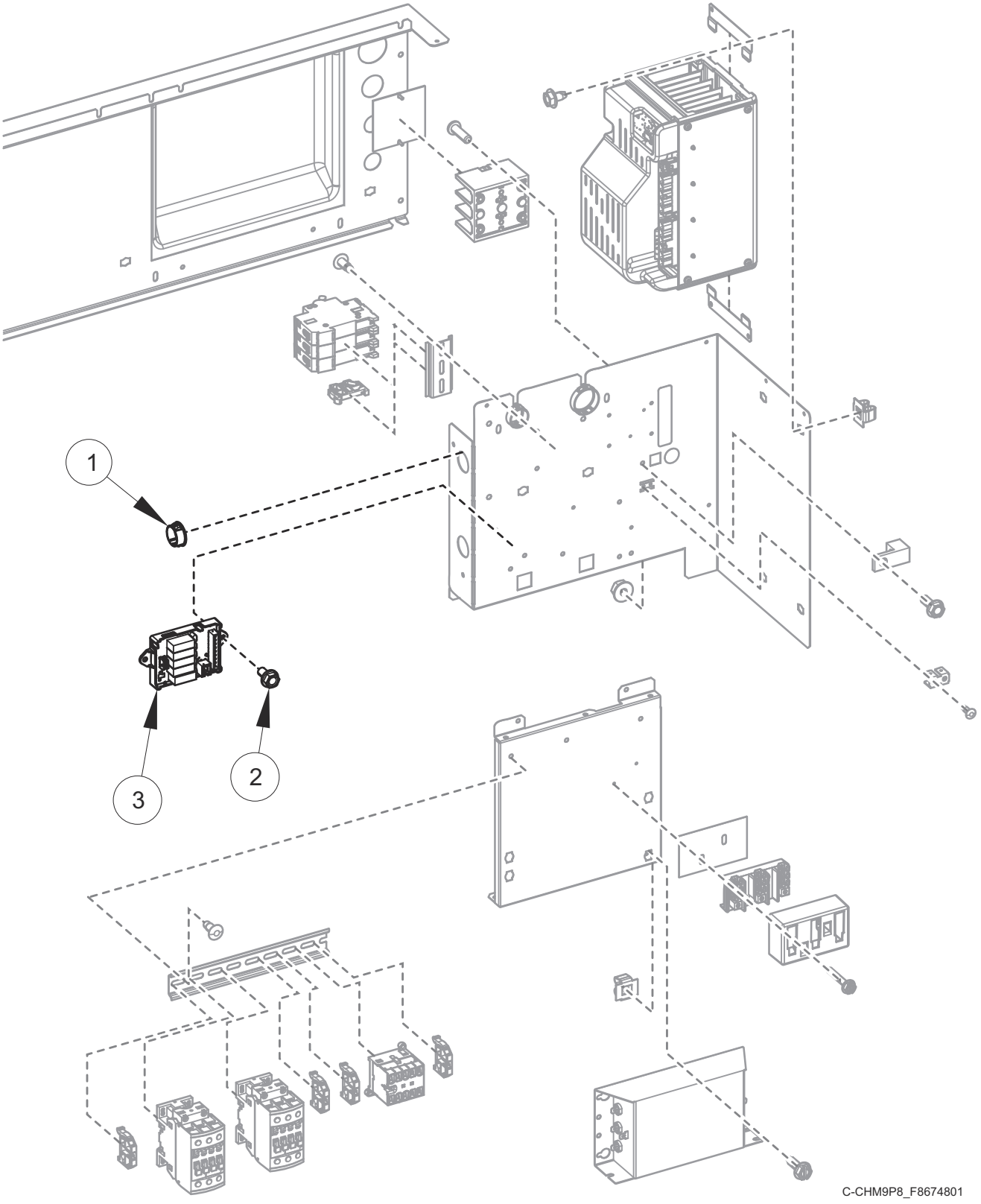

© Copyright, Alliance Laundry Systems LLC – DO NOT COPY or TRANSMIT

External Supply Kit

REF	PART NO.	DESCRIPTION	COMMENTS
	F8662508	External Supply Kit	Coin and central pay models; Includes items 1-3, 202758 Transformer, F8520602 Harness, F8528204 Harness, hardware and labels; 4 out
	F8662504	External Supply Kit	Card ready models; Includes items 1-3, F8520602 Harness, F8528204 Harness and labels; 4 out
	F8520602	Harness	Communication
	F8528204	Harness	Power
1	F140938	Snap Bushing	
2	430497	Screw	
3	804528	Chemical Injection Control	5 output
	70493102	Connector	9 pin; H2

© Copyright, Alliance Laundry Systems LLC – DO NOT COPY or TRANSMIT

Inverter Drive

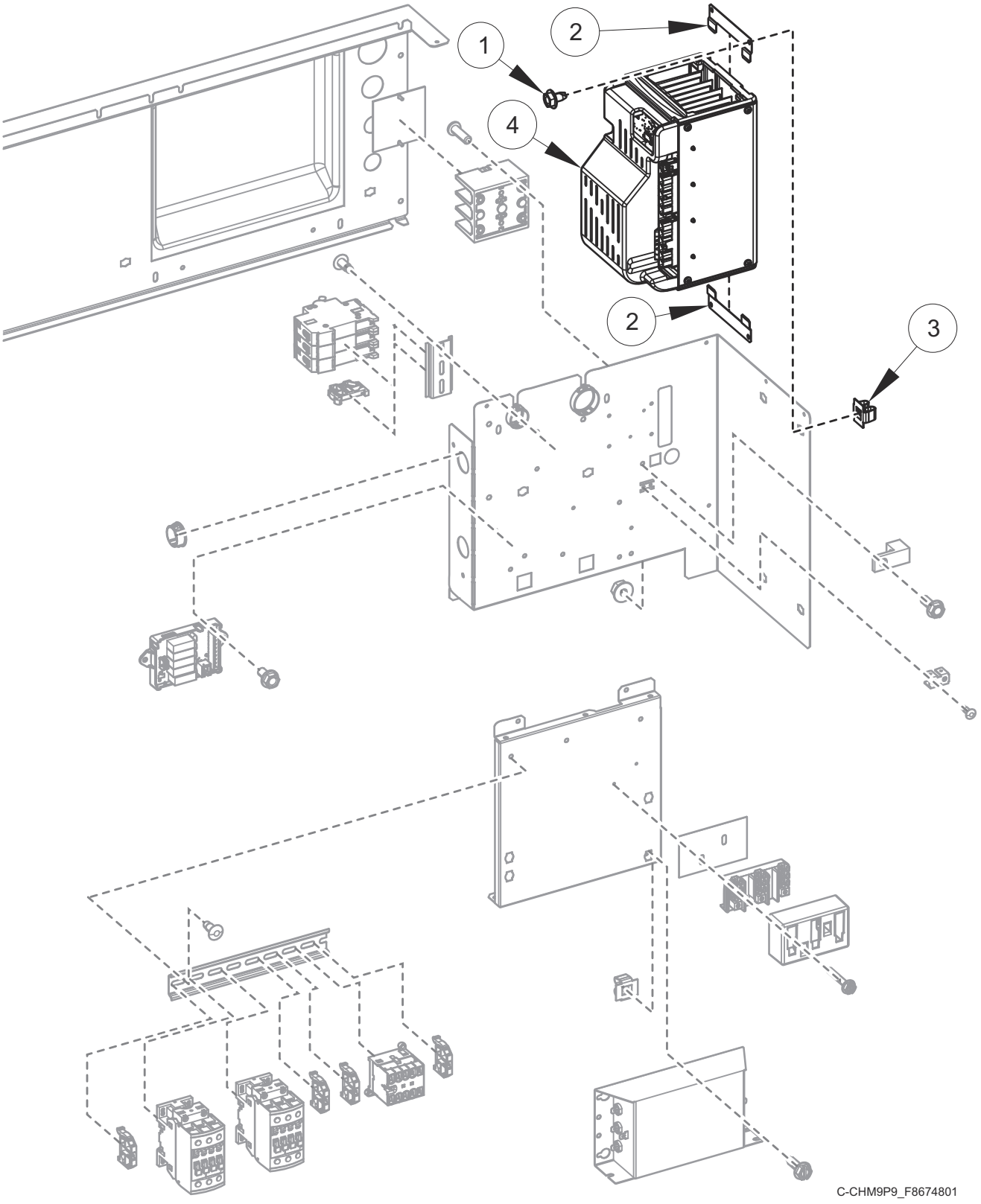

© Copyright, Alliance Laundry Systems LLC – DO NOT COPY or TRANSMIT

Inverter Drive

REF	PART NO.	DESCRIPTION	COMMENTS
	F8519202	Drive Communication Harness	Electric heat; N and P voltage
	F8519203	Drive Communication Harness	Electric heat; Q voltage
	F8519201	Drive Communication Harness	Standard
	F8519204	Drive Communication Harness	Steam heat
	F8518603	Drive Power Harness	2/3/5 hp; 480 Volt
1	D503688	Screw	
2	F8322401	Drive Mounting Bracket	
3	70030501	Expansion Clip	
4	F8496601	Drive Assembly	Q and X voltage; 5 hp; 240 Volt
	F8496901	Drive Assembly	N and P voltage; 5 hp; 480 Volt

© Copyright, Alliance Laundry Systems LLC – DO NOT COPY or TRANSMIT

Front Panels and Control Panel - Coin Models - Design 4

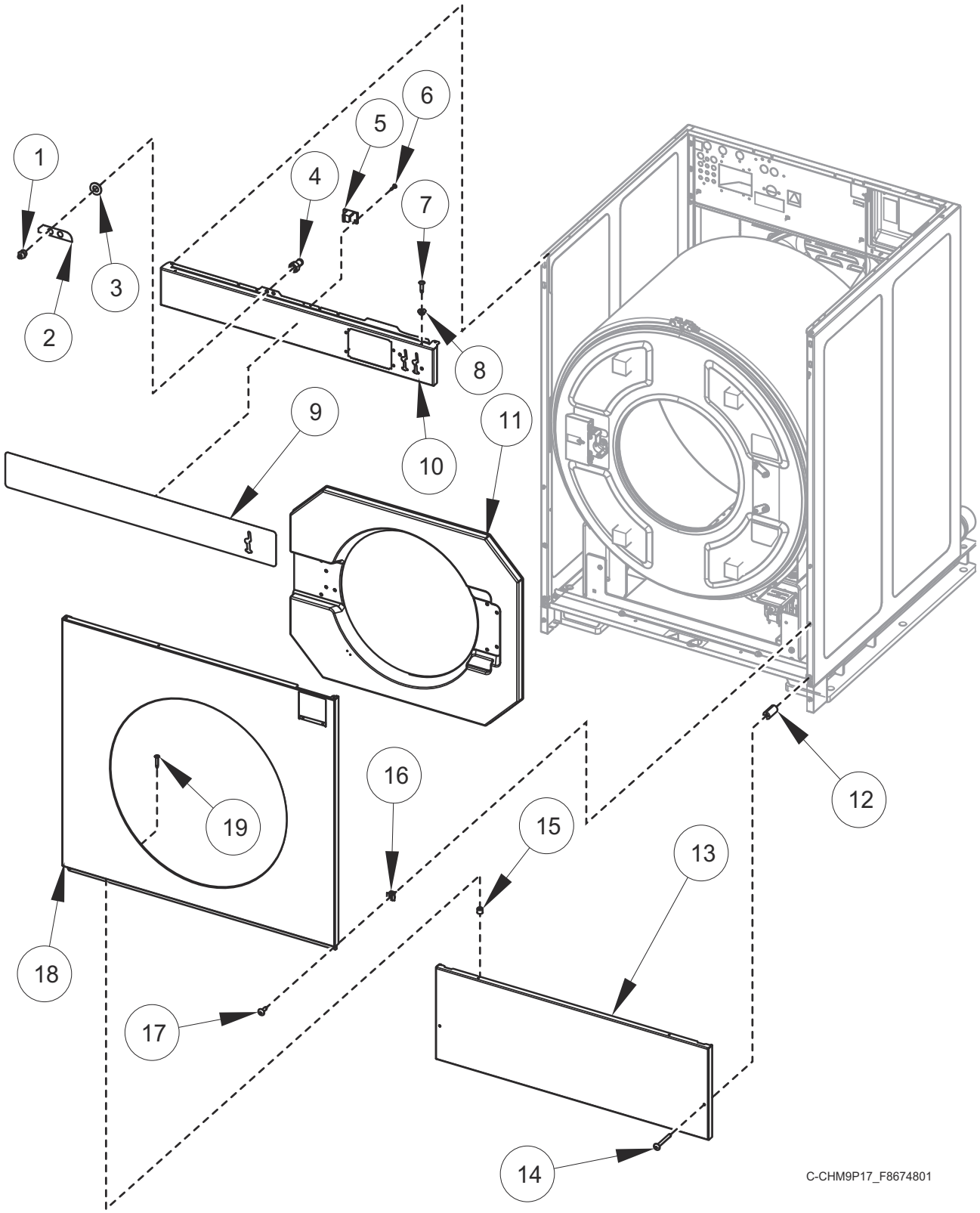

© Copyright, Alliance Laundry Systems LLC – DO NOT COPY or TRANSMIT

Front Panels and Control Panel - Coin Models - Design 4

REF	PART NO.	DESCRIPTION	COMMENTS
1	F190701	Grease Fitting	
2	F8613501	Label	Grease instruction notice
3	70292801	Washer	
4	F422114	Air Coupling	
	F8245713	Hose	
5	F8201001	Top Cover Latch	
6	F431215	Pop Rivet	
7	70412601	Pop Rivet	
8	F8201101	Washer	
9	F8641601	Overlay	Single coin; Gray
	F8641602	Overlay	Dual coin; Gray
	F8641605	Overlay	World drop; Gray
	F8594301	Overlay	80 pound models; Single coin; Citron
	F8594302	Overlay	80 pound models; Dual coin; Citron
	F8594901	Overlay	80 pound models; Single coin; Cityscape
	F8594902	Overlay	80 pound models; Dual coin; Cityscape
	F8594401	Overlay	100 pound models; Single coin; Citron
	F8594402	Overlay	100 pound models; Dual coin; Citron
	F8595001	Overlay	100 pound models; Single coin; Cityscape
	F8595002	Overlay	100 pound models; Dual coin; Cityscape
	70556801	Overlay	Secondary world drop; Right drop; Gray
	70556601	Overlay	Secondary world drop; Left drop; Gray
10	F8552601	Control Panel Assembly	
11	F170419-3	Door Bezel	
12	F8609701	Access Panel Retaining Spacer	
13	F8552702	Access Panel	
14	F8589501	Screw	
15	56079	Panel Locator	
16	70030501	Expansion Clip	
17	F8117601	Screw	
18	F8552801	Front Panel	
19	M412763	Rivet	

© Copyright, Alliance Laundry Systems LLC – DO NOT COPY or TRANSMIT

Front Panels and Control Panel - Coin Models - Design 6

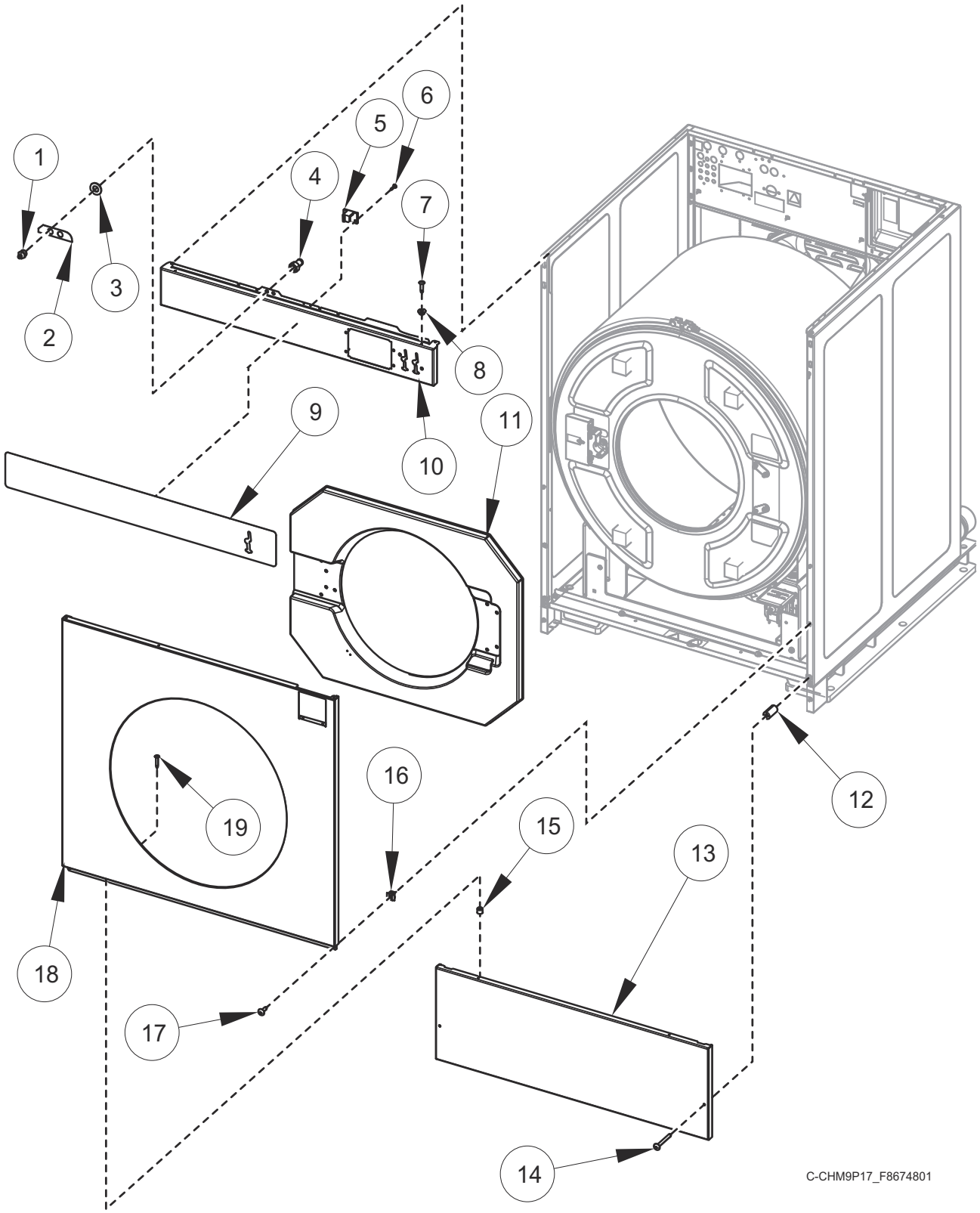

© Copyright, Alliance Laundry Systems LLC – DO NOT COPY or TRANSMIT

Front Panels and Control Panel - Coin Models - Design 6

REF	PART NO.	DESCRIPTION	COMMENTS
1	F190701	Grease Fitting	
2	F8613501	Label	Grease instruction notice
3	70292801	Washer	
4	F422114	Air Coupling	
	F8245713	Hose	
5	F8201001	Top Cover Latch	
6	F431215	Pop Rivet	
7	70412601	Pop Rivet	
8	F8201101	Washer	
9	F8692601	Overlay	Single coin
	F8692602	Overlay	Dual coin
	F8693101	Overlay	Single coin; Cityscape
	F8693102	Overlay	Dual coin; Cityscape
	F8693601	Overlay	Single coin; Citron
	F8693602	Overlay	Dual coin; Citron
	F8694101	Overlay	Single coin; International
	F8694102	Overlay	Dual coin; International
	F8694105	Overlay	World drop; International
	70645601	Overlay	Secondary single drop; Gray
	70645901	Overlay	Secondary world drop; Gray
	70645701	Overlay	Secondary single drop; Green
	70645801	Overlay	Secondary world drop; Green
10	F8697501	Control Panel Assembly	Coin
11	F170419-3	Door Bezel	
12	F8609701	Access Panel Retaining Spacer	
13	F8552702	Access Panel	
14	F8589501	Screw	
15	56079	Panel Locator	
16	70030501	Expansion Clip	
17	F8117601	Screw	
18	F8685901	Front Panel	Coin
19	M412763	Rivet	

© Copyright, Alliance Laundry Systems LLC – DO NOT COPY or TRANSMIT

Front Panels and Control Panel - Coin Models - Design 7

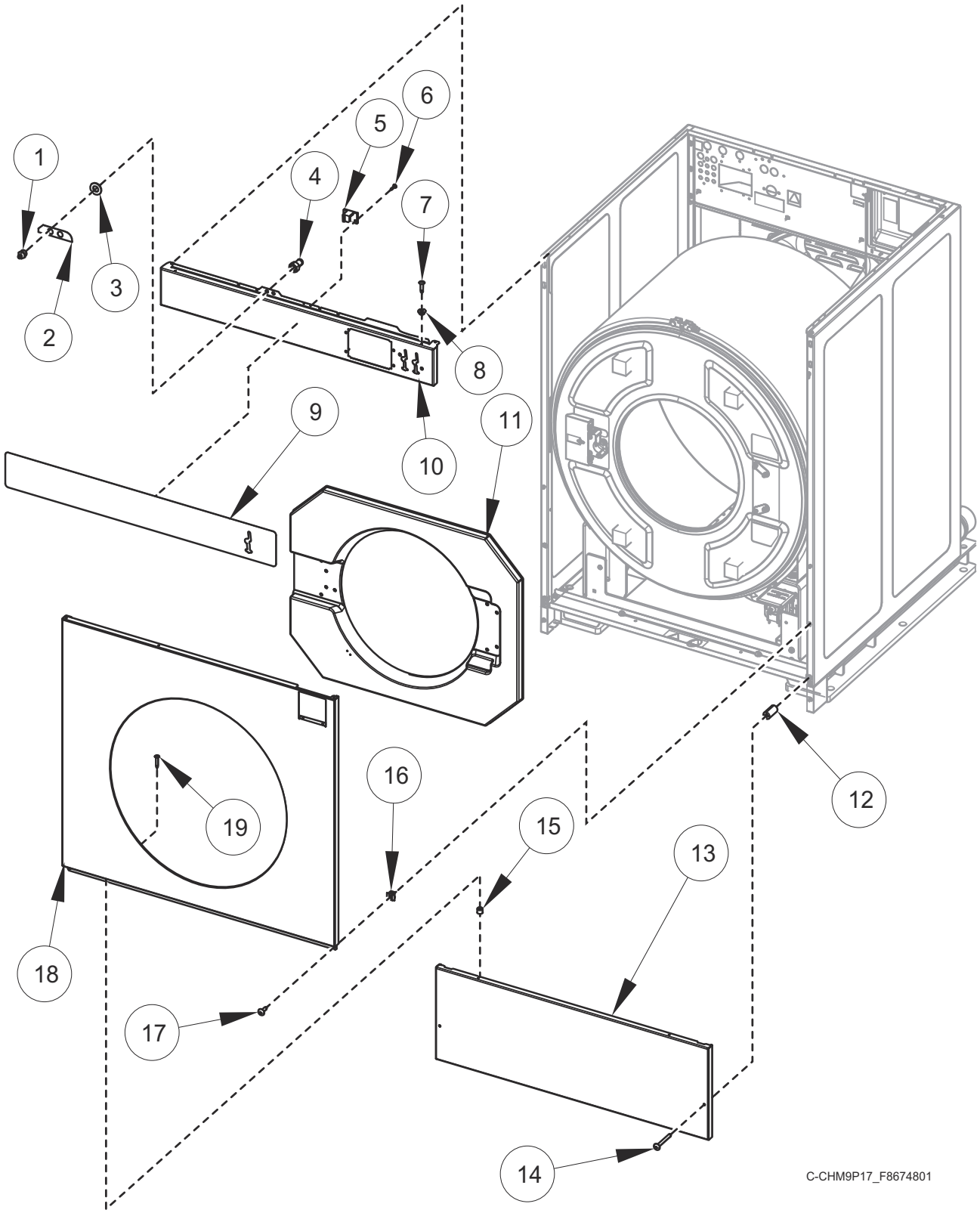

© Copyright, Alliance Laundry Systems LLC – DO NOT COPY or TRANSMIT

Front Panels and Control Panel - Coin Models - Design 7

REF	PART NO.	DESCRIPTION	COMMENTS
1	F190701	Grease Fitting	
2	F8613501	Label	Grease instruction notice
3	70292801	Washer	
4	F422114	Air Coupling	
	F8245713	Hose	
5	F8201001	Top Cover Latch	
6	F431215	Pop Rivet	
7	70412601	Pop Rivet	
8	F8201101	Washer	
9	F8591401	Overlay	80 pound models; Single coin
	F8591501	Overlay	100 pound models; Single coin
	F8591402	Overlay	80 pound models; Dual coin
	F8591502	Overlay	100 pound models; Dual coin
	F8594301	Overlay	80 pound models; Single coin; Citron
	F8594401	Overlay	100 pound models; Single coin; Citron
	F8594302	Overlay	80 pound models; Dual coin; Citron
	F8594402	Overlay	100 pound models; Dual coin; Citron
	F8594901	Overlay	80 pound models; Single coin; Cityscape
	F8595001	Overlay	100 pound models; Single coin; Cityscape
	F8594802	Overlay	80 pound models; Dual coin; Cityscape
	F8595002	Overlay	100 pound models; Dual coin; Cityscape
	F8727901	Overlay	80 pound models; Single coin; International
	F8728001	Overlay	100 pound models; Single coin; International
	F8727902	Overlay	80 pound models; Dual coin; International
	F8728002	Overlay	100 pound models; Dual coin; International
	F8727905	Overlay	80 pound models; World Drop; International
	F8728005	Overlay	100 pound models; World Drop; International
	70645601	Overlay	Secondary single drop; Gray
	70645901	Overlay	Secondary world drop; Gray
	70645701	Overlay	Secondary single drop; Green
	70645801	Overlay	Secondary world drop; Green
10	F8697501	Control Panel Assembly	Coin
11	F170419-3	Door Bezel	
12	F8609701	Access Panel Retaining Spacer	
13	F8552702	Access Panel	
14	F8589501	Screw	
15	56079	Panel Locator	
16	70030501	Expansion Clip	
17	F8117601	Screw	
18	F8552803	Front Panel	Coin
19	M412763	Rivet	

© Copyright, Alliance Laundry Systems LLC – DO NOT COPY or TRANSMIT

Front Panels and Control Panel - Card Ready and Central Pay Models - Design 4

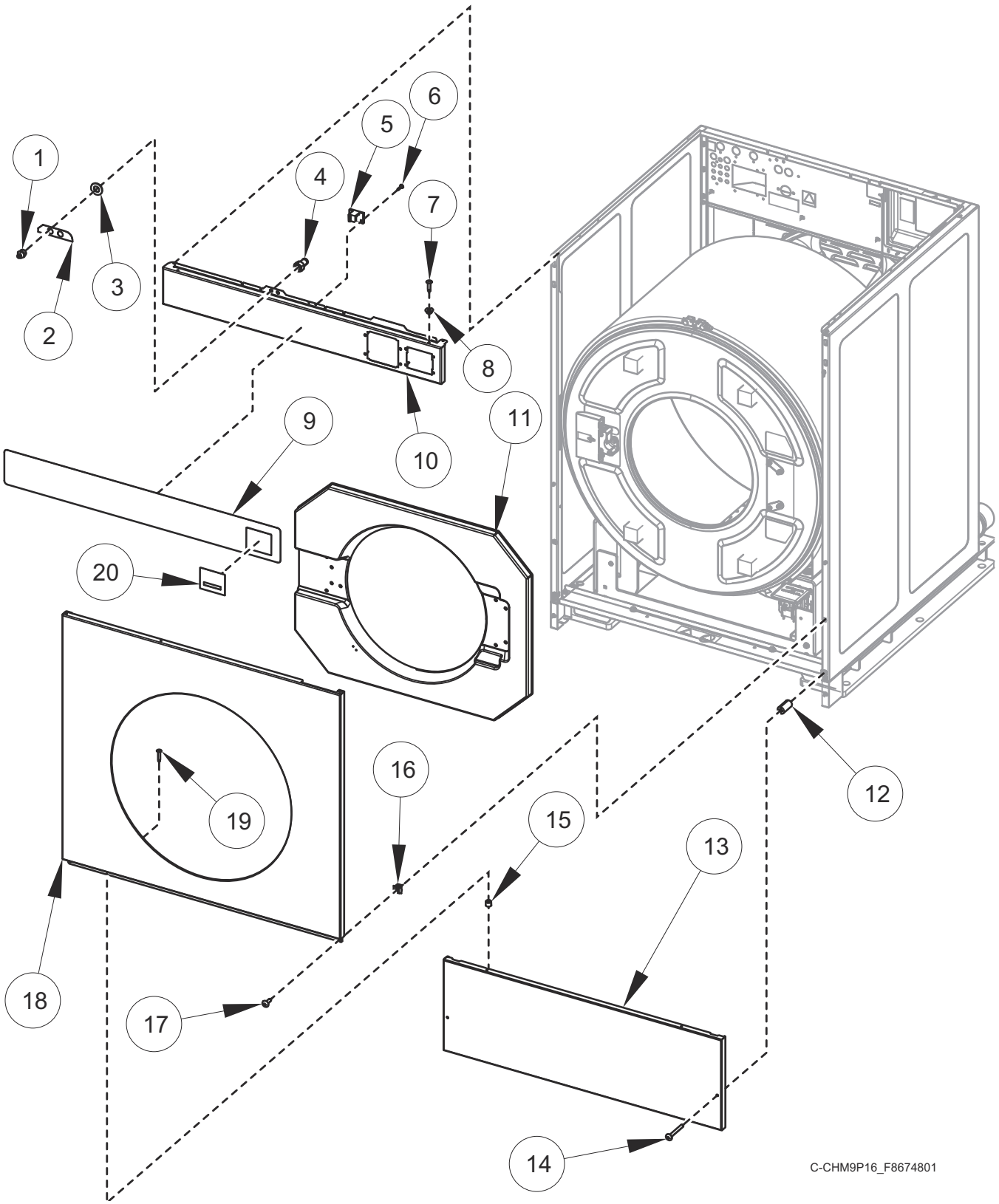

© Copyright, Alliance Laundry Systems LLC – DO NOT COPY or TRANSMIT

Front Panels and Control Panel - Card Ready and Central Pay Models - Design 4

REF	PART NO.	DESCRIPTION	COMMENTS
1	F190701	Grease Fitting	
2	F8613501	Label	Grease instruction notice
3	70292801	Washer	
4	F422114	Air Coupling	
	F8245713	Hose	
5	F8201001	Top Cover Latch	
6	F431215	Pop Rivet	
7	70412601	Pop Rivet	
8	F8201101	Washer	
9	F8641603	Overlay	Card ready models; Gray
	F8641604	Overlay	Central pay models; Gray
	F8594303	Overlay	80 pound card ready models; Green
	F8594403	Overlay	100 pound central pay models; Green
	F8594903	Overlay	80 pound card ready models; Gray/green
	F8595003	Overlay	100 pound central pay models; Gray/green
10	F8552604	Control Panel Assembly	
11	F8659301	Door Bezel	
12	F8609701	Access Panel Retaining Spacer	
13	F8552702	Access Panel	
14	F8589501	Screw	
15	56079	Panel Locator	
16	70030501	Expansion Clip	
17	F8117601	Screw	
18	F8552802	Front Panel	
19	M412763	Rivet	
20	70556501	Overlay	Card ready models; Gray
	70556502	Overlay	Central pay models; Gray
	70518101	Overlay	Card ready models; Green
	70518102	Overlay	Central pay models; Green

© Copyright, Alliance Laundry Systems LLC – DO NOT COPY or TRANSMIT

Front Panels and Control Panel - Card Ready and Central Pay Models - Design 6

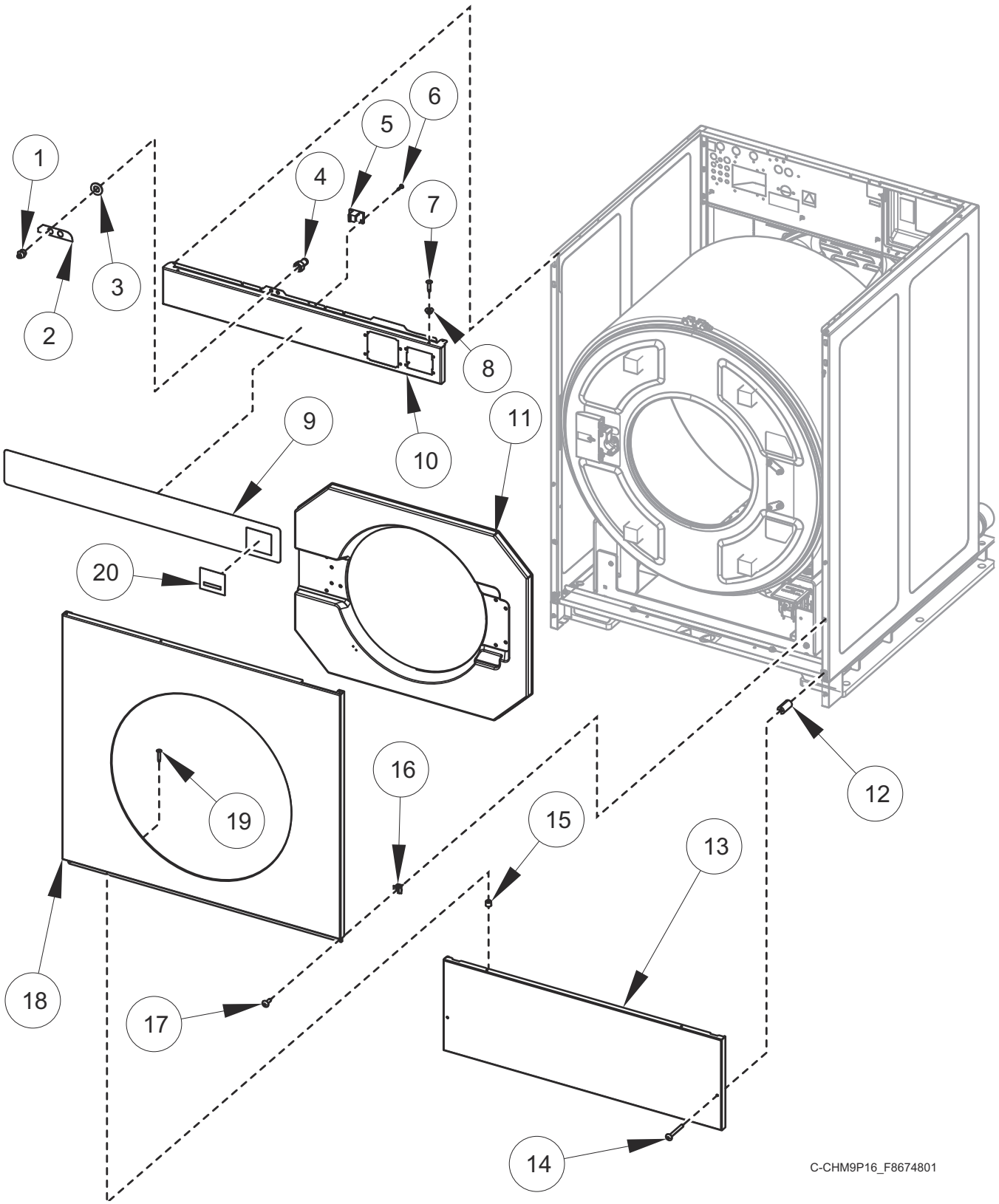

© Copyright, Alliance Laundry Systems LLC – DO NOT COPY or TRANSMIT

Front Panels and Control Panel - Card Ready and Central Pay Models - Design 6

REF	PART NO.	DESCRIPTION	COMMENTS
1	F190701	Grease Fitting	
2	F8613501	Label	Grease instruction notice
3	70292801	Washer	
4	F422114	Air Coupling	
	F8245713	Hose	
5	F8201001	Top Cover Latch	
6	F431215	Pop Rivet	
7	70412601	Pop Rivet	
8	F8201101	Washer	
9	F8692603	Overlay	Card ready models
	F8693103	Overlay	Card ready models; Cityscape
	F8693603	Overlay	Card ready models; Citron
	F8694103	Overlay	Card ready models; International
	F8694104	Overlay	Central pay models; International
10	F8697502	Control Panel Assembly	
11	F8659301	Door Bezel	
12	F8609701	Access Panel Retaining Spacer	
13	F8552702	Access Panel	
14	F8589501	Screw	
15	56079	Panel Locator	
16	70030501	Expansion Clip	
17	F8117601	Screw	
18	F8685902	Front Panel	Card ready models
	F8685904	Front Panel	Central pay models
19	M412763	Rivet	
20	70646001	Overlay	Secondary Card ready models; Gray
	70646002	Overlay	Secondary Central pay models; Gray
	70646101	Overlay	Secondary Card ready models; Green
	70646102	Overlay	Secondary Central pay models; Green

© Copyright, Alliance Laundry Systems LLC – DO NOT COPY or TRANSMIT

Front Panels and Control Panel - Card Ready and Central Pay Models - Design 7

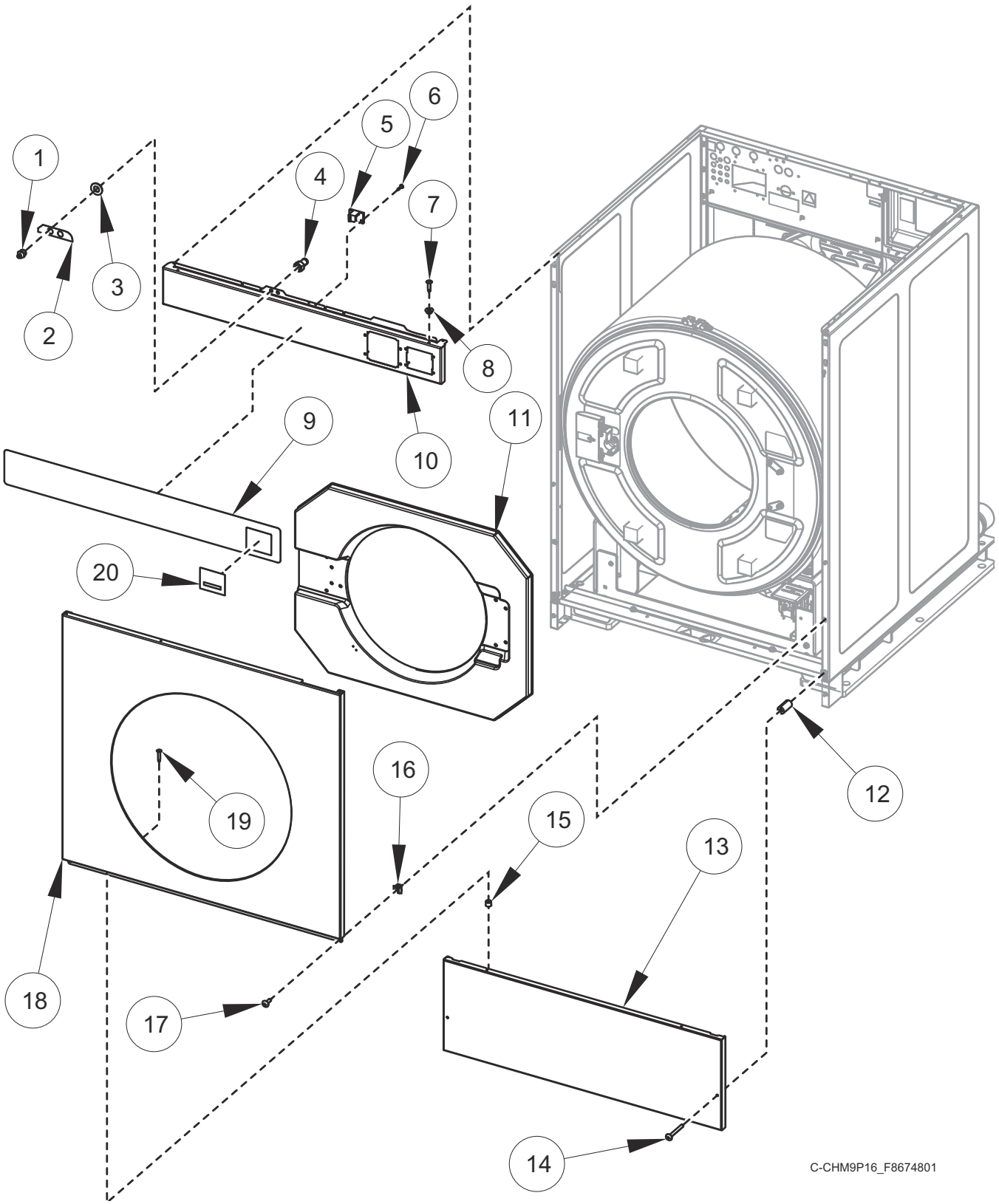

© Copyright, Alliance Laundry Systems LLC – DO NOT COPY or TRANSMIT

Front Panels and Control Panel - Card Ready and Central Pay Models - Design 7

REF	PART NO.	DESCRIPTION	COMMENTS
1	F190701	Grease Fitting	
2	F8613501	Label	Grease instruction notice
3	70292801	Washer	
4	F422114	Air Coupling	
	F8245713	Hose	
5	F8201001	Top Cover Latch	
6	F431215	Pop Rivet	
7	70412601	Pop Rivet	
8	F8201101	Washer	
9	F8591403	Overlay	80 pound card ready models
	F8591503	Overlay	100 pound card ready models
	F8594303	Overlay	80 pound card ready models; Citron
	F8594403	Overlay	100 pound card ready models; Citron
	F8594903	Overlay	80 pound card ready models; Cityscape
	F8595003	Overlay	100 pound card ready models; Cityscape
	F8727903	Overlay	80 pound card ready models; International
	F8728003	Overlay	100 pound card ready models; International
	F8727905	Overlay	80 pound central pay models; International
	F8728005	Overlay	100 pound central pay models; International
10	F8697502	Control Panel Assembly	
11	F8659301	Door Bezel	
12	F8609701	Access Panel Retaining Spacer	
13	F8552702	Access Panel	
14	F8589501	Screw	
15	56079	Panel Locator	
16	70030501	Expansion Clip	
17	F8117601	Screw	
18	F8552804	Front Panel	
19	M412763	Rivet	
20	70646001	Overlay	Secondary Card ready models; Gray
	70646002	Overlay	Secondary Central pay models; Gray
	70646101	Overlay	Secondary Card ready models; Green
	70646102	Overlay	Secondary Central pay models; Green

© Copyright, Alliance Laundry Systems LLC – DO NOT COPY or TRANSMIT

Rear and Top Panels

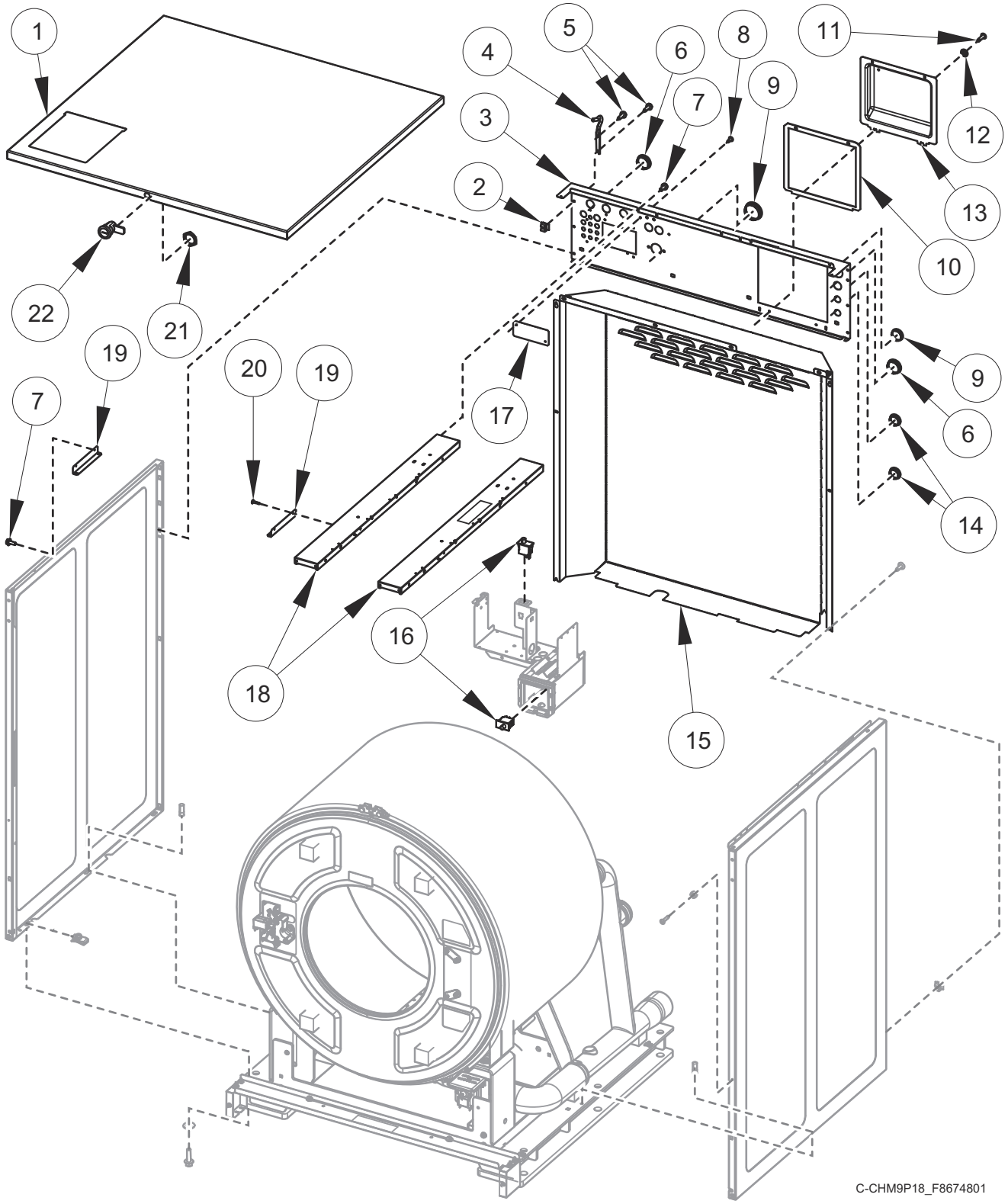

© Copyright, Alliance Laundry Systems LLC – DO NOT COPY or TRANSMIT

Rear and Top Panels

REF	PART NO.	DESCRIPTION	COMMENTS
1	F8553301	Top Cover	80 pound models
	F8553302	Top Cover	100 pound models
2	70030501	Expansion Clip	
3	F8553401	Valve Panel	
4	F8258601	Top Cover Hinge	
5	F8206901	Screw	
6	F8223901	Plug	
7	33562	Screw	
8	685847	Pop Rivet	
9	F8223801	Hole Plug	
10	F8542601	Gasket	
11	70412601	Pop Rivet	
12	804501	Washer	
13	F8518301	Terminal Tray Cover	
14	M400985	Plug	
15	F8555301	Rear Panel	
16	70413301	Pushbutton Switch	
17	F8586301	Fill Cover	
18	F8556901	Cabinet Brace	80 pound models
	F8556902	Cabinet Brace	100 pound models
19	F8525701	Dispenser Bracket	
20	F431215	Pop Rivet	
21	44088801	Nut	
22	44089303P	Panel Lock	
	70155603	Key	

© Copyright, Alliance Laundry Systems LLC – DO NOT COPY or TRANSMIT

Side Panels

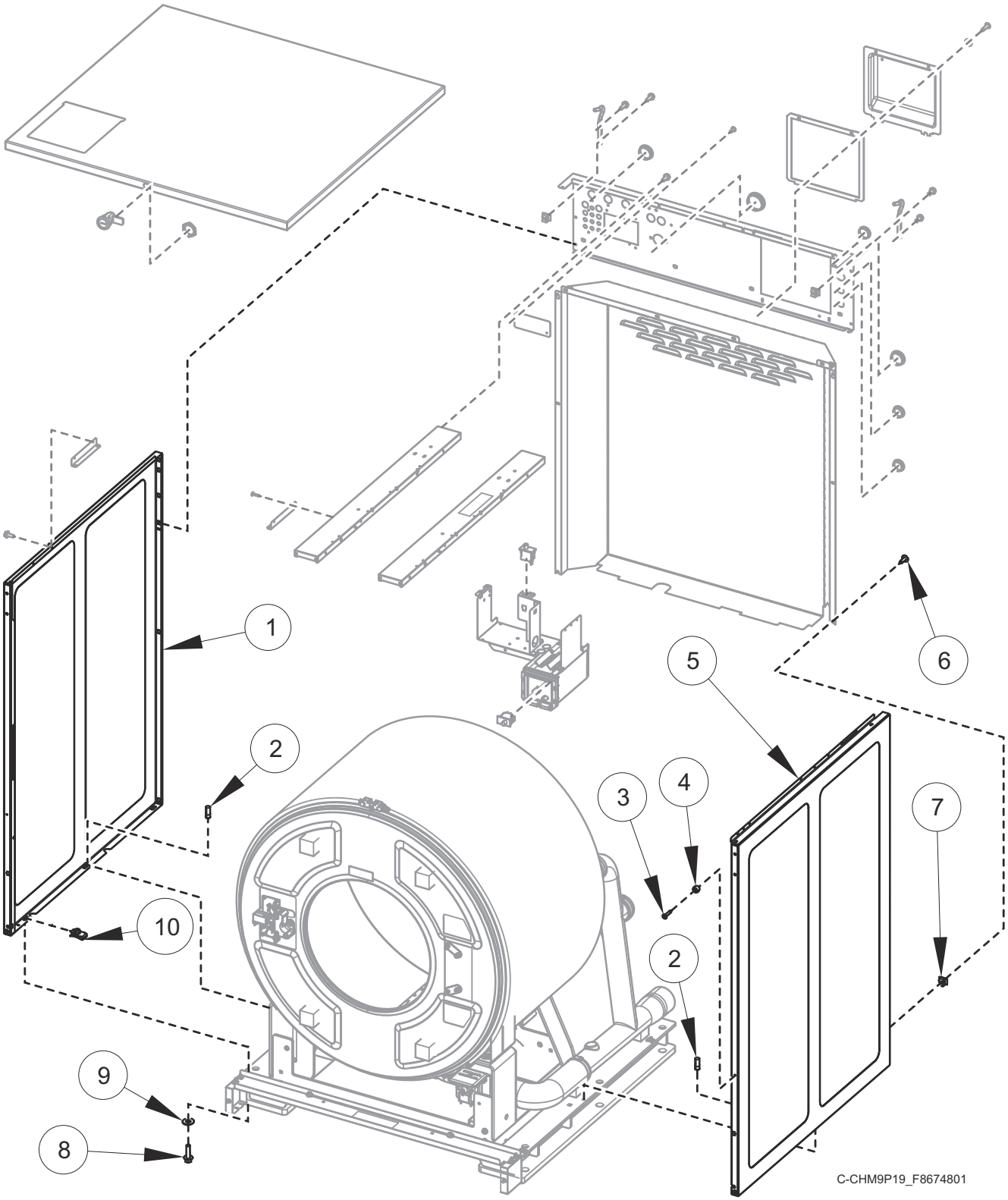

© Copyright, Alliance Laundry Systems LLC – DO NOT COPY or TRANSMIT

Side Panels

REF	PART NO.	DESCRIPTION	COMMENTS
1	F8553002	Side Panel	80 pound models; Left; Stainless steel
	F8553102	Side Panel	100 pound models; Left; Stainless steel
2	F8502101	Pin	
3	M412763	Rivet	
4	56079	Panel Locator	
5	F8553001	Side Panel	80 pound models; Right; Stainless steel
	F8553101	Side Panel	100 pound models; Right; Stainless steel
6	F8117601	Screw	
7	70030501	Expansion Clip	
8	202175	Screw	
9	M405535	Washer	
10	70030401	Nut	

© Copyright, Alliance Laundry Systems LLC – DO NOT COPY or TRANSMIT

Door (Drawing 1 of 2)

Models through serial no. 2208025605

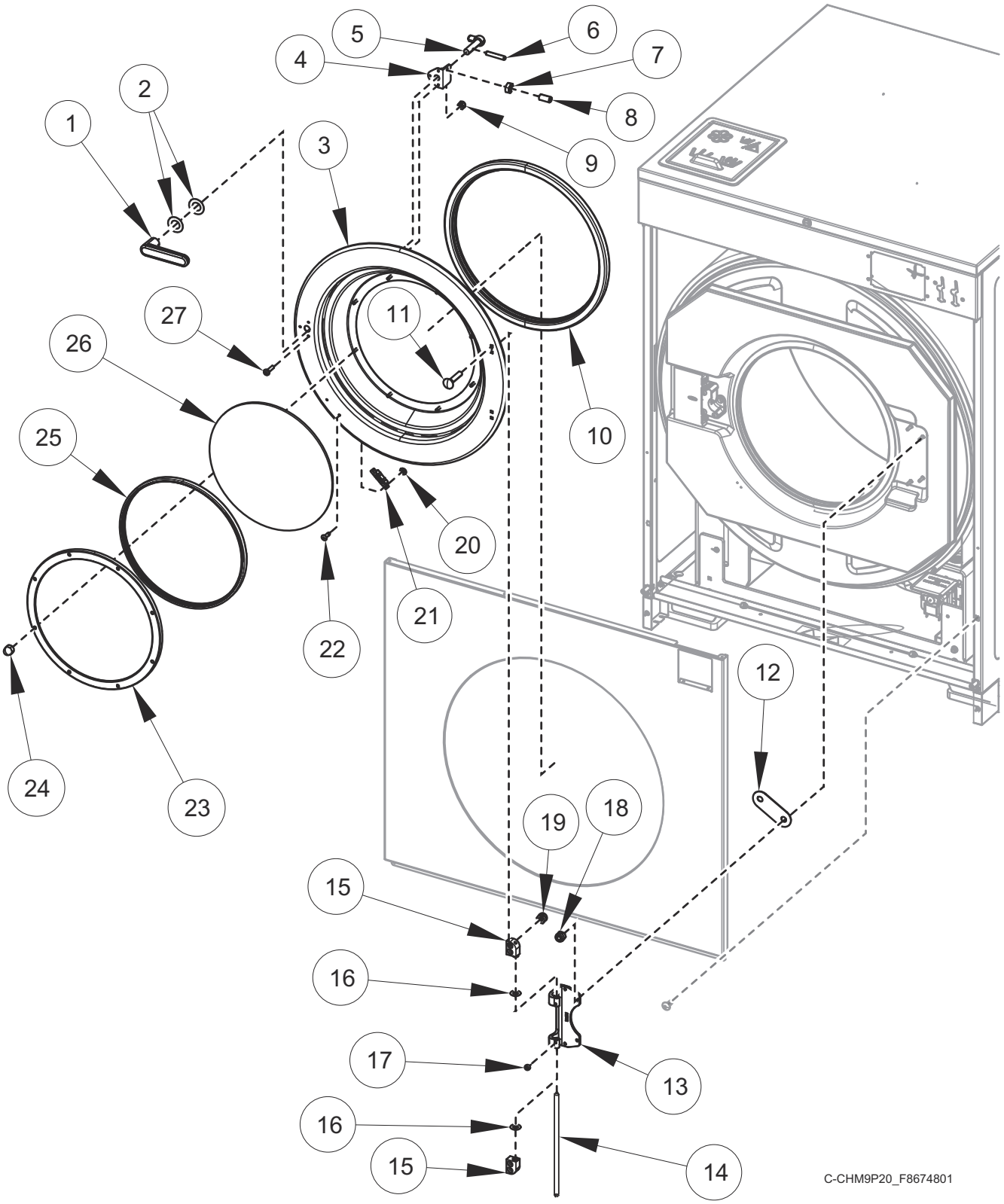

© Copyright, Alliance Laundry Systems LLC – DO NOT COPY or TRANSMIT

Door (Drawing 1 of 2)

REF	PART NO.	DESCRIPTION	COMMENTS
	F8505102	Door Assembly	Includes items 1-11, 13-15 and 20-27
	F8505105	Door Assembly	Chrome; Includes items 1-11, 13-15 and 20-27
	F8505112	Door Assembly	Chrome and green; Includes items 1-11, 13-15 and 20-27
	F8505111	Door Assembly	Green; Includes items 1-11, 13-15 and 20-27
1	F8544701	Door Handle	
2	F431916	Washer	
3	F8505001	Door	
	F8508801	Door	Chrome
4	F8567501	Door Handle Spacer Kit	
5	F8221403	Door Latch Arm Assembly	Includes latch arm shaft, latch arm support and sleeve
6	F431222	Spring Pin	
7	F431041	Nut	
8	F430532	Screw	
9	F430232	Nut	
10	F8440801P	Door Gasket	Design 4
	F8636501	Door Gasket	Design 6; Black
11	F430974	Bolt	
	F8508101	Bolt	Chrome
12	F200131000P	Door Hinge Shim Kit	
13	F190216P	Door Hinge	
14	F602813-3	Rod	
15	F150271	Door Mount	
16	F431929	Washer	Non-ferrous
	F431147	Washer	
17	F430536	Screw	
18	C001236	Nut	
19	F430215	Nut	
20	F431133	Washer	
21	F8390801	Magnet	
22	F431223	Pop Rivet	
23	F8504903	Door Glass Retainer	
	F8504902	Door Glass Retainer	Chrome
24	F8549401	Nut	
25	F8499904	Door Glass Gasket	
26	F8342001	Door Glass	Design 4
	F8342002	Door Glass	Design 4; Green
	535439P	Door Glass	Design 6
27	F8535501	Screw	

© Copyright, Alliance Laundry Systems LLC – DO NOT COPY or TRANSMIT

Door (Drawing 2 of 2)

Models starting serial no. 2208025605

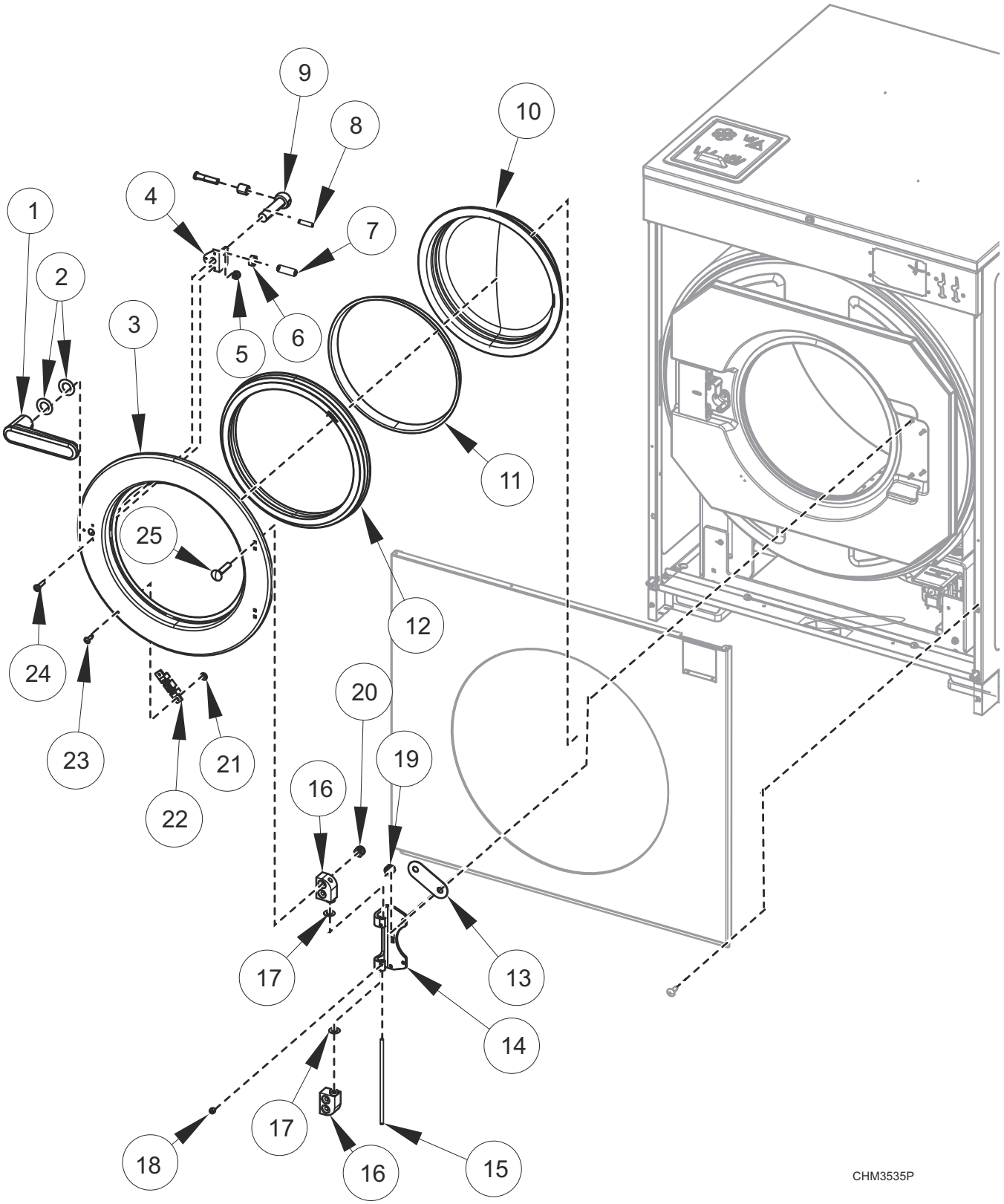

© Copyright, Alliance Laundry Systems LLC – DO NOT COPY or TRANSMIT

Door (Drawing 2 of 2)

REF	PART NO.	DESCRIPTION	COMMENTS
	F8698703	Door Assembly	Gray; Includes items 1-11, 13-15 and 20-27
	F8698704	Door Assembly	Gray plated; Includes items 1-11, 13-15 and 20-27
	F8698705	Door Assembly	Green; Includes items 1-11, 13-15 and 20-27
	F8698706	Door Assembly	Green plated; Includes items 1-11, 13-15 and 20-27
1	F8544701	Door Handle	
2	F431916	Washer	
3	F8687102	Door	
	F8687105	Door	Mirror Polished
4	F8567501	Door Handle Spacer Kit	
5	F430232	Nut	
6	F431041	Nut	
7	F430532	Screw	
8	F431222	Spring Pin	
9	F8221403	Door Latch Arm Assembly	Includes latch arm shaft, latch arm support and sleeve
10	535439P	Door Glass	
11	F8583207	Door Glass Trim	
12	F8636501	Door Gasket	
13	F200131000P	Door Hinge Shim Kit	
14	F190216P	Door Hinge	
15	F602813-3	Rod	
16	F150271	Door Mount	
17	F431929	Washer	Non-ferrous
	F431147	Washer	
18	F430536	Screw	
19	C001236	Nut	
20	F430215	Nut	
21	F431133	Washer	
22	F8390801	Magnet	
23	F431223	Pop Rivet	
24	F8535501	Screw	
25	F430974	Bolt	
	F8508101	Bolt	Chrome

© Copyright, Alliance Laundry Systems LLC – DO NOT COPY or TRANSMIT

Door Lock

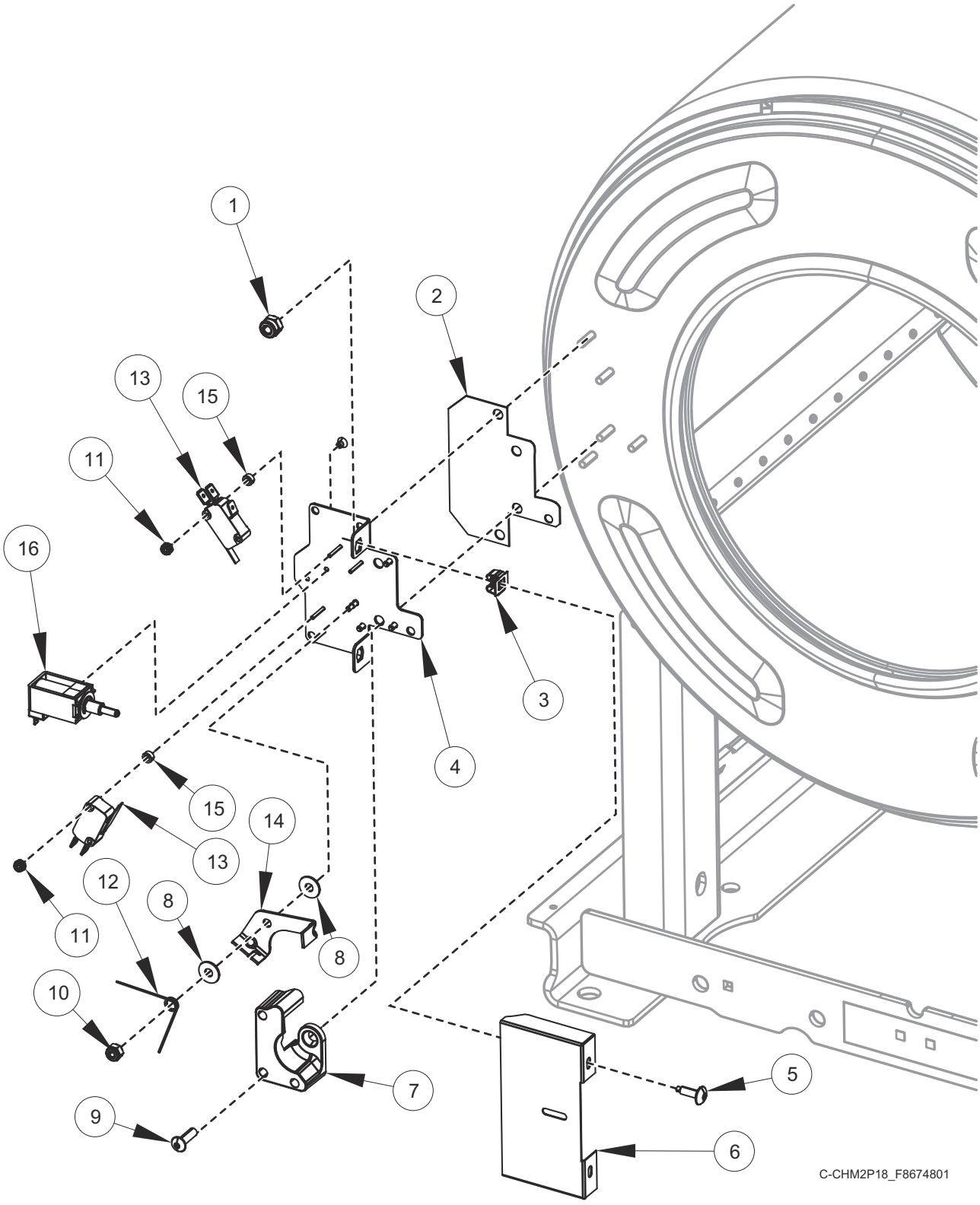

© Copyright, Alliance Laundry Systems LLC – DO NOT COPY or TRANSMIT

Door Lock

REF	PART NO.	DESCRIPTION	COMMENTS
	F8632401	Door Lock Assembly	Includes items 1-16 and F320200 Door Lock Splash
	F8520202	Door Lock Harness	
	F8066804	Reed Switch Assembly	
1	F431024	Nut	
2	F8344401	Door Lock Plate Shim	
3	70030501	Expansion Clip	
4	F8223202	Door Lock Plate Assembly	
5	F8117601	Screw	
6	F8245001	Door Lock Cover	
7	F8344501	Door Lock Catch	
8	F8193101	Washer	
9	F8270701	Bolt	
10	F430232	Nut	
12	F8070301	Torsion/Door Lock Spring	
13	F200203200	Door Lock Microswitch	
14	F8223401	Door Lock Switch Lever	
15	F431901	Spacer	
16	F977P3	Door Lock Solenoid Replacement Kit	

© Copyright, Alliance Laundry Systems LLC – DO NOT COPY or TRANSMIT

Shell Front and Basket

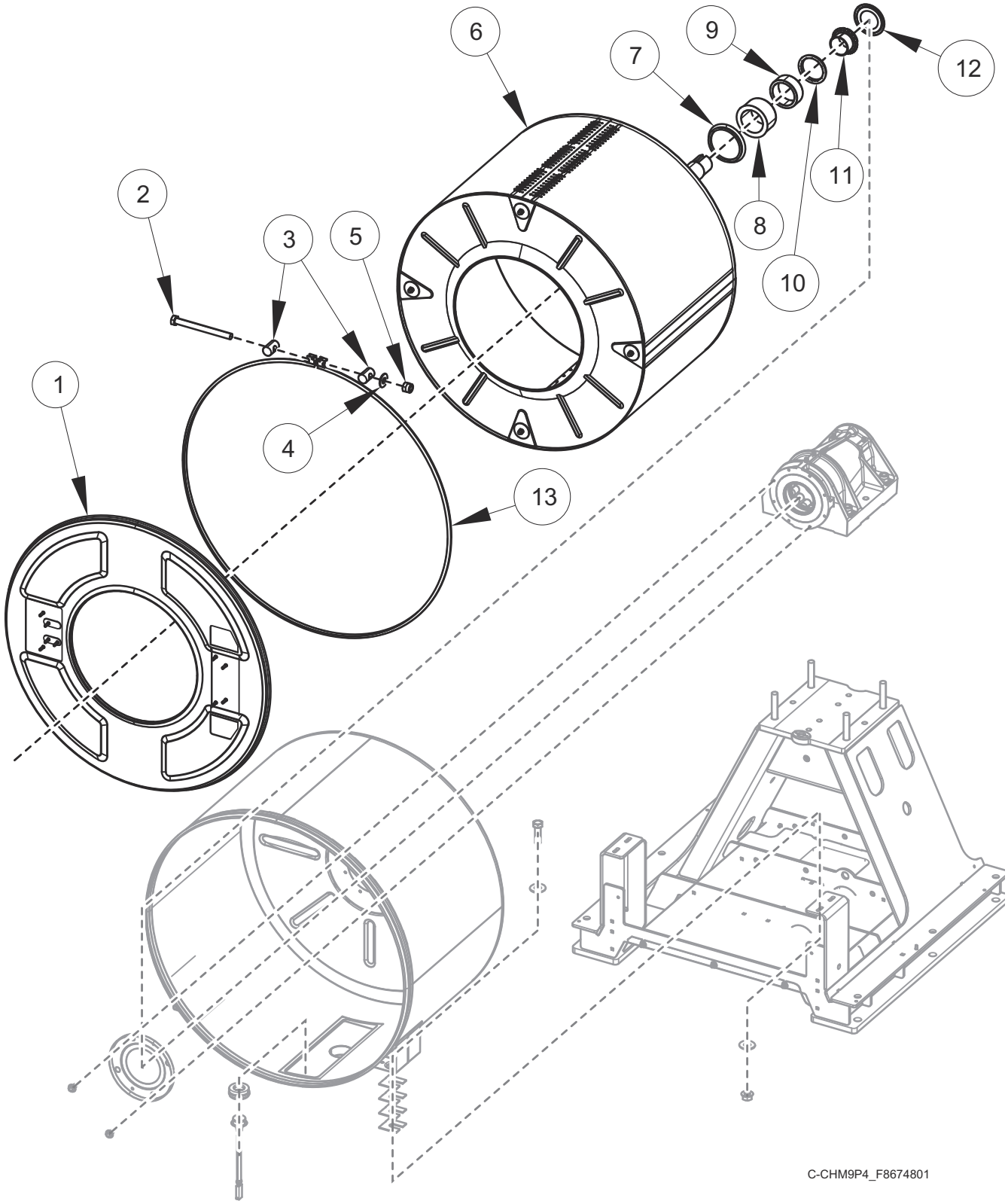

© Copyright, Alliance Laundry Systems LLC – DO NOT COPY or TRANSMIT

Shell Front and Basket

REF	PART NO.	DESCRIPTION	COMMENTS
1	F8222701	Shell Front	80 pound models
	F8229801	Shell Front Assembly	100 pound models
2	F8673701	Screw	
3	F8302701	Pin	
4	M400080	Washer	
5	F430218	Nut	
6	F8516901	Basket Assembly	80 pound models
	F8516904	Basket	80 pound models; Rain; Viton
	F8516903	Basket Assembly	80 pound models; Viton
	F8516902	Basket	80 pound models; Rain
	F8517003	Basket Assembly	100 pound models; Viton
	F8517004	Basket	100 pound models; Rain; Viton
	F8517001	Basket Assembly	100 pound models
	F8517002	Basket	100 pound models; Rain
7	F8337101	Excluder Seal	Standard
	F8527701	Excluder Seal	Viton
8	F8343911	Seal Sleeve	
9	F8280504	Bearing	
10	F8464901	Insertion Sleeve	
11	F8382501	Sleeve Adapter	
12	F8379301	Seal	
13	F8537808	Shell Band Kit	

© Copyright, Alliance Laundry Systems LLC – DO NOT COPY or TRANSMIT

Shell

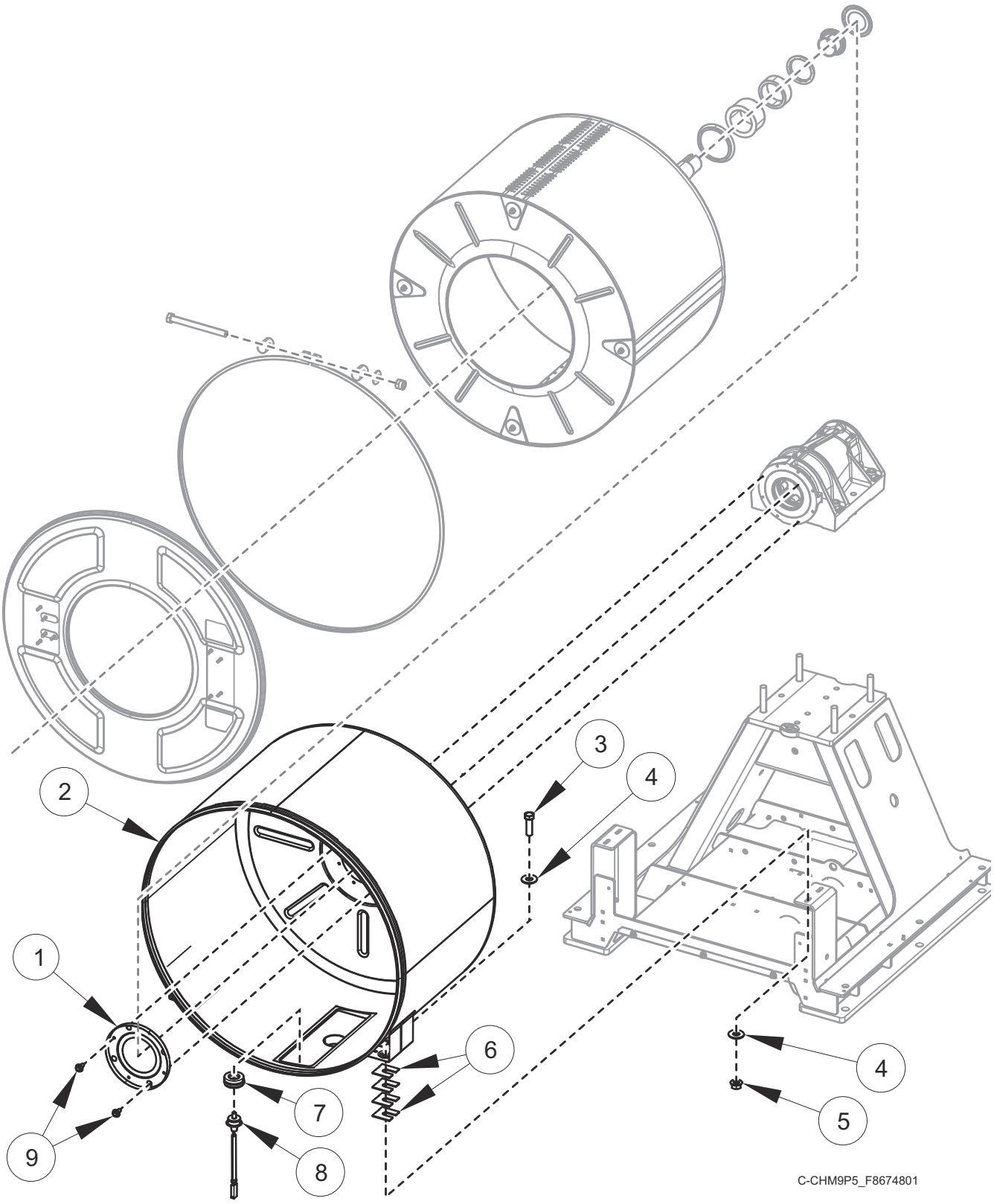

© Copyright, Alliance Laundry Systems LLC – DO NOT COPY or TRANSMIT

Shell

REF	PART NO.	DESCRIPTION	COMMENTS
1	F8550101	Seal Wear Plate	
2	F8543802	Shell	80 pound models; Electric and steam heat
	F8543902	Shell	100 pound models; Electric and steam heat
	F8543803	Shell	80 pound models
	F8543903	Shell	100 pound models
3	F430900	Screw	
4	M400081	Washer	
5	F430218	Nut	
6	F8402701	Washer	
7	2251000400	Temperature Probe Grommet	
8	F8538801	Thermistor	
9	F8442702	Screw	

© Copyright, Alliance Laundry Systems LLC – DO NOT COPY or TRANSMIT

Bearing Housing and Frame Shield

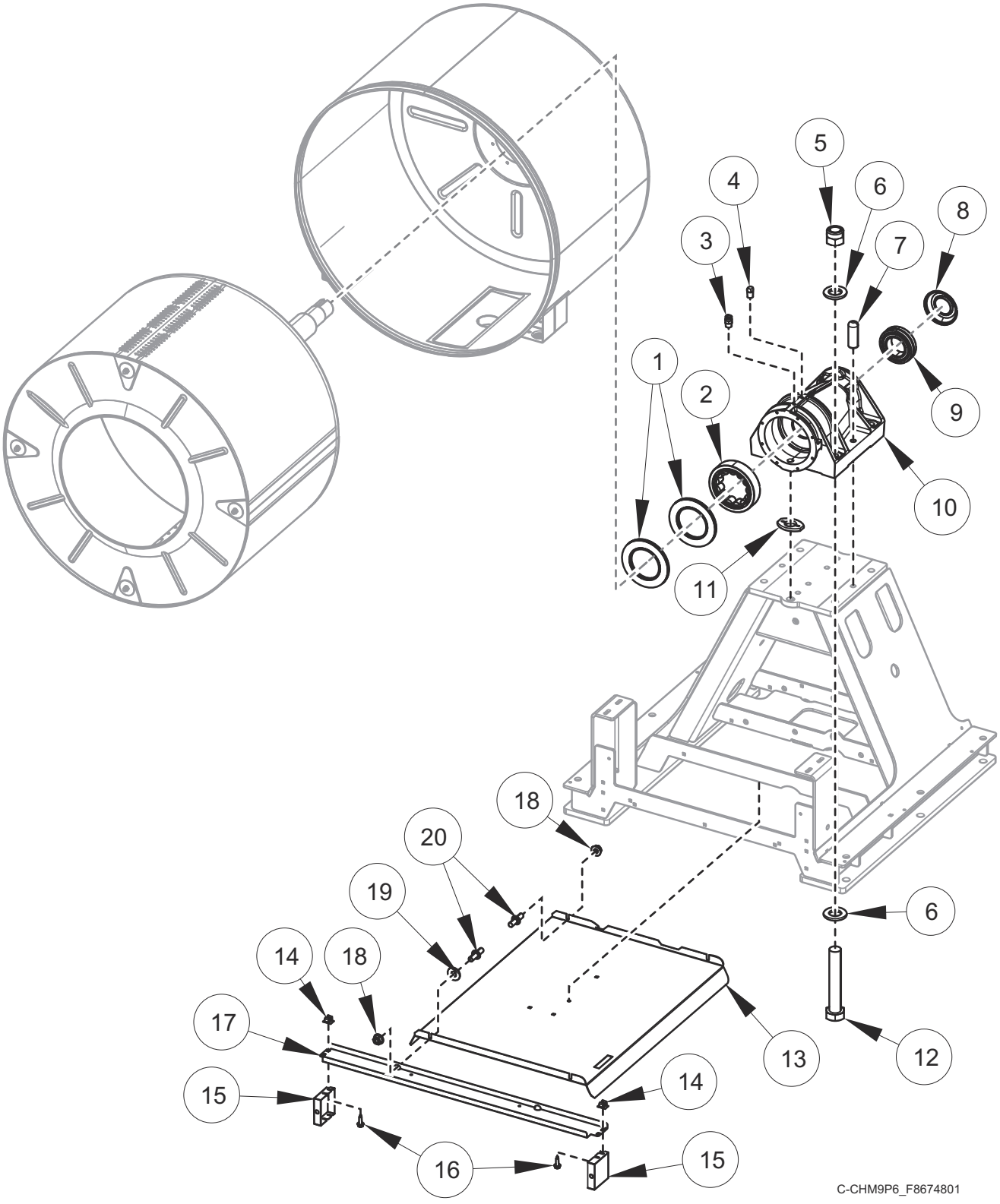

© Copyright, Alliance Laundry Systems LLC – DO NOT COPY or TRANSMIT

Bearing Housing and Frame Shield

REF	PART NO.	DESCRIPTION	COMMENTS
	F8474601	Bearing Housing Assembly	Includes items 1-4 and 8; Standard
	F8474602	Bearing Housing Assembly	Includes items 1-4 and 8; Viton
	F8503801	Bearings and Seals Kit	Standard NBR; Includes items 1, 2, 5-9, 12, F8337101 Excluder Seal, F8502305 Shell Band Gasket and F410102 Clear Sealant
	F8503701	Bearings and Seals Kit	Viton; Includes items 1, 2, 5-9, 12, F8527701 Excluder Seal, F8502305 Shell Band Gasket and F410102 Clear Sealant
1	F8203807	Radial Seal	Standard
	F8203808	Radial Seal	Viton
2	F8280504	Bearing	
3	J1408004	Connector	
4	M403052	Plug	
5	F430248	Nut	
6	F8171201	Washer	
7	F8406502	Dowel Pin	
8	F8528501	Radial Lip Seal	
9	F8375401	Bearing	
10	F8744801R	Bearing Housing	
11	F8452701	Seal Scupper Pad	
12	F8313701	Screw	
13	F8509501	Frame Shield	
14	70030501	Expansion Clip	
15	F8557401	False Side Panel	80 pound models
	F8557402	False Side Panel	100 pound models
16	F8206901	Screw	
17	F8577901	Frame Shield Extension	80 pound models
	F8577902	Frame Shield Extension	100 pound models
18	44087201	Nut	
19	M400080	Washer	
20	70334702	Stud	

© Copyright, Alliance Laundry Systems LLC – DO NOT COPY or TRANSMIT

Drain Plumbing

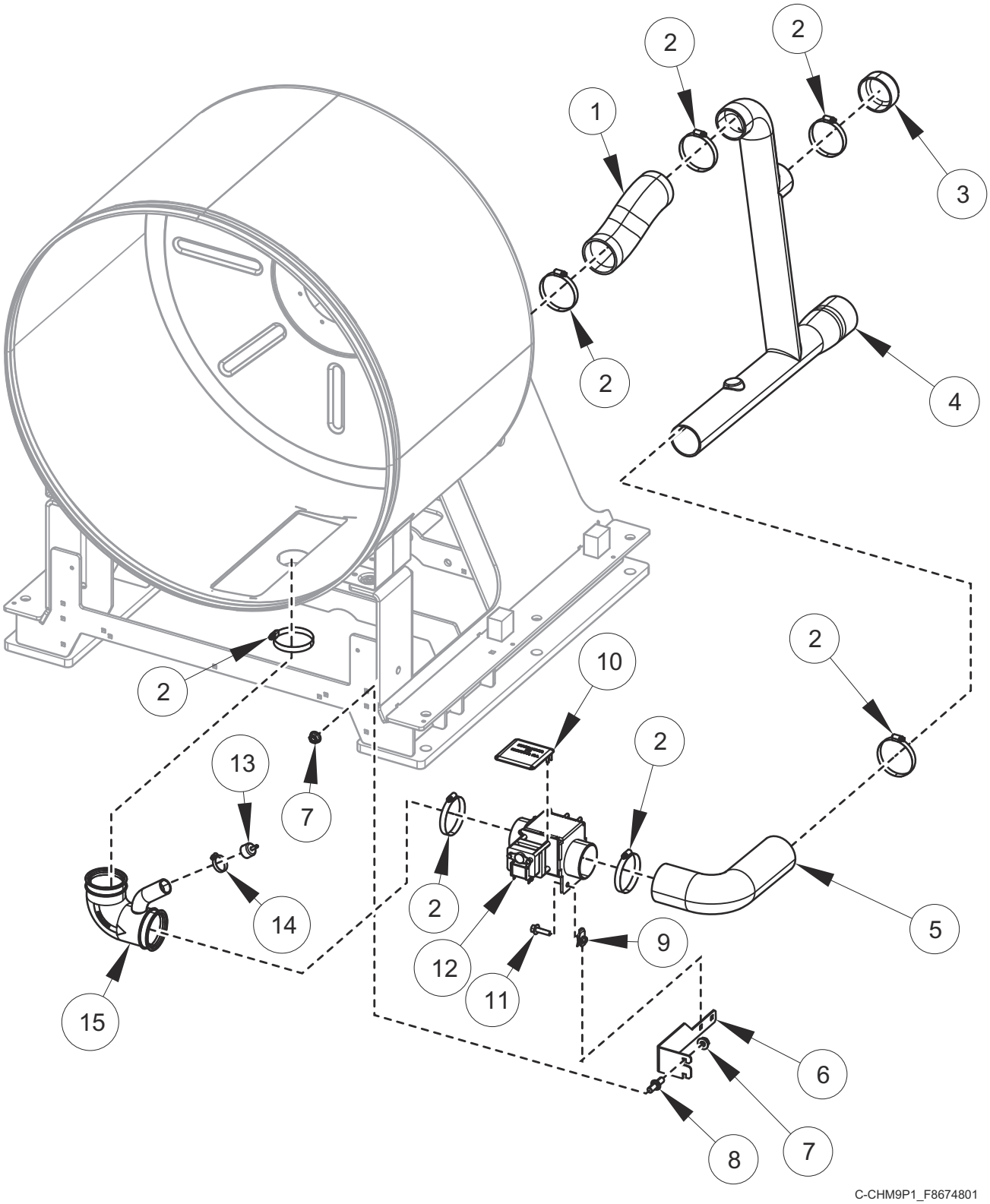

© Copyright, Alliance Laundry Systems LLC – DO NOT COPY or TRANSMIT

Drain Plumbing

REF	PART NO.	DESCRIPTION	COMMENTS
	F8520002	Drain Valve Harness	
	F200165100	Drain Hose	
1	F0150488-00	Overflow Hose	
2	F200201	Hose Clamp	
3	F0150502-00	Plug	
4	F8386807	Molded Drain	
5	C000412	Water Reuse Hose	
6	F8543601	Drain Valve Bracket	
7	44087201	Nut	
8	70334702	Stud	
9	70030401	Nut	
10	F200133600	Drain Valve Cover	
11	F8117601	Screw	
12	F8406308	Drain Valve	3 inch; 120 Volt; Right; NO
	F8577201	Drain Valve Kit	3 inch; 230 Volt; Right; NO; Includes item 10
	F200166302	Drain Valve Kit	3 inch; 120 Volt; Left; NO; Includes item 10
	F200166402	Drain Valve Kit	3 inch; 230 Volt; Left; NO; Includes item 10
13	F8579301	Pressure Cap	
14	36802	Hose Clamp	
15	F8542001	Drain Hose	
	F8542201	Drain Hose	Steam and electric heat

© Copyright, Alliance Laundry Systems LLC – DO NOT COPY or TRANSMIT

Fill Plumbing

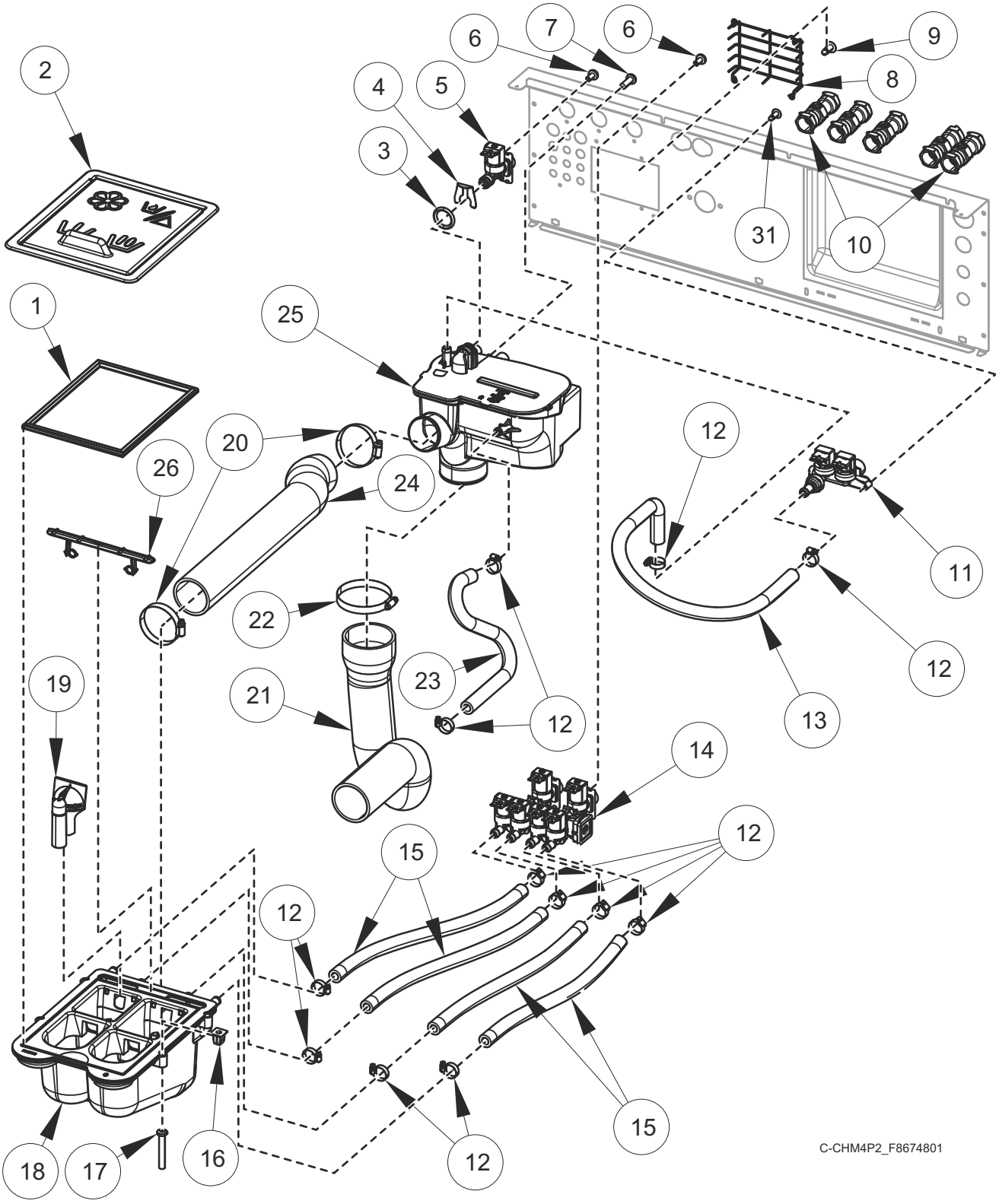

© Copyright, Alliance Laundry Systems LLC – DO NOT COPY or TRANSMIT

Fill Plumbing

REF	PART NO.	DESCRIPTION	COMMENTS
	F8047403	Dispenser	Includes Items 18, 19 and 26
	F8520102	Fill Valve Harness	
	223/00243/00	Y-Connector	Metric
	F8544601	Fill Hose Kit	WRAS; Includes item 11 and F8665602 Water Hose Kit
	F200164	Water Hose	Y fitting; 2 required; Standard
	F200166	Water Hose	Metric thread
	44069101	Hose Fitting	3/4 inch; Standard
	G582P3	Diaphragm and Guide Kit	Elbi
	F8739101	Diaphragm Kit	Elbi; Blue tip
1	B12568601	Dispenser Gasket	
2	F8563203	Dispenser Cover	Gray; Icons and text
	F8563201	Dispenser Cover	Gray; Icons
3	F8569101	O-Ring	
4	F8566801	Clip	
5	F8565201	Valve	3/4 inch; Standard
	F8565202	Valve	3/4 inch; Standard
6	F8230301	Screw	
7	800548	Screw	
8	F8589601	Vacuum Breaker Guard	
9	70058501	Pop Rivet	
10	F8301201	Double Check Valve	WRAS
11	70519801	Mixing Valve	Standard
	70519802	Mixing Valve	Metric
12	36801	Hose Clamp	
13	F8598801	Auxiliary Fill Hose	
14	F8529701	Manifold Valve	Standard
	F8529702P	Manifold Valve	Metric
15	F8232012	Hose	
16	F0431807-00	Nut	
17	F8535601	Screw	
18	F8437902	Dispenser Weldment	
19	F8047901	Siphon Cover	
20	F200213	Hose Clamp	
21	F8529605	P-Trap Hose	
22	F200201	Hose Clamp	
23	F8616405	Rear Vent Hose	
24	F8529405	Supply Vacuum Hose	80 pound models
	F8529406	Supply Vacuum Hose	100 pound models
25	F8517503	Vacuum Breaker Assembly	With inlet and fill
	F8517502	Vacuum Breaker Assembly	With inlet; WRAS
	F8517501	Vacuum Breaker Assembly	With fill
	F8517504	Vacuum Breaker Assembly	WRAS
26	F8047801	Access Cover	

© Copyright, Alliance Laundry Systems LLC – DO NOT COPY or TRANSMIT

Motor, Pulley and Belt

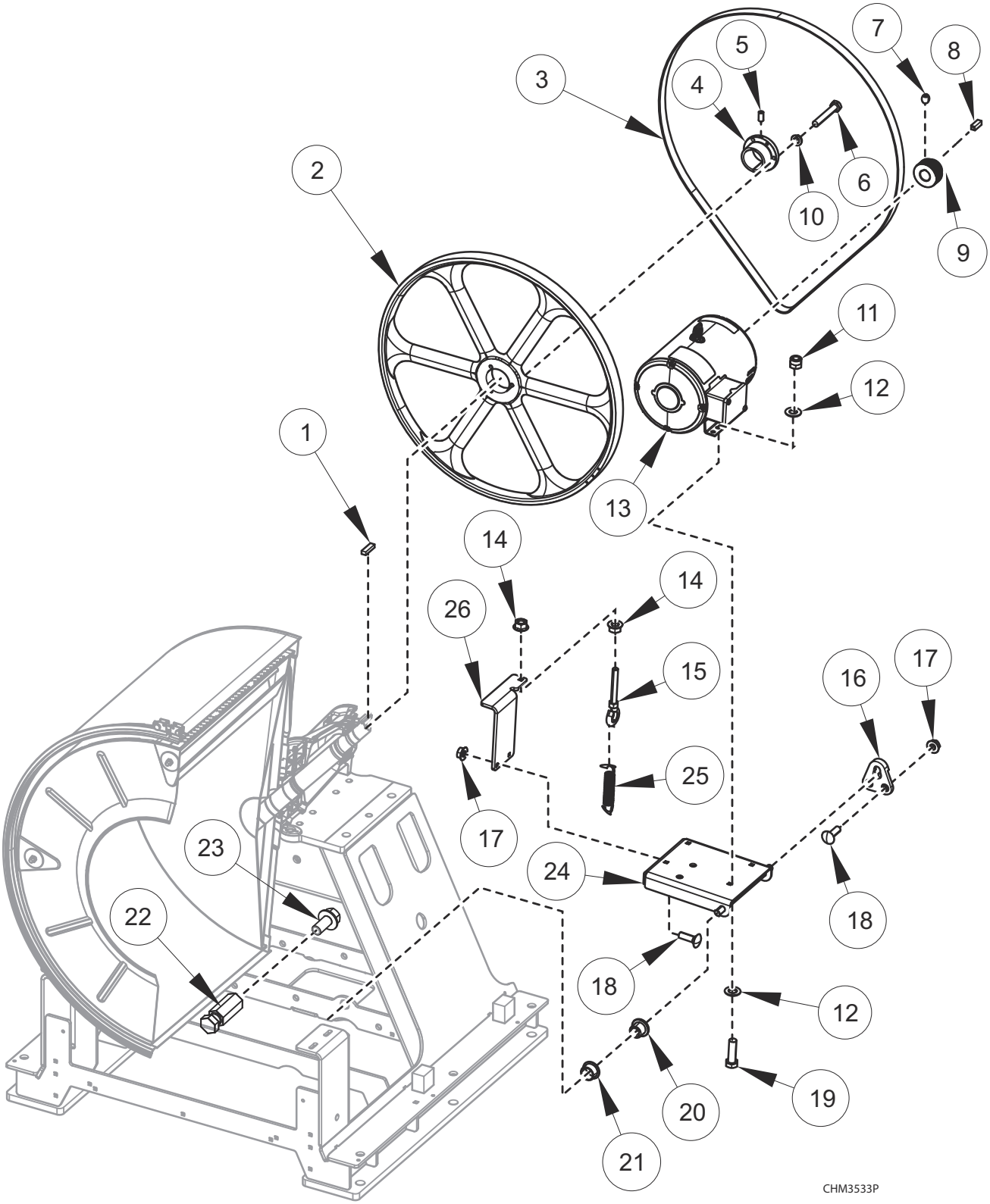

© Copyright, Alliance Laundry Systems LLC – DO NOT COPY or TRANSMIT

Motor, Pulley and Belt

REF	PART NO.	DESCRIPTION	COMMENTS
	F8519005	Motor Harness	5 hp
	F8519010	Motor Harness	EMI filter
	F8748601	Spring Stud Kit	
1	44049002	Key	
2	F8381801	Sheave Pulley	
3	F8382819	Belt	80 pound models; Poly-V; 955J12
	70276205P	Belt	100 pound models
4	F8649401	Flanged Bushing	
5	44048902	Screw	
6	44079203	Screw	
7	M400077	Screw	
8	H8752006H	Key	
9	F8362601	Motor Pulley	80 pound models
	F8362602	Motor Pulley	100 pound models
10	M400013	Washer	
11	F8387601	Nut	
12	F8366601	Washer	
13	F8510001	Motor	5 hp
14	44087301	Nut	
15	F8319503	Eye Bolt	
16	F8542101	Drain Hose	
17	44087201	Nut	
18	F8402801	Bolt	
19	800461	Screw	
20	F8535202	Flanged Isolator	
21	F8333302	Flanged Bushing	
22	F8634701	Stud	
23	M405503	Bolt	
24	F8441805	Motor Bracket Weldment	
25	F8440701	Extension Spring	
26	F8342201	Motor Spring Bracket	

© Copyright, Alliance Laundry Systems LLC – DO NOT COPY or TRANSMIT

Electric Heating

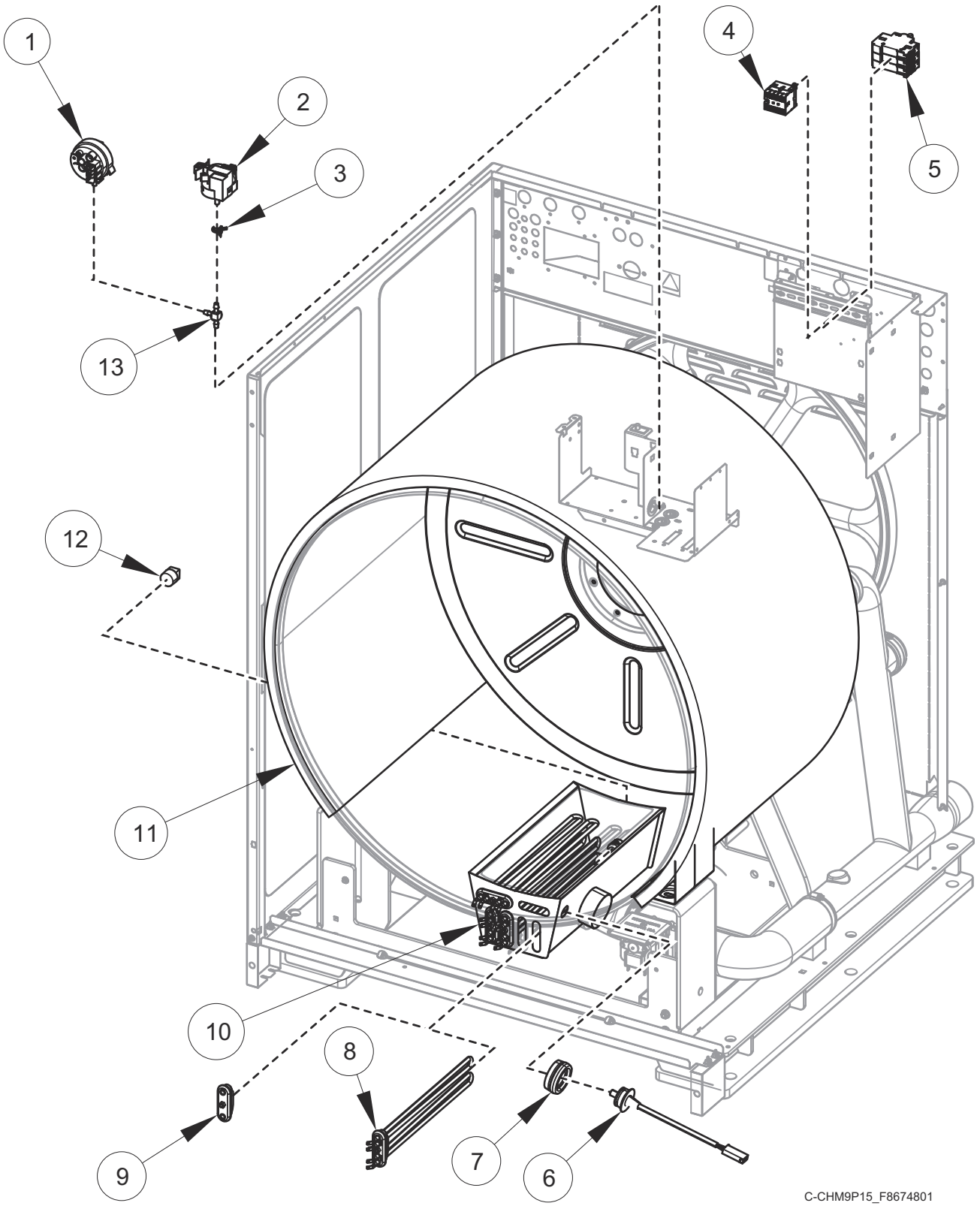

© Copyright, Alliance Laundry Systems LLC – DO NOT COPY or TRANSMIT

Electric Heating

REF	PART NO.	DESCRIPTION	COMMENTS
	F8584802	Electric Heat Element Harness	6 element and ground
	F8619101	Power Harness	
	F8528003	Harness	
	F8564004	Harness	N, P and Q voltage
	F8598302	Harness	Temperature
	F8568901	Jumper	N and P voltage
	F8583501	Jumper	N, P and Q voltage
1	F8609101	Water Level Pressure Switch	
2	39282	Hose Clamp	
3	F8623401	Pressure Sensor	
4	70482601	Contactor	
5	70488101	Circuit Breaker	
6	F8538801	Thermistor	
7	2251000400	Temperature Probe Grommet	
8	F8568301	Heating Element	4200W; 230 Volt
9	F360202	Heating Element Plug	
10	F8543802	Shell	80 pound models
	F8543902	Shell	100 pound models
11	F8209105	Shell Insulation	
12	F420408	Plug	
13	203464	Barbed Tee	

© Copyright, Alliance Laundry Systems LLC – DO NOT COPY or TRANSMIT

Steam Heating

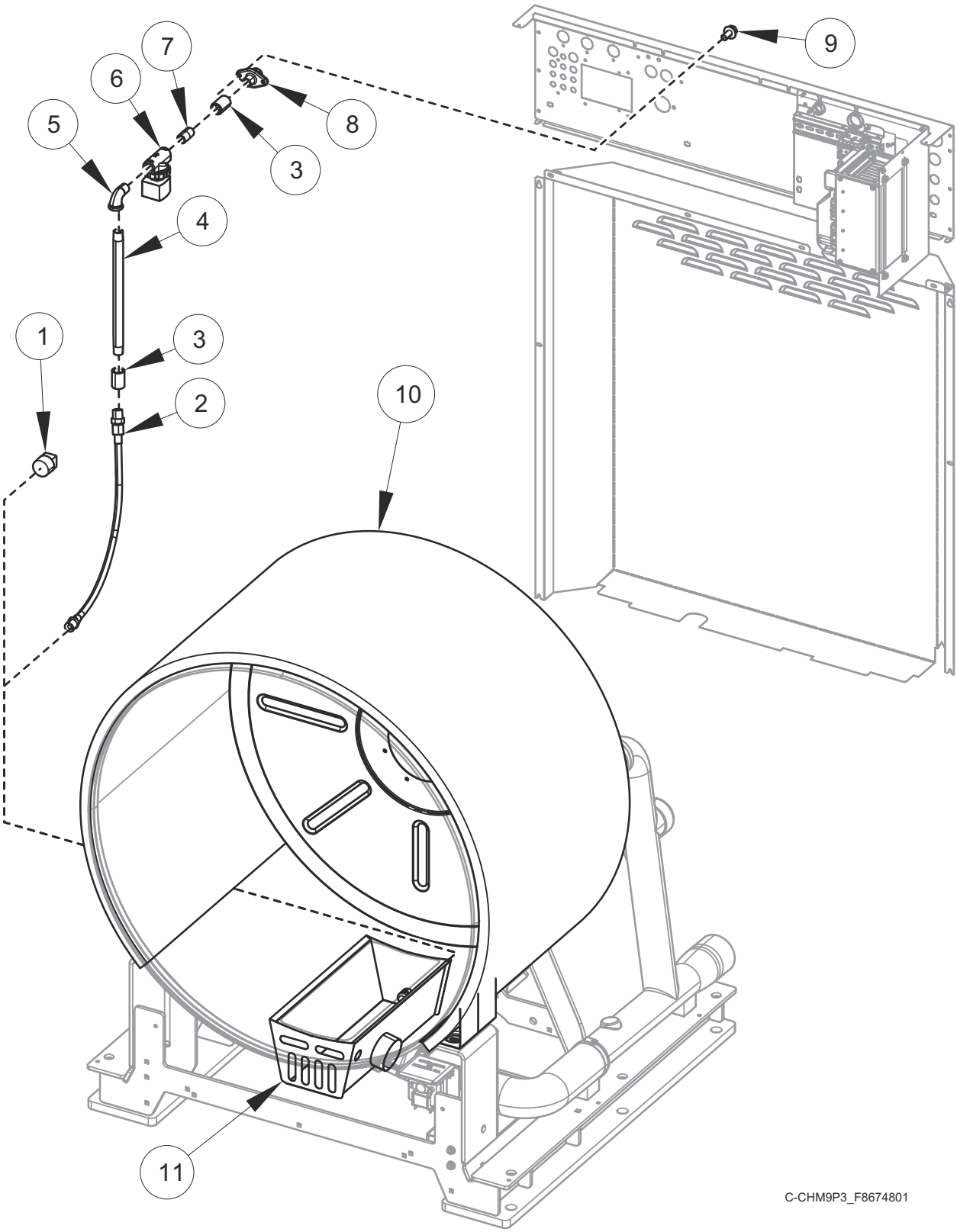

© Copyright, Alliance Laundry Systems LLC – DO NOT COPY or TRANSMIT

Steam Heating

REF	PART NO.	DESCRIPTION	COMMENTS
	F8662601	Steam Kit	Includes Items 1-9, 901403 Nipple, F270307 Steam Filter, F8520704 Harness, insulation and labels
	F270307	Steam Filter	1/2 inch
	F8520704	Harness	Steam valve
	F8564004	Harness	
	F8233702	Insulation	Steam pipe; 6 inches
	F8233704	Insulation	Steam pipe; 12 inches
	F8233708	Pipe Insulation	Steam pipe; 20 inches
	F410300	Pipe Insulation	Steam pipe; 36 inches
	F8379505	Valve Rebuild Kit	
1	F420408	Plug	
2	F200197	Steam Hose	
3	F8116301	Coupling	
4	70214101	Pipe Nipple	
5	H86070034	Street Elbow	
6	F8322805	Valve	
	F8515001	Coil	
7	70435601	Pipe Nipple	
8	F8362701	Coupling	
9	70321501	Screw	
10	F8209105	Shell Insulation	
11	F8543802	Shell	80 pound models
	F8543902	Shell	100 pound models

© Copyright, Alliance Laundry Systems LLC – DO NOT COPY or TRANSMIT

Special Tools and Kits

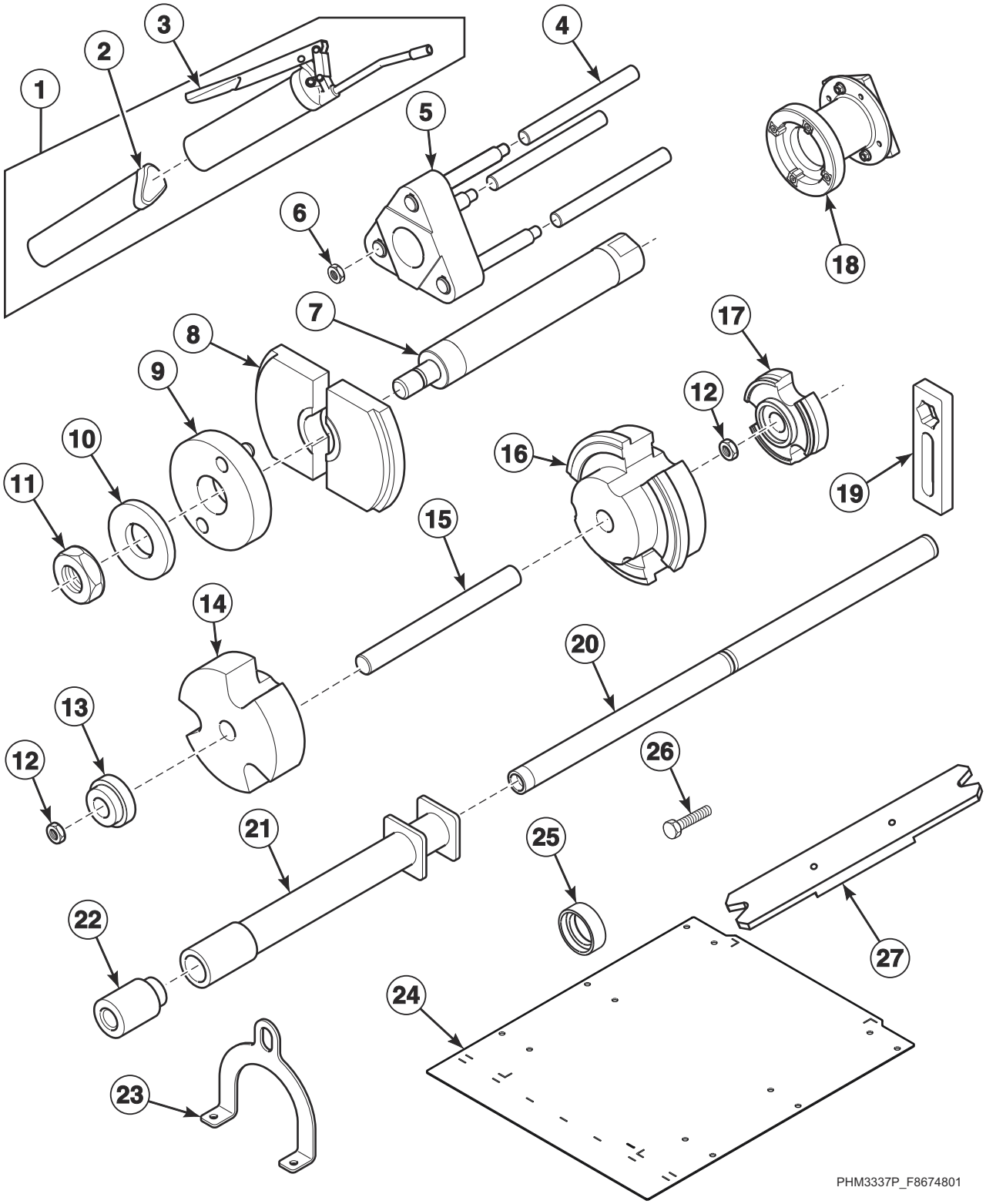

© Copyright, Alliance Laundry Systems LLC – DO NOT COPY or TRANSMIT

Special Tools and Kits

REF	PART NO.	DESCRIPTION	COMMENTS
	204454	Ferrite	EMI; HCK models
	1112P	Concrete Hardware Kit	
	203346	USB IR Interface Kit	
	F8599401	Bearing Seal Insertion and Removal Kit	Purchase; Includes items 4-21, 23, 25, 29, 70350503 Wing Nut and F8313702 Screw
	F8599401-1	Bearing Seal Insertion and Removal Kit	Rental; Includes items 4-21, 23, 25, 27, 70350503 Wing Nut and F8313702 Screw
1	F798700	Grease Gun Kit	Includes items 2 and 3
2	F210206P	Bearing Grease	
3	F210207P	Grease Gun	
4	F8599201	Rod	
5	F8560501	Shaft Support Assembly	
6	F8459101	Nut	
7	F8450401	Bearing Removal Shaft Assembly	
8	F8450601	Bearing Removal Plate	
9	F8455601	Bearing Removal Washer Assembly	
10	F8456101	Washer	
11	F8455801	Nut	
12	F8457701	Nut	
13	F8455701	Bearing Removal Plug	
14	F8515101	Bearing Seal Fixture	Front
15	F8452101	Threaded Rod	
16	F8515301	Seal Press Fixture	
17	F8515201	Bearing Seal Fixture	Rear
18	F8530201	Bearing Sleeve Assembly	
19	F8562801	One Sided Disassembly Fixture	
20	F8534101	Guide Rod Assembly	
21	F8490701	Hammer	
22	F8514401	Hammer Tool Adapter	
23	F8451501	Bearing Housing Lifting Fixture	
24	F8413101	Frame Template	
25	F8537502	Excluder Seal Fixture	
26	M400063	Screw	
27	F8634802	Clamp	

© Copyright, Alliance Laundry Systems LLC – DO NOT COPY or TRANSMIT

Notes

© Copyright, Alliance Laundry Systems LLC – DO NOT COPY or TRANSMIT

Parts Index

A

Access Cover
F8047801 61

Access Panel
F8552702 ..... 31, 33, 35, 37, 39, 41

Access Panel Retaining Spacer
F8609701 ..... 31, 33, 35, 37, 39, 41

Air Coupling
F422114 ..... 31, 33, 35, 37, 39, 41

App Pay Overlay Kit
44374701 ..... 9, 11, 15, 17, 19

Auxiliary Fill Hose
F8598801 61

B

Barbed Tee
203464 ..... 9, 11, 65

Basket
F8516901 53
F8516902 53
F8516904 53
F8517002 53
F8517004 53

Basket Assembly
F8516903 53
F8517001 53
F8517003 53

Bearing
F8280504 ..... 53, 57
F8375401 57

Bearing Grease
F210206P 69

Bearing Housing
F8744801R 57

Bearing Housing Assembly
F8474601 57
F8474602 57

Bearing Housing Lifting Fixture
F8451501 69

Bearing Removal Plate
F8450601 69

Bearing Removal Plug
F8455701 69

Bearing Removal Shaft Assembly
F8450401 69

Bearing Removal Washer Assembly
F8455601 69

Bearing Seal Fixture
F8515101 69
F8515201 69

Bearing Seal Insertion and Removal Kit
F8599401 69
F8599401-1 69

Bearing Sleeve Assembly
F8530201 69

Bearings and Seals Kit
F8503701 57
F8503801 57

Belt
F8382819 63
70276205P 63

Bolt
F430974 ..... 47, 49
F8270701 51
F8402801 63
F8508101 ..... 47, 49
M405503 63

C

Cabinet Brace
F8556901 43
F8556902 43

Card Plate Assembly
F8201501 11

Central Pay Harness
44342801 11

Central Pay Kit
F8673202 11
F8673204 11

Chemical Injection Control
804528 27

Circuit Breaker
70488101 ..... 23, 25, 65

Clamp
F8634802 69

Clip
F8566801 61

Coil
F8515001 67

Coin Drawer Assembly
F8182001 21

Coin Drop
CK097 15
38963P 15
70441601P 15
70441603 17

Coin Drop Assembly
201141 15
210195 17
210196 17
38462P 15
38463 15
38464P 15
38467 17
38475 15
38519 17
70281102 17
70283102 17
70441602 17
70447301 17
70471601 15
70482401 17
70506901 15

Coin Drop Kit
CK077 15
CK122 19
CK503 17

N/A items do not appear in index.

© Copyright, Alliance Laundry Systems LLC – DO NOT COPY or TRANSMIT

Coin Identification Paper
38725 ..... 15, 17, 19
Coin Meter
F0160737-00 17
Coin Vault Assembly
F8529101 9
Coin Vault Bypass Harness
F8519702 11
Coin Vault Harness
F8519701 9
Concrete Hardware Kit
1112P 69
Connector
F8555406 11
J1408004 57
70493102 27
Contactor
F330188P 65
70482601 ..... 23, 25
70482701 ..... 23, 25
Contactor Tray
F8530901 ..... 23, 25
Control Assembly
F8493901P 9, 11
Control Panel Assembly
F8552601 31
F8552604 37
F8697501 ..... 33, 35
F8697502 ..... 39, 41
Control Tray
F8530701 13
Coupling
F8116301 67
F8362701 67

D

Danger Label
F8614501 7
Diaphragm and Guide Kit
G582P3 61
Diaphragm Kit
F8739101 61
DIN Rail
B12315401 ..... 23, 25
M412689 ..... 23, 25
Dispenser
F8047403 61
Dispenser Bracket
F8525701 43
Dispenser Cover
F8563201 61
F8563203 61
Dispenser Gasket
B12568601 61
Dispenser Weldment
F8437902 61
Door
F8505001 47
F8508801 47
F8687102 49
F8687105 49
Door Assembly
F8505102 47
F8505105 47
F8505111 47
F8505112 47
F8698703 49
F8698704 49
F8698705 49
F8698706 49
Door Bezel
F170419-3 ..... 31, 33, 35
F8659301 ..... 37, 39, 41
Door Gasket
F8440801P 47
F8636501 ..... 47, 49
Door Glass
F8342001 47
F8342002 47
535439P 47, 49
Door Glass Gasket
F8499904 47
Door Glass Retainer
F8504902 47
F8504903 47
Door Glass Trim
F8583207 49
Door Handle
F8544701 ..... 47, 49
Door Handle Spacer Kit
F8567501 ..... 47, 49
Door Hinge
F190216P 47, 49
Door Hinge Shim Kit
F200131000P 47, 49
Door Latch Arm Assembly
F8221403 ..... 47, 49
Door Lock Assembly
F8632401 51
Door Lock Catch
F8344501 51
Door Lock Cover
F8245001 51
Door Lock Harness
F8520202 51
Door Lock Microswitch
F200203200 51
Door Lock Plate Assembly
F8223202 51
Door Lock Plate Shim
F83344401 51
Door Lock Solenoid Replacement Kit
F977P3 51
Door Lock Switch Lever
F8223401 51
Door Mount
F150271 ..... 47, 49
Double Check Valve
F8301201 61
Dowel Pin
F8406502 57
Drain Hose
F200165100 59
F8542001 59
F8542101 63

N/A items do not appear in index.

© Copyright, Alliance Laundry Systems LLC – DO NOT COPY or TRANSMIT

F8542201 59
Drain Valve
F8406308 59
Drain Valve Bracket
F8543601 59
Drain Valve Cover
F200133600 59
Drain Valve Harness
F8520002 59
Drain Valve Kit
F200166302 59
F200166402 59
F8577201 59
Drive Assembly
F8496601 29
F8496901 29
Drive Communication Harness
F8519201 29
F8519202 29
F8519203 29
F8519204 29
Drive Mounting Bracket
F8322401 29
Drive Panel Base Assembly
F8567001 23
F8567003 25
F8567004 ..... 23, 25
Drive Power Harness
F8518603 29
Drive Terminal Tray
F8530803 ..... 23, 25

E

Electric Heat Element Harness
F8584802 65
Electronic Coin Drop Assembly
CK100 19
70294107 19
70513303 19
70513304 19
70513306 19
70513309 19
70513310 19
70513311 19
70513312 19
70513313 19
70513314 19
70513315 19
70513316 19
Electronic Coin Drop Kit
CK099 19
CK100 19
CK101 19
CK108 19
CK109 19
CK110 19
CK113 19
CK115 19
CK116 19
CK117 19
CK118 19
CK119 19
CK120 19
CK121 19
CK500 19
Emergency Stop Bypass Harness
F8519403 11
F8549403 9
EMI Filter
F8591801 ..... 23, 25
F8637501 ..... 23, 25
End Stop
F8449801 ..... 23, 25
Excluder Seal
F8337101 53
F8527701 53
Excluder Seal Fixture
F8537502 69
Expansion Clip
70030501 ... 13, 23, 25, 29, 31, 33, 35, 37, 39, 41, 43, 45, ... 51, 57
Extension Spring
F8440701 63
External Supply Kit
F8662504 27
F8662508 27
Eye Bolt
F8319503 63

F

False Side Panel
F8557401 57
F8557402 57
Ferrite
204454 69
Fill Cover
F8586301 43
Fill Hose Kit
F8544601 61
Fill Valve Harness
F8520102 61
Filter Kit
F8662807 25
F8662808 23
F8662813 23
F8662814 25
Flanged Bushing
F8649401 63
Flanged Isolator
F8333302 63
F8535202 63
Frame Shield
F8509501 57
Frame Shield Extension
F8577901 57
F8577902 57
Frame Template
F8413101 69
Front Panel
F8552801 31
F8552802 37
F8552803 35
F8552804 41
F8685901 33
F8685902 39
F8685904 39

N/A items do not appear in index.

© Copyright, Alliance Laundry Systems LLC – DO NOT COPY or TRANSMIT

Front Tray Assembly
F8531001 ..... 9, 11
F8567303 9
F8567306 9
F8567309 11
F8567312 11

G

Gasket
F8542601 43
Gateway
205223P 13
205391P 13
Grease Fitting
F190701 ..... 31, 33, 35, 37, 39, 41
Grease Gun
F210207P 69
Grease Gun Kit
F798700 69
Ground Lug Connector
M411283 ..... 23, 25
Guide Rod Assembly
F8534101 69

H

Hammer
F8490701 69
Hammer Tool Adapter
F8514401 69
Harness
F8518401 23
F8518403 ..... 23, 25
F8518404 23
F8518501 25
F8518503 25
F8518504 25
F8518606 ..... 23, 25
F8519301 ..... 9, 11
F8519502 ..... 9, 11
F8519601 ..... 9, 11
F8520602 27
F8520704 67
F8528001 ..... 23, 25
F8528003 ..... 23, 25
F8528005 ..... 23, 25
F8528204 27
F8564001 65
F8564004 ..... 65, 67
F8598302 65
F8619102 ..... 23, 25
Heating Element
F8568301 65
Heating Element Plug
F360202 65
Hole Plug
F8223801 43
Hose
F8232012 61
F8245713 ..... 31, 33, 35, 37, 39, 41
Hose Clamp
F200201 ..... 59, 61
F200213 61
36801 61
36802 59
39282 ..... 9, 11, 65
Hose Fitting
44069101 61
Hot Surface Warning Label
F8609001 7
F8614301 7

I

Input and Output Control Assembly
F8494101P 13
Insertion Sleeve
F8464901 53
Insulation
F8233702 67
F8233704 67
Insulator
M413862 ..... 23, 25

J

Jumper
F8568901 65
F8583501 ..... 23, 25, 65

K

Key
F160420 21
H8752006H 63
44049002 63
70155603 43

L

Label
D516100 ..... 23, 25
F8601301 7
F8602401 7
F8609401 7
F8611301 7
F8611401 7
F8613501 ..... 31, 33, 35, 37, 39, 41
F8614801 7
F8620801 7
203853 7
44286803 ..... 23, 25

M

Machine ID Control Assembly
203361P 9, 11
Magnet
F8390801 ..... 47, 49
Manifold Valve
F8529701 61

N/A items do not appear in index.

© Copyright, Alliance Laundry Systems LLC – DO NOT COPY or TRANSMIT

F8529702P 61
Mixing Valve
70519801 61
70519802 61
Molded Drain
F8386807 59
Motor
F8510001 63
Motor Bracket Weldment
F8441805 63
Motor Harness
F8519005 63
F8519010 63
Motor Pulley
F8362601 63
F8362602 63
Motor Spring Bracket
F8342201 63
Mounting Plate
70208801 11

N

Nut
C001236 ..... 47, 49
F0431807-00 61
F430215 ..... 19, 47, 49
F430218 ..... 53, 55
F430232 ..... 47, 49, 51
F430248 57
F431024 51
F431041 ..... 47, 49
F8387601 63
F8455801 69
F8457701 69
F8459101 69
F8549401 47
44087201 ..... 57, 59, 63
44087301 63
44088001 ..... 23, 25
44088801 43
685846 ..... 9, 11, 15, 17
70030401 ..... 45, 59

O

One Sided Disassembly Fixture
F8562801 69
Opto Coupler
200674P 15, 17
O-Ring
F8569101 61
Overflow Hose
F0150488-00 59
Overlay
F8591401 35
F8591402 35
F8591403 41
F8591501 35
F8591502 35
F8591503 41
F8594301 ..... 31, 35
F8594302 ..... 31, 35
F8594303 ..... 37, 41
F8594401 ..... 31, 35
F8594402 ..... 31, 35
F8594403 ..... 37, 41
F8594802 35
F8594901 ..... 31, 35
F8594902 31
F8594903 ..... 37, 41
F8595001 ..... 31, 35
F8595002 ..... 31, 35
F8595003 ..... 37, 41
F8641601 31
F8641602 31
F8641603 37
F8641604 37
F8641605 31
F8692601 33
F8692602 33
F8692603 39
F8693101 33
F8693102 33
F8693103 39
F8693601 33
F8693602 33
F8693603 39
F8694101 33
F8694102 33
F8694103 39
F8694104 39
F8694105 33
F8727901 35
F8727902 35
F8727903 41
F8727905 ..... 35, 41
F8728001 35
F8728002 35
F8728003 41
F8728005 ..... 35, 41
70518101 37
70518102 37
70556501 37
70556502 37
70556601 31
70556801 31
70645601 ..... 33, 35
70645701 ..... 33, 35
70645801 ..... 33, 35
70645901 ..... 33, 35
70646001 ..... 39, 41
70646002 ..... 39, 41
70646101 ..... 39, 41
70646102 ..... 39, 41

P

Panel Locator
56079 ..... 31, 33, 35, 37, 39, 41, 45
Panel Lock
44089303P 43
Payment Center Kit
205069 11
205070 11
Pin
F8302701 53
F8502101 45
Pinch Warning Label
F8615701 7

N/A items do not appear in index.

© Copyright, Alliance Laundry Systems LLC – DO NOT COPY or TRANSMIT

70538401 7
Pipe Insulation
F410300 67
F8233708 67
Pipe Nipple
70214101 67
70435601 67
Plug
F0150502-00 59
F420408 ..... 65, 67
F8223901 43
M400985 43
M403052 57
Pop Rivet
F431215 ..... 31, 33, 35, 37, 39, 41, 43
F431223 ..... 47, 49
M400003 ..... 13, 23, 25
685847 43
70058501 ..... 9, 15, 17, 23, 25, 61
70412601 ..... 31, 33, 35, 37, 39, 41
Power Distribution Block
M413865 ..... 23, 25
Power Distribution Block Cover
44014901P 23, 25
Power Harness
F8619101 ..... 23, 25, 65
Pressure Cap
F8579301 59
Pressure Sensor
F8623401 ..... 9, 11, 65
P-Trap Hose
F8529605 61
Pulse Expander Assembly
F8034701P 19
Pushbutton Switch
70413301 43

R

Radial Lip Seal
F8528501 57
Radial Seal
F8203807 57
F8203808 57
Rear Panel
F8555301 43
Rear Vent Hose
F8616405 61
Reed Switch Assembly
F8066804 51
Rivet
M412763 ..... 31, 33, 35, 37, 39, 41, 45
70412601 43
Rod
F602813-2 ..... 47, 49
F8599201 69

S

Screw
D503688 29
F430532 ..... 47, 49
F430536 ..... 47, 49
F430900 55
F8117601 ..... 31, 33, 35, 37, 39, 41, 45, 51
F8206901 ..... 13, 23, 25, 43, 57
F8230301 61
F8313701 57
F8442702 55
F8535501 ..... 47, 49
F8535601 61
F8589501 ..... 31, 33, 35, 37, 39, 41
F8673701 53
M400063 69
M400077 63
202175 ..... 45, 59
33562 43
39733 ..... 23, 25
403497 27
430497 13
44048902 63
44079203 63
51783 ..... 23, 25
685837 ..... 23, 25
70321501 67
800461 63
800548 61
Seal
F8379301 53
Seal Press Fixture
F8515301 69
Seal Scupper Pad
F8452701 57
Seal Sleeve
F8343911 53
Seal Wear Plate
F8550101 55
Shaft Support Assembly
F8560501 69
Sheave Pulley
F8381801 63
Shell
F8543802 ..... 55, 65, 67
F8543803 55
F8543902 ..... 55, 65, 67
F8543903 55
Shell Band Kit
F8537808 53
Shell Front
F8222701 53
Shell Front Assembly
F8229801 53
Shell Insulation
F8209105 ..... 65, 67
Shock Warning Label
F8614201 7
Side Panel
F8553001 45
F8553002 45
F8553101 45
F8553102 45
Siphon Cover
F8047901 61
Sleeve Adapter
F8382501 53
Snap Bushing
F140938 ..... 9, 11, 23, 25, 27
M402542 ..... 9, 11

N/A items do not appear in index.

© Copyright, Alliance Laundry Systems LLC – DO NOT COPY or TRANSMIT

M411826 ..... 9, 11
70346501 ..... 23, 25
Spacer
F431901 51
Spring Pin
F431222 ..... 47, 49
Spring Stud Kit
F8748601 63
Steam Filter
F270307 67
Steam Hose
F200197 67
Steam Kit
F8662601 67
Street Elbow
H86070034 67
Stud
F8634701 63
70334702 ..... 57, 59
Supply Vacuum Hose
F8529405 61
F8529406 61

T

Temperature Probe Grommet
2251000400 ..... 55, 65
Terminal
00622SG 13, 23, 25
Terminal Block
430642 ..... 23, 25
Terminal Block Shield
70333001 ..... 23, 25
Terminal Tray Cover
F8518301 43
Thermistor
F8538801 ..... 55, 65
Threaded Rod
F8452101 69
Top Cover
F8553301 43
F8553302 43
Top Cover Hinge
F8258601 43
Top Cover Latch
F8201001 ..... 31, 33, 35, 37, 39, 41
Torsion/Door Lock Spring
F8070301 51
Transformer
F8491101 13
202758 13
Tubing
F8405302 ..... 9, 11
F8405303 ..... 9, 11

U

USB IR Interface Kit
203346 69

V

Vacuum Breaker Assembly
F8517501 61
F8517502 61
F8517503 61
F8517504 61
Vacuum Breaker Guard
F8589601 61
Valve
F8322805 67
F8565201 61
F8565202 61
Valve Panel
F8553401 43
Valve Rebuild Kit
F8379505 67

W

Warning Label
F8611601 7
44324001 7
Washer
F431133 ..... 47, 49
F431147 ..... 47, 49
F431916 ..... 47, 49
F431929 ..... 47, 49
F8171201 57
F8193101 51
F8201101 ..... 31, 33, 35, 37, 39, 41
F8366601 63
F8402701 55
F8456101 69
M400013 63
M400080 ..... 53, 57
M400081 55
M405535 45
70292801 ..... 31, 33, 35, 37, 39, 41
804501 43
Water Hose
F200164 61
F200166 61
Water Level Pressure Switch
F8609101 ..... 9, 11, 65
Water Reuse Hose
C000412 59
Wire Clip
F8449501 ..... 9, 11, 13
70347601 13
70366201 ..... 9, 11
Wire Label
44286804 23
Wireless Harness
F8520404 13
F8674004 13
Wireless Kit
F8662402 13
F8676101 13
Wireless Network Control Assembly
203532 13
807211 13

N/A items do not appear in index.

© Copyright, Alliance Laundry Systems LLC – DO NOT COPY or TRANSMIT

Y

Y-Connector
223/00243/00 61

N/A items do not appear in index.

© Copyright, Alliance Laundry Systems LLC – DO NOT COPY or TRANSMIT