WASCOMAT

# Spare Parts Catalogue

# Catalogue de pièces de rechange

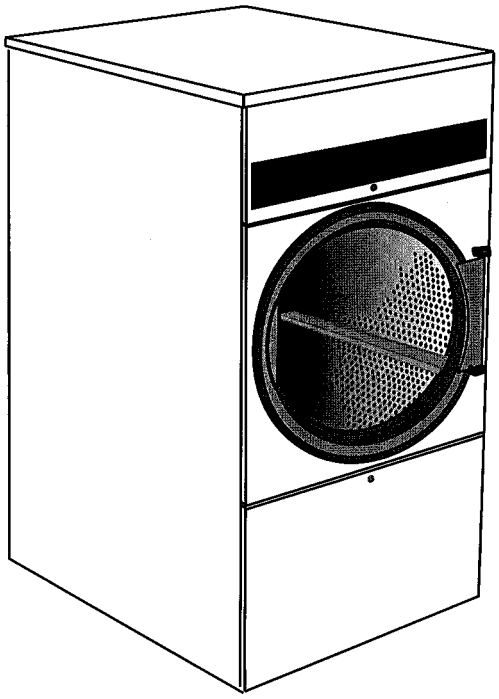

## TD75

DOC. NO. **438 9020-29**
EDITION 49.2004

Group
Groupe

# List of issues

**US72**

## TD75

| Illustration | Page | Table of contents |
|---|---|---|
| 101290 | 59 | Heating unit, steam |
| 101516 | 49 | Heating unit, electric |
| 101550 | 65 | Control unit, gas |
| 101555 | 55 | Heating unit, gas |
| 101570 | 7 | Cabinet |
| 101571 | 15 | Door |
| 101573 | 29 | Drum, compl. |
| 101574 | 33 | Motor alternative |
| 101579 | 21 | Control panel, manual |
| 101580 | 25 | Control panel with coin |
| 101596 | 63 | Control unit, electric |
| 101597 | 69 | Control unit, steam |
| 101598 | 43 | Connection unit |
| 102051 | 45 | Connection unit |
| 102052 | 9 | Cabinet |
| 102053 | 17 | Door |
| 102054 | 19 | Filter hatch complete |
| 102055 | 31 | Drum with moisture sensor |
| 102074 | 71 | Control unit, steam |
| 102075 | 67 | Control unit, gas |
| 200018 | 37 | Motor alternative |
| 200070 | 73 | Control unit, Basic3 |
| 200074 | 41 | Motor alternative |
| 200103 | 13 | Cabinet |
| 200104 | 23 | Control panel, manual, Basic 3 |
| 200105 | 27 | Control panel, with coin, Basic 3 |
| 200106 | 61 | Heating unit, steam |
| 200107 | 47 | Connection unit |
| 200108 | 53 | Heating unit, electric |
| 200109 | 57 | Heating unit, gas |
| 200158 | 51 | Heating unit, electric |

## TD75

Table of contents


| | | |
|---|---|---|
| Cabinet | Armoire | 7 |
| Cabinet | Armoire | 9 |
| Cabinet | Armoire | 13 |
| Door | Plaque | 15 |
| Door | Plaque | 17 |
| Filter hatch complete | Plaque filtre complète | 19 |
| Control panel, manual | Pupitre de commande, manuel | 21 |
| Control panel, manual, Basic 3 | Panneau de commande manuel, Basic 3 | 23 |
| Control panel with coin | Pupitre de commande, monnayeur | 25 |
| Control panel, with coin, Basic 3 | Panneau de commande monnayeur, Basic 3 | 27 |
| Drum, compl. | Tambour, complet | 29 |
| Drum with moisture sensor | Tambour avec capteur humidité | 31 |
| Motor alternative | Alternative moteur | 33 |
| Motor alternative | Alternative moteur | 37 |
| Motor alternative | Alternative moteur | 41 |
| Connection unit | Connexion | 43 |
| Connection unit | Connexion | 45 |
| Connection unit | Connexion | 47 |
| Heating unit, electric | Unité de chauffage, électrique | 49 |
| Heating unit, electric | Unité de chauffage, électrique | 51 |
| Heating unit, electric | Unité de chauffage, électrique | 53 |
| Heating unit, gas | Unité de chauffage, gaz | 55 |
| Heating unit, gas | Unité de chauffage, gaz | 57 |
| Heating unit, steam | Unité de chauffage, vapeur | 59 |
| Heating unit, steam | Unité de chauffage, vapeur | 61 |
| Control unit, electric | Unité de contrôle, électrique | 63 |
| Control unit, gas | Unite de contrôle, gaz | 65 |
| Control unit, gas | Unite de contrôle, gaz | 67 |
| Control unit, steam | Unite de contrôle, vapeur | 69 |
| Control unit, steam | Unite de contrôle, vapeur | 71 |
| Control unit, Basic3 | Unité de contrôle, Basic3 | 73 |

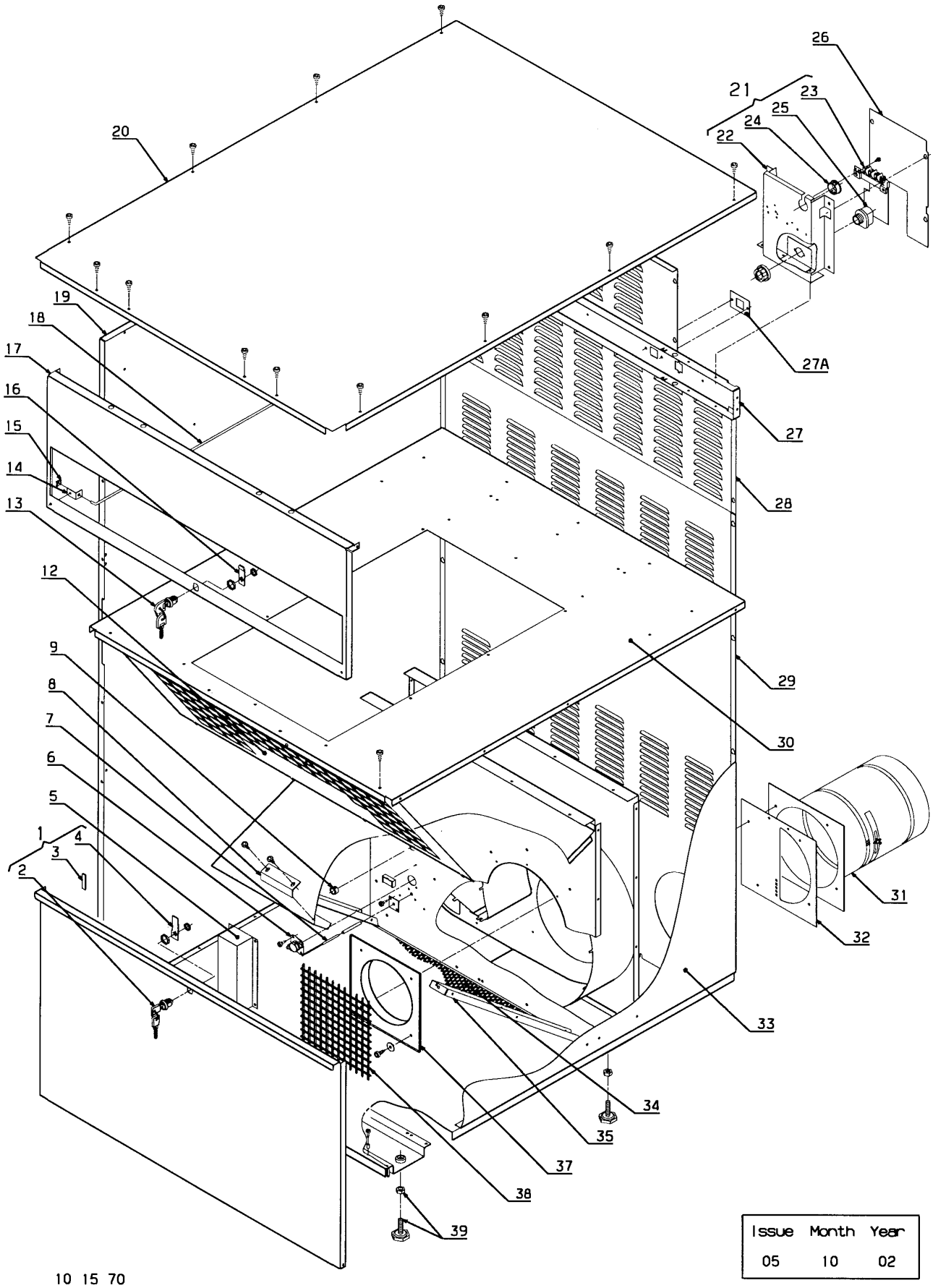


| Issue | Month | Year |
|---|---|---|
| 05 | 10 | 02 |

Tegn. 487 18 96 30

10 15 70

**TD75 -0009/1733**

**Cabinet**

**Armoire**

| Illustration / Schéma | Issue / Issue | Month / Month | Year / Year |
|---|---|---|---|
| **101570/4** | **8** | **11** | **2003** |

| Item / Article | Qua / Qua | Art.No / Réf. article | Description | Description | Info / Info | Notes / Remarques |
|---|---|---|---|---|---|---|
| **1** | 1 | **487 1818-15** | Filter hatch complete | Plaque filtre complète | 3 | White |
| **2** | 1 | **487 1946-53** | •Lock | •Serrure | 3 | Complete |
| | 1 | **487 1707-12** | ••Key | ••Clé | 3 | |
| **3** | 2 | **487 1959-10** | •Sealing strip | •Bande d'étanchéité | 1 | |
| **4** | 1 | **487 1756-25** | •Lock catch | •Verrou | 3 | |
| **5** | 1 | **487 1820-17** | Cover | Couvercle | 3 | |
| **6** | 1 | **487 1697-04** | Thermostat | Thermostat | 1,2 | |
| **7** | 1 | **487 1934-71** | Thermistor element | Élément thermistor | 1,2 | Complete |
| **8** | 1 | **472 5537-08** | Bracket | Support | 3 | White |
| **9** | 1 | **762 1137-10** | Cable gland | Passe-fil | 3 | Ø28 |
| **10** | | | | | | Not used |
| **11** | | | | | | Not used |
| **12** | 1 | **487 1820-59** | Finger protection | Protection pour les doigts | 3 | |
| **13** | 1 | **487 1946-52** | Lock | Serrure | 3 | Complete |
| | 1 | **487 1707-11** | •Key | •Clé | 3 | |
| **14** | 1 | **487 1763-06** | Angle | Coude | 3 | |
| **15** | 1 | **487 1626-04** | Disc | Disque | 3 | Grifax |
| **16** | 1 | **487 1756-30** | Lock catch | Verrou | 3 | |
| **17** | 1 | **487 1946-05** | Front panel | Panneau de façade | 3 | White |
| **18** | 1 | **487 1763-05** | Bracket | Support | 3 | |
| **19** | 1 | **487 1828-05** | Side plate | Plaque de côté | 3 | White |
| **20** | 1 | **487 1814-05** | Top panel | Panneau supérieur | 3 | White |
| | 1 | **487 1814-50** | Top panel | Panneau supérieur | 3 | Stainless |
| **21** | 1 | **487 1973-35** | Connecting box | Boîte de raccordement | 3 | Complete Gas + steam |
| **22** | 1 | **487 1897-56** | •Connecting box | •Boîte de raccordement | 3 | |
| **23** | 1 | **489 7194-20** | •Terminal block | •Borne de raccordement | 3 | |
| **24** | 1 | **762 1191-10** | •Cable gland | •Passe-fil | 3 | Ø280 |
| **25** | 1 | **471 8752-04** | •Cable gland | •Passe-fil | 3 | PG16 |
| **26** | 1 | **487 1897-58** | Cover | Couvercle | 3 | |
| **27** | 1 | **487 1695-62** | Beam | Poutre | 3 | El |
| | 1 | **487 1695-67** | Beam | Poutre | 3 | Gas |
| | 1 | **487 1831-63** | Beam | Poutre | 3 | Steam |
| **27A** | 1 | **487 0127-71** | Plate | Plaque | 3 | 3/4" |
| **28** | 1 | **487 1897-54** | Baffle plate | Plaque d'écran | 3 | |
| **29** | 1 | **487 2219-16** | Baffle plate | Plaque d'écran | 3 | |
| **30** | 1 | **487 1820-84** | Top panel | Panneau supérieur | 3 | |
| **31** | 1 | **487 1775-20** | Adjustable vent pipe | Tube réglable d'évacuation de l'air | 3 | |
| **32** | 1 | **487 1764-35** | Air reducing plate | Tôle de réduction | 3 | |
| **33** | 1 | **487 1827-05** | Side plate | Plaque de côté | 3 | White |
| **34** | 1 | **487 1695-15** | Lint screen | Écran en coton | 1 | |
| **35** | 2 | **487 1694-64** | Leg | Pied | 3 | |
| **36** | | | | | | Not used |
| **37** | 1 | **487 1831-41** | Venturi | Venturi | 3 | |
| **38** | 1 | **487 1831-42** | Net | Filet | 3 | |
| **39** | 4 | **487 1694-68** | Foot | Pied | 3 | M10X44 |

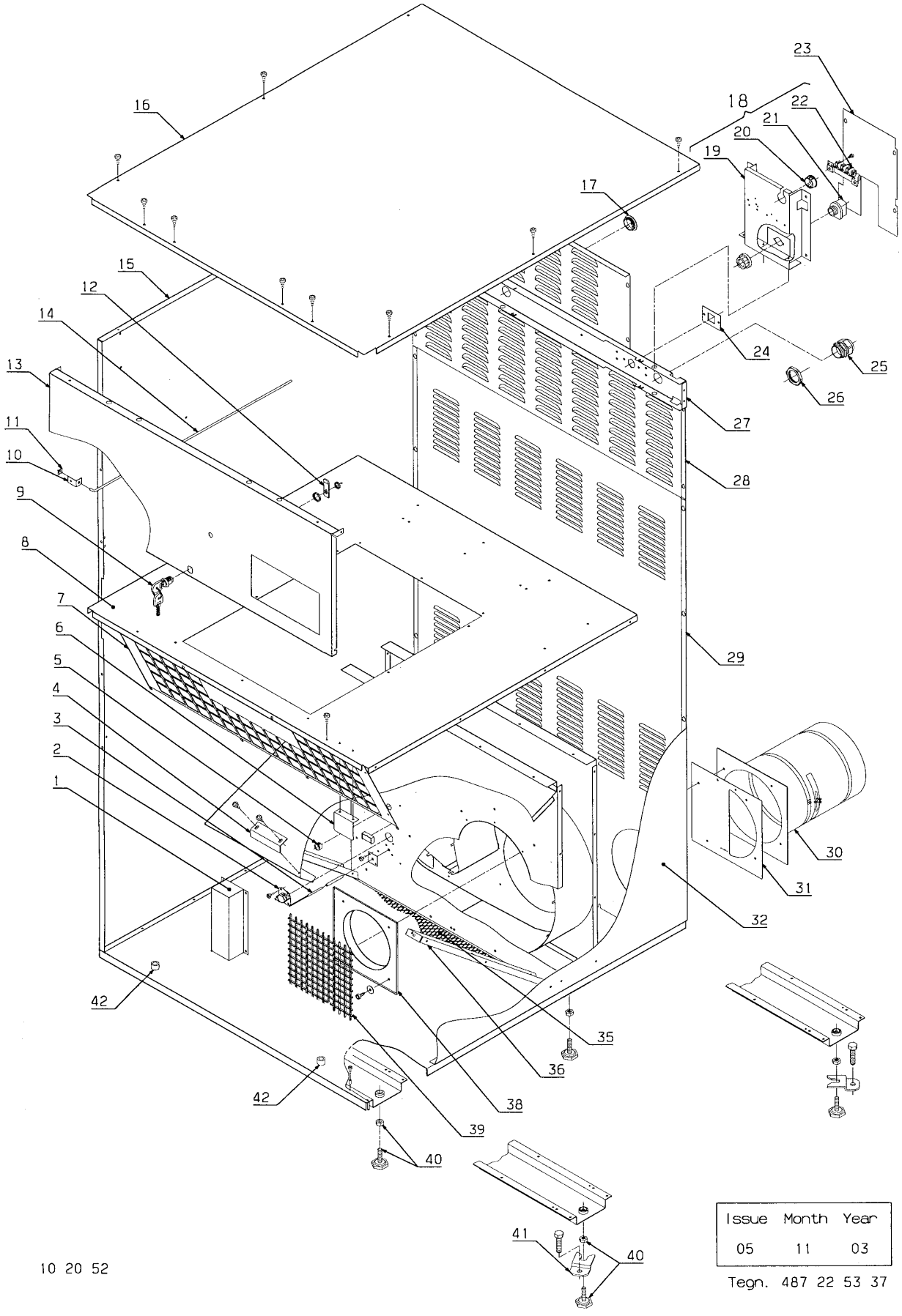


| Issue | Month | Year |
|---|---|---|
| 05 | 11 | 03 |

Tegn. 487 22 53 37

10 20 52

**TD75 0009/1734-20750/6061**

**Cabinet**

**Armoire**

| Illustration | Issue | Month | Year |
|---|---|---|---|
| Schéma | Issue | Month | Year |
| **102052/4** | **7** | **11** | **2003** |

| Item<br>Article | Qua<br>Qua | Art.No<br>Réf. article | Description | Description | Info<br>Info | Notes<br>Remarques |
|---|---|---|---|---|---|---|
| **1** | 1 | **487 1820-17** | Cover | Couvercle | 3 | |
| **2** | 1 | **487 1697-04** | Thermostat | Thermostat | 1,2 | |
| **3** | 1 | **487 1934-71** | Thermistor element | Élément thermistor | 1,2 | Complete |
| **4** | 1 | **472 5537-08** | Bracket | Support | 3 | White |
| **5** | 1 | **762 1137-10** | Cable gland | Passe-fil | 3 | Ø28 |
| **6** | 2 | **487 1816-57** | Magnet retainer | Support d'aimant | 3 | |
| **7** | 1 | **487 1813-15** | Finger protection | Protection pour les doigts | 3 | White |
| **8** | 1 | **487 1820-84** | Top panel | Panneau supérieur | 3 | |
| **9** | 1 | **487 1946-52** | Lock | Serrure | 3 | Complete |
| | 1 | **487 1707-11** | •Key | •Clé | 3 | |
| **10** | 1 | **487 1763-06** | Angle | Coude | 3 | |
| **11** | 1 | **487 1626-04** | Disc | Disque | 3 | Grifax |
| **12** | 1 | **487 1756-30** | Lock catch | Verrou | 3 | |
| **13** | 1 | **487 2218-05** | Front panel | Panneau de façade | 3 | White -0206/0004021 |
| | 1 | **487 2218-55** | Front panel | Panneau de façade | 3 | Stainless -0206/0004021 |
| | 1 | **487 2218-73** | Front panel | Panneau de façade | 3 | Beige -0206/0004021 |
| | 1 | **487 1504-05** | Front panel | Panneau de façade | 3 | White 0206/0004022- |
| | 1 | **487 1504-41** | Front panel | Panneau de façade | 3 | Green 0206/0004022- |
| | 1 | **487 1504-55** | Front panel | Panneau de façade | 3 | Stainless 0206/0004022- |
| | 1 | **487 1504-63** | Front panel | Panneau de façade | 3 | Beige 0206/0004022- |
| **14** | 1 | **487 1763-05** | Bracket | Support | 3 | |
| **15** | 1 | **487 2221-05** | Side plate | Plaque de côté | 3 | White Left |
| | 1 | **487 2221-40** | Side plate | Plaque de côté | 3 | Grey Left |
| | 1 | **487 2221-55** | Side plate | Plaque de côté | 3 | Stainless Left |
| **16** | 1 | **487 2229-05** | Top panel | Panneau supérieur | 3 | White |
| | 1 | **487 2229-40** | Top panel | Panneau supérieur | 3 | Grey |
| | 1 | **487 2229-55** | Top panel | Panneau supérieur | 3 | Stainless |
| **17** | RQ | **487 1701-41** | Plug | Bouchon | 3 | White |
| **18** | 1 | **487 1973-35** | Connecting box | Boîte de raccordement | 3 | Complete Gas + steam |
| **19** | 1 | **487 1897-56** | •Connecting box | •Boîte de raccordement | 3 | |
| **20** | 1 | **762 1191-10** | •Cable gland | •Passe-fil | 3 | Ø280 |
| **21** | 1 | **471 8752-04** | •Cable gland | •Passe-fil | | PG16 |
| **22** | 1 | **489 7194-20** | •Terminal block | •Borne de raccordement | 3 | |
| **23** | 1 | **487 1897-58** | Cover | Couvercle | 3 | |
| **24** | 1 | **487 0127-71** | Plate | Plaque | 3 | 3/4" |
| **25** | 1 | **487 2217-29** | Cable gland | Passe-fil | 3 | PG42 El |
| | 1 | **471 8752-04** | Cable gland | Passe-fil | 3 | PG16 Gas + steam |
| **26** | 1 | **487 2217-28** | Nut | Écrou | 3 | PG42 El |
| **27** | 1 | **487 2219-23** | Beam | Poutre | 3 | El |
| | 1 | **487 2219-22** | Beam | Poutre | 3 | Gas |
| | 1 | **487 1831-63** | Beam | Poutre | 3 | Steam |
| **28** | 1 | **487 0001-06** | Baffle plate | Plaque d'écran | 3 | El |
| | 1 | **487 0001-07** | Baffle plate | Plaque d'écran | 3 | Gas |
| | 1 | **487 0001-12** | Baffle plate | Plaque d'écran | 3 | Steam |
| **29** | 1 | **487 2219-16** | Baffle plate | Plaque d'écran | 3 | |
| **30** | 1 | **487 1775-20** | Adjustable vent pipe | Tube réglable d'évacuation de l'air | 3 | |
| **31** | 1 | **487 1764-35** | Air reducing plate | Tôle de réduction | 3 | |
| **32** | 1 | **487 2222-05** | Side plate | Plaque de côté | 3 | White Right |
| | 1 | **487 2222-40** | Side plate | Plaque de côté | 3 | Grey Right |
| | 1 | **487 2222-55** | Side plate | Plaque de côté | 3 | Stainless Right |
| **33** | | | | | | Not used |
| **34** | | | | | | Not used |
| **35** | 1 | **487 1695-15** | Lint screen | Écran en coton | 1 | |
| **36** | 2 | **487 1694-64** | Leg | Pied | 3 | |
| **37** | | | | | | Not used |
| **38** | 1 | **487 1831-41** | Venturi | Venturi | 3 | |
| **39** | 1 | **487 1831-42** | Net | Filet | 3 | |
| **40** | 4 | **487 1694-68** | Foot | Pied | 3 | M10X44 |

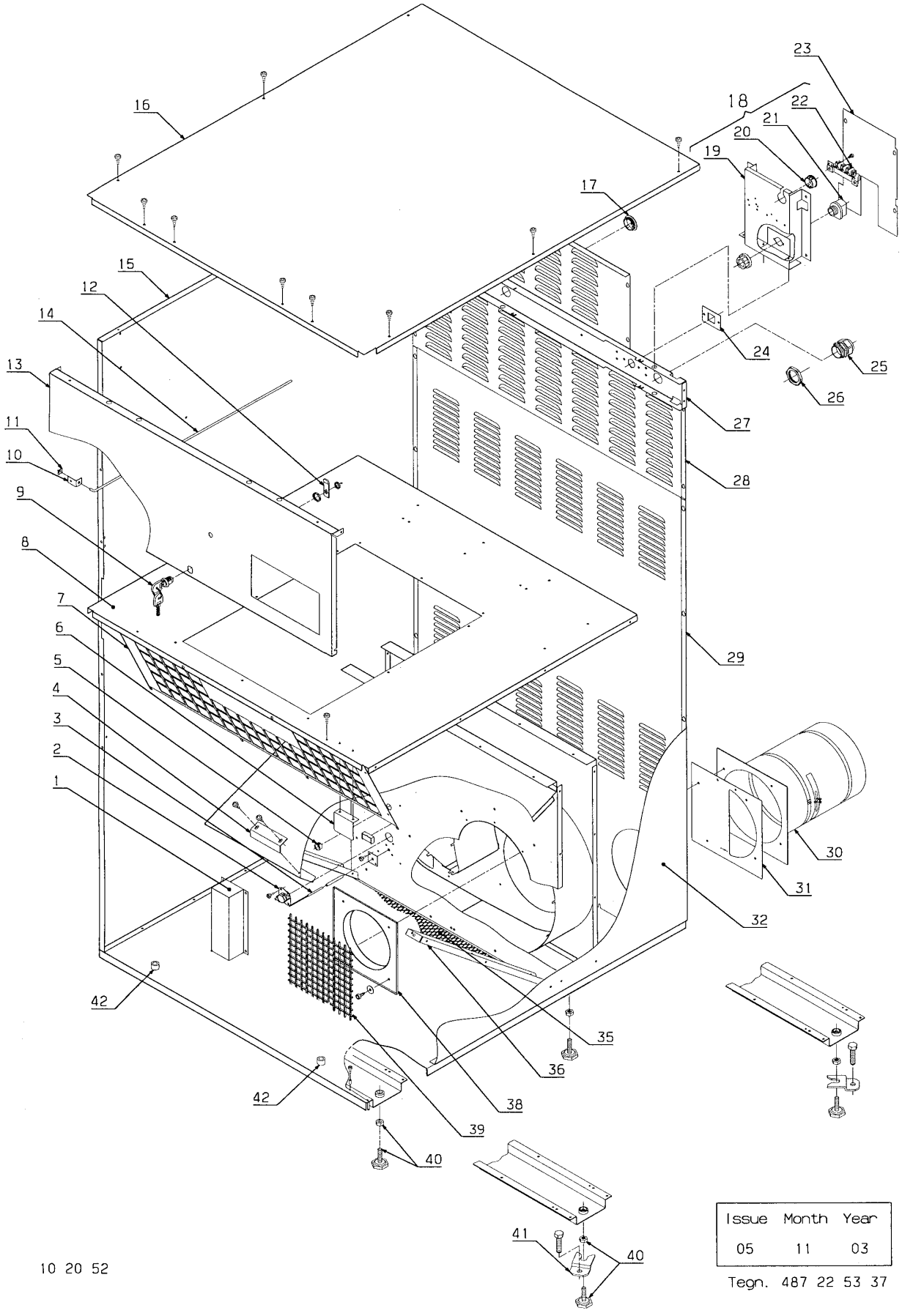


| Issue | Month | Year |
|---|---|---|
| 05 | 11 | 03 |

Tegn. 487 22 53 37

10 20 52

**TD75 0009/1734-20750/6061**

**Cabinet**

**Armoire**

| Illustration | Issue | Month | Year |
|---|---|---|---|
| Schéma | Issue | Month | Year |
| **102052/4** | **7** | **11** | **2003** |

| Item<br>Article | Qua<br>Qua | Art.No<br>Réf. article | Description | Description | Info<br>Info | Notes<br>Remarques |
|---|---|---|---|---|---|---|
| **41** | 4 | **472 7777-01** | Fitting | Garniture | 3 | Complete |
| **42** | 2 | **472 7414-01** | Spacer sleeve | Manchon entretoise | 3 | Ø10/Ø6 |

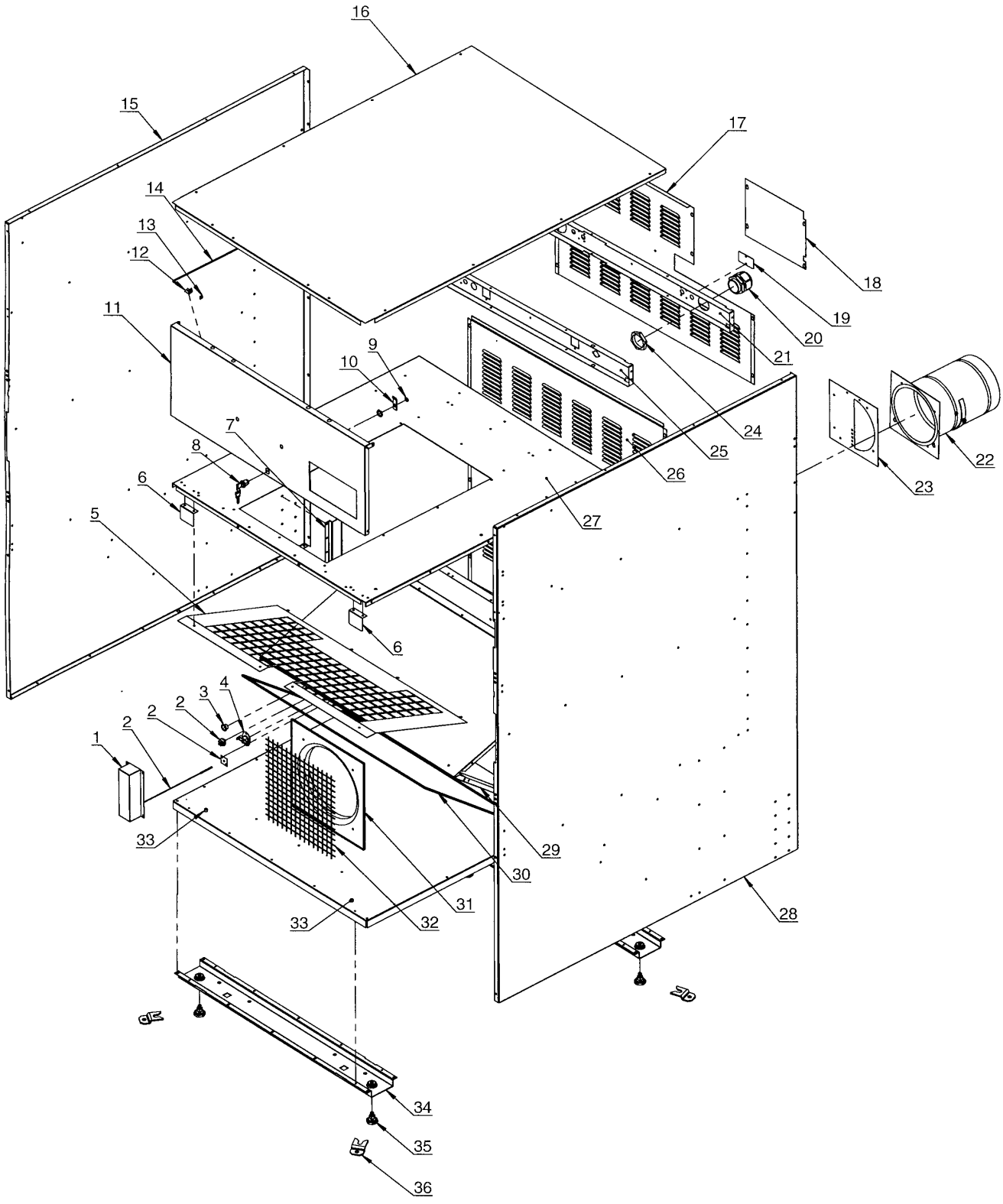


| Issue | Month | Year |
|---|---|---|
| 01 | 11 | 03 |

20 01 03

Tegn. 487 22 54 44

**TD75 20750/6062-**

**Cabinet**

**Armoire**

| Illustration | Issue | Month | Year |
|---|---|---|---|
| Schéma | Issue | Month | Year |
| **200103/1** | **2** | **11** | **2004** |

| Item<br>Article | Qua<br>Qua | Art.No<br>Réf. article | Description | Description | Info<br>Info | Notes<br>Remarques |
|---|---|---|---|---|---|---|
| **1** | 1 | **487 1820-17** | Cover | Couvercle | 3 | |
| **2** | 1 | **487 1934-71** | Thermistor element | Élément thermistor | 1,2 | Complete |
| **3** | 2 | **762 1137-10** | Cable gland | Passe-fil | 3 | Ø28 |
| **4** | 1 | **487 0274-18** | Thermostat | Thermostat | 1,2 | 87ºC |
| **5** | 1 | **487 1813-15** | Finger protection | Protection pour les doigts | 3 | White |
| **6** | 2 | **487 1816-57** | Magnet retainer | Support d'aimant | 3 | |
| **7** | 2 | **487 1897-60** | Rail | Rail | 3 | |
| **8** | 1 | **487 1946-52** | Lock | Serrure | 3 | Complete |
| | 1 | **487 1707-11** | •Key | •Clé | 3 | |
| **9** | 1 | **487 1875-00** | •Lock washer | •Rondelle d'arrêt | 3 | |
| **10** | 1 | **487 1756-30** | Lock catch | Verrou | 3 | |
| **11** | 1 | **487 2368-99** | Front panel | Panneau de façade | | See illustr. 200104, 200105 |
| **12** | 1 | **487 1763-06** | Angle | Coude | 3 | |
| **13** | 1 | **487 1626-04** | Disc | Disque | 3 | Grifax |
| **14** | 1 | **487 1763-05** | Bracket | Support | 3 | |
| **15** | 1 | **487 2221-05** | Side plate | Plaque de côté | 3 | White Left |
| | 1 | **487 2221-40** | Side plate | Plaque de côté | 3 | Grey Left |
| | 1 | **487 2221-55** | Side plate | Plaque de côté | 3 | Stainless Left |
| **16** | 1 | **487 2229-05** | Top panel | Panneau supérieur | 3 | White |
| | 1 | **487 2229-40** | Top panel | Panneau supérieur | 3 | Grey |
| | 1 | **487 2229-55** | Top panel | Panneau supérieur | 3 | Stainless |
| **17** | 1 | **487 2368-20** | Baffle plate | Plaque d'écran | 3 | Electric + gas |
| | 1 | **487 2368-21** | Baffle plate | Plaque d'écran | | Steam See illustr. 200106 |
| **18** | 1 | **487 2368-25** | Cover | Couvercle | 3 | Electric + gas |
| | 1 | **487 2368-28** | Cover | Couvercle | | Without switch See illustr. 200106 |
| **19** | 1 | **487 2368-33** | Cover plate | Plaque recouvrement | 3 | |
| **20** | 1 | **487 0289-05** | Cable glands | Support de câble | 3 | M63 208-240V |
| | 1 | **487 0289-04** | Cable glands | Support de câble | 3 | M50 400-480V |
| **21** | 1 | **487 2368-30** | Beam | Poutre | 3 | EI |
| | 1 | **487 2368-04** | Beam | Poutre | | Steam See illustr. 200106 |
| **22** | 1 | **487 1775-20** | Adjustable vent pipe | Tube réglable d'évacuation de l'air | 3 | |
| **23** | 1 | **487 1764-35** | Air reducing plate | Tôle de réduction | 3 | |
| **24** | 1 | **487 0289-13** | Lock-nut | Contre-écrou | 3 | M63 |
| | 1 | **487 0289-12** | Lock-nut | Contre-écrou | 3 | M50 |
| **25** | 1 | **487 2368-03** | Beam | Poutre | 3 | Gas |
| **26** | 1 | **487 2219-16** | Baffle plate | Plaque d'écran | 3 | |
| **27** | 1 | **487 1820-84** | Top panel | Panneau supérieur | 3 | |
| **28** | 1 | **487 2222-05** | Side plate | Plaque de côté | 3 | White Right |
| | 1 | **487 2222-40** | Side plate | Plaque de côté | 3 | Grey Right |
| | 1 | **487 2222-55** | Side plate | Plaque de côté | 3 | Stainless Right |
| **29** | 2 | **487 1694-64** | Leg | Pied | 3 | |
| **30** | 1 | **487 1695-15** | Lint screen | Écran en coton | 3 | |
| **31** | 1 | **487 1831-41** | Venturi | Venturi | 3 | |
| **32** | 1 | **487 1831-42** | Net | Filet | 3 | |
| **33** | 2 | **472 7414-01** | Spacer sleeve | Manchon entretoise | 3 | Ø10/Ø6 |
| **34** | 2 | **487 1695-79** | Beam | Poutre | 3 | |
| * **35** | 4 | **487 1694-68** | Foot | Pied | 3 | M10X44 -20750/7004 |
| * | 4 | **487 1512-30** | Foot | Pied | 3 | M10X80 20750/7005- |
| **36** | 4 | **472 7777-01** | Fitting | Garniture | 3 | Complete |

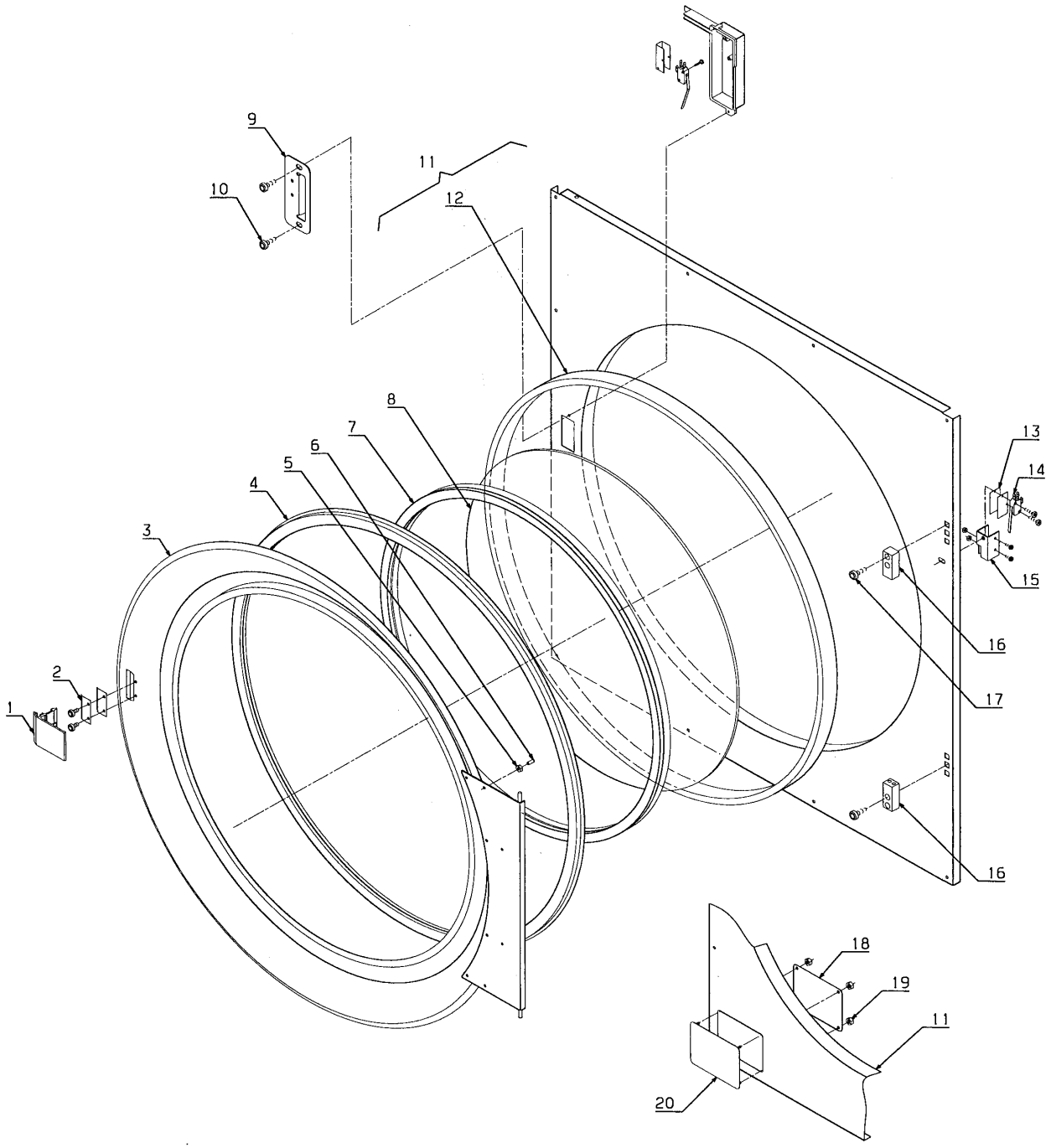


| Issue | Month | Year |
|---|---|---|
| 05 | 06 | 04 |

Tegn. 487 18 96 31

10 15 71

**TD75 -0009/1733**

**Door**

**Plaque**

| Illustration | Issue | Month | Year |
|---|---|---|---|
| Schéma | Issue | Month | Year |
| **101571/3** | **10** | **9** | **2004** |

| Item<br>Article | Qua<br>Qua | Art.No<br>Réf. article | Description | Description | Info<br>Info | Notes<br>Remarques |
|---|---|---|---|---|---|---|
| **1** | 1 | **487 1820-97** | Door handle | Poignée de la porte | 3 | |
| **2** | 2 | **472 7310-01** | Locking spring | Ressort verrouillage | 3 | |
| **3** | 1 | **487 1975-16** | Revesible door | Porte réversible | 3 | Complete |
| **4** | 1 | **472 7408-04** | Door gasket | Joint de la porte | 1 | |
| **5** | 1 | **731 5312-01** | Nut | Écrou | | M4 |
| **6** | 1 | **487 1756-35** | Bushing | Douille | 3 | |
| **7** | 1 | **487 1763-54** | Gasket for glass | Joint d'étanchéité de la vitre | 1 | |
| **8** | 1 | **487 1763-15** | Door glass | Vitre de la porte | 3 | |
| **9** | 1 | **472 7378-08** | Plate | Plaque | 3 | Graphitegrey |
| **10** | 2 | **488 0386-13** | Screw | Vis | 3 | M5X12 |
| * **11** | 1 | **487 0215-56** | Revesible front | Façade réversible | 3 | White Manual |
| * | 1 | **487 0215-58** | Revesible front | Façade réversible | 3 | Stainless Manual |
| * | 1 | **487 0215-63** | Revesible front | Façade réversible | 3 | White With coin |
| * | 1 | **487 0215-65** | Revesible front | Façade réversible | 3 | Stainless With coin |
| **12** | 1 | **487 1935-32** | •Seal | •Etanchéité | 1 | Complete |
| **13** | 2 | **471 2068-48** | Insulation | Isolation | 3 | |
| **14** | 1 | **487 1898-10** | Microswitch | Microrupteur | 1,2 | |
| **15** | 1 | **487 1756-45** | Fitting | Garniture | 3 | Right |
| | 1 | **487 1756-51** | Fitting | Garniture | 3 | Left |
| * **16** | 2 | **487 0215-71** | Hinge | Charnière | 3 | Complete |
| **17** | 4 | **724 1333-01** | •Screw | •Vis | 3 | M5X25 |
| **18** | 1 | **487 1831-48** | Rear panel | Plaque arrière | 3 | |
| **19** | 4 | **732 2112-01** | Locking nut | Contre-écrou | | M4 |
| **20** | 1 | **487 1875-05** | Cover plate | Plaque recouvrement | 3 | White |

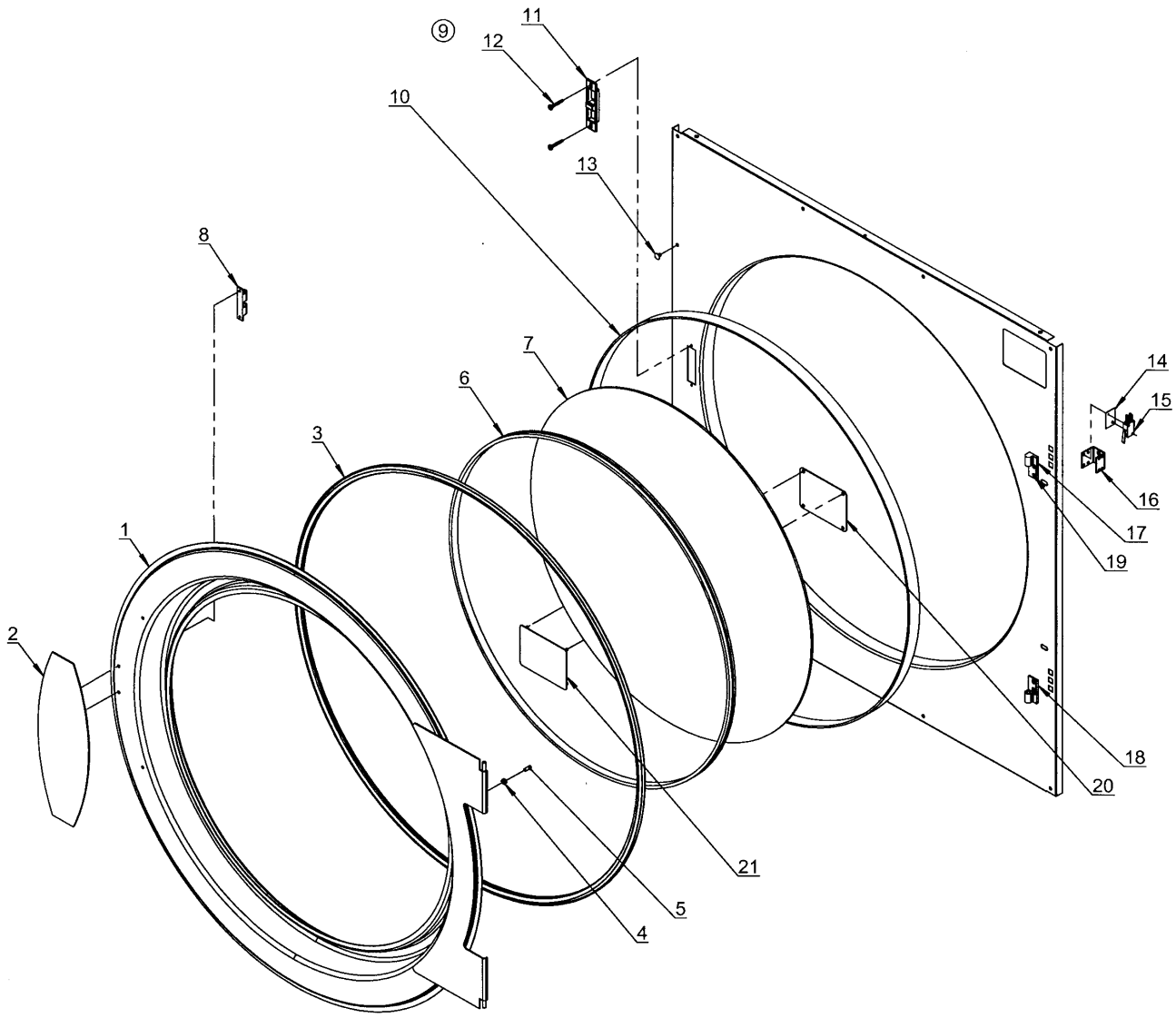


| Issue | Month | Year |
|---|---|---|
| 05 | 06 | 04 |

10 20 53

Tegn. 487 22 53 38

**TD75 0009/1734-**

**Door**

**Plaque**

| Illustration | Issue | Month | Year |
|---|---|---|---|
| Schéma | Issue | Month | Year |
| **102053/5** | **8** | **9** | **2004** |

| Item<br>Article | Qua<br>Qua | Art.No<br>Réf. article | Description | Description | Info<br>Info | Notes<br>Remarques |
|---|---|---|---|---|---|---|
| **1** | 1 | **487 1975-96** | Revesible door, complete | Porte réversible, complet | 3 | Silvergrey |
| **2** | 1 | **487 1813-43** | Handle | Manivelle | 3 | Silvergrey |
| **3** | 1 | **487 2219-31** | Door gasket | Joint de la porte | 1 | |
| **4** | 1 | **731 5312-01** | Nut | Écrou | | M4 |
| **5** | 1 | **487 1756-35** | Bushing | Douille | 3 | |
| **6** | 1 | **487 1763-54** | Gasket for glass | Joint d'étanchéité de la vitre | 1 | |
| **7** | 1 | **487 1763-15** | Door glass | Vitre de la porte | 3 | |
| * **8** | 1 | **487 0215-73** | Snap catch | Cliquet | 3 | Complete |
| **9** | 1 | **487 1975-82** | Revesible front, manual | Façade réversible, manuel | 3 | Complete White |
| | 1 | **487 1975-84** | Revesible front, manual | Façade réversible, manuel | 3 | Complete Green |
| | 1 | **487 1975-85** | Revesible front, manual | Façade réversible, manuel | 3 | Complete Stainless |
| | 1 | **487 1975-87** | Revesible front, manual | Façade réversible, manuel | 3 | Complete Beige |
| | 1 | **487 1975-89** | Revesible front with coin | Façade réversible, monnaieur | 3 | Complete White |
| | 1 | **487 1975-91** | Revesible front with coin | Façade réversible, monnaieur | 3 | Complete Green |
| | 1 | **487 1975-92** | Revesible front with coin | Façade réversible, monnaieur | 3 | Complete Stainless |
| | 1 | **487 1975-94** | Revesible front with coin | Façade réversible, monnaieur | 3 | Complete Beige |
| **10** | 1 | **487 1935-32** | •Seal | •Etanchéité | 1 | Complete |
| * **11** | 1 | **487 0215-72** | •Locking unit | •Unité verrouillage | 3 | Complete |
| **12** | 2 | **487 2260-74** | •Screw | •Vis | 3 | M5X13 |
| **13** | 8 | **487 1701-41** | Plug | Bouchon | 3 | White |
| | 8 | **487 2317-76** | Plug | Bouchon | 3 | Grey |
| **14** | 1 | **471 2068-48** | Insulation | Isolation | 3 | |
| **15** | 1 | **487 1898-10** | Microswitch | Microrupteur | 1,2 | |
| **16** | 1 | **487 1813-10** | Bracket | Support | 3 | |
| **17** | 1 | **487 3390-02** | Hinge | Charnière | 3 | Complete |
| **18** | 1 | **487 2336-61** | •Hinge | •Charnière | 3 | Upper |
| **19** | 1 | **487 2336-60** | •Hinge | •Charnière | 3 | Lower |
| **20** | 4 | **487 1760-31** | •Screw | •Vis | 3 | M5X12 |
| **21** | 1 | **487 1831-48** | Rear panel | Plaque arrière | 3 | |
| **22** | 1 | **487 1875-05** | Cover plate | Plaque recouvrement | 3 | White |
| | 1 | **487 1875-41** | Cover plate | Plaque recouvrement | 3 | Green |
| | 1 | **487 1875-55** | Cover plate | Plaque recouvrement | 3 | Stainless |
| | 1 | **487 1875-63** | Cover plate | Plaque recouvrement | 3 | Beige |

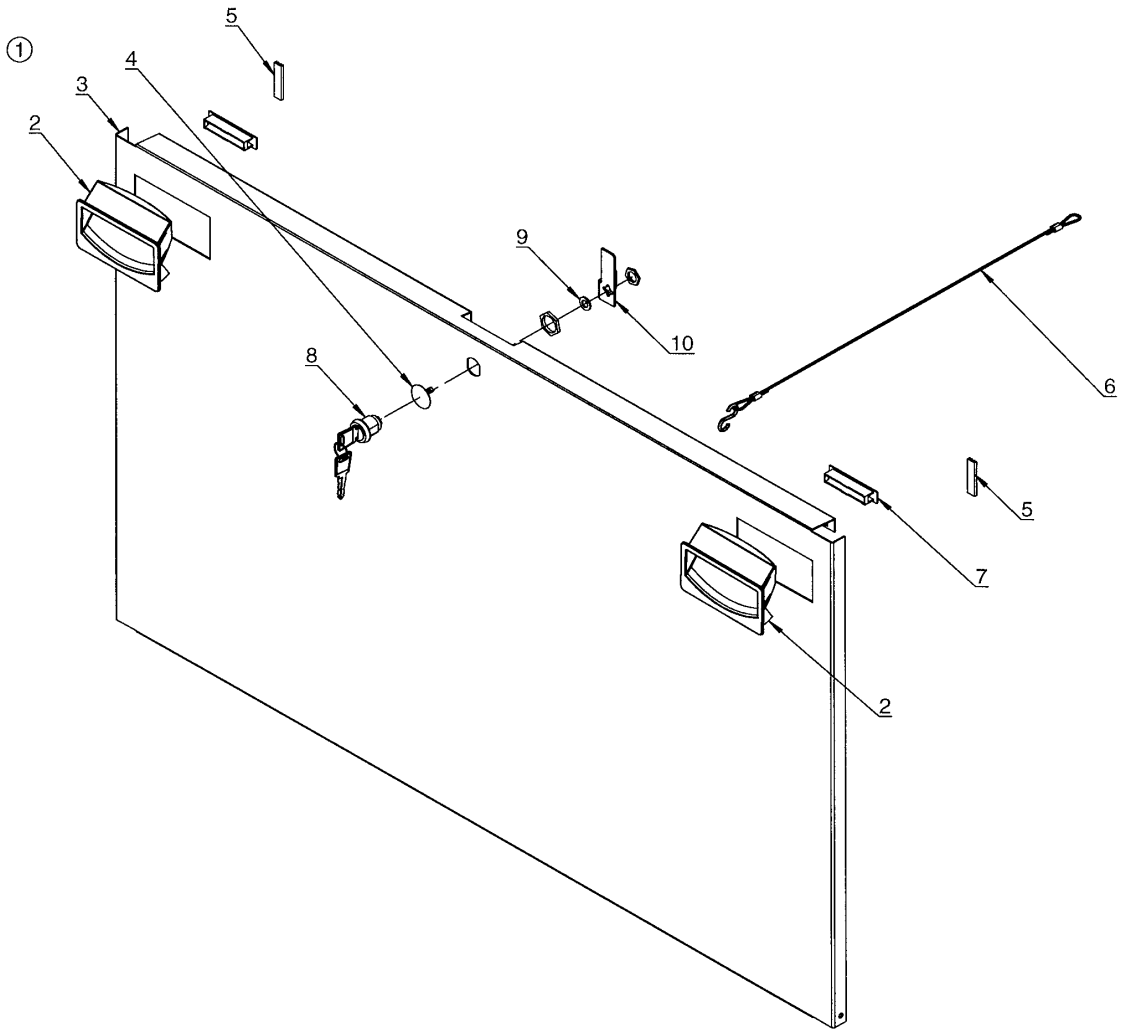


| Issue | Month | Year |
|---|---|---|
| 04 | 11 | 03 |

10 20 54

Tegn. 487 22 53 39

**TD75 0009/1734-**

**Filter hatch complete**

**Plaque filtre complète**

| Illustration | Issue | Month | Year |
|---|---|---|---|
| Schéma | Issue | Month | Year |
| **102054/4** | **5** | **4** | **2004** |

| Item<br>Article | Qua<br>Qua | Art.No<br>Réf. article | Description | Description | Info<br>Info | Notes<br>Remarques |
|---|---|---|---|---|---|---|
| **1** | 1 | **487 1974-00** | Filter hatch complete | Plaque filtre complète | 3 | White |
| | 1 | **487 1974-02** | Filter hatch complete | Plaque filtre complète | 3 | Green |
| | 1 | **487 1974-03** | Filter hatch complete | Plaque filtre complète | 3 | Stainless |
| | 1 | **487 1974-05** | Filter hatch complete | Plaque filtre complète | 3 | Beige |
| **2** | 2 | **487 1920-05** | •Handle | •Manivelle | 3 | |
| **3** | 1 | **487 2216-05** | •Filter hatch | •Volet du filtre | 3 | White |
| | 1 | **487 2216-41** | •Filter hatch | •Volet du filtre | 3 | Green |
| | 1 | **487 2216-55** | •Filter hatch | •Volet du filtre | 3 | Stainless |
| | 1 | **487 2216-73** | •Filter hatch | •Volet du filtre | 3 | Beige |
| **4** | 1 | **487 1818-24** | •Plug | •Bouchon | 3 | |
| **5** | 2 | **647 1209-42** | •Sealing strip | •Bande d'étanchéité | 3 | |
| **6** | 1 | **487 1974-96** | •Steel wire | •Câble métallique | 3 | Complete |
| **7** | 2 | **487 1510-88** | Magnetic lock | Verrouillage magnétique | 3 | |
| **8** | 1 | **487 1946-53** | Lock | Serrure | 3 | Complete |
| | 1 | **487 1707-12** | •Key | •Clé | 3 | |
| **9** | 1 | **487 1875-00** | •Lock washer | •Rondelle d'arrêt | 3 | |
| **10** | 1 | **487 1756-29** | Lock catch | Verrou | 3 | |

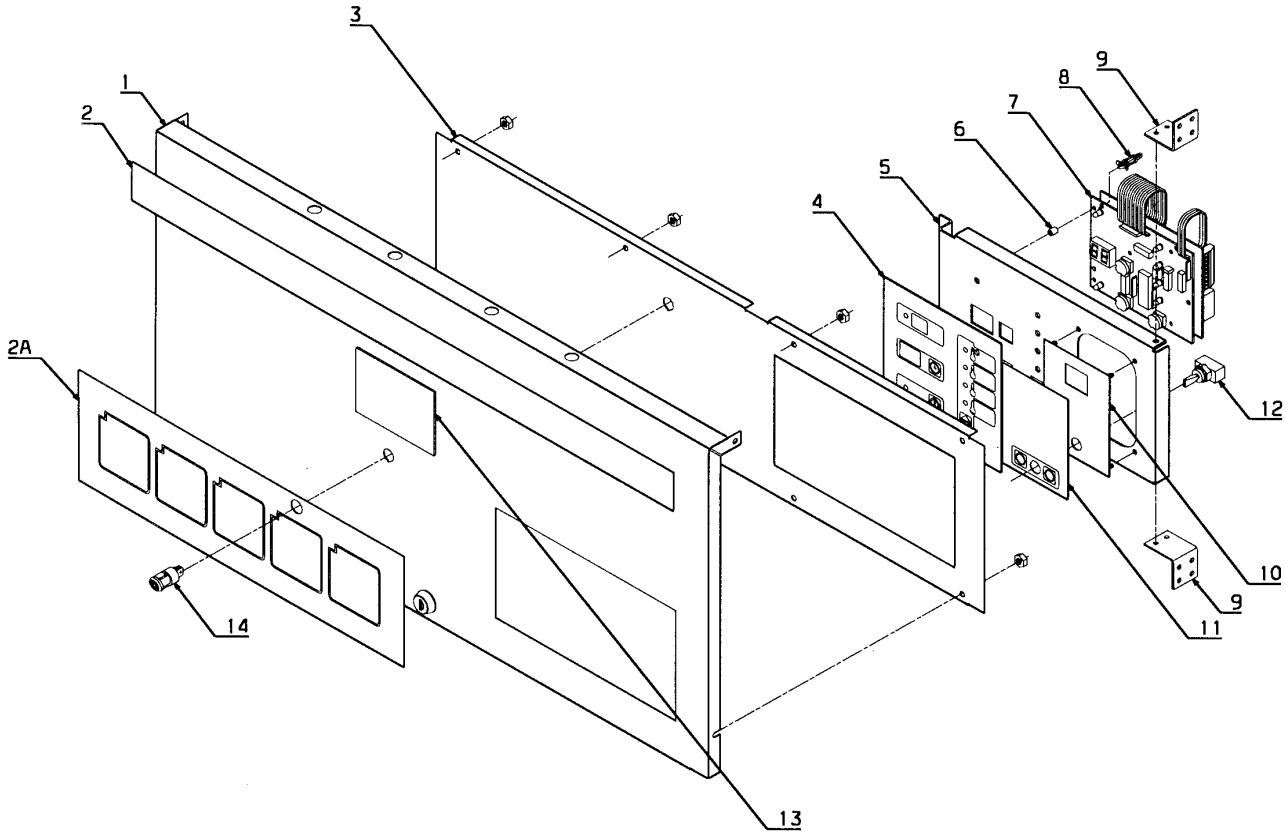


| Issue | Month | Year |
|---|---|---|
| 05 | 10 | 02 |

Tegn. 487 18 96 36

10 15 79

**TD75 -20750/6061**

**Control panel, manual**

**Pupitre de commande, manuel**

| Illustration | Issue | Month | Year |
|---|---|---|---|
| Schéma | Issue | Month | Year |
| **101579/5** | **7** | **11** | **2003** |

| Item<br>Article | Qua<br>Qua | Art.No<br>Réf. article | Description | Description | Info<br>Info | Notes<br>Remarques |
|---|---|---|---|---|---|---|
| **1** | 1 | **487 1504-99** | Front panel | Panneau de façade | | See illustr. 102052 |
| **2** | 1 | **487 1704-25** | Type plate | Numéro série plque | 3 | Wascomat TD75 |
| **2A** | 1 | **487 1703-83** | Instruction plate | Plaque instructionutilisation | 3 | OPL |
| | 1 | **487 1703-70** | Instruction plate | Plaque instructionutilisation | 3 | Aqua Clean (Wascomat) |
| | 1 | **487 1702-60** | Instruction plate | Plaque instructionutilisation | 3 | Moisture sensor |
| **3** | 1 | **487 1763-61** | Panel plate | Plaque du tableau | 3 | Reversing -0206/0004021 |
| | 1 | **487 1763-65** | Panel plate | Plaque du tableau | 3 | -0206/0004021 |
| **4** | 1 | **487 1702-68** | Operation sign | Etiquette | 3 | |
| **5** | 1 | **487 0191-11** | Inner plate | Plaque intérieure | 3 | |
| **6** | 6 | **487 1535-21** | Spacer element | Pièce écartement | 3 | |
| **7** | 1 | **489 0112-61** | Printed circuit board | Carte de circuit imprimé | 1,2 | Complete |
| **8** | 4 | **487 0191-23** | Spacer element | Pièce écartement | 3 | |
| **9** | 2 | **487 1702-09** | Hinge | Charnière | 3 | |
| **10** | 1 | **487 1703-23** | Plate - ON/OFF button | Plaque - ON/OFF bouton | 3 | |
| **11** | 1 | **487 1703-82** | Sign | Signe | 3 | Reversing |
| **12** | 1 | **488 6571-02** | Toggle switch | Commutateur bascule | 1,2 | Reversing |
| **13** | 1 | **487 1924-72** | Sign | Signe | 3 | Moisture sensor |
| **14** | 1 | **487 1897-09** | Pilot lamp | Lampe témoin | 3 | Red |

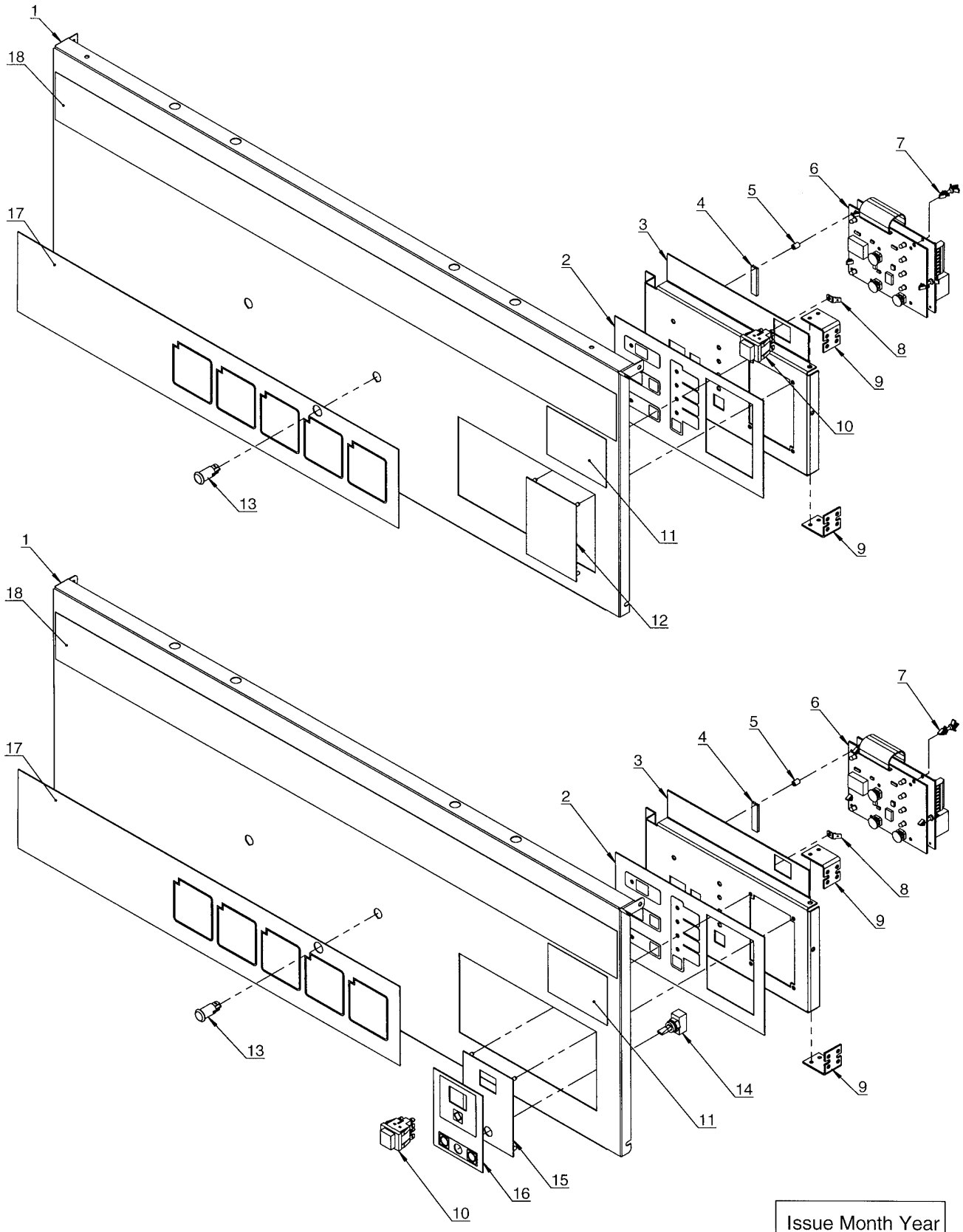


| Issue Month Year |
| --- |
| 01 11 03 |

20 01 04

Tegn. 487 22 54 45

**TD75 20750/6062-**

**Control panel, manual, Basic 3**

**Panneau de commande manuel, Basic 3**

| Illustration | Issue | Month | Year |
|---|---|---|---|
| Schéma | Issue | Month | Year |
| **200104/1** | **2** | **4** | **2004** |

| Item<br>Article | Qua<br>Qua | Art.No<br>Réf. article | Description | Description | Info<br>Info | Notes<br>Remarques |
|---|---|---|---|---|---|---|
| **1** | 1 | **487 2368-05** | Front panel | Panneau de façade | 3 | White |
| | 1 | **487 2368-41** | Front panel | Panneau de façade | 3 | Green |
| | 1 | **487 2368-55** | Front panel | Panneau de façade | 3 | Stainless |
| | 1 | **487 2368-63** | Front panel | Panneau de façade | 3 | Beige |
| **2** | 1 | **487 1702-68** | Operation sign | Etiquette | 3 | |
| **3** | 1 | **487 2368-01** | Inner plate | Plaque intérieure | 3 | Silvergrey |
| **4** | 1 | **647 1209-42** | Sealing strip | Bande d'étanchéité | 3 | |
| **5** | 6 | **487 1535-21** | Spacer element | Pièce écartement | 3 | |
| **6** | 1 | **489 0112-61** | Printed circuit board | Carte de circuit imprimé | 1,2 | Complete |
| **7** | 4 | **487 0191-23** | Spacer element | Pièce écartement | 3 | |
| **8** | 2 | **487 7057-40** | Terminal | Terminal | 3 | |
| **9** | 2 | **487 1702-09** | Hinge | Charnière | 3 | |
| **10** | 1 | **487 0274-17** | Push-button | Bouton poussoir | 3 | |
| **11** | 1 | **487 1924-72** | Sign | Signe | 3 | Moisture sensor |
| **12** | 1 | **487 2336-43** | Cover plate | Plaque recouvrement | 3 | Silvergrey |
| **13** | 1 | **487 0274-15** | Pilot lamp | Lampe témoin | 3 | Red |
| **14** | 1 | **488 6571-02** | Toggle switch | Commutateur bascule | 1,2 | Reversing |
| **15** | 1 | **487 1703-23** | Plate - ON/OFF button | Plaque - ON/OFF bouton | 3 | |
| **16** | 1 | **487 1703-80** | Sign | Signe | 3 | Gas With reversing |
| | 1 | **487 1703-81** | Sign | Signe | 3 | Gas Without reversing |
| | 1 | **487 1703-82** | Sign | Signe | 3 | With reversing |
| **17** | 1 | **487 2226-58** | Instruction plate | Plaque instructionutilisation | 3 | OPL |
| | 1 | **487 2226-60** | Instruction plate | Plaque instructionutilisation | 3 | Moisture sensor |
| | 1 | **487 2226-61** | Instruction plate | Plaque instructionutilisation | 3 | Aqua - Clean |
| **18** | 1 | **487 1704-25** | Type plate | Numéro série plque | 3 | Wascomat TD75 |

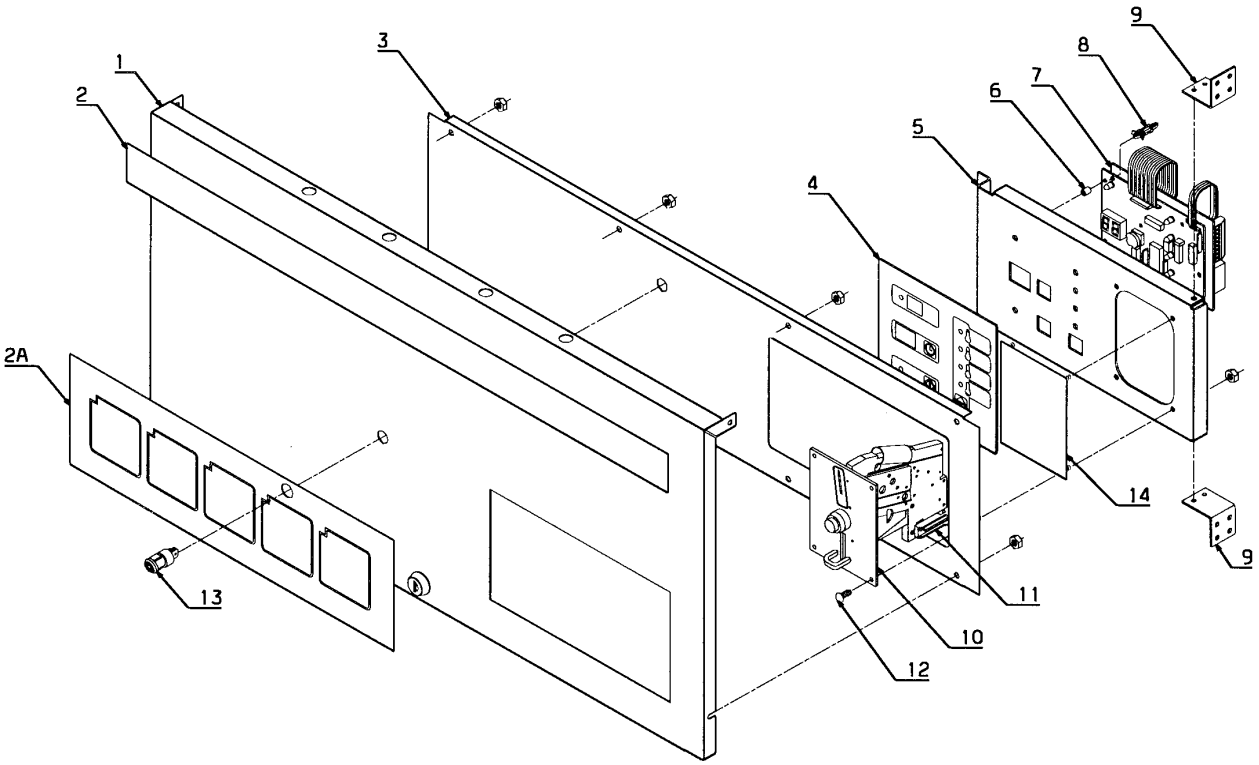


| Issue | Month | Year |
|---|---|---|
| 05 | 10 | 02 |

Tegn. 487 18 96 37

10 15 80

**TD75 -20750/6061**

**Control panel with coin**

**Pupitre de commande, monnayeur**

| Illustration | Issue | Month | Year |
|---|---|---|---|
| Schéma | Issue | Month | Year |
| **101580/5** | **9** | **6** | **2004** |

| Item<br>Article | Qua<br>Qua | Art.No<br>Réf. article | Description | Description | Info<br>Info | Notes<br>Remarques |
|---|---|---|---|---|---|---|
| **1** | 1 | **487 1504-99** | Front panel | Panneau de façade | | See illustr. 102052 |
| **2** | 1 | **487 1704-25** | Type plate | Numéro série plque | 3 | Wascomat TD75 |
| **2A** | 1 | **487 1702-70** | Instruction plate | Plaque instructionutilisation | 3 | |
| | 1 | **487 1703-83** | Instruction plate | Plaque instructionutilisation | 3 | OPL |
| **3** | 1 | **487 1763-61** | Panel plate | Plaque du tableau | 3 | -0206/0004021 |
| **4** | 1 | **487 1702-68** | Operation sign | Etiquette | 3 | |
| **5** | 1 | **487 0191-11** | Inner plate | Plaque intérieure | 3 | |
| **6** | 6 | **487 1535-21** | Spacer element | Pièce écartement | 3 | |
| **7** | 1 | **489 0112-61** | Printed circuit board | Carte de circuit imprimé | 1,2 | Complete |
| **8** | 4 | **487 0191-23** | Spacer element | Pièce écartement | 3 | |
| **9** | 2 | **487 1702-09** | Hinge | Charnière | 3 | |
| **10** | 1 | **471 8922-07** | Coin coin | Sélecteur de monnaie | | 1 Token Ø22,45x1,7 USA See illustr. 200105 |
| **11** | 1 | **471 8910-91** | Sensor | Détecteur | | Müller See illustr. 200105 |
| **12** | 4 | **487 1057-03** | Screw | Vis | 3 | M4X30 |
| **13** | 1 | **487 1897-09** | Pilot lamp | Lampe témoin | 3 | Red |
| **14** | 1 | **487 2336-43** | Cover plate | Plaque recouvrement | 3 | Silvergrey |
| | 1 | **487 0106-07** | Cover plate | Plaque recouvrement | 3 | Graphitegrey |

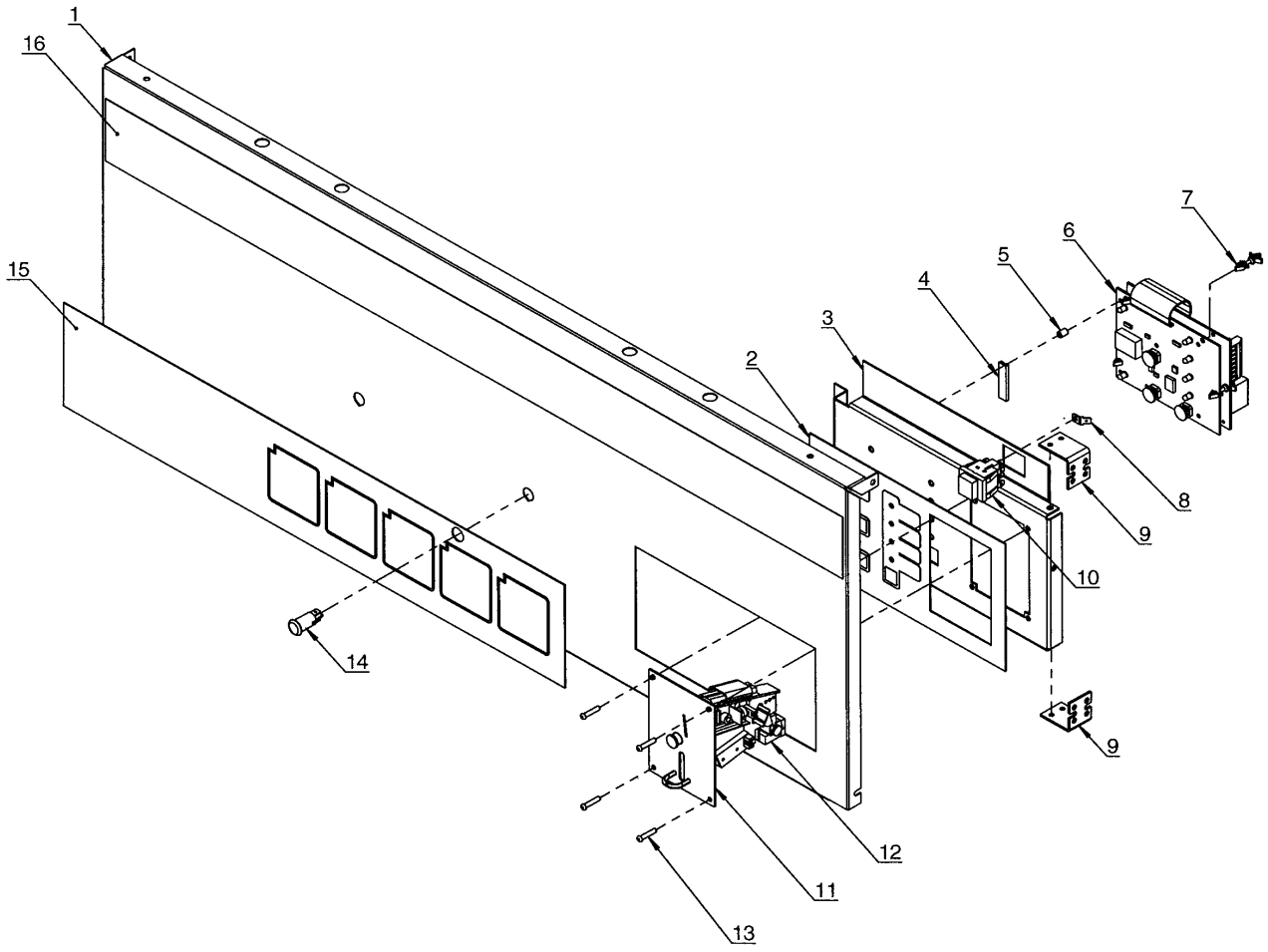


| Issue Month Year |
| --- |
| 02 02 04 |

Tegn. 487 22 54 46

20 01 05

**TD75 20750/6062-**

**Control panel, with coin, Basic 3**

**Panneau de commande monnayeur, Basic 3**

| Illustration | Issue | Month | Year |
|---|---|---|---|
| Schéma | Issue | Month | Year |
| **200105/1** | **4** | **9** | **2004** |

| Item<br>Article | Qua<br>Qua | Art.No<br>Réf. article | Description | Description | Info<br>Info | Notes<br>Remarques |
|---|---|---|---|---|---|---|
| **1** | 1 | **487 2368-05** | Front panel | Panneau de façade | 3 | White |
| | 1 | **487 2368-41** | Front panel | Panneau de façade | 3 | Green |
| | 1 | **487 2368-55** | Front panel | Panneau de façade | 3 | Stainless |
| | 1 | **487 2368-63** | Front panel | Panneau de façade | 3 | Beige |
| **2** | 1 | **487 1702-68** | Operation sign | Etiquette | 3 | |
| **3** | 1 | **487 2368-01** | Inner plate | Plaque intérieure | 3 | Silvergrey |
| **4** | 1 | **647 1209-42** | Sealing strip | Bande d'étanchéité | 3 | |
| **5** | 6 | **487 1535-21** | Spacer element | Pièce écartement | 3 | |
| **6** | 1 | **489 0112-61** | Printed circuit board | Carte de circuit imprimé | 1,2 | Complete |
| **7** | 4 | **487 0191-23** | Spacer element | Pièce écartement | 3 | |
| **8** | 1 | **487 7057-40** | Terminal | Terminal | 3 | |
| **9** | 2 | **487 1702-09** | Hinge | Charnière | 3 | |
| **10** | 1 | **487 0274-17** | Push-button | Bouton poussoir | 3 | |
| **11** | 1 | **487 1457-01** | Coin coin | Sélecteur de monnaie | 3 | 25 cent USA |
| | 1 | **487 1457-02** | Coin coin | Sélecteur de monnaie | 3 | 25 cent Canada |
| | 1 | **487 1457-30** | Coin coin | Sélecteur de monnaie | 3 | 1 Dollar Canada |
| | 1 | **487 1457-84** | Coin coin | Sélecteur de monnaie | 3 | 1 Token Ø22,45x1,7 USA |
| * | 1 | **487 1457-94** | Coin coin | Sélecteur de monnaie | 3 | 1 Dollar+25 cent Canada |
| **12** | 1 | **487 0281-98** | Sensor | Détecteur | 3 | |
| **13** | 4 | **487 1057-03** | Screw | Vis | 3 | M4X30 |
| **14** | 1 | **487 0274-15** | Pilot lamp | Lampe témoin | 3 | Red |
| **15** | 1 | **487 2226-59** | Instruction plate | Plaque instructionutilisation | 3 | |
| **16** | 1 | **487 1704-25** | Type plate | Numéro série plque | 3 | Wascomat TD75 |

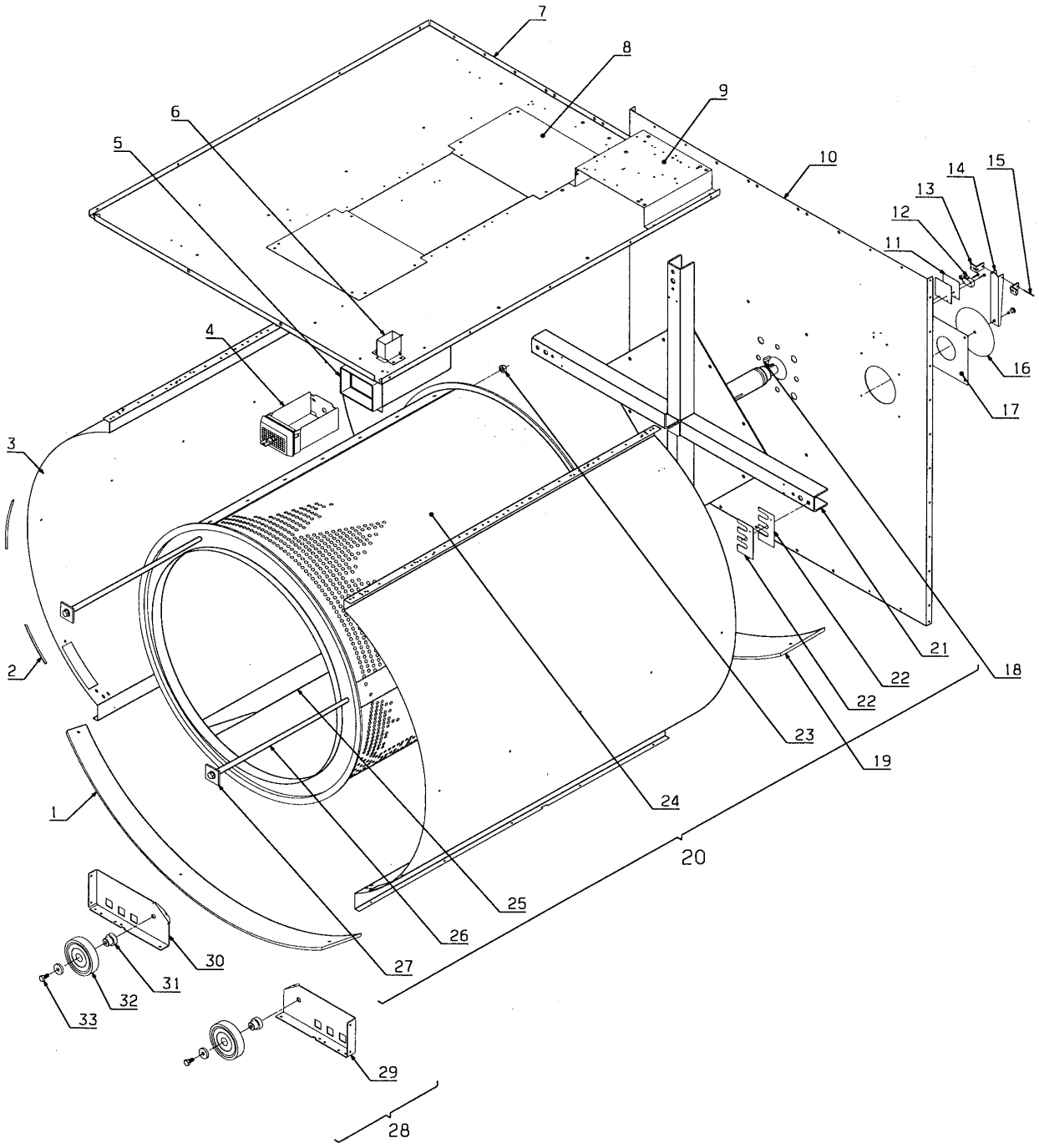


| Issue | Month | Year |
|---|---|---|
| 10 | 04 | 04 |

Tegn. 487 18 96 33

10 15 73

**TD75**

**Drum, compl.**

**Tambour, complet**

| Illustration | Issue | Month | Year |
|---|---|---|---|
| Schéma | Issue | Month | Year |
| **101573/10** | **11** | **4** | **2004** |

| Item<br>Article | Qua<br>Qua | Art.No<br>Réf. article | Description | Description | Info<br>Info | Notes<br>Remarques |
|---|---|---|---|---|---|---|
| | 1 | **487 1695-92** | Cover plate | Plaque recouvrement | 3 | |
| **2** | 4 | **487 2290-92** | Plastic profile | Profile en plastique | 1 | 80mm |
| **3** | 2 | **487 1821-01** | Casing | Carter | 3 | Complete |
| **4** | 1 | **487 1694-92** | Coin box | Boîtier à jetons | 3 | |
| **5** | 1 | **487 1756-79** | Coin box | Boite à jetons | 3 | Silvergrey |
| **6** | 1 | **487 1763-08** | Coin meter accessory | Accessoire comptemonnaie | 3 | |
| **7** | 1 | **487 1695-64** | Buttom plate | Plaque du fond | 3 | |
| **8** | 2 | **487 1781-23** | Air reducing plate | Tôle de réduction | 3 | El |
| | 1 | **487 1831-72** | Air reducing plate | Tôle de réduction | 3 | Steam |
| **9** | 1 | **487 1820-37** | Bracket | Console | 3 | -20750/6061 |
| **10** | 1 | **487 1820-45** | Rear panel | Plaque arrière | 3 | |
| **11** | 2 | **471 2068-48** | Insulation | Isolation | 3 | |
| **12** | 1 | **487 1897-05** | Microswitch | Microrupteur | 1,2 | |
| **13** | 2 | **472 7308-01** | Bracket | Support | 3 | |
| **14** | 1 | **472 7307-01** | Arm | Bras | 3 | |
| **15** | 1 | **471 7903-03** | Shaft | Axe | 3 | |
| **16** | 1 | **471 8502-18** | Disc | Disque | 3 | D=123,5 |
| **17** | 1 | **487 1831-13** | Air reducing plate | Tôle de réduction | 3 | |
| **18** | 1 | **487 0151-15** | Wedge | Cheville | 3 | |
| **19** | 1 | **487 1695-91** | Cover plate | Plaque recouvrement | 3 | |
| **20** | 1 | **471 1765-29** | Drum with shaft cross | Tambour avec croix d'arbres | 3 | Galvanised |
| | 1 | **471 1765-30** | Drum with shaft cross | Tambour avec croix d'arbres | 3 | Stainless |
| **21** | 1 | **487 1714-38** | •Shaft cross | •Croix d'arbres | 3 | Complete |
| **22** | RQ | **487 1935-59** | •Under lay | •Entretoise | 3 | |
| **23** | 4 | **732 2118-01** | •Locking nut | •Contre-écrou | | M8 |
| **24** | 1 | **471 1765-13** | •Drum | •Tambour | 3 | Galvanised Complete |
| | 1 | **471 1765-14** | •Drum | •Tambour | 3 | Stainless Complete |
| **25** | 4 | **487 1816-72** | ••Lifter | ••Battoir | 3 | Galvanised |
| | 4 | **487 1816-21** | ••Lifter | ••Battoir | 3 | Stainless |
| **26** | 4 | **487 1820-78** | •Brace | •Montant | 3 | |
| **27** | 4 | **487 1694-69** | •End stop | •Butée | 3 | |
| **28** | 1 | **487 1976-82** | Support roller | Galet de soutien | 3 | Complete 0206/004018- |
| **29** | 1 | **487 1829-14** | •Fitting | •Garniture | 3 | Right 0206/004018- |
| **30** | 1 | **487 1829-09** | •Fitting | •Garniture | 3 | Left 0206/004018- |
| **31** | 2 | **487 1376-07** | •Support roller | •Galet de soutien | 3 | 0206/004018- |
| **32** | 2 | **487 2317-04** | •Shaft | •Axe | 3 | 0206/004018- |
| **33** | 2 | **488 0140-40** | •Screw | •Vis | 3 | M8X40 0206/004018- |

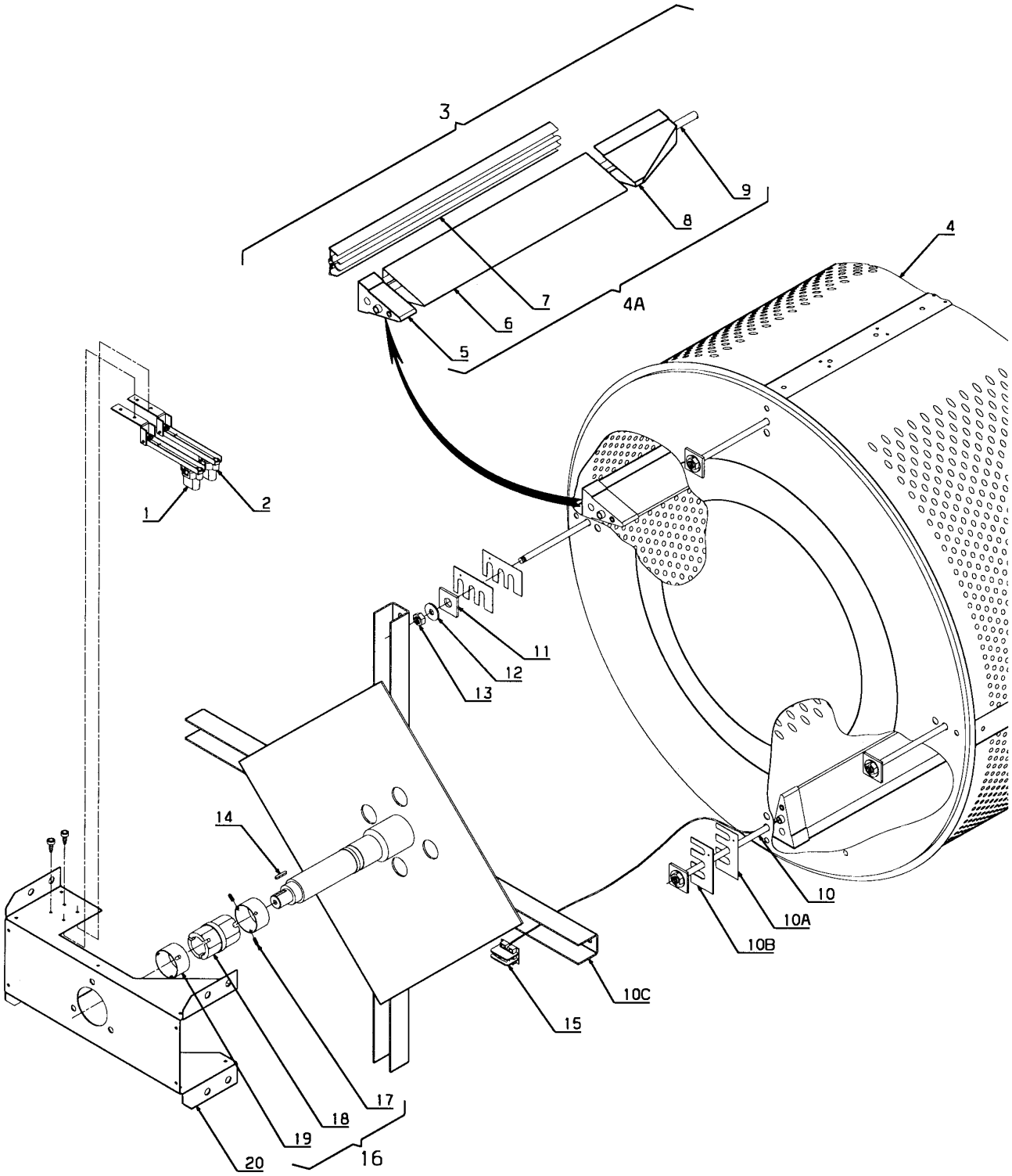


| Issue | Month | Year |
|---|---|---|
| 02 | 02 | 03 |

10 20 55

Tegn. 487 22 53 40

**TD75**

## Drum with moisture sensor
## Tambour avec capteur humidité

| Illustration | Issue | Month | Year |
|---|---|---|---|
| Schéma | Issue | Month | Year |
| **102055/2** | **3** | **11** | **2003** |

| Item<br>Article | Qua<br>Qua | Art.No<br>Réf. article | Description | Description | Info<br>Info | Notes<br>Remarques |
|---|---|---|---|---|---|---|
| **1** | 1 | **487 0101-98** | Sensor | Détecteur | 1,2 | Complete Right |
| **2** | 1 | **487 0101-97** | Sensor | Détecteur | 1,2 | Complete Left |
| **3** | 1 | **471 1765-31** | Drum with shaft cross | Tambour avec croix d'arbres | 3 | Galvanised |
| | 1 | **471 1765-32** | Drum with shaft cross | Tambour avec croix d'arbres | 3 | Stainless |
| **4** | 1 | **471 1765-15** | •Drum | •Tambour | 3 | Galvanised Complete |
| | 1 | **471 1765-16** | •Drum | •Tambour | 3 | Stainless Complete |
| **4A** | 4 | **487 2199-30** | ••Lifter | ••Battoir | 3 | Galvanised Complete |
| | 4 | **487 2199-31** | ••Lifter | ••Battoir | 3 | Stainless Complete |
| **5** | 1 | **487 1820-93** | •••End part | •••Plaque désenclenchement | 3 | |
| **6** | 1 | **487 1820-11** | •••Lifter | •••Battoir | 3 | Galvanised |
| | 1 | **487 1820-94** | •••Lifter | •••Battoir | 3 | Stainless |
| **7** | 1 | **487 1870-08** | •••Profile | •••Profilé | 3 | |
| **8** | 1 | **487 1820-92** | •••End part | •••Plaque désenclenchement | 3 | |
| **9** | 1 | **487 1820-79** | •••Brace | •••Montant | 3 | |
| **10** | 4 | **487 1820-78** | •Brace | •Montant | 3 | |
| **10A** | 2 | **487 1756-01** | •Under lay | •Entretoise | 3 | 1MM |
| **10B** | 2 | **487 1756-02** | •Under lay | •Entretoise | 3 | 1,5MM |
| **10C** | 1 | **487 0151-12** | •Shaft cross | •Croix d'arbres | 3 | |
| **11** | 4 | **487 1694-69** | •End stop | •Butée | 3 | |
| **12** | 4 | **734 1164-31** | •Disc | •Disque | | M8 |
| **13** | 4 | **732 2118-01** | •Locking nut | •Contre-écrou | | M8 |
| **14** | 1 | **487 0151-15** | Wedge | Cheville | 3 | |
| **15** | 1 | **487 1898-83** | Cable set | Ensemble de câbles | 3 | |
| **16** | 1 | **487 1831-00** | Sensor | Détecteur | 3 | Complete |
| **17** | 3 | **487 1831-07** | •Screw | •Vis | 3 | M4X6 |
| **18** | 1 | **487 1820-34** | •Insulator | •Isolant | 3 | |
| **19** | 2 | **487 1820-35** | •Ring | •Anneau | 3 | |
| **20** | 1 | **487 1695-30** | Schaft carrier | Porteur d'axe | 3 | |

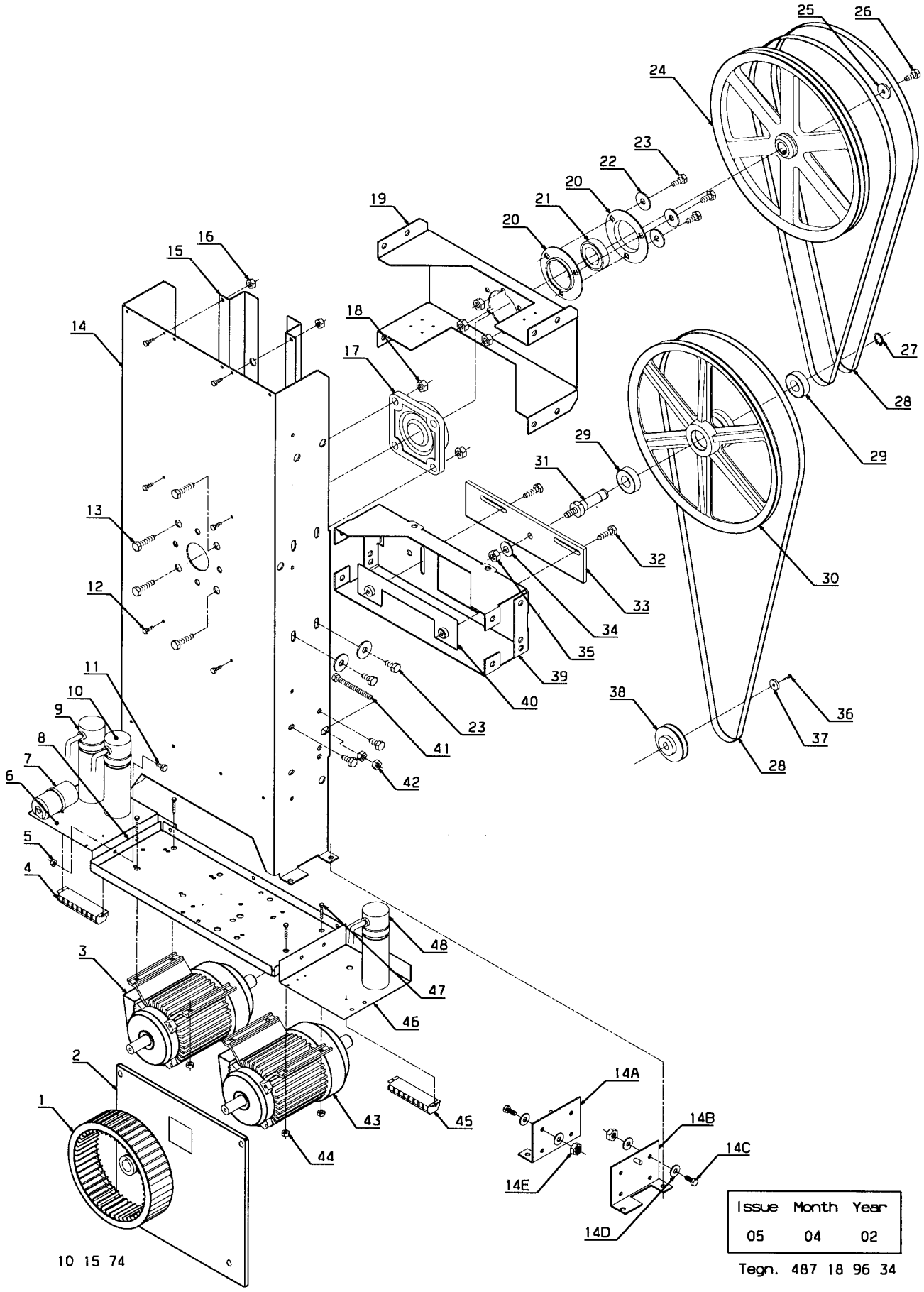


10 15 74

| Issue | Month | Year |
|---|---|---|
| 05 | 04 | 02 |

Tegn. 487 18 96 34

**TD75 -0012/2092**

**Motor alternative**

**Alternative moteur**

| Illustration | Issue | Month | Year |
|---|---|---|---|
| Schéma | Issue | Month | Year |
| **101574/5** | **9** | **11** | **2004** |

| Item<br>Article | Qua<br>Qua | Art.No<br>Réf. article | Description | Description | Info<br>Info | Notes<br>Remarques |
|---|---|---|---|---|---|---|
| **1** | 1 | **487 1976-74** | Fan wheel | Poulie ventilateur | 3 | Ø180 Complete |
| **2** | 1 | **487 1695-87** | Flange | Bride | 3 | |
| **3** | 1 | **487 1976-10** | Motor | Moteur | 1,2 | 120V 1AC 60Hz Drum |
| | 1 | **487 1976-40** | Motor | Moteur | 1,2 | 208-240V 1AC 60Hz Drum |
| * | 1 | **487 1935-77** | Motor | Moteur | 1,2 | 208-240V 3AC 60Hz, Drum |
| **4** | 1 | **487 1899-98** | •Terminal block | •Borne de raccordement | 3 | 8-pol |
| **5** | 3 | **732 2116-01** | •Locking nut | •Contre-écrou | | M6 |
| **6** | 1 | **487 1794-56** | •Fitting | •Garniture | 3 | |
| **7** | 1 | **471 9566-01** | •Relay | •Relais | 1,2 | 120V/ 1AC/ Start |
| | 1 | **471 9566-05** | •Relay | •Relais | 1,2 | 208-240V/1AC/ Start |
| **8** | 1 | **487 1829-52** | •Motor bracket | •Appui de moteur | 3 | |
| **9** | 2 | **487 1899-88** | •Capacitor | •Condensateur | 1,2 | 80µF 120V/ 1AC/ Start |
| | 1 | **487 1899-91** | •Capacitor | •Condensateur | 1,2 | 16µF 208-240V/1AC/ Working |
| **10** | 1 | **487 1703-96** | •Capacitor | •Condensateur | 1,2 | 30µF 208-240V/1AC/ Start |
| **11** | 3 | **725 2370-51** | •Screw | •Vis | | M6X20 |
| **12** | 8 | **725 2366-51** | Screw | Vis | | M6X12 |
| **13** | 4 | **725 2538-51** | Screw | Vis | | M12X35 |
| **14** | 1 | **487 1816-78** | Column | Colonne | 3 | |
| | 1 | **487 1972-09** | Column | Colonne | 3 | Complete -0203/003497 |
| **14A** | 1 | **487 2204-03** | •Fitting | •Garniture | 3 | Left -0203/003497 |
| **14B** | 1 | **487 2204-01** | •Fitting | •Garniture | 3 | Right -0203/003497 |
| **14C** | 8 | **725 2451-51** | •Screw | •Vis | | M8X20 |
| **14D** | 16 | **734 1164-31** | •Disc | •Disque | | M8 |
| **14E** | 8 | **732 2118-01** | •Locking nut | •Contre-écrou | | M8 |
| **15** | 2 | **487 1829-50** | Reinforcement | Renforcement | 3 | |
| **16** | 8 | **731 2316-01** | Nut | Écrou | | M6 |
| **17** | 1 | **487 1695-54** | Bearing house with bearing | Logement de palier avec palier | 1,2 | |
| **18** | 4 | **731 2322-01** | Nut | Écrou | | M12 |
| **19** | 1 | **487 1820-30** | Bracket | Support | 3 | |
| **20** | 1 | **487 1694-48** | Bearing disc | Disque de roulement | 3 | |
| **21** | 1 | **487 1695-53** | Bearing | Coussinet | 1,2 | |
| **22** | 8 | **734 1173-01** | Disc | Disque | | Ø10,5/Ø21 |
| **23** | 16 | **488 0142-20** | Bolt | Boulon | 3 | M10X20 |
| **24** | 1 | **471 1764-74** | Drum, transmission complete | Tambour, transmission complet | 3 | Galvanised |
| | 1 | **471 1764-75** | Drum, transmission complete | Tambour, transmission complet | 3 | Stainless |
| | 1 | **471 1764-78** | Drum, transmission complete | Tambour, transmission complet | 3 | Galvanised Moisture sensor |
| | 1 | **471 1764-79** | Drum, transmission complete | Tambour, transmission complet | 3 | Stainless Moisture sensor |
| **25** | 1 | **488 0142-30** | •Screw | •Vis | 3 | M10X30 |
| **26** | 1 | **487 0151-86** | •Disc | •Disque | 3 | Ø10,5/Ø44,5X4 |
| **27** | 1 | **735 3122-00** | C-clamp | Attache en forme C | 3 | D20 |
| **28** | 3 | **487 1831-79** | V-belt | Courroie trapézoïdale | 1,2 | |
| **29** | 2 | **738 2104-04** | Ball bearing | Roulement à billes | 1,2 | |
| **30** | 1 | **487 1831-05** | Pulley | Poulie | 3 | 50/60Hz |
| **31** | 1 | **487 1694-35** | Shaft | Axe | 3 | |
| **32** | 2 | **725 2497-51** | Screw | Vis | | M10X35 |
| **33** | 1 | **487 1829-74** | Plate | Plaque | 3 | |
| **34** | 1 | **487 0151-86** | Disc | Disque | 3 | Ø10,5/Ø44,5X4 |
| **35** | 1 | **731 2322-01** | Nut | Écrou | | M12 |
| **36** | 1 | **488 0139-16** | Screw | Vis | 3 | M5X16 |
| **37** | 1 | **471 9018-51** | Disc | Disque | 3 | Ø6,4/ Ø22 |

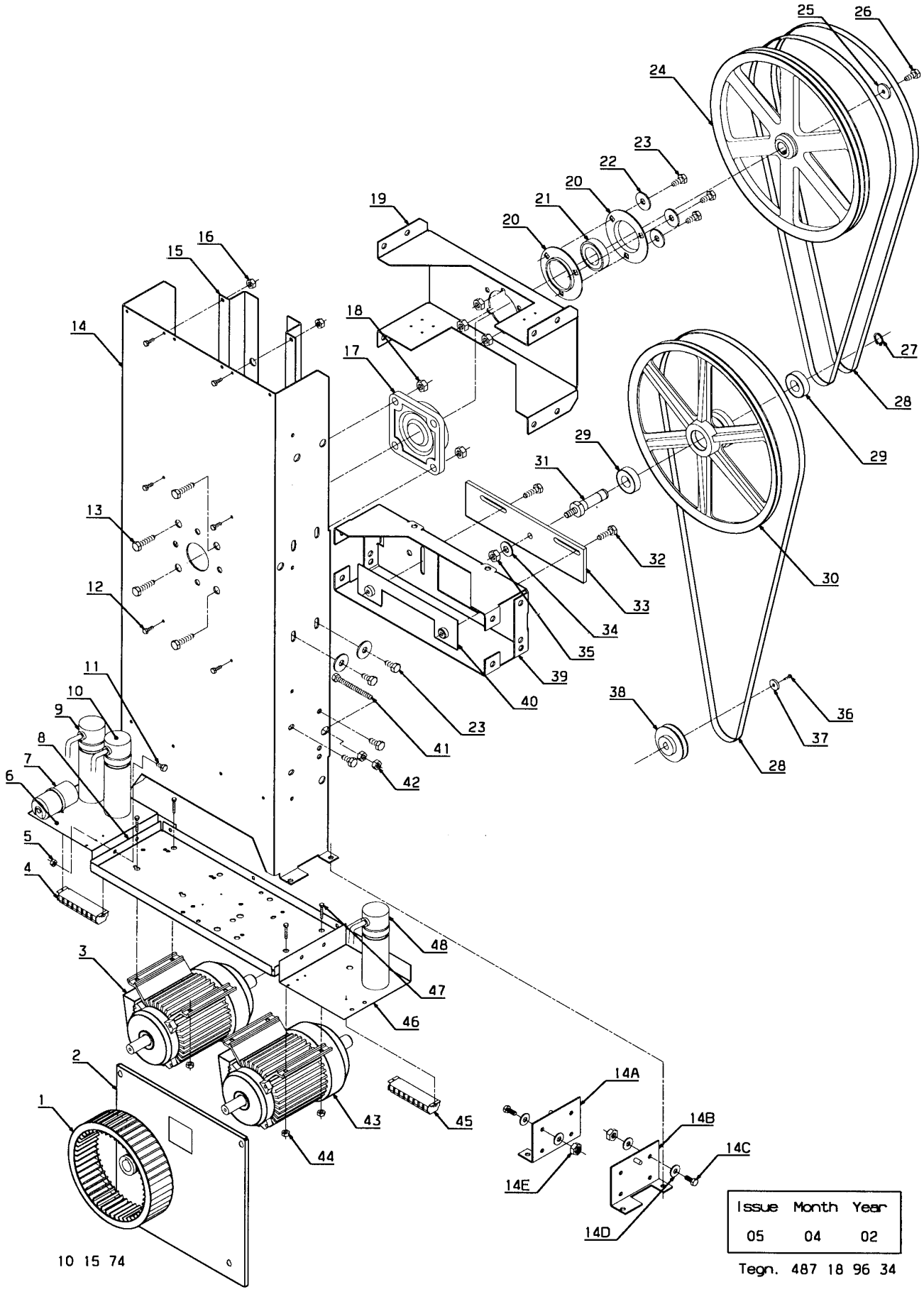


10 15 74

| Issue | Month | Year |
|---|---|---|
| 05 | 04 | 02 |

Tegn. 487 18 96 34

**TD75 -0012/2092**

**Motor alternative**

**Alternative moteur**

| Illustration | Issue | Month | Year |
|---|---|---|---|
| Schéma | Issue | Month | Year |
| **101574/5** | **9** | **11** | **2004** |

| Item<br>Article | Qua<br>Qua | Art.No<br>Réf. article | Description | Description | Info<br>Info | Notes<br>Remarques |
|---|---|---|---|---|---|---|
| **38** | 1 | **487 1897-62** | Pulley | Poulie | 3 | 60Hz |
| **39** | 1 | **487 1829-53** | Spacer | Entretoise | 3 | |
| **40** | 1 | **487 1694-34** | Plate | Plaque | 3 | |
| **41** | 1 | **488 0118-99** | Screw | Vis | 3 | M8X100 |
| **42** | 6 | **731 2318-01** | Nut | Écrou | | M8 |
| **43** | 1 | **487 1976-09** | Motor | Moteur | 1,2 | 120V 1AC 60Hz Fan wheel |
| | 1 | **487 1976-41** | Motor | Moteur | 1,2 | 208-240V 1AC 60Hz Fan wheel |
| * | 1 | **487 1935-77** | Motor | Moteur | 1,2 | 208-240V 3AC 60Hz, Fan wheel |
| **44** | 8 | **732 2116-01** | •Locking nut | •Contre-écrou | | M6 |
| **45** | 1 | **487 1899-98** | •Terminal block | •Borne de raccordement | 3 | 8-pol |
| **46** | 1 | **487 1794-56** | •Fitting | •Garniture | 3 | |
| **47** | 8 | **725 2370-51** | •Screw | •Vis | | M6X20 |
| **48** | 1 | **487 1703-99** | •Capacitor | •Condensateur | 1,2 | 40µF 120V/1AC/ Working |
| | 1 | **487 1535-76** | •Capacitor | •Condensateur | 1,2 | 10µF 208-240V/1AC/ Working |

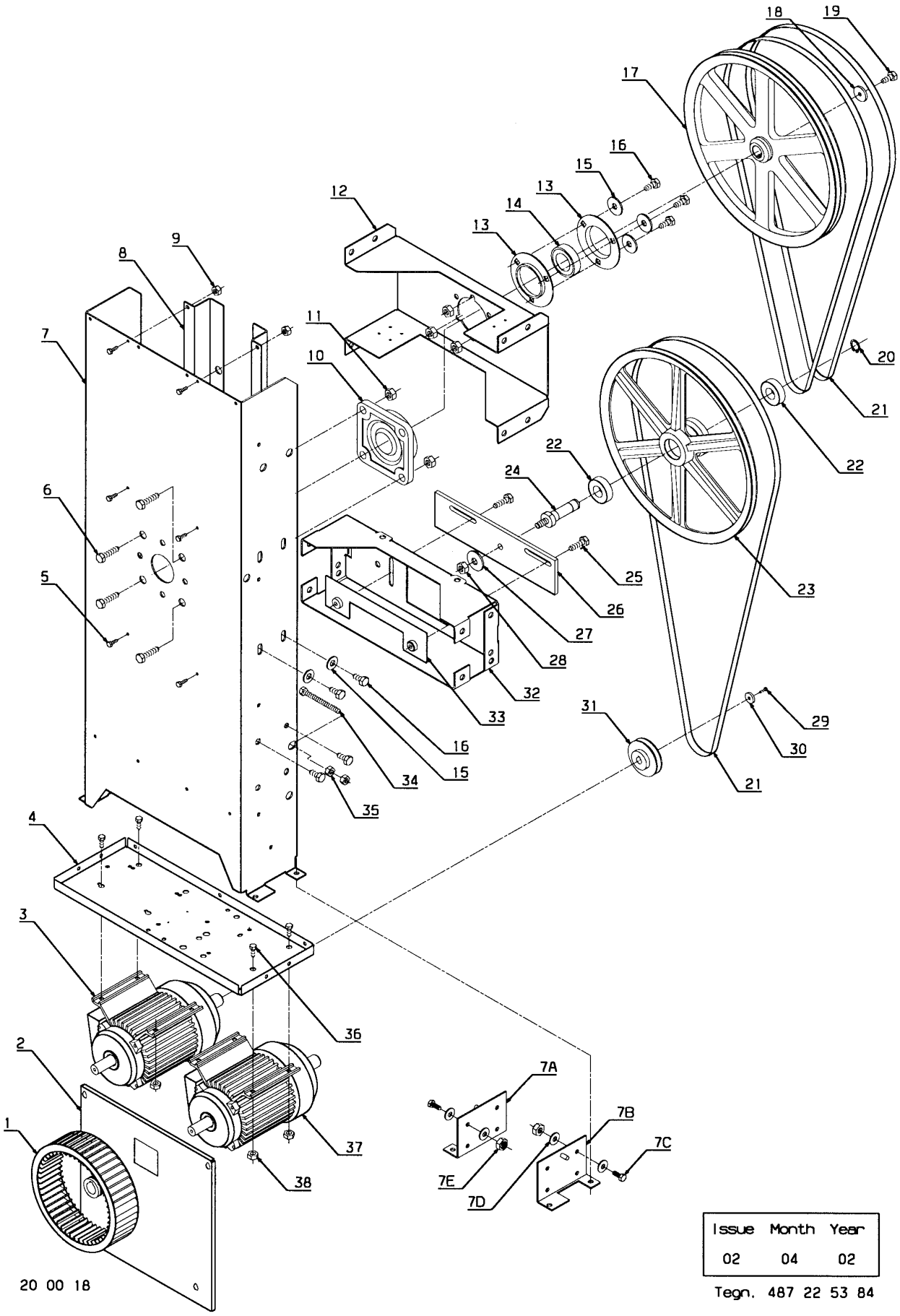


20 00 18

| Issue | Month | Year |
|---|---|---|
| 02 | 04 | 02 |

Tegn. 487 22 53 84

**TD75 0012/2093-20750/6061**

**Motor alternative**

**Alternative moteur**

| Illustration | Issue | Month | Year |
|---|---|---|---|
| Schéma | Issue | Month | Year |
| **200018/2** | **7** | **11** | **2004** |

| Item<br>Article | Qua<br>Qua | Art.No<br>Réf. article | Description | Description | Info<br>Info | Notes<br>Remarques |
|---|---|---|---|---|---|---|
| **1** | 1 | **487 1976-74** | Fan wheel | Poulie ventilateur | 3 | Ø180 Complete |
| **2** | 1 | **487 1695-87** | Flange | Bride | 3 | |
| **3** | 1 | **487 2358-70** | Motor | Moteur | 1,2 | 120V 1AC 60Hz Drum |
| | 1 | **487 1976-40** | Motor | Moteur | 1,2 | 208-240V 1AC 60Hz Drum -0502/003878 |
| * | 1 | **487 1935-78** | Motor | Moteur | 1,2 | 208-240V 1AC 60Hz, Drum 0502/003879- |
| * | 1 | **487 1935-77** | Motor | Moteur | 1,2 | 208-240V 3AC 60Hz, Drum |
| **4** | 1 | **487 1816-79** | Motor bracket | Appui de moteur | 3 | |
| **5** | 8 | **725 2366-51** | Screw | Vis | | M6X12 |
| **6** | 4 | **725 2538-51** | Screw | Vis | | M12X35 |
| **7** | 1 | **487 1816-78** | Column | Colonne | 3 | |
| | 1 | **487 1972-09** | Column | Colonne | 3 | Complete -0203/003497 |
| **7A** | 1 | **487 2204-03** | •Fitting | •Garniture | 3 | Left -0203/003497 |
| **7B** | 1 | **487 2204-01** | •Fitting | •Garniture | 3 | Right -0203/003497 |
| **7C** | 8 | **725 2451-51** | •Screw | •Vis | | M8X20 |
| **7D** | 16 | **734 1164-31** | •Disc | •Disque | | M8 |
| **7E** | 8 | **732 2118-01** | •Locking nut | •Contre-écrou | | M8 |
| **8** | 2 | **487 1829-50** | Reinforcement | Renforcement | 3 | |
| **9** | 8 | **731 2316-01** | Nut | Écrou | | M6 |
| **10** | 1 | **487 1695-54** | Bearing house with bearing | Logement de palier avec palier | 1,2 | |
| **11** | 4 | **731 2322-01** | Nut | Écrou | | M12 |
| **12** | 1 | **487 1820-30** | Bracket | Support | 3 | |
| **13** | 1 | **487 1694-48** | Bearing disc | Disque de roulement | 3 | |
| **14** | 1 | **487 1695-53** | Bearing | Coussinet | 1,2 | |
| **15** | 8 | **734 1173-01** | Disc | Disque | | Ø10,5/Ø21 |
| **16** | 8 | **488 0142-20** | Bolt | Boulon | 3 | M10X20 |
| **17** | 1 | **471 1764-74** | Drum, transmission complete | Tambour, transmission complet | 3 | Galvanised |
| | 1 | **471 1764-75** | Drum, transmission complete | Tambour, transmission complet | 3 | Stainless |
| | 1 | **471 1764-78** | Drum, transmission complete | Tambour, transmission complet | 3 | Galvanised Moisture sensor |
| | 1 | **471 1764-79** | Drum, transmission complete | Tambour, transmission complet | 3 | Stainless Moisture sensor |
| | 1 | **487 0151-14** | •Pulley | •Poulie | 3 | |
| **18** | 1 | **488 0142-30** | •Screw | •Vis | 3 | M10X30 |
| **19** | 1 | **487 0151-86** | •Disc | •Disque | 3 | Ø10,5/Ø44,5X4 |
| **20** | 1 | **735 3122-00** | C-clamp | Attache en forme C | 3 | D20 |
| **21** | 3 | **487 1831-79** | V-belt | Courroie trapézoïdale | 3 | |
| **22** | 2 | **738 2104-04** | Ball bearing | Roulement à billes | 1,2 | |
| **23** | 1 | **487 1831-05** | Pulley | Poulie | 3 | 50/60Hz |
| **24** | 1 | **487 1694-35** | Shaft | Axe | 3 | |
| **25** | 2 | **725 2497-51** | Screw | Vis | | M10X35 |
| **26** | 1 | **487 1829-74** | Plate | Plaque | 3 | |
| **27** | 1 | **487 0151-86** | Disc | Disque | 3 | Ø10,5/Ø44,5X4 |
| **28** | 1 | **731 2322-01** | Nut | Écrou | | M12 |
| **29** | 1 | **488 0139-16** | Screw | Vis | 3 | M5X16 |
| **30** | 1 | **471 9018-51** | Disc | Disque | 3 | Ø6,4/ Ø22 |
| **31** | 1 | **487 1695-03** | Pulley | Poulie | 3 | 60Hz |
| **32** | 1 | **487 1829-53** | Spacer | Entretoise | 3 | |
| **33** | 1 | **487 1694-34** | Plate | Plaque | 3 | |
| **34** | 1 | **488 0118-99** | Screw | Vis | 3 | M8X100 |
| **35** | 6 | **731 2318-01** | Nut | Écrou | | M8 |

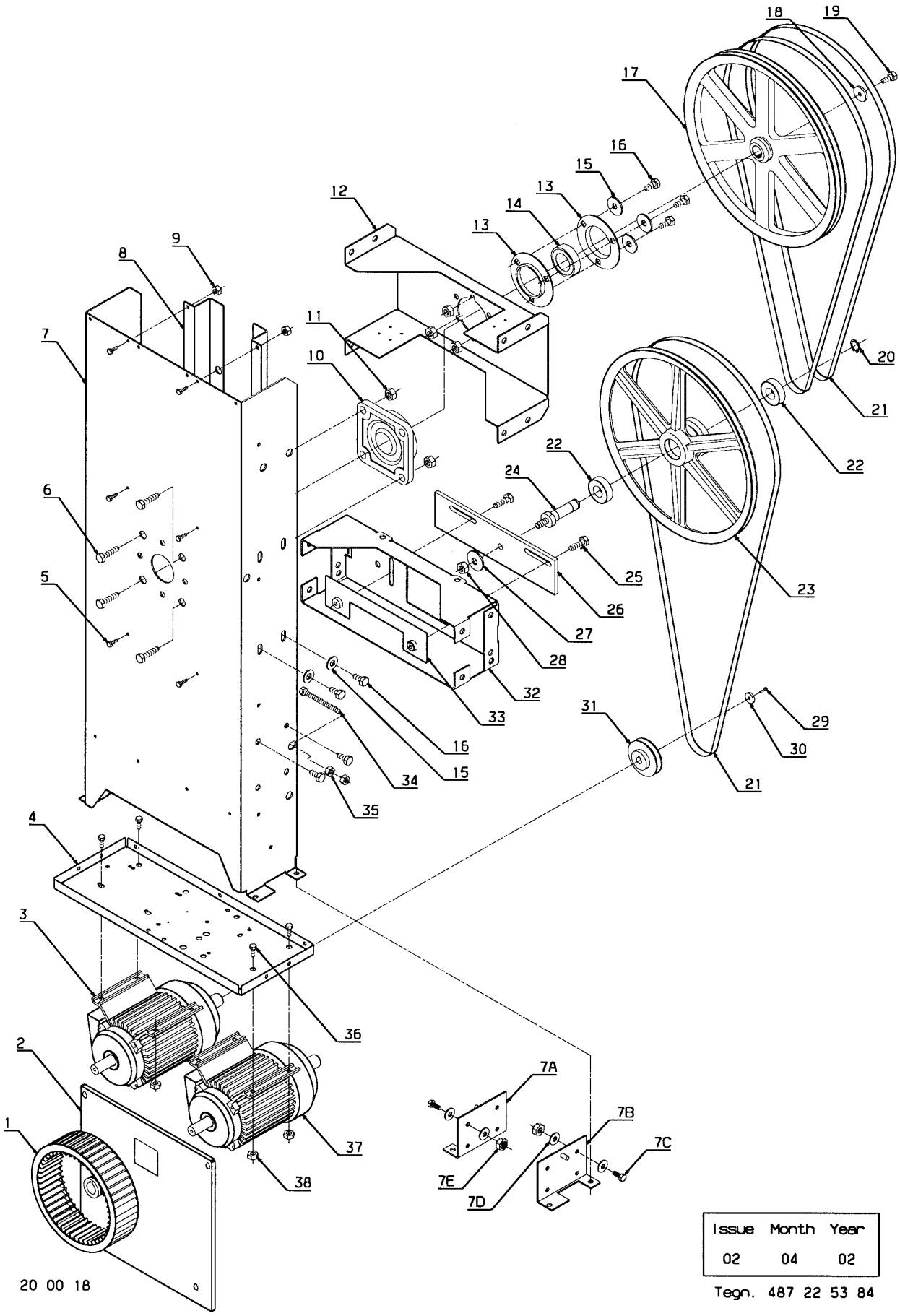


20 00 18

| Issue | Month | Year |
|---|---|---|
| 02 | 04 | 02 |

Tegn. 487 22 53 84

**TD75 0012/2093-20750/6061**

**Motor alternative**

**Alternative moteur**

| Illustration | Issue | Month | Year |
|---|---|---|---|
| Schéma | Issue | Month | Year |
| **200018/2** | **7** | **11** | **2004** |

| Item<br>Article | Qua<br>Qua | Art.No<br>Réf. article | Description | Description | Info<br>Info | Notes<br>Remarques |
|---|---|---|---|---|---|---|
| **36** | 8 | **725 2370-51** | Screw | Vis | | M6X20 |
| **37** | 1 | **487 1935-11** | Motor | Moteur | 1,2 | 120V 1AC 60Hz Complete Fan wheel |
| | 1 | **487 1976-41** | Motor | Moteur | 1,2 | 208-240V 1AC 60Hz Fan wheel -0502/003878 |
| * | 1 | **487 1935-79** | Motor | Moteur | 1,2 | 208-240V 1AC 60Hz Fan wheel 0502/003879- |
| * | 1 | **487 1935-81** | Motor | Moteur | 1,2 | 208-240V 3AC 60Hz, Fan wheel |
| **38** | 8 | **732 2116-01** | Locking nut | Contre-écrou | | M6 |

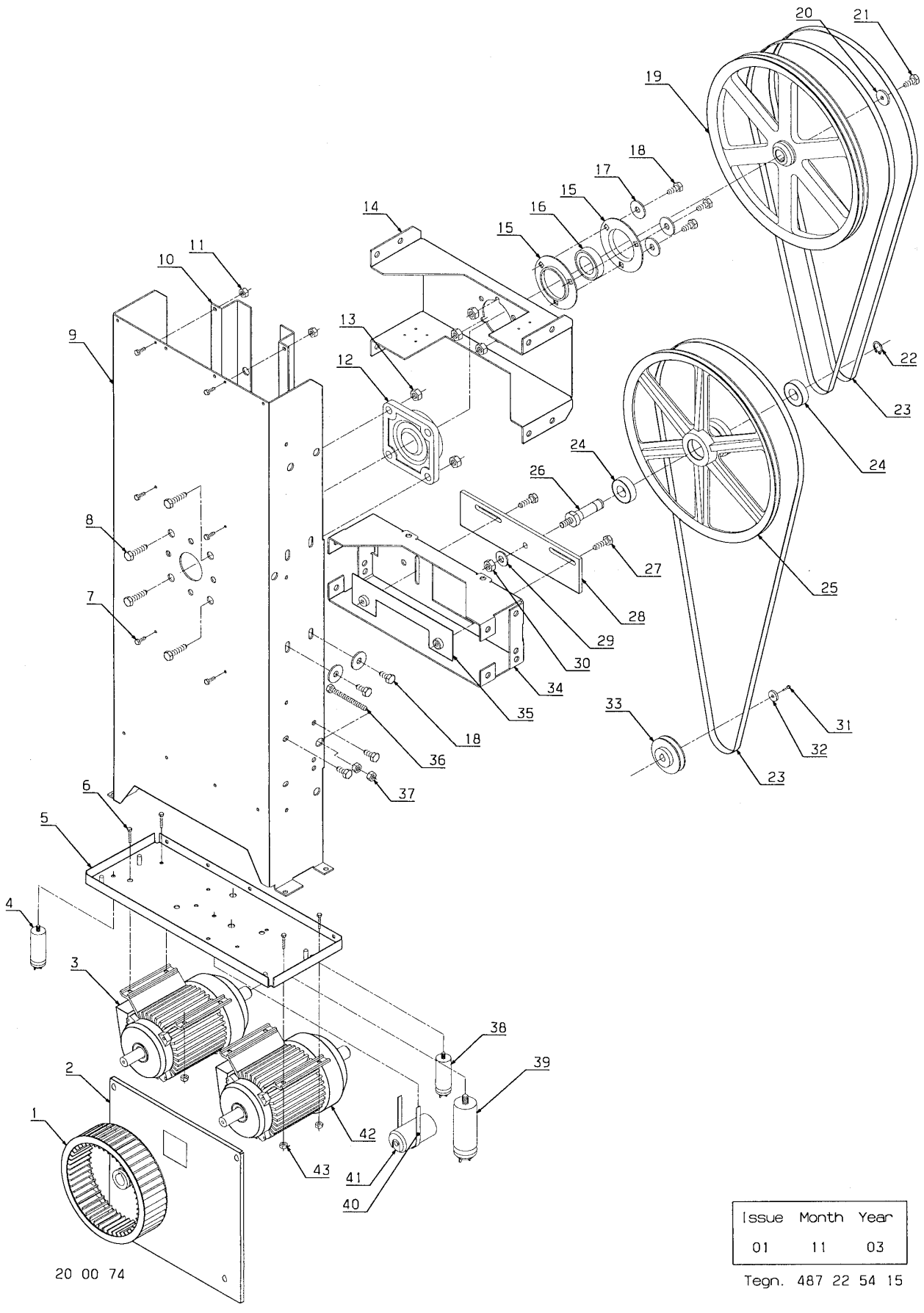


20 00 74

| Issue | Month | Year |
|---|---|---|
| 01 | 11 | 03 |

Tegn. 487 22 54 15

**TD75 20750/6062-**

**Motor alternative**

**Alternative moteur**

| Illustration | Issue | Month | Year |
|---|---|---|---|
| Schéma | Issue | Month | Year |
| **200074/1** | **2** | **11** | **2004** |

| Item<br>Article | Qua<br>Qua | Art.No<br>Réf. article | Description | Description | Info<br>Info | Notes<br>Remarques |
|---|---|---|---|---|---|---|
| **1** | 1 | **487 1976-74** | Fan wheel | Poulie ventilateur | 3 | Ø180 |
| **2** | 1 | **487 1695-87** | Flange | Bride | 3 | |
| * **3** | 1 | **487 1935-76** | Motor | Moteur | 1,2 | 120V 1AC 60Hz, Drum |
| * | 1 | **487 1935-78** | Motor | Moteur | 1,2 | 208-240V 1AC 60Hz, Drum |
| * | 1 | **487 1935-77** | Motor | Moteur | 1,2 | 208-240V 3AC 60Hz, Drum |
| * | 1 | **487 1935-84** | Motor | Moteur | 1,2 | 208-240V/400-480V 3AC 50/60Hz, Drum |
| **4** | 1 | **487 1703-99** | Capacitor | Condensateur | 1,2 | 40µF 120V/1AC/ Working |
| | 1 | **487 1535-76** | Capacitor | Condensateur | 1,2 | 10µF 208-240V/1AC/ Working |
| **5** | 1 | **487 2368-32** | Motor bracket | Appui de moteur | 3 | |
| **6** | 8 | **725 2370-51** | Screw | Vis | | M6X20 |
| **7** | 8 | **725 2366-51** | Screw | Vis | | M6X12 |
| **8** | 4 | **725 2538-51** | Screw | Vis | | M12X35 |
| **9** | 1 | **487 1816-78** | Column | Colonne | 3 | |
| **10** | 2 | **487 1829-50** | Reinforcement | Renforcement | 3 | |
| **11** | 12 | **731 2324-01** | Nut | Écrou | | M16 |
| **12** | 1 | **487 1695-54** | Bearing house with bearing | Logement de palier avec palier | 1,2 | |
| **13** | 4 | **731 2322-01** | Nut | Écrou | | M12 |
| **14** | 1 | **487 1820-30** | Bracket | Support | 3 | |
| **15** | 1 | **487 1694-48** | Bearing disc | Disque de roulement | 3 | |
| **16** | 1 | **487 1695-53** | Bearing | Coussinet | 1,2 | |
| **17** | 8 | **734 1173-01** | Disc | Disque | 3 | Ø10,5/Ø21 |
| **18** | 16 | **488 0142-20** | Bolt | Boulon | 3 | M10X20 |
| **19** | 1 | **487 0151-14** | Pulley | Poulie | 3 | |
| **20** | 1 | **487 0151-86** | Disc | Disque | 3 | Ø10,5/Ø44,5X4 |
| **21** | 1 | **488 0142-30** | Screw | Vis | 3 | M10X30 |
| **22** | 1 | **735 3122-00** | C-clamp | Attache en forme C | 3 | D20 |
| **23** | 3 | **487 1831-79** | V-belt | Courroie trapézoïdale | 3 | |
| **24** | 2 | **738 2104-04** | Ball bearing | Roulement à billes | 1,2 | |
| **25** | 1 | **487 1831-05** | Pulley | Poulie | 3 | 50/60Hz |
| **26** | 1 | **487 1694-35** | Shaft | Axe | 3 | |
| **27** | 2 | **725 2497-51** | Screw | Vis | | M10X35 |
| **28** | 1 | **487 1829-74** | Plate | Plaque | 3 | |
| **29** | 1 | **487 0151-86** | Disc | Disque | 3 | Ø10,5/Ø44,5X4 |
| **30** | 1 | **731 2322-01** | Nut | Écrou | | M12 |
| **31** | 1 | **488 0139-16** | Screw | Vis | 3 | M5X16 |
| **32** | 1 | **471 9018-51** | Disc | Disque | 3 | Ø6,4/ Ø22 |
| **33** | 1 | **487 1897-62** | Pulley | Poulie | 3 | 60Hz |
| **34** | 1 | **487 1829-53** | Spacer | Entretoise | 3 | |
| **35** | 1 | **487 1694-34** | Plate | Plaque | 3 | |
| **36** | 1 | **488 0118-99** | Screw | Vis | 3 | M8X100 |
| **37** | 6 | **731 2318-01** | Nut | Écrou | | M8 |
| **38** | 1 | **487 1703-98** | Capacitor | Condensateur | 1,2 | 70µF 120V/1AC/ Working |
| | 1 | **487 1899-91** | Capacitor | Condensateur | 1,2 | 16µF 208-240V/1AC/ Working |
| **39** | 1 | **487 0289-51** | Capacitor | Condensateur | 1,2 | 80µF 120V/ 1AC/ Start |
| | 1 | **471 9525-26** | Capacitor | Condensateur | 1,2 | 25µF 208-240V/1AC/ Start |
| **40** | 1 | **487 1694-18** | Cable tie | Collier de serrage | 3 | |
| **41** | 1 | **471 9566-01** | Relay | Relais | 1,2 | 120V/ 1AC/ Start |
| | 1 | **471 9566-05** | Relay | Relais | 1,2 | 208-240V/1AC/ Start |
| * **42** | 1 | **487 1935-80** | Motor | Moteur | 1,2 | 120V 1AC 60Hz, Fan wheel |
| * | 1 | **487 1935-79** | Motor | Moteur | 1,2 | 208-240V 1AC 60Hz Fan wheel |
| * | 1 | **487 1935-81** | Motor | Moteur | 1,2 | 208-240V 3AC 60Hz, Fan wheel |
| * | 1 | **487 1935-86** | Motor | Moteur | 1,2 | 208-240V/400-480V 3AC 50/60Hz, Fan wheel |
| **43** | 8 | **732 2116-01** | Locking nut | Contre-écrou | | M6 |

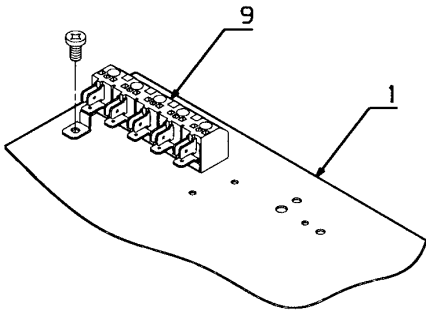


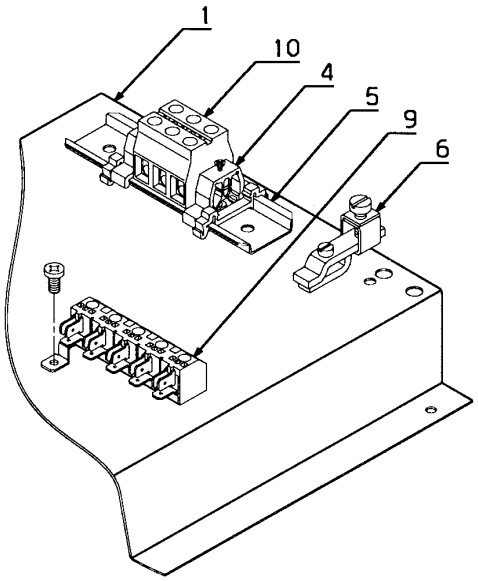


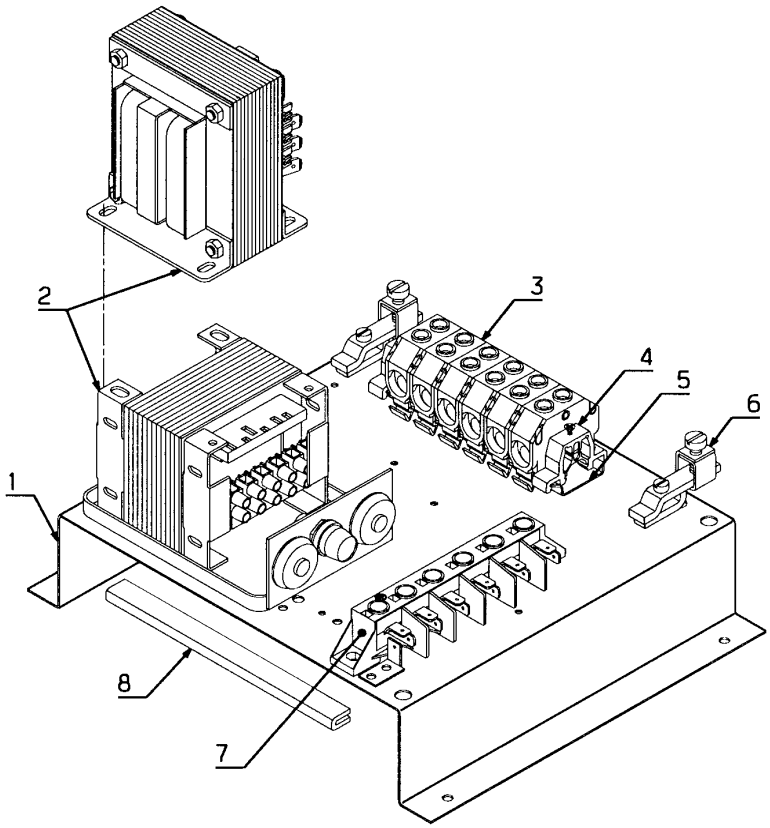


| Issue | Month | Year |
|---|---|---|
| 01 | 02 | 00 |

10 15 98

Tegn. 487 18 96 26

**TD75 -0009/1733**

**Connection unit**

**Connexion**

| Illustration | Issue | Month | Year |
|---|---|---|---|
| Schéma | Issue | Month | Year |
| **101598/1** | **1** | **3** | **2000** |

| Item<br>Article | Qua<br>Qua | Art.No<br>Réf. article | Description | Description | Info<br>Info | Notes<br>Remarques |
|---|---|---|---|---|---|---|
| **1** | 1 | **487 1820-37** | Bracket | Console | 3 | |
| **2** | 1 | **471 9010-80** | Transformer | Transformateur | 1 | 400-440V |
| | 1 | **487 1535-42** | Transformer | Transformateur | 1 | 208-440V |
| **3** | RQ | **487 1385-09** | Terminal block | Borne de raccordement | 3 | |
| **4** | 1 | **487 1384-04** | End stop | Butée | 3 | |
| **5** | 1 | **488 8334-16** | Rail | Rail | 3 | |
| **6** | RQ | **762 7110-80** | Ground terminal | Borne de terre | 3 | |
| **7** | 1 | **489 7194-20** | Terminal block | Borne de raccordement | 3 | |
| **8** | 1 | **487 1730-00** | Profile | Profilé | 1 | |
| **9** | 1 | **471 8731-01** | Terminal block | Borne de raccordement | 3 | |
| **10** | 1 | **487 1384-02** | Connection clamp | Barrette de connexion | 3 | |

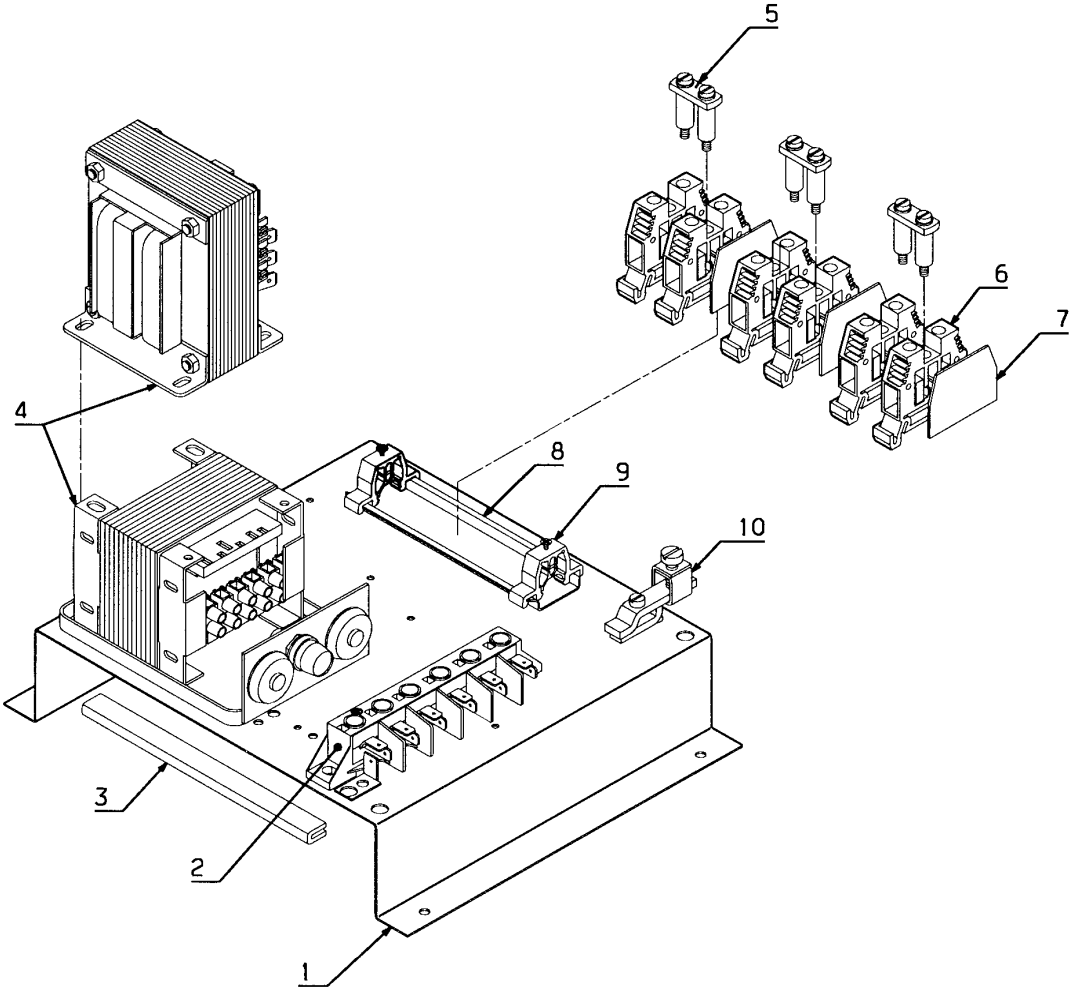


| Issue | Month | Year |
|---|---|---|
| 01 | 01 | 01 |

10 20 51

Tegn. 487 22 53 36

**TD75 0009/1734-20750/6061**

**Connection unit**

**Connexion**

| Illustration | Issue | Month | Year |
|---|---|---|---|
| Schéma | Issue | Month | Year |
| **102051/1** | **1** | **1** | **2001** |

| Item<br>Article | Qua<br>Qua | Art.No<br>Réf. article | Description | Description | Info<br>Info | Notes<br>Remarques |
|---|---|---|---|---|---|---|
| **1** | 1 | **487 1820-37** | Bracket | Console | 3 | |
| **2** | 1 | **489 7194-20** | Terminal block | Borne de raccordement | 3 | Steam |
| **3** | 1 | **487 1730-00** | Profile | Profilé | 1 | |
| **4** | 1 | **487 1535-42** | Transformer | Transformateur | 1 | 208-440V |
| | 1 | **471 9010-80** | Transformer | Transformateur | 1 | 400-440V |
| **5** | 3 | **487 2217-26** | Gromet | Oeillet | 3 | |
| **6** | 6 | **487 2217-24** | Terminal block | Borne de raccordement | 3 | |
| **7** | 3 | **487 2217-25** | End plate | Panneau arrière | 3 | |
| **8** | 1 | **488 8334-16** | Rail | Rail | 3 | |
| **9** | 2 | **487 1384-04** | End stop | Butée | 3 | |
| **10** | 1 | **762 7110-80** | Ground terminal | Borne de terre | 3 | |

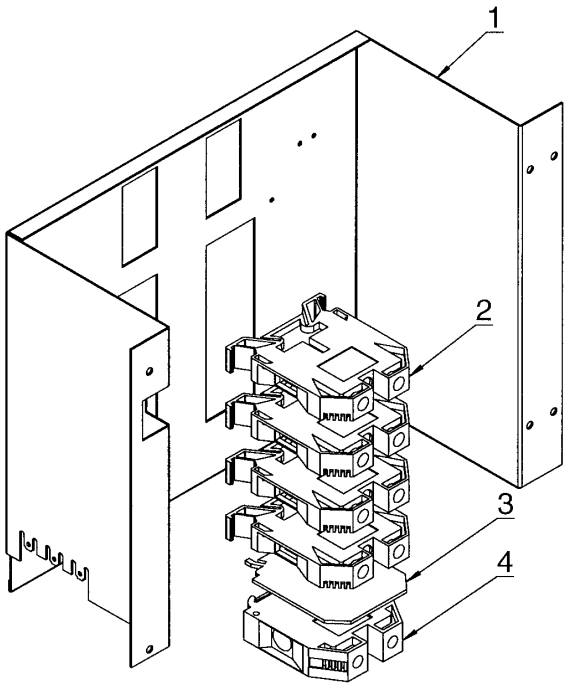


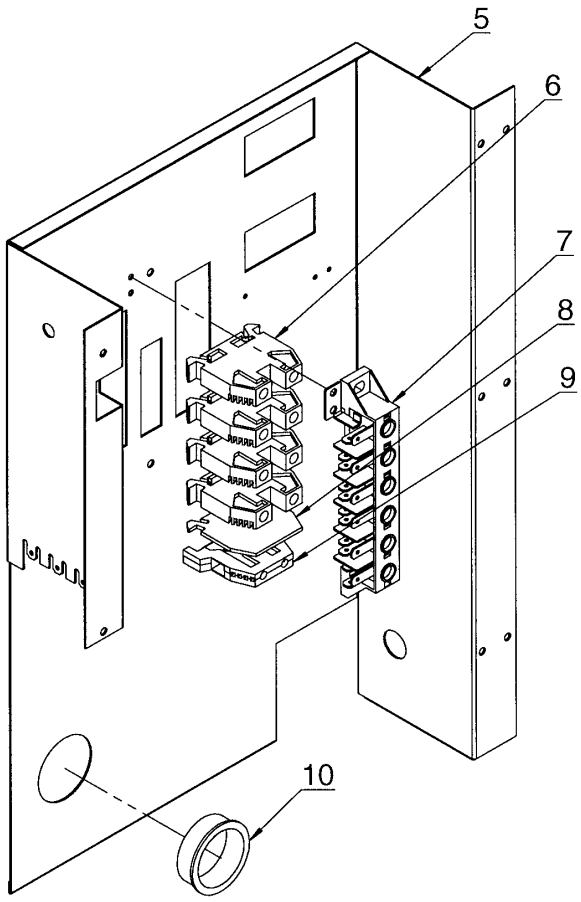


| Issue | Month | Year |
|---|---|---|
| 01 | 11 | 03 |

Tegn. 487 22 54 48

**TD75 20750/6062-**

**Connection unit**

**Connexion**

| Illustration | Issue | Month | Year |
|---|---|---|---|
| Schéma | Issue | Month | Year |
| **200107/1** | **1** | **11** | **2003** |

| Item<br>Article | Qua<br>Qua | Art.No<br>Réf. article | Description | Description | Info<br>Info | Notes<br>Remarques |
|---|---|---|---|---|---|---|
| **1** | 1 | **487 2368-07** | Connection console | Support de raccordement | 3 | Electric 200-240V |
| **2** | 4 | **487 2217-24** | Terminal block | Borne de raccordement | 3 | Electric 200-240V |
| **3** | 1 | **487 2217-25** | End plate | Panneau arrière | 3 | Electric 200-240V |
| **4** | 1 | **487 0289-23** | Ground terminal | Borne de terre | 3 | Electric 200-240V |
| **5** | 1 | **487 2368-31** | Connection console | Support de raccordement | 3 | Electric 400-480V + gas |
| | 1 | **487 2368-08** | Connection console | Support de raccordement | 3 | Steam |
| **6** | 4 | **487 2217-20** | Terminal block | Borne de raccordement | 3 | Electric 400-480V |
| **7** | 1 | **489 7194-20** | Terminal block | Borne de raccordement | 3 | Gas + steam |
| **8** | 1 | **487 2217-21** | End plate | Panneau arrière | 3 | Electric 400-480V |
| **9** | 1 | **487 0289-22** | Ground terminal | Borne de terre | 3 | Electric 400-480V |
| **10** | 1 | **762 1212-10** | Cable gland | Passe-fil | 3 | Ø38,1 Steam |

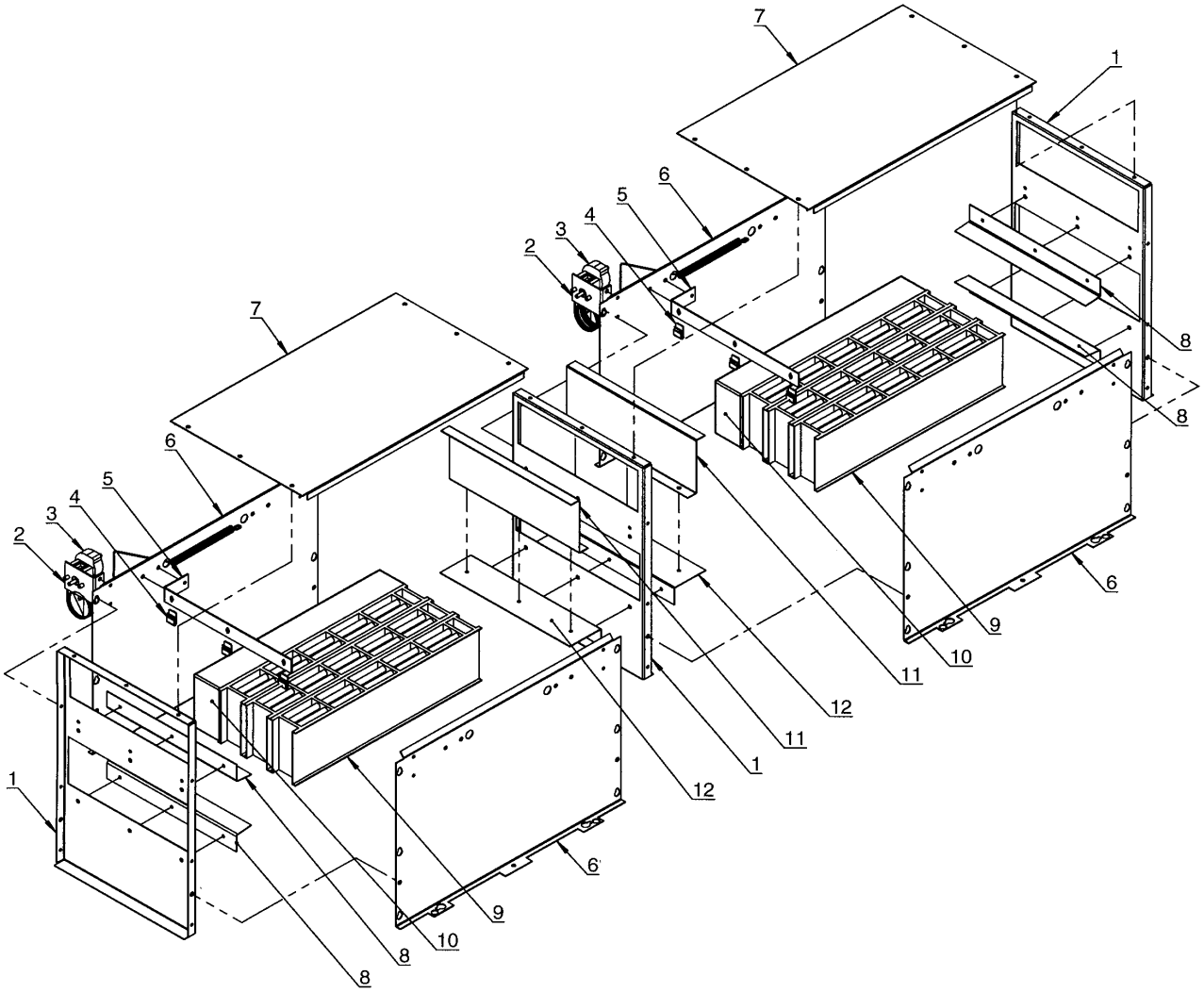


| Issue | Month | Year |
|---|---|---|
| 02 | 11 | 03 |

10 15 16

Tegn. 487 18 96 40

**TD75 -0211/004644**

**Heating unit, electric**

**Unité de chauffage, électrique**

| Illustration | Issue | Month | Year |
|---|---|---|---|
| Schéma | Issue | Month | Year |
| **101516/2** | **3** | **11** | **2004** |

| Item<br>Article | Qua<br>Qua | Art.No<br>Réf. article | Description | Description | Info<br>Info | Notes<br>Remarques |
|---|---|---|---|---|---|---|
| **1** | 3 | **487 1781-11** | Cover plate | Plaque recouvrement | 3 | |
| **2** | 2 | **487 1781-09** | Bracket | Support | 3 | |
| **3** | 2 | **487 1697-07** | Overheat protection | Protection supérieure | 1,2 | 175ºC |
| **4** | 6 | **471 7854-02** | Clips | Colliers de serrage | 3 | |
| **5** | 2 | **487 1781-18** | Bracket | Support | 3 | |
| **6** | 4 | **487 1781-04** | Side plate | Plaque de côté | 3 | |
| **7** | 2 | **487 1781-13** | Top panel | Panneau supérieur | 3 | |
| **8** | 4 | **487 1781-15** | Bracket | Support | 3 | |
| * **9** | RQ | **487 1715-89** | Heating element | Élément chauffant | 1,2 | 440/254V 4,5KW |
| * | RQ | **487 1715-91** | Heating element | Élément chauffant | 1,2 | 480V/277V 4,5kW |
| * | RQ | **487 1715-85** | Heating element | Élément chauffant | 1,2 | 415V/240V 6kW |
| * | RQ | **487 1715-86** | Heating element | Élément chauffant | 1,2 | 440/254V 6kW |
| * | RQ | **487 1715-90** | Heating element | Élément chauffant | 1,2 | 480V/277V 6kW |
| **10** | 2 | **487 1781-19** | Air reducing plate | Tôle de réduction | 3 | |
| **11** | 2 | **487 1781-17** | Clamp | Collier | 3 | |
| **12** | 2 | **487 1781-16** | Bracket | Support | 3 | 30kW |
| | 2 | **487 1831-11** | Bracket | Support | 3 | 36kW |

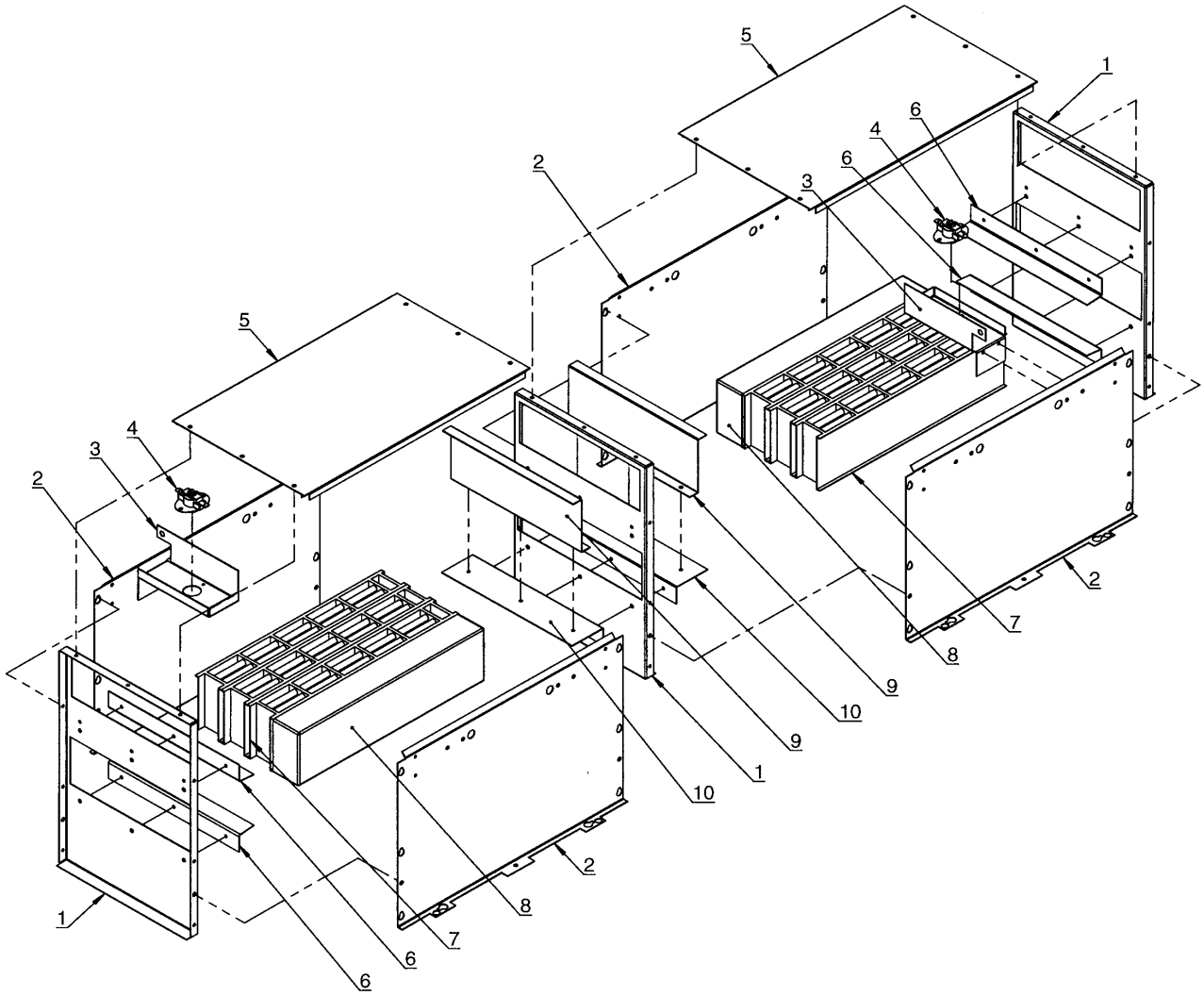


| Issue | Month | Year |
|---|---|---|
| 01 | 04 | 04 |

Tegn. 487 22 54 99

**TD75 0211/4645-20750/6061**

**Heating unit, electric**

**Unité de chauffage, électrique**

| Illustration | Issue | Month | Year |
|---|---|---|---|
| Schéma | Issue | Month | Year |
| **200158/1** | **2** | **11** | **2004** |

| Item<br>Article | Qua<br>Qua | Art.No<br>Réf. article | Description | Description | Info<br>Info | Notes<br>Remarques |
|---|---|---|---|---|---|---|
| **1** | 3 | **487 1781-11** | Cover plate | Plaque recouvrement | 3 | |
| **2** | 4 | **487 1781-04** | Side plate | Plaque de côté | 3 | |
| **3** | 2 | **487 1781-22** | Bracket | Console | 3 | |
| **4** | 2 | **487 1697-07** | Overheat protection | Protection supérieure | 1,2 | 175ºC |
| **5** | 2 | **487 1781-13** | Top panel | Panneau supérieur | 3 | |
| **6** | 4 | **487 1781-15** | Bracket | Support | 3 | |
| * **7** | RQ | **487 1715-89** | Heating element | Élément chauffant | 1,2 | 440/254V 4,5KW |
| * | RQ | **487 1715-91** | Heating element | Élément chauffant | 1,2 | 480V/277V 4,5kW |
| * | RQ | **487 1715-85** | Heating element | Élément chauffant | 1,2 | 415V/240V 6kW |
| * | RQ | **487 1715-86** | Heating element | Élément chauffant | 1,2 | 440/254V 6kW |
| * | RQ | **487 1715-90** | Heating element | Élément chauffant | 1,2 | 480V/277V 6kW |
| **8** | 2 | **487 1781-19** | Air reducing plate | Tôle de réduction | 3 | |
| **9** | 2 | **487 1781-17** | Clamp | Collier | 3 | |
| **10** | 2 | **487 1781-16** | Bracket | Support | 3 | |
| | 2 | **487 1831-11** | Bracket | Support | 3 | |

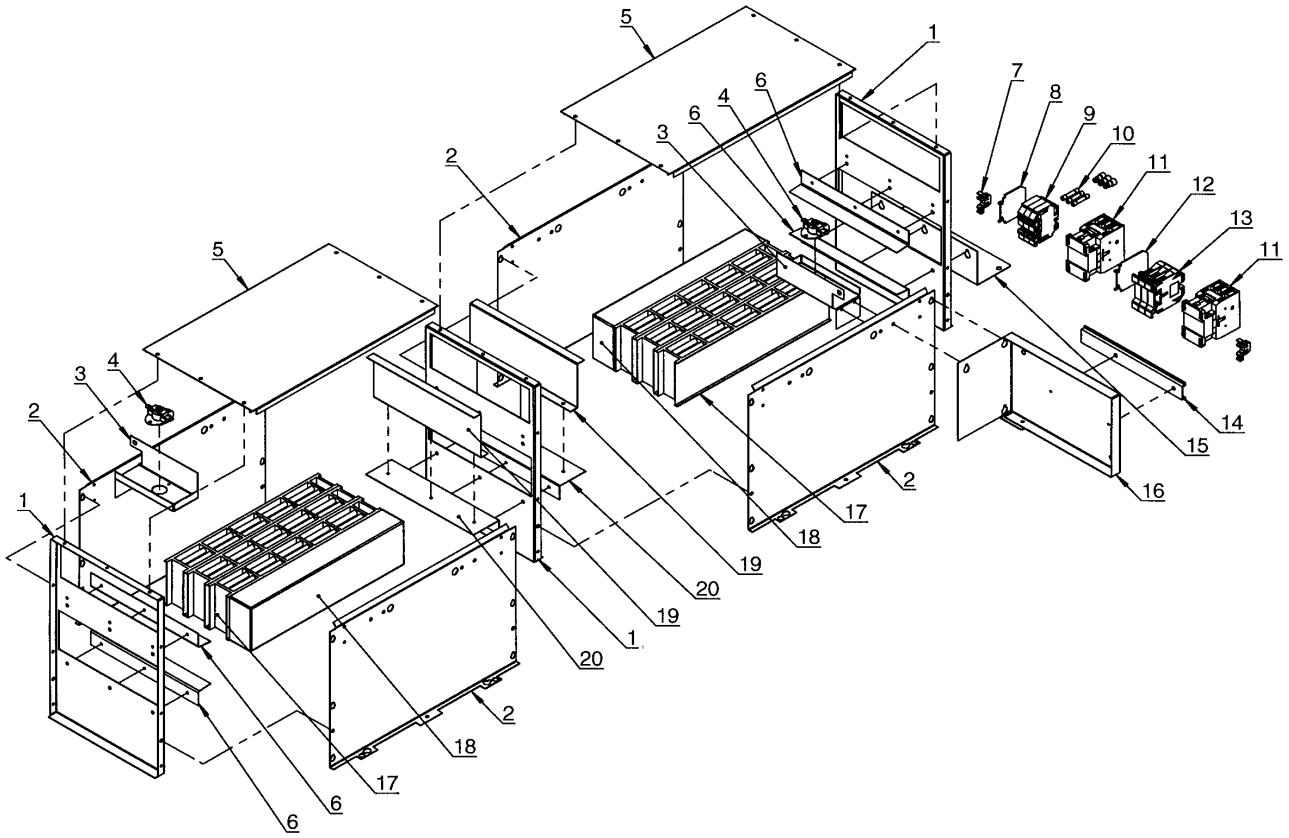


| Issue | Month | Year |
|---|---|---|
| 02 | 02 | 04 |

Tegn. 487 22 54 49

20 01 08

**TD75 20750/6062-**

**Heating unit, electric**

**Unité de chauffage, électrique**

| Illustration | Issue | Month | Year |
|---|---|---|---|
| Schéma | Issue | Month | Year |
| **200108/1** | **2** | **11** | **2004** |

| Item<br>Article | Qua<br>Qua | Art.No<br>Réf. article | Description | Description | Info<br>Info | Notes<br>Remarques |
|---|---|---|---|---|---|---|
| **1** | 3 | **487 1781-11** | Cover plate | Plaque recouvrement | 3 | |
| **2** | 4 | **487 1781-04** | Side plate | Plaque de côté | 3 | |
| **3** | 2 | **487 1781-22** | Bracket | Console | 3 | |
| **4** | 2 | **487 1697-07** | Overheat protection | Protection supérieure | 1,2 | 175ºC |
| **5** | 2 | **487 1781-13** | Top panel | Panneau supérieur | 3 | |
| **6** | 4 | **487 1781-15** | Bracket | Support | 3 | |
| **7** | 2 | **487 1384-04** | End stop | Butée | 3 | |
| **8** | 1 | **487 0154-11** | End part | Plaque désenclenchement | 3 | |
| **9** | 3 | **487 0154-10** | Fuse holder | Porte-fusible | 3 | |
| **10** | 3 | **487 0289-29** | Fuse | Fusible | 1,2 | T10A |
| **11** | RQ | **438 9637-31** | Relay | Relais | 1,2 | |
| **12** | 1 | **487 2217-25** | End plate | Panneau arrière | 3 | 200-240V |
| **13** | 3 | **487 2217-24** | Terminal block | Borne de raccordement | 3 | 200-240V |
| **14** | 1 | **487 0289-36** | Rail | Rail | 3 | L=235 |
| **15** | 1 | **487 2368-34** | Shelf | Planche | 3 | |
| **16** | 1 | **487 2368-19** | Bracket | Console | 3 | 200-240V |
| | 1 | **487 2368-22** | Bracket | Console | 3 | 400-480V |
| * **17** | RQ | **487 1715-89** | Heating element | Élément chauffant | 1,2 | 440/254V 4,5KW |
| * | RQ | **487 1715-91** | Heating element | Élément chauffant | 1,2 | 480V/277V 4,5kW |
| * | RQ | **487 1715-85** | Heating element | Élément chauffant | 1,2 | 415V/240V 6kW |
| * | RQ | **487 1715-86** | Heating element | Élément chauffant | 1,2 | 440/254V 6kW |
| * | RQ | **487 1715-90** | Heating element | Élément chauffant | 1,2 | 480V/277V 6kW |
| **18** | 2 | **487 1781-19** | Air reducing plate | Tôle de réduction | 3 | |
| **19** | 2 | **487 1781-17** | Clamp | Collier | 3 | |
| **20** | 2 | **487 1781-16** | Bracket | Support | 3 | 30kW |
| | 2 | **487 1831-11** | Bracket | Support | 3 | 36kW |

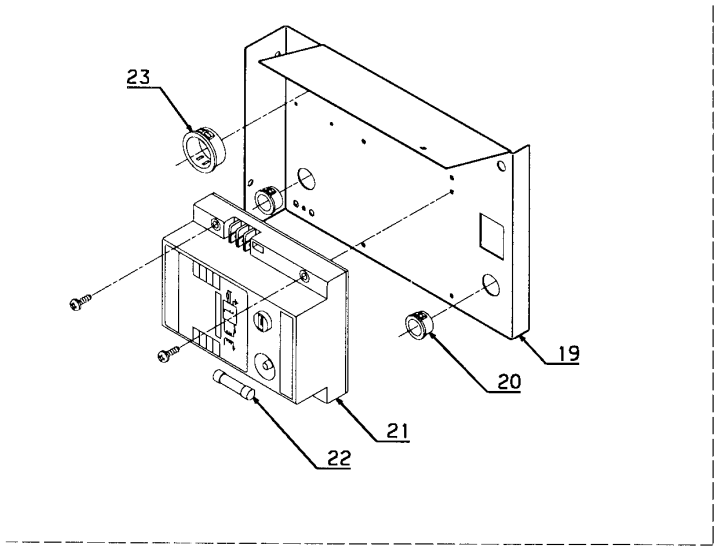


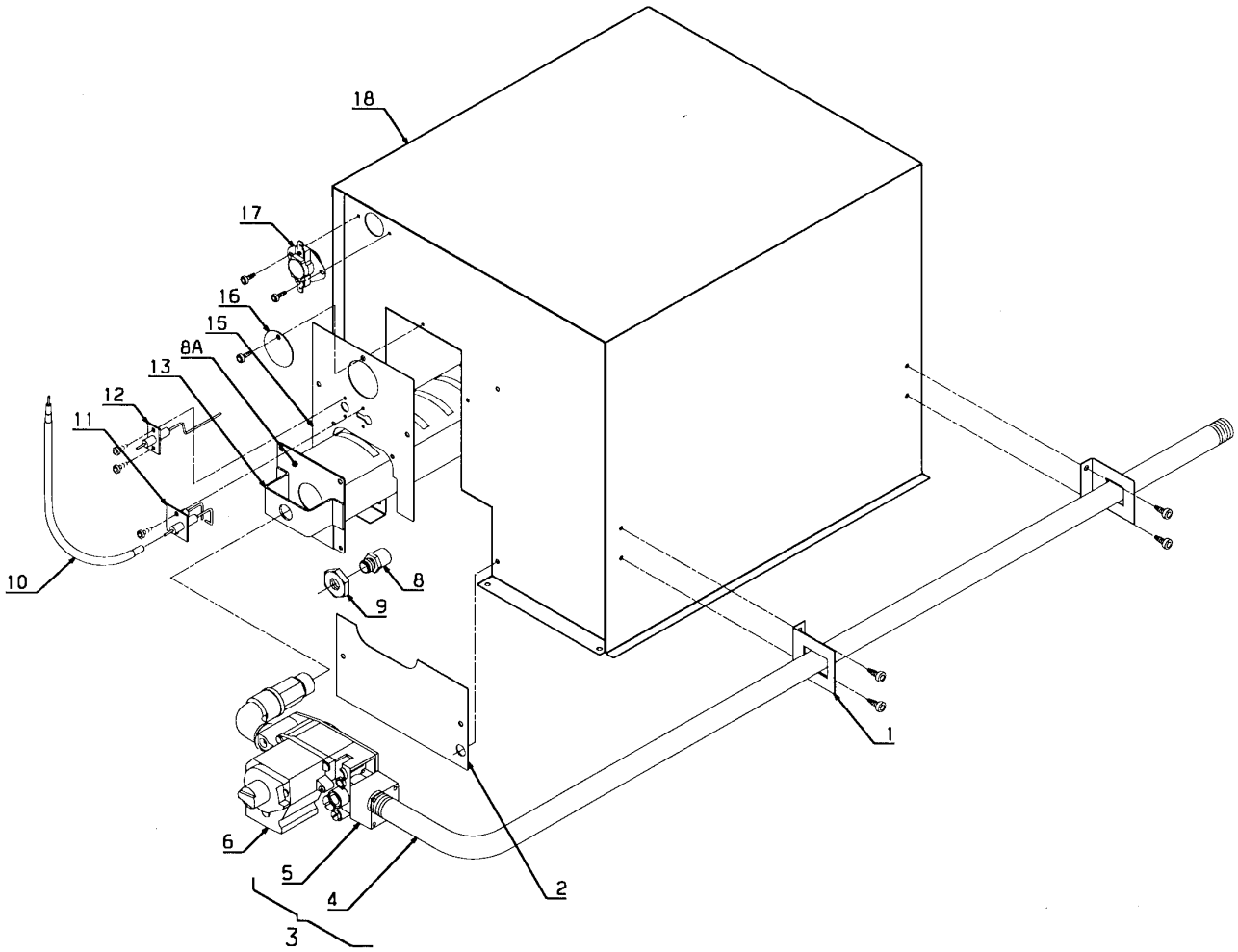


| Issue | Month | Year |
|---|---|---|
| 06 | 02 | 03 |

Tegn. 487 18 96 35

10 15 55

**TD75 -20750/6061**

**Heating unit, gas**

**Unité de chauffage, gaz**

| Illustration | Issue | Month | Year |
|---|---|---|---|
| Schéma | Issue | Month | Year |
| **101555/6** | **9** | **11** | **2003** |

| Item<br>Article | Qua<br>Qua | Art.No<br>Réf. article | Description | Description | Info<br>Info | Notes<br>Remarques |
|---|---|---|---|---|---|---|
| **1** | 2 | **487 1701-46** | Bracket | Support | 3 | 3/4" |
| **2** | 1 | **487 1815-01** | Cover plate | Plaque recouvrement | 3 | |
| **3** | 1 | **487 1973-38** | Gas valve with pipe | Vanne de gaz avec tube | 3 | Complete |
| **4** | 1 | **487 1437-18** | •Pipe | •Tube | 3 | |
| **5** | 1 | **487 1897-22** | •Flange | •Bride | 3 | 3/4" |
| **6** | 1 | **487 1816-89** | Gas valve | Vanne de gaz | 1,2 | Complete |
| **7** | | | | | | Not used |
| **8** | 1 | **487 1815-04** | Kit. LPG conversion | Kit. LPG conversion | 3 | |
| | 1 | **471 9853-48** | •Nozzle | •Buse | 1,2 | Ø3,5 0-1999FT, LPG |
| | 1 | **487 1815-28** | Kit. LPG conversion | Kit. LPG conversion | 3 | |
| | 1 | **471 9853-58** | •Nozzle | •Buse | 1,2 | Ø3,4 2000-3999FT, LPG |
| | 1 | **487 1815-29** | Kit. LPG conversion | Kit. LPG conversion | 3 | |
| | 1 | **471 9853-82** | •Nozzle | •Buse | 1,2 | Ø3,2 4000-5999FT, LPG |
| | 1 | **487 1815-30** | Kit. LPG conversion | Kit. LPG conversion | 3 | |
| | 1 | **471 9853-57** | •Nozzle | •Buse | 1,2 | Ø3,1 6000-8000FT, LPG |
| | 1 | **471 9853-95** | Nozzle | Buse | 1,2 | Ø5,8 0-1999FT, GNH |
| | 1 | **471 9853-81** | Nozzle | Buse | 1,2 | Ø5,6 2000-3999FT, GNH |
| | 1 | **471 9853-87** | Nozzle | Buse | 1,2 | Ø5,4 4000-5999FT, GNH |
| | 1 | **471 9853-90** | Nozzle | Buse | 1,2 | Ø5,2 6000-8000FT, GNH |
| | 1 | **471 9853-50** | Nozzle | Buse | 1,2 | Ø6,5 GNH |
| **8A** | | **487 1533-97** | •Air reducing plate | •Tôle de réduction | 3 | Ø32 |
| **9** | 1 | **471 8400-06** | Nut | Écrou | 3 | R3/8" 22NV H5 |
| **10** | 1 | **487 1897-14** | Ignition cable | Câble d'allumage | 3 | Gnist |
| **11** | 1 | **487 0068-24** | Elektrode | Électrode | 3 | |
| **12** | 1 | **487 0068-28** | Sensor | Détecteur | 3 | |
| **13** | 1 | **471 9869-18** | Gas burner | Radiateur à gaz | 3 | 54kW |
| **14** | | | | | | Not used |
| **15** | 1 | **487 1764-09** | Bracket | Support | 3 | 50Hz |
| **16** | 1 | **487 1701-22** | Cover | Couvercle | 3 | |
| **17** | 1 | **471 8815-04** | Thermostat | Thermostat | 1,2 | 150°C |
| **18** | 1 | **487 1935-39** | Combustion chamber | Chambre de combustion | 3 | |
| **19** | 1 | **487 1897-86** | Bracket | Support | 3 | |
| **20** | 1 | **762 1137-10** | Cable gland | Passe-fil | 3 | Ø28 |
| **21** | 1 | **487 1897-10** | Control box | Boîtier de contrôle | 1,2 | 24V |
| **22** | 1 | **487 1897-13** | Precision fuse | Fusible de précision | 1,2 | 3A |
| **23** | 1 | **762 1191-10** | Cable gland | Passe-fil | 3 | Ø280 |

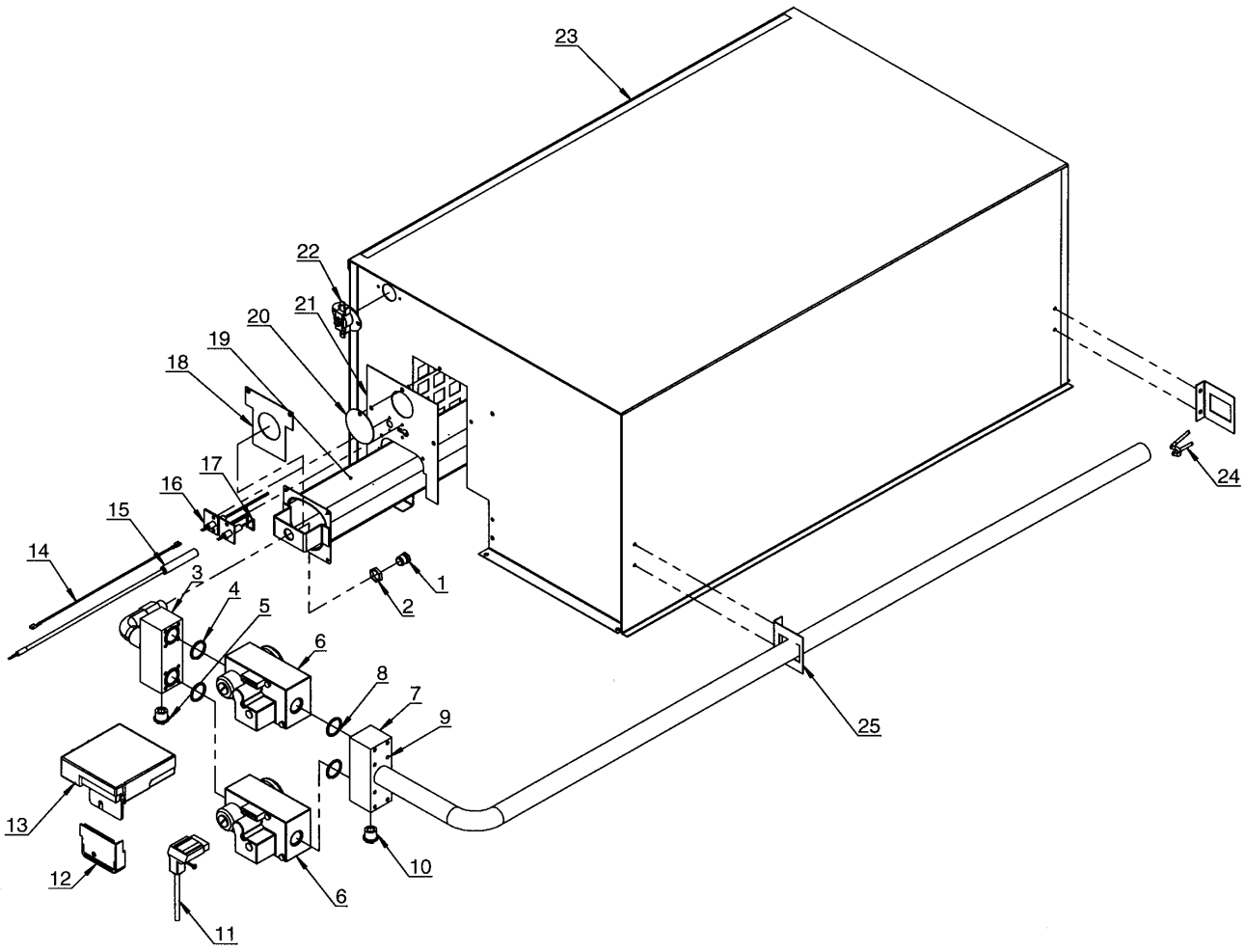


| Issue | Month | Year |
|---|---|---|
| 02 | 04 | 04 |

20 01 09

Tegn. 487 22 54 50

**TD75 20750/6062-**

**Heating unit, gas**

**Unité de chauffage, gaz**

| Illustration | Issue | Month | Year |
|---|---|---|---|
| Schéma | Issue | Month | Year |
| **200109/2** | **3** | **11** | **2004** |

| Item<br>Article | Qua<br>Qua | Art.No<br>Réf. article | Description | Description | Info<br>Info | Notes<br>Remarques |
|---|---|---|---|---|---|---|
| **1** | 1 | **471 9853-48** | Nozzle | Buse | 1,2 | Ø3,5 0-1999FT, LPG |
| | 1 | **471 9853-58** | Nozzle | Buse | 1,2 | Ø3,4 2000-3999FT, LPG |
| | 1 | **471 9853-82** | Nozzle | Buse | 1,2 | Ø3,2 4000-5999FT, LPG |
| | 1 | **471 9853-57** | Nozzle | Buse | 1,2 | Ø3,1 6000-8000FT, LPG |
| | 1 | **471 9853-95** | Nozzle | Buse | 1,2 | Ø5,8 0-1999FT, GNH |
| | 1 | **471 9853-81** | Nozzle | Buse | 1,2 | Ø5,6 2000-3999FT, GNH |
| | 1 | **471 9853-87** | Nozzle | Buse | 1,2 | Ø5,4 4000-5999FT, GNH |
| | 1 | **471 9853-90** | Nozzle | Buse | 1,2 | Ø5,2 6000-8000FT, GNH |
| | 1 | **471 9853-50** | Nozzle | Buse | 1,2 | Ø6,5 GNH |
| **2** | 1 | **471 8400-06** | Nut | Écrou | 3 | R3/8" 22NV H5 |
| * **3** | 1 | **487 1935-87** | Branch terminal | Collecteur | 3 | 1/2" With nipple |
| **4** | 2 | **487 1437-28** | •O-ring | •Joint torique | 3 | |
| **5** | 1 | **487 1437-29** | •Pipe plug | •Bouchon de tuyau | 3 | |
| * **6** | 2 | **487 1935-60** | Gas valve | Vanne de gaz | 1,2 | 110V |
| **7** | 2 | **487 1935-43** | Branch terminal | Collecteur | 3 | 3/4" With pipe |
| **8** | 2 | **487 1437-28** | •O-ring | •Joint torique | 3 | |
| **9** | 16 | **487 1437-30** | •Screw | •Vis | 3 | M4x45 |
| **10** | 1 | **487 1437-29** | •Pipe plug | •Bouchon de tuyau | 3 | |
| **11** | 1 | **487 2299-76** | Cable set | Ensemble de câbles | 3 | |
| **12** | 1 | **487 1438-21** | Cover | Capot | 3 | |
| **13** | 1 | **487 1438-25** | Control box | Boîtier de contrôle | 3 | 110V |
| **14** | 1 | **487 1934-50** | Cable | Câble | 3 | |
| **15** | 1 | **487 0068-27** | Ignition cable | Câble d'allumage | 3 | Gnist |
| **16** | 1 | **487 0068-28** | Sensor | Détecteur | 3 | |
| **17** | 1 | **487 0068-24** | Elektrode | Électrode | 3 | |
| **18** | 1 | **487 1533-97** | Air reducing plate | Tôle de réduction | 3 | Ø32 |
| **19** | 1 | **471 9869-18** | Gas burner | Radiateur à gaz | 3 | 54kW |
| **20** | 1 | **487 1701-22** | Cover | Couvercle | 3 | |
| **21** | 1 | **487 2368-38** | Bracket | Support | 3 | |
| **22** | 1 | **471 8815-04** | Thermostat | Thermostat | 1,2 | 150°C |
| **23** | 1 | **487 1935-39** | Combustion chamber | Chambre de combustion | 3 | |
| **24** | 1 | **487 2290-98** | Clamp | Archet | 3 | |
| **25** | 2 | **487 1701-46** | Bracket | Support | 3 | 3/4" |

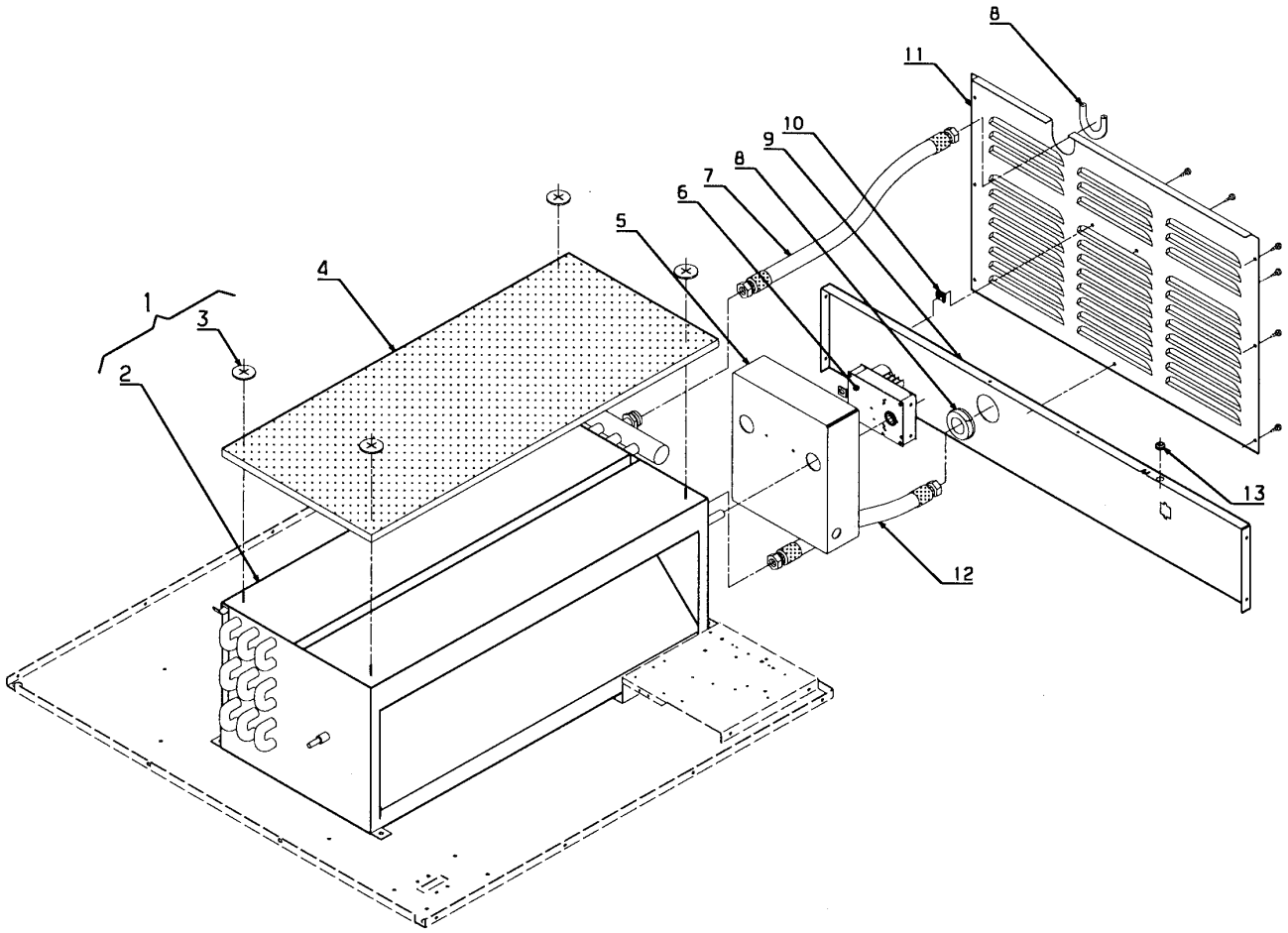


| Issue | Month | Year |
|---|---|---|
| 02 | 07 | 02 |

Tegn. 487 18 96 41

10 12 90

**TD75 -20750/6061**

**Heating unit, steam**

**Unité de chauffage, vapeur**

| Illustration | Issue | Month | Year |
|---|---|---|---|
| Schéma | Issue | Month | Year |
| **101290/2** | **3** | **7** | **2002** |

| Item<br>Article | Qua<br>Qua | Art.No<br>Réf. article | Description | Description | Info<br>Info | Notes<br>Remarques |
|---|---|---|---|---|---|---|
| **1** | 1 | **472 7864-11** | Steam battery | Accumulateur d'eau chaude | 3 | Complete |
| **2** | 1 | **487 1781-83** | •Steam battery | •Accumulateur d'eau chaude | 3 | |
| **3** | 5 | **471 8509-00** | •Insulating sheet | •Rondelle isolante | 3 | |
| **4** | 1 | **472 8243-02** | Insulation | Isolation | 3 | |
| **5** | 1 | **487 1781-82** | Screening | Blindage | 3 | |
| **6** | 1 | **487 1781-51** | Damper motor | Moteur amortisseur | 1,2 | |
| **7** | 1 | **487 1781-87** | Hose | Flexible | 3 | |
| **8** | 2 | **487 1781-59** | Gromet | Oeillet | 3 | |
| **9** | 1 | **487 1831-63** | Beam | Poutre | | See illustr. 101570 |
| **10** | 2 | **471 7864-05** | Captive nut | Écrou rapide | 3 | See illustr. 101570, 102052 |
| **11** | 1 | **487 0001-12** | Baffle plate | Plaque d'écran | | See illustr. 101570, 102052 |
| **12** | 1 | **487 1781-93** | Hose | Flexible | 3 | |
| **13** | 1 | **762 1168-00** | Cable gland | Passe-fil | 3 | |

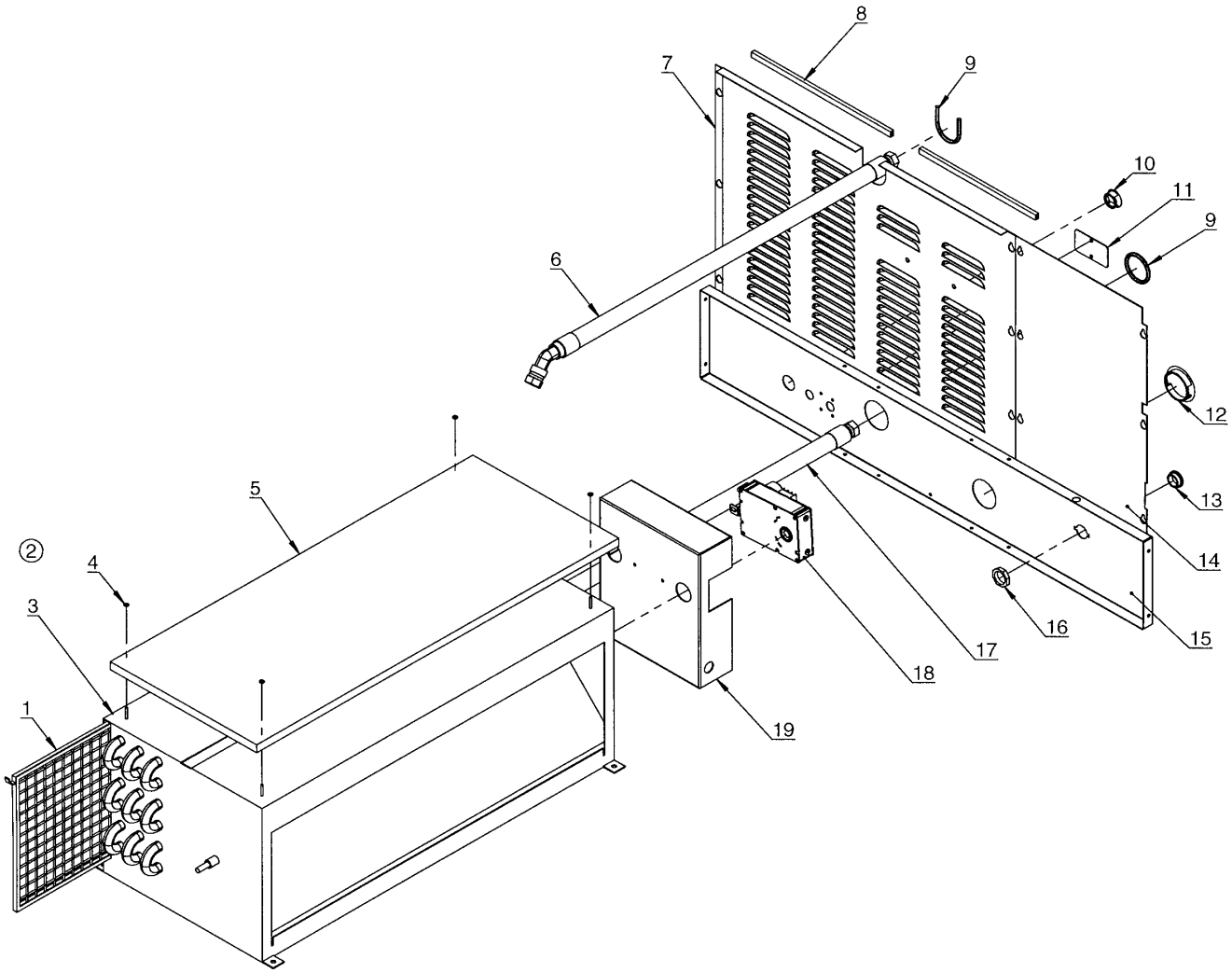


| Issue | Month | Year |
|---|---|---|
| 01 | 11 | 03 |

20 01 06

Tegn. 487 22 54 47

**TD75 20750/6062-**

**Heating unit, steam**

**Unité de chauffage, vapeur**

| Illustration | Issue | Month | Year |
|---|---|---|---|
| Schéma | Issue | Month | Year |
| **200106/1** | **1** | **11** | **2003** |

| Item<br>Article | Qua<br>Qua | Art.No<br>Réf. article | Description | Description | Info<br>Info | Notes<br>Remarques |
|---|---|---|---|---|---|---|
| **1** | 1 | **487 1973-44** | Filter | Filtre | 3 | |
| **2** | 1 | **472 7864-11** | Steam battery | Accumulateur d'eau chaude | 3 | Complete |
| **3** | 1 | **487 1781-83** | •Steam battery | •Accumulateur d'eau chaude | 3 | |
| **4** | 10 | **471 8509-00** | •Insulating sheet | •Rondelle isolante | 3 | |
| **5** | 1 | **472 8243-02** | Insulation | Isolation | 3 | |
| **6** | 1 | **487 1781-93** | Hose | Flexible | 3 | |
| **7** | 1 | **487 2368-21** | Baffle plate | Plaque d'écran | 3 | Steam |
| **8** | 2 | **487 1959-11** | Sealing strip | Bande d'étanchéité | 3 | |
| **9** | 2 | **487 1781-59** | Gromet | Oeillet | 3 | |
| **10** | 1 | **487 0275-13** | Blind plug | Écrou borgne | 3 | Ø25 |
| **11** | 1 | **487 2368-33** | Cover plate | Plaque recouvrement | 3 | |
| **12** | 1 | **487 0275-20** | Blind plug | Écrou borgne | 3 | Ø50 |
| **13** | 1 | **487 0275-30** | Blind plug | Écrou borgne | 3 | PG16 |
| **14** | 1 | **487 2368-28** | Cover | Couvercle | 3 | Without switch |
| **15** | 1 | **487 2368-04** | Beam | Poutre | 3 | |
| **16** | 1 | **487 0275-31** | Nut | Écrou | 3 | PG16 |
| **17** | 1 | **487 1781-87** | Hose | Flexible | 3 | |
| **18** | 1 | **487 1781-51** | Damper motor | Moteur amortisseur | 1,2 | |
| **19** | 1 | **487 1781-82** | Screening | Blindage | 3 | |

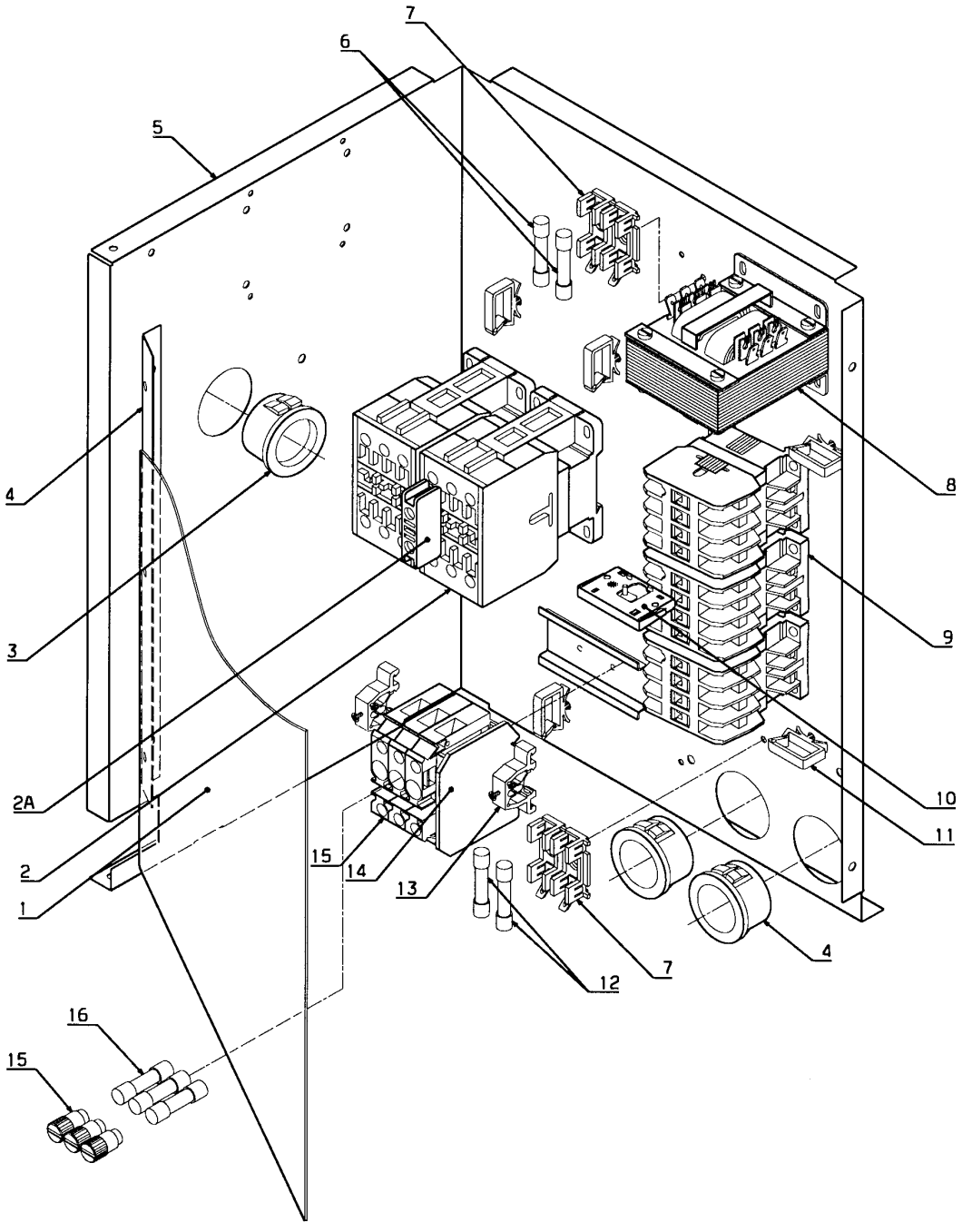


| Issue | Month | Year |
|---|---|---|
| 03 | 02 | 03 |

10 15 96

Tegn. 487 18 96 24

**TD75 -20750/6061**

**Control unit, electric**

**Unité de contrôle, électrique**

| Illustration | Issue | Month | Year |
|---|---|---|---|
| Schéma | Issue | Month | Year |
| **101596/3** | **5** | **4** | **2004** |

| Item<br>Article | Qua<br>Qua | Art.No<br>Réf. article | Description | Description | Info<br>Info | Notes<br>Remarques |
|---|---|---|---|---|---|---|
| **1** | 1 | **487 1831-30** | Cover | Couvercle | 3 | |
| **2** | 2 | **487 1535-68** | Relay | Relais | 1,2 | 240V 60Hz 208-230V 60Hz |
| | | | Heater | Surchauffeur | | -0211/004644 |
| | 2 | **438 9637-33** | Relay | Relais | 1,2 | 180-210V 50Hz/200-240V 60Hz |
| | | | | | | 0211/004645- |
| **2A** | 1 | **767 5101-92** | Socket | Bloc de connexion | 1,2 | Green 0211/004645- |
| **3** | 3 | **762 1212-10** | Cable gland | Passe-fil | 3 | Ø38,1 |
| **4** | 1 | **487 1831-29** | Rail | Rail | 3 | |
| **5** | 1 | **487 1820-09** | Component plate | Plaque composants | 3 | -0009/001733 |
| | 1 | **487 2217-01** | Component plate | Plaque composants | 3 | 0009/001734- |
| **6** | 2 | **487 1897-04** | Precision fuse | Fusible de précision | 1,2 | 1,25A |
| **7** | 2 | **487 1897-01** | Fuse holder | Porte-fusible | 3 | |
| **8** | 1 | **487 1897-08** | Transformer | Transformateur | 1,2 | |
| **9** | RQ | **767 5111-09** | Relay | Relais | 1,2 | 208-230V 60Hz |
| **10** | 1 | **487 1535-65** | Catch | Blocage | 1,2 | -20750/0005415 |
| | | | | | | 20750/0006241- |
| **11** | 8 | **487 1511-72** | Cable retainer | Gaine de câble | 3 | |
| **12** | 2 | **487 1897-02** | Precision fuse | Fusible de précision | 1,2 | 2,5A |
| **13** | 2 | **487 1384-04** | End stop | Butée | 3 | 0009/001734- |
| **14** | 1 | **487 0154-11** | End part | Plaque désenclenchement | 3 | 0009/001734- |
| **15** | 3 | **487 0154-10** | Fuse holder | Porte-fusible | 3 | 0009/001734- |
| **16** | 3 | **762 8221-91** | Fuse | Fusible | 1,2 | 10A 0009/1734-0211/4644 |
| | 3 | **487 0289-29** | Fuse | Fusible | 1,2 | T10A 0211/004645- |

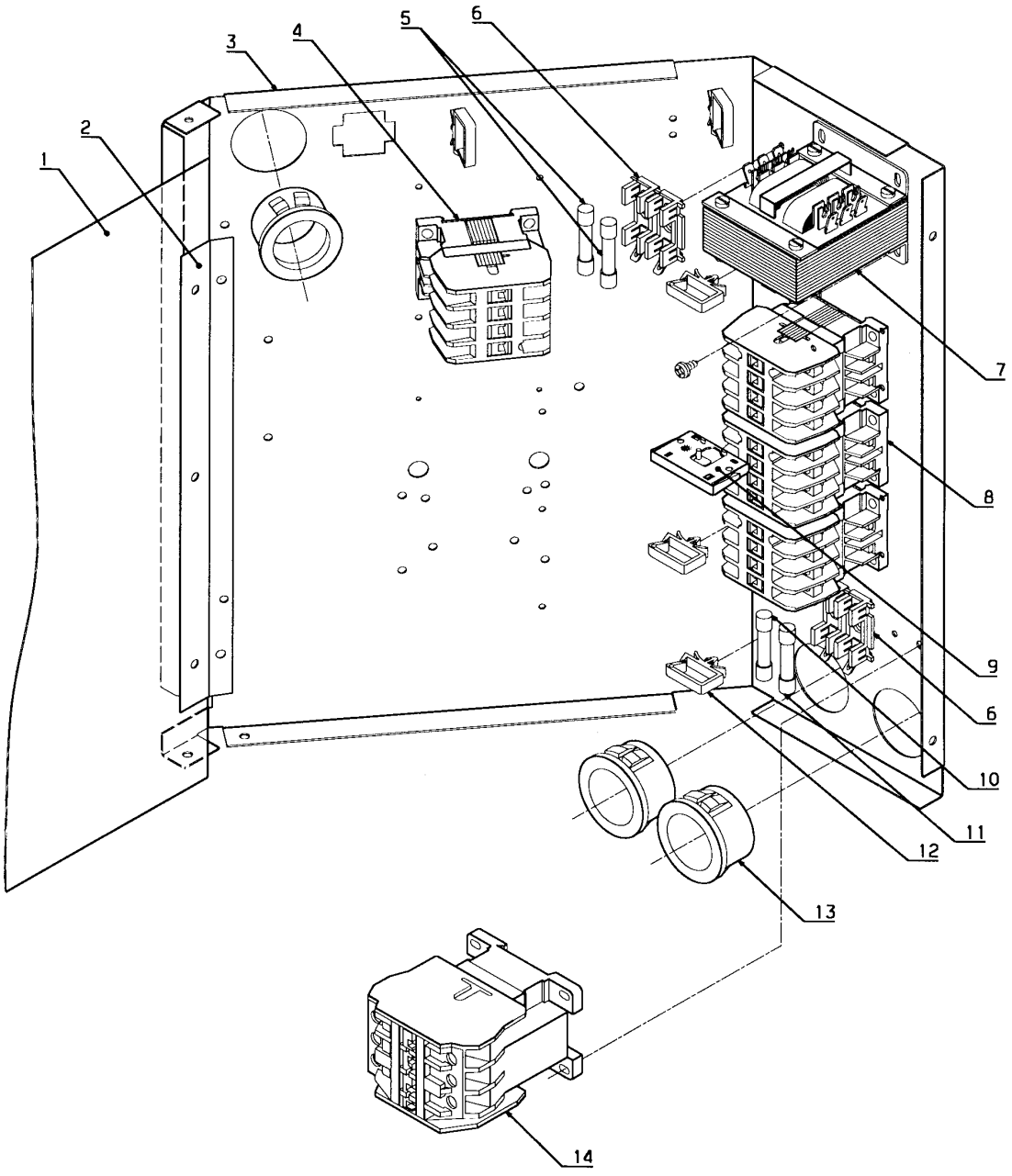


| Issue | Month | Year |
|---|---|---|
| 04 | 11 | 01 |

Tegn. 487 18 96 07

10 15 50

**TD75 -0012/2092**

**Control unit, gas**

**Unite de contrôle, gaz**

| Illustration | Issue | Month | Year |
|---|---|---|---|
| Schéma | Issue | Month | Year |
| **101550/3** | **6** | **4** | **2004** |

| Item<br>Article | Qua<br>Qua | Art.No<br>Réf. article | Description | Description | Info<br>Info | Notes<br>Remarques |
|---|---|---|---|---|---|---|
| **1** | 1 | **487 1831-30** | Cover | Couvercle | 3 | |
| **2** | 1 | **487 1831-29** | Rail | Rail | 3 | |
| **3** | 1 | **487 1820-07** | Component plate | Plaque composants | 3 | |
| **4** | 1 | **767 5113-09** | Relay | Relais | 1,2 | 120V/208-240V 1AC 60Hz |
| | 1 | **767 5111-09** | Relay | Relais | 1,2 | 208-240V 3AC 60Hz |
| **5** | 2 | **487 1897-04** | Precision fuse | Fusible de précision | 1,2 | 1,25A |
| **6** | 2 | **487 1897-01** | Fuse holder | Porte-fusible | 3 | |
| **7** | 1 | **487 1897-08** | Transformer | Transformateur | 1,2 | |
| **8** | RQ | **767 5111-09** | Relay | Relais | 1,2 | 208-240V 3AC 60Hz |
| **9** | 1 | **487 1535-65** | Catch | Blocage | 1,2 | Reversing -20750/0005415<br>20750/0006241- |
| **10** | 1 | **487 1897-03** | Precision fuse | Fusible de précision | 1,2 | 6,0A |
| **11** | 1 | **487 1897-02** | Precision fuse | Fusible de précision | 1,2 | 2,5A |
| **12** | 6 | **487 1511-72** | Cable retainer | Gaine de câble | 3 | |
| **13** | 3 | **762 1212-10** | Cable gland | Passe-fil | 3 | Ø38,1 |
| **14** | 1 | **487 1535-48** | Relay | Relais | 1,2 | 120V/208-240V 1AC 60Hz |

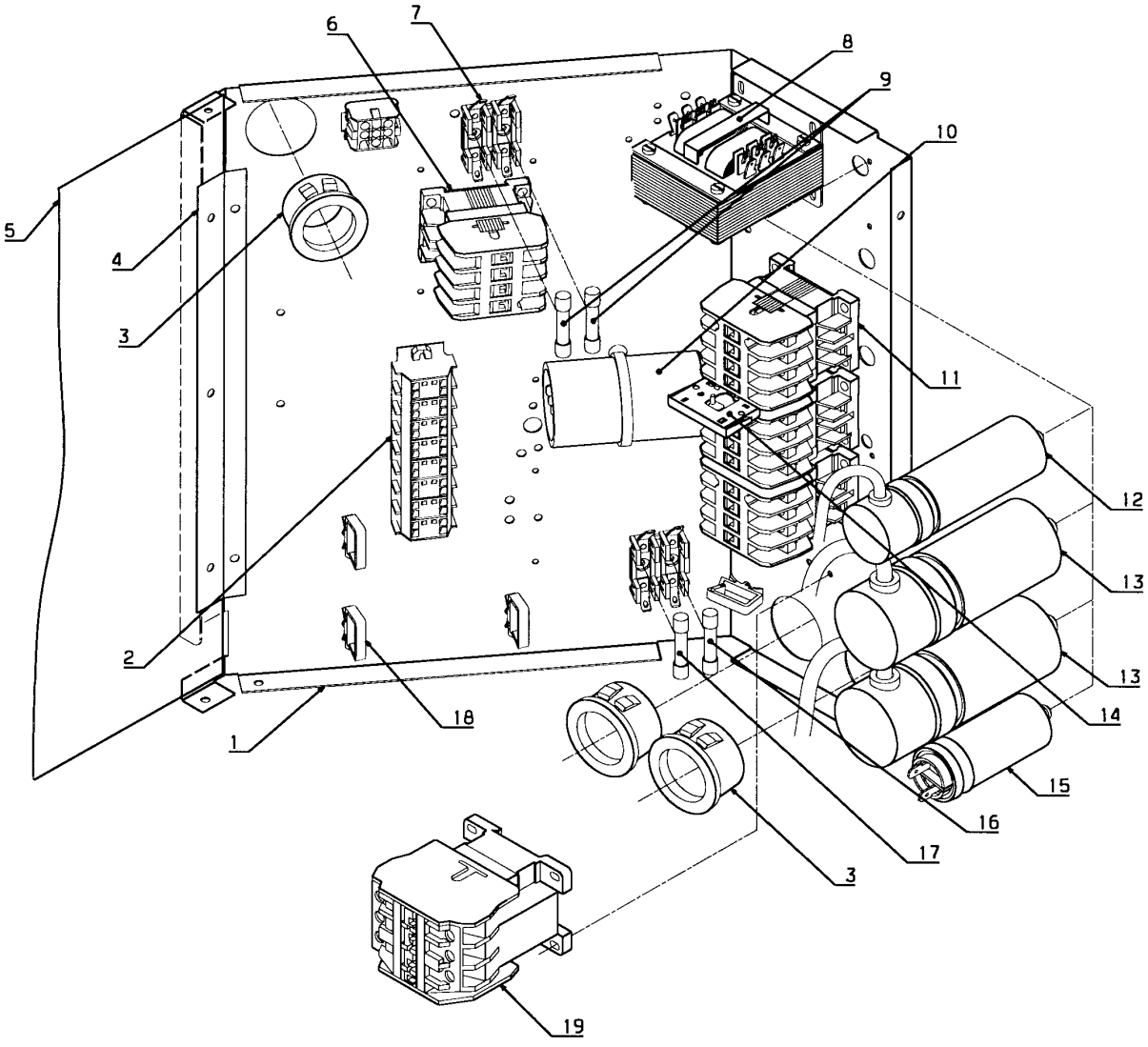


| Issue | Month | Year |
|---|---|---|
| 01 | 11 | 01 |

10 20 75

Tegn. 487 22 53 62

**TD75 0012/2093-20750/6061**

**Control unit, gas**

**Unite de contrôle, gaz**

| Illustration | Issue | Month | Year |
|---|---|---|---|
| Schéma | Issue | Month | Year |
| **102075/1** | **5** | **4** | **2004** |

| Item<br>Article | Qua<br>Qua | Art.No<br>Réf. article | Description | Description | Info<br>Info | Notes<br>Remarques |
|---|---|---|---|---|---|---|
| **1** | 1 | **487 1820-07** | Component plate | Plaque composants | 3 | |
| **2** | 1 | **487 1899-98** | Terminal block | Borne de raccordement | 3 | 8-pol |
| **3** | 3 | **762 1212-10** | Cable gland | Passe-fil | 3 | Ø38,1 |
| **4** | 1 | **487 1831-29** | Rail | Rail | 3 | |
| **5** | 1 | **487 1831-30** | Cover | Couvercle | 3 | |
| **6** | 1 | **767 5113-09** | Relay | Relais | 1,2 | 120V/208-240V 1AC 60Hz |
| | 1 | **767 5111-09** | Relay | Relais | 1,2 | 208-240V 3AC 60Hz |
| **7** | 2 | **487 1897-01** | Fuse holder | Porte-fusible | 3 | |
| **8** | 1 | **487 1897-08** | Transformer | Transformateur | 1,2 | |
| **9** | 2 | **487 1897-04** | Precision fuse | Fusible de précision | 1,2 | 1,25A |
| **10** | 1 | **471 9566-01** | Relay | Relais | 1,2 | 120V 1AC 60Hz |
| **11** | RQ | **767 5111-09** | Relay | Relais | 1,2 | 208-240V 3AC 60Hz |
| **12** | 1 | **487 1899-89** | Capacitor | Condensateur | 1,2 | 50µF |
| **13** | 2 | **487 1899-88** | Capacitor | Condensateur | 1,2 | 80µF |
| | 1 | **487 1899-95** | Capacitor | Condensateur | 1,2 | 16µF 208-240V 1AC 60Hz 0502/003879- |
| | 1 | **471 9525-26** | Capacitor | Condensateur | 1,2 | 25µF 208-240V 1AC 60Hz 0502/003879- |
| **14** | 1 | **487 1535-65** | Catch | Blocage | 1,2 | Reversing -20750/005415 20750/0006241- |
| **15** | 1 | **487 1703-99** | Capacitor | Condensateur | 1,2 | 40µF |
| | 1 | **487 1535-76** | Capacitor | Condensateur | 1,2 | 10µF 0502/003879- |
| **16** | 1 | **487 1897-02** | Precision fuse | Fusible de précision | 1,2 | 2,5A |
| **17** | 1 | **487 1897-03** | Precision fuse | Fusible de précision | 1,2 | 6,0A |
| **18** | 10 | **487 1511-72** | Cable retainer | Gaine de câble | 3 | |
| **19** | 1 | **487 1535-48** | Relay | Relais | 1,2 | 120V/208-240V 1AC 60Hz |

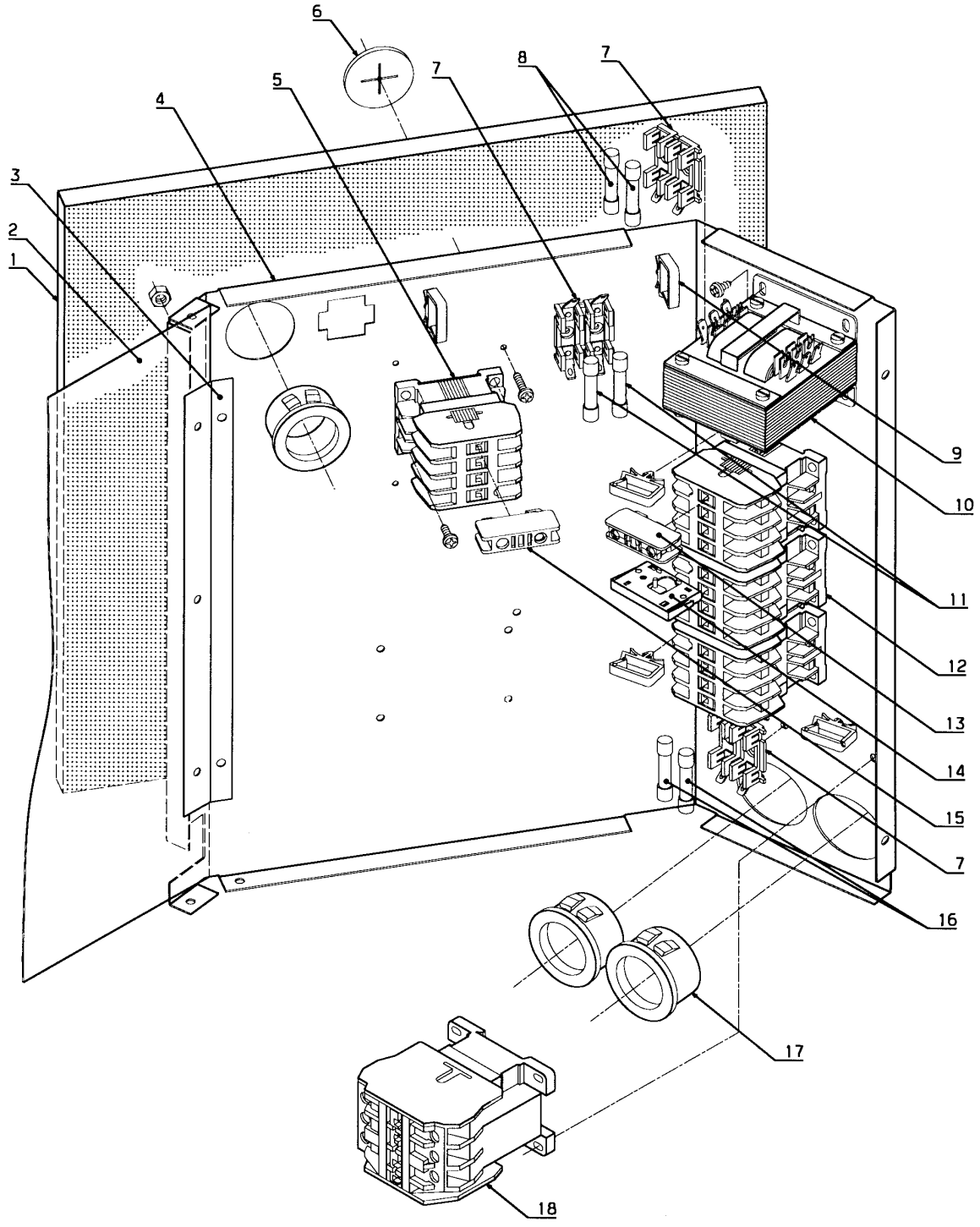


| Issue | Month | Year |
|---|---|---|
| 03 | 11 | 01 |

Tegn. 487 18 96 25

10 15 97

**TD75 -0012/2092**

**Control unit, steam**

**Unite de contrôle, vapeur**

| Illustration | Issue | Month | Year |
|---|---|---|---|
| Schéma | Issue | Month | Year |
| **101597/3** | **4** | **4** | **2004** |

| Item<br>Article | Qua<br>Qua | Art.No<br>Réf. article | Description | Description | Info<br>Info | Notes<br>Remarques |
|---|---|---|---|---|---|---|
| **1** | 1 | **487 1781-57** | Insulating plate | Plaque isolante | 3 | |
| **2** | 1 | **487 1831-30** | Cover | Couvercle | 3 | |
| **3** | 1 | **487 1831-29** | Rail | Rail | 3 | |
| **4** | 1 | **487 1820-07** | Component plate | Plaque composants | 3 | |
| **5** | 1 | **767 5113-09** | Relay | Relais | 1,2 | 120V/208-240V 1AC 60Hz |
| | 1 | **767 5111-09** | Relay | Relais | 1,2 | 208-240V 3AC 60Hz |
| **6** | 5 | **471 8509-00** | Insulating sheet | Rondelle isolante | 3 | |
| **7** | 3 | **487 1897-01** | Fuse holder | Porte-fusible | 3 | |
| **8** | 2 | **487 1897-04** | Precision fuse | Fusible de précision | 1,2 | 1,25A |
| **9** | 6 | **487 1511-72** | Cable retainer | Gaine de câble | 3 | |
| **10** | 1 | **487 1897-08** | Transformer | Transformateur | 1,2 | |
| **11** | 2 | **487 1897-95** | Precision fuse | Fusible de précision | 1,2 | 0,5A |
| **12** | RQ | **767 5111-09** | Relay | Relais | 1,2 | 208-240V 3AC 60Hz |
| **13** | 1 | **767 5101-92** | Socket | Bloc de connexion | 1,2 | Green |
| **14** | 1 | **487 1535-65** | Catch | Blocage | 1,2 | Reversing -20750/005415<br>20750/0006241- |
| **15** | 1 | **767 5102-92** | Socket | Bloc de connexion | 1,2 | Red |
| **16** | 2 | **487 1897-02** | Precision fuse | Fusible de précision | 1,2 | 2,5A |
| **17** | 3 | **762 1212-10** | Cable gland | Passe-fil | 3 | Ø38,1 |
| **18** | 1 | **487 1535-48** | Relay | Relais | 1,2 | 120V/208-240V 1AC 60Hz |

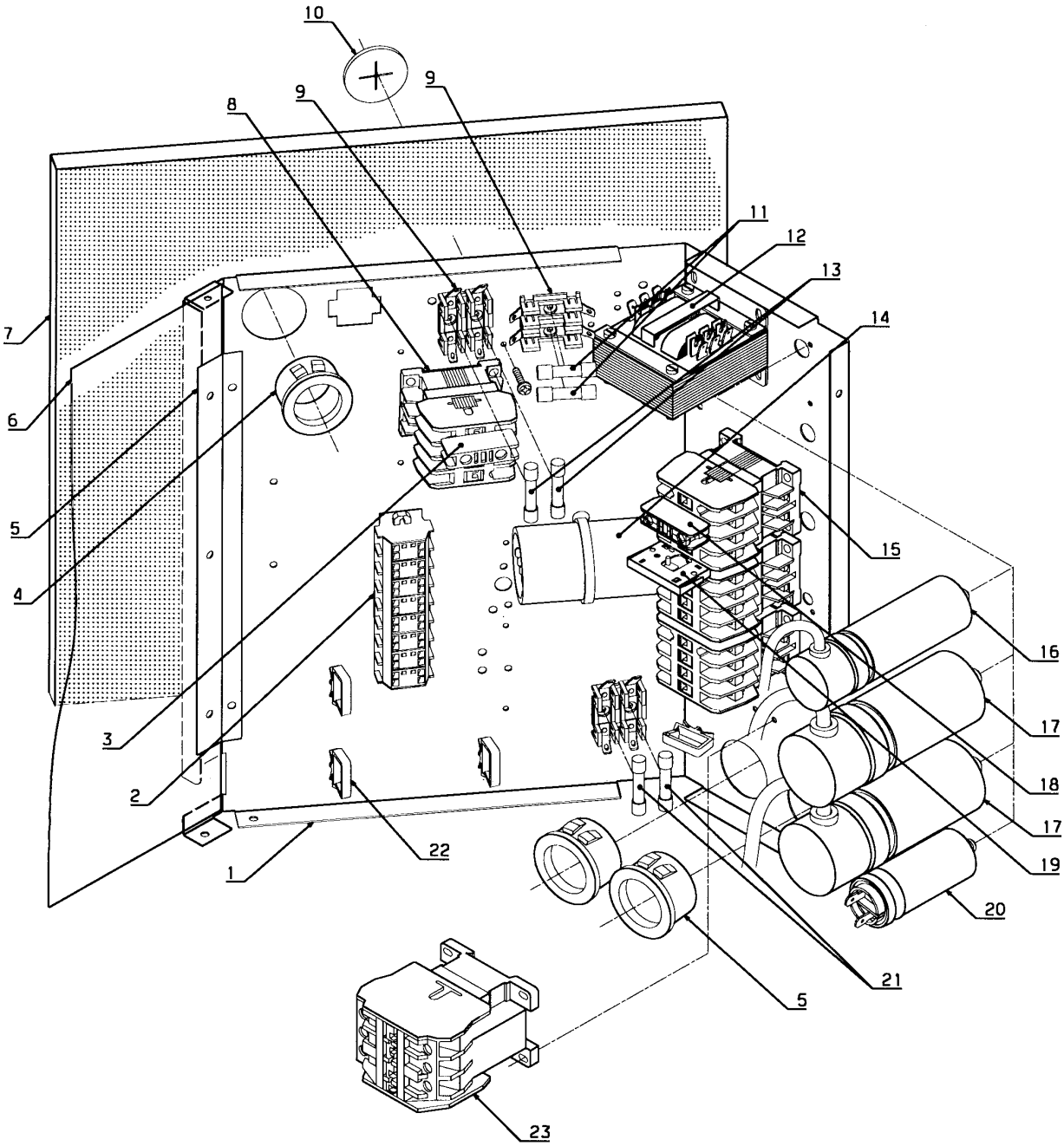


| Issue | Month | Year |
|---|---|---|
| 01 | 11 | 01 |

Tegn. 487 22 53 61

10 20 74

**TD75 0012/2093-20750/6061**

**Control unit, steam**

**Unite de contrôle, vapeur**

| Illustration | Issue | Month | Year |
|---|---|---|---|
| Schéma | Issue | Month | Year |
| **102074/1** | **5** | **4** | **2004** |

| Item<br>Article | Qua<br>Qua | Art.No<br>Réf. article | Description | Description | Info<br>Info | Notes<br>Remarques |
|---|---|---|---|---|---|---|
| **1** | 1 | **487 1820-07** | Component plate | Plaque composants | 3 | |
| **2** | 1 | **487 1899-98** | Terminal block | Borne de raccordement | 3 | 8-pol |
| **3** | 1 | **767 5102-92** | Socket | Bloc de connexion | 1,2 | Red |
| **4** | 3 | **762 1212-10** | Cable gland | Passe-fil | 3 | Ø38,1 |
| **5** | 1 | **487 1831-29** | Rail | Rail | 3 | |
| **6** | 1 | **487 1831-30** | Cover | Couvercle | 3 | |
| **7** | 1 | **487 1781-57** | Insulating plate | Plaque isolante | 3 | |
| **8** | 1 | **767 5113-09** | Relay | Relais | 1,2 | 120V/208-240V 1AC 60Hz |
| | 1 | **767 5111-09** | Relay | Relais | 1,2 | 208-240V 3AC 60Hz |
| **9** | 3 | **487 1897-01** | Fuse holder | Porte-fusible | 3 | |
| **10** | 5 | **471 8509-00** | Insulating sheet | Rondelle isolante | 3 | |
| **11** | 2 | **487 1897-04** | Precision fuse | Fusible de précision | 1,2 | 1,25A |
| **12** | 1 | **487 1897-08** | Transformer | Transformateur | 1,2 | |
| **13** | 2 | **487 1897-95** | Precision fuse | Fusible de précision | 1,2 | 0,5A |
| **14** | 1 | **471 9566-01** | Relay | Relais | 1,2 | |
| **15** | RQ | **767 5111-09** | Relay | Relais | 1,2 | 208-240V 3AC 60Hz |
| **16** | 1 | **487 1899-89** | Capacitor | Condensateur | 1,2 | 50µF |
| **17** | 2 | **487 1899-88** | Capacitor | Condensateur | 1,2 | 80µF |
| | 1 | **487 1899-95** | Capacitor | Condensateur | 1,2 | 16µF 208-240V 1AC 60Hz<br>0502/003879- |
| | 1 | **471 9525-26** | Capacitor | Condensateur | 1,2 | 25µF 208-240V 1AC 60Hz<br>0502/003879- |
| **18** | 1 | **767 5101-92** | Socket | Bloc de connexion | 1,2 | Green |
| **19** | 1 | **487 1535-65** | Catch | Blocage | 1,2 | Reversing -20750/0005415<br>20750/0006241- |
| **20** | 1 | **487 1703-99** | Capacitor | Condensateur | 1,2 | 40µF |
| | 1 | **487 1535-76** | Capacitor | Condensateur | 1,2 | 10µF 208-240V 1AC 60Hz<br>0502/003879- |
| **21** | 2 | **487 1897-02** | Precision fuse | Fusible de précision | 1,2 | 2,5A |
| **22** | 9 | **487 1511-72** | Cable retainer | Gaine de câble | 3 | |
| **23** | 1 | **487 1535-48** | Relay | Relais | 1,2 | 120V/208-240V 1AC 60Hz |

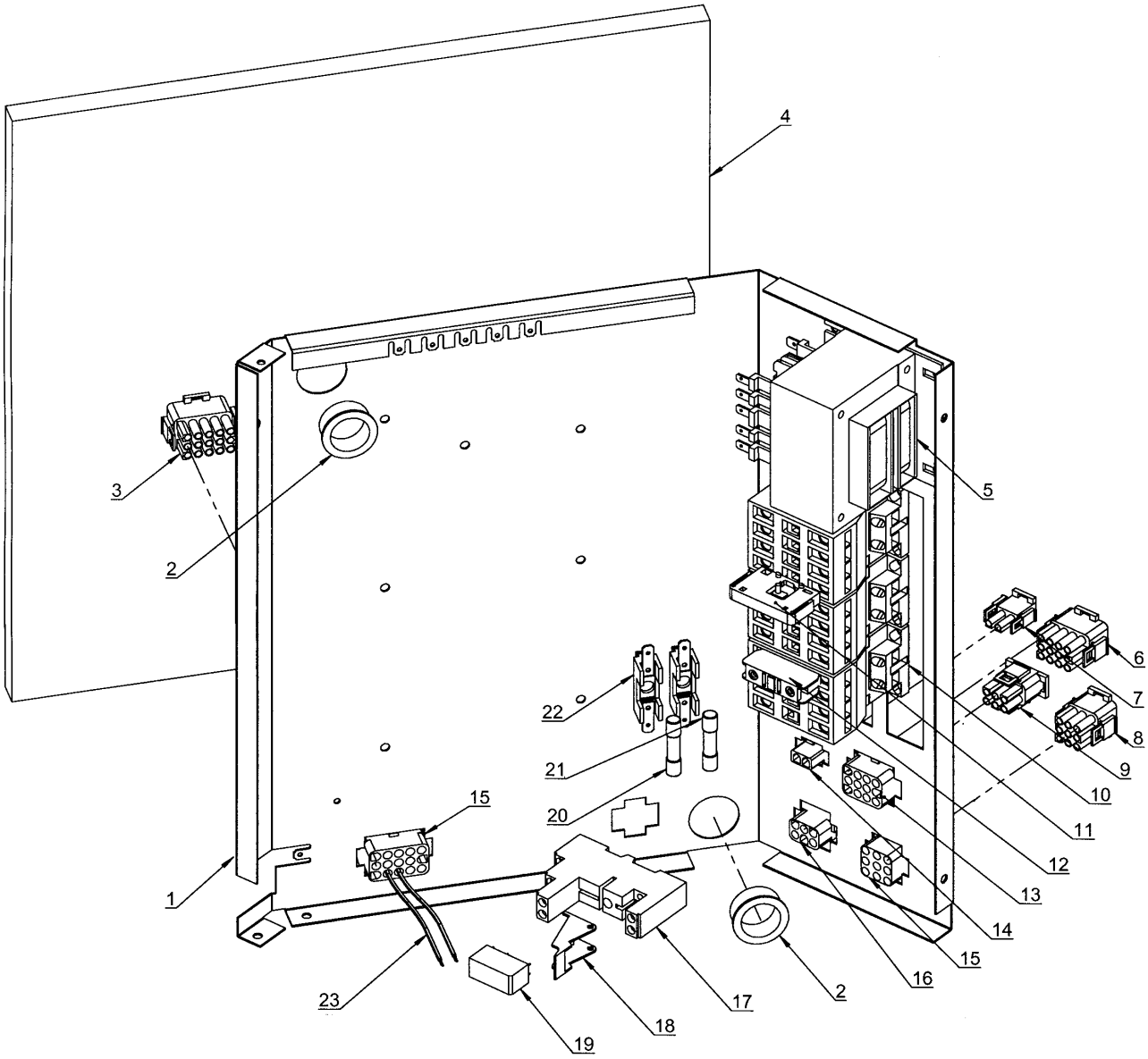


| Issue | Month | Year |
|---|---|---|
| 02 | 06 | 04 |

Tegn. 487 22 54 11

**TD75 20750/6062-**

**Control unit, Basic3**

**Unité de contrôle, Basic3**

| Illustration | Issue | Month | Year |
|---|---|---|---|
| Schéma | Issue | Month | Year |
| **200070/2** | **3** | **6** | **2004** |

| Item<br>Article | Qua<br>Qua | Art.No<br>Réf. article | Description | Description | Info<br>Info | Notes<br>Remarques |
|---|---|---|---|---|---|---|
| **1** | 1 | **487 2368-02** | Component plate | Plaque composants | 3 | |
| **2** | 2 | **762 1191-10** | Cable gland | Passe-fil | 3 | Ø280 |
| **3** | 1 | **487 2299-70** | Cable set | Ensemble de câbles | 3 | |
| | 1 | **487 2299-72** | Cable set | Ensemble de câbles | 3 | EI 36kW, 400-480V |
| | 1 | **487 2299-74** | Cable set | Ensemble de câbles | 3 | Steam |
| | 1 | **487 2299-76** | Cable set | Ensemble de câbles | 3 | Gas |
| **4** | 1 | **487 1781-57** | Insulating plate | Plaque isolante | 3 | Steam |
| **5** | 1 | **487 0289-48** | Transformer | Transformateur | 1,2 | 120V 120V 1AC |
| | 1 | **487 0289-47** | Transformer | Transformateur | 1,2 | 200-240V |
| | 1 | **487 0289-46** | Transformer | Transformateur | 1,2 | 400-480V 3AC |
| **6** | 1 | **487 2299-54** | Cable set | Ensemble de câbles | 3 | Motor 120V/ 208-240V 1AC |
| | 1 | **487 2299-55** | Cable set | Ensemble de câbles | 3 | 120V 1AC 60Hz Motor |
| | 1 | **487 2299-51** | Cable set | Ensemble de câbles | 3 | Motor 208-240V 3AC |
| | 1 | **487 2299-52** | Cable set | Ensemble de câbles | 3 | Motor 400-480V 3AC |
| **7** | 1 | **487 2299-44** | Cable set | Ensemble de câbles | 3 | Moisture sensor |
| **8** | 1 | **487 2299-39** | Cable set | Ensemble de câbles | 3 | OHS NTC Vaccum |
| **9** | 1 | **487 2299-20** | Cable set | Ensemble de câbles | 3 | Gas + steam |
| | 1 | **487 2299-21** | Cable set | Ensemble de câbles | 3 | 120V 1AC |
| **10** | 1 | **438 9637-31** | Relay | Relais | 1,2 | 120V 1AC Gas + steam |
| | 1 | **438 9636-81** | Relay | Relais | 1,2 | 208-240V 1AC Gas + steam |
| | RQ | **438 9636-11** | Relay | Relais | 1,2 | 3AC |
| **11** | 1 | **487 1535-65** | Catch | Blocage | 1,2 | |
| **12** | 1 | **767 5101-92** | Socket | Bloc de connexion | 1,2 | Green |
| **13** | 1 | **487 2299-08** | Cable set | Ensemble de câbles | 3 | Without reversing |
| | 1 | **487 2299-09** | Cable set | Ensemble de câbles | 3 | With reversing |
| **14** | 1 | **487 2299-12** | Cable set | Ensemble de câbles | 3 | Moisture sensor |
| **15** | 1 | **487 2299-02** | Cable set | Ensemble de câbles | 3 | EI Without reversing |
| | 1 | **487 2299-03** | Cable set | Ensemble de câbles | 3 | EI With reversing |
| | 1 | **487 2299-04** | Cable set | Ensemble de câbles | 3 | Steam Without reversing |
| | 1 | **487 2299-05** | Cable set | Ensemble de câbles | 3 | Steam With reversing |
| | 1 | **487 2299-17** | Cable set | Ensemble de câbles | 3 | Gas With reversing |
| | 1 | **487 2299-18** | Cable set | Ensemble de câbles | 3 | Gas Without reversing |
| **16** | 1 | **487 2299-22** | Cable set | Ensemble de câbles | 3 | 120V 1AC Gas + steam |
| | 1 | **487 2299-01** | Cable set | Ensemble de câbles | 3 | Gas + steam |
| **17** | 1 | **487 0289-81** | Relay socket | Douille | 3 | |
| **18** | 1 | **487 0289-85** | Clamp | Archet | 3 | |
| **19** | 1 | **487 0274-22** | Relay | Relais | 1,2 | |
| **20** | 1 | **487 1897-95** | Precision fuse | Fusible de précision | 1,2 | 0,5A |
| **21** | 1 | **487 0274-20** | Precision fuse | Fusible de précision | 1,2 | 1A |
| **22** | 2 | **487 0274-14** | Fuse holder | Porte-fusible | 3 | |
| **23** | 1 | **487 2299-13** | Cable | Câble | 3 | Gas |

# Numerical index/Numerical index


| Art.No/Réf. article | Page/Page |
|---|---|
| 438 9636-11 | 73 |
| 438 9636-81 | 73 |
| 438 9637-31 | 53 |
| 438 9637-31 | 73 |
| 438 9637-33 | 63 |
| 471 1764-74 | 33 |
| 471 1764-74 | 37 |
| 471 1764-75 | 33 |
| 471 1764-75 | 37 |
| 471 1764-78 | 33 |
| 471 1764-78 | 37 |
| 471 1764-79 | 33 |
| 471 1764-79 | 37 |
| 471 1765-13 | 29 |
| 471 1765-14 | 29 |
| 471 1765-15 | 31 |
| 471 1765-16 | 31 |
| 471 1765-29 | 29 |
| 471 1765-30 | 29 |
| 471 1765-31 | 31 |
| 471 1765-32 | 31 |
| 471 2068-48 | 15 |
| 471 2068-48 | 17 |
| 471 2068-48 | 29 |
| 471 7854-02 | 49 |
| 471 7864-05 | 59 |
| 471 7903-03 | 29 |
| 471 8400-06 | 55 |
| 471 8400-06 | 57 |
| 471 8502-18 | 29 |
| 471 8509-00 | 59 |
| 471 8509-00 | 61 |
| 471 8509-00 | 69 |
| 471 8509-00 | 71 |
| 471 8731-01 | 43 |
| 471 8752-04 | 7 |
| 471 8752-04 | 9 |
| 471 8815-04 | 55 |
| 471 8815-04 | 57 |
| 471 8910-91 | 25 |
| 471 8922-07 | 25 |
| 471 9010-80 | 43 |
| 471 9010-80 | 45 |
| 471 9018-51 | 33 |
| 471 9018-51 | 37 |
| 471 9018-51 | 41 |
| 471 9525-26 | 41 |
| 471 9525-26 | 67 |
| 471 9525-26 | 71 |
| 471 9566-01 | 33 |
| 471 9566-01 | 41 |
| 471 9566-01 | 67 |
| 471 9566-01 | 71 |
| 471 9566-05 | 33 |
| 471 9566-05 | 41 |
| 471 9853-48 | 55 |
| 471 9853-48 | 57 |
| 471 9853-50 | 55 |
| 471 9853-50 | 57 |
| 471 9853-57 | 55 |
| 471 9853-57 | 57 |
| 471 9853-58 | 55 |
| 471 9853-58 | 57 |
| 471 9853-81 | 55 |
| 471 9853-81 | 57 |
| 471 9853-82 | 55 |
| 471 9853-82 | 57 |
| 471 9853-87 | 55 |
| 471 9853-87 | 57 |
| 471 9853-90 | 55 |
| 471 9853-90 | 57 |
| 471 9853-95 | 55 |
| 471 9853-95 | 57 |
| 471 9869-18 | 55 |
| 471 9869-18 | 57 |
| 472 5537-08 | 7 |
| 472 5537-08 | 9 |
| 472 7307-01 | 29 |
| 472 7308-01 | 29 |
| 472 7310-01 | 15 |
| 472 7378-08 | 15 |
| 472 7408-04 | 15 |
| 472 7414-01 | 11 |
| 472 7414-01 | 13 |
| 472 7777-01 | 11 |
| 472 7777-01 | 13 |
| 472 7864-11 | 59 |
| 472 7864-11 | 61 |
| 472 8243-02 | 59 |
| 472 8243-02 | 61 |
| 487 0001-06 | 9 |
| 487 0001-07 | 9 |
| 487 0001-12 | 9 |
| 487 0001-12 | 59 |
| 487 0068-24 | 55 |
| 487 0068-24 | 57 |
| 487 0068-27 | 57 |
| 487 0068-28 | 55 |
| 487 0068-28 | 57 |
| 487 0101-97 | 31 |
| 487 0101-98 | 31 |
| 487 0106-07 | 25 |
| 487 0127-71 | 7 |
| 487 0127-71 | 9 |
| 487 0151-12 | 31 |
| 487 0151-14 | 37 |
| 487 0151-14 | 41 |
| 487 0151-15 | 29 |
| 487 0151-15 | 31 |
| 487 0151-86 | 33 |
| 487 0151-86 | 37 |
| 487 0151-86 | 41 |
| 487 0154-10 | 53 |
| 487 0154-10 | 63 |
| 487 0154-11 | 53 |
| 487 0154-11 | 63 |
| 487 0191-11 | 21 |
| 487 0191-11 | 25 |
| 487 0191-23 | 21 |
| 487 0191-23 | 23 |
| 487 0191-23 | 25 |
| 487 0191-23 | 27 |
| 487 0215-56* | 15 |
| 487 0215-58* | 15 |
| 487 0215-63* | 15 |
| 487 0215-65* | 15 |
| 487 0215-71* | 15 |
| 487 0215-72* | 17 |
| 487 0215-73* | 17 |
| 487 0274-14 | 73 |
| 487 0274-15 | 23 |
| 487 0274-15 | 27 |
| 487 0274-17 | 23 |
| 487 0274-17 | 27 |
| 487 0274-18 | 13 |
| 487 0274-20 | 73 |
| 487 0274-22 | 73 |
| 487 0275-13 | 61 |
| 487 0275-20 | 61 |
| 487 0275-30 | 61 |
| 487 0275-31 | 61 |
| 487 0281-98 | 27 |
| 487 0289-04 | 13 |
| 487 0289-05 | 13 |
| 487 0289-12 | 13 |
| 487 0289-13 | 13 |
| 487 0289-22 | 47 |
| 487 0289-23 | 47 |
| 487 0289-29 | 53 |
| 487 0289-29 | 63 |
| 487 0289-36 | 53 |
| 487 0289-46 | 73 |
| 487 0289-47 | 73 |
| 487 0289-48 | 73 |
| 487 0289-51 | 41 |
| 487 0289-81 | 73 |
| 487 0289-85 | 73 |
| 487 1057-03 | 25 |
| 487 1057-03 | 27 |
| 487 1376-07 | 29 |
| 487 1384-02 | 43 |
| 487 1384-04 | 43 |
| 487 1384-04 | 45 |
| 487 1384-04 | 53 |
| 487 1384-04 | 63 |
| 487 1385-09 | 43 |
| 487 1437-18 | 55 |
| 487 1437-28 | 57 |
| 487 1437-29 | 57 |
| 487 1437-30 | 57 |
| 487 1438-21 | 57 |
| 487 1438-25 | 57 |
| 487 1457-01 | 27 |
| 487 1457-02 | 27 |
| 487 1457-30 | 27 |
| 487 1457-84 | 27 |
| 487 1457-94* | 27 |
| 487 1504-05 | 9 |
| 487 1504-41 | 9 |
| 487 1504-55 | 9 |
| 487 1504-63 | 9 |
| 487 1504-99 | 21 |
| 487 1504-99 | 25 |
| 487 1510-88 | 19 |
| 487 1511-72 | 63 |
| 487 1511-72 | 65 |
| 487 1511-72 | 67 |
| 487 1511-72 | 69 |
| 487 1511-72 | 71 |
| 487 1512-30* | 13 |
| 487 1533-97 | 55 |
| 487 1533-97 | 57 |
| 487 1535-21 | 21 |
| 487 1535-21 | 23 |
| 487 1535-21 | 25 |
| 487 1535-21 | 27 |
| 487 1535-42 | 43 |
| 487 1535-42 | 45 |
| 487 1535-48 | 65 |
| 487 1535-48 | 67 |
| 487 1535-48 | 69 |
| 487 1535-48 | 71 |
| 487 1535-65 | 63 |
| 487 1535-65 | 65 |
| 487 1535-65 | 67 |
| 487 1535-65 | 69 |
| 487 1535-65 | 71 |
| 487 1535-65 | 73 |
| 487 1535-68 | 63 |
| 487 1535-76 | 35 |
| 487 1535-76 | 41 |
| 487 1535-76 | 67 |
| 487 1535-76 | 71 |
| 487 1626-04 | 7 |
| 487 1626-04 | 9 |
| 487 1626-04 | 13 |
| 487 1694-18 | 41 |
| 487 1694-34 | 35 |
| 487 1694-34 | 37 |
| 487 1694-34 | 41 |
| 487 1694-35 | 33 |
| 487 1694-35 | 37 |
| 487 1694-35 | 41 |
| 487 1694-48 | 33 |
| 487 1694-48 | 37 |
| 487 1694-48 | 41 |
| 487 1694-64 | 7 |
| 487 1694-64 | 9 |
| 487 1694-64 | 13 |
| 487 1694-68 | 7 |
| 487 1694-68 | 9 |
| 487 1694-68* | 13 |
| 487 1694-69 | 29 |
| 487 1694-69 | 31 |
| 487 1694-92 | 29 |
| 487 1695-03 | 37 |
| 487 1695-15 | 7 |
| 487 1695-15 | 9 |
| 487 1695-15 | 13 |
| 487 1695-30 | 31 |
| 487 1695-53 | 33 |
| 487 1695-53 | 37 |
| 487 1695-53 | 41 |
| 487 1695-54 | 33 |
| 487 1695-54 | 37 |
| 487 1695-54 | 41 |
| 487 1695-62 | 7 |
| 487 1695-64 | 29 |
| 487 1695-67 | 7 |
| 487 1695-79 | 13 |
| 487 1695-87 | 33 |
| 487 1695-87 | 37 |
| 487 1695-87 | 41 |
| 487 1695-91 | 29 |
| 487 1695-92 | 29 |
| 487 1697-04 | 7 |
| 487 1697-04 | 9 |
| 487 1697-07 | 49 |
| 487 1697-07 | 51 |
| 487 1697-07 | 53 |
| 487 1701-22 | 55 |
| 487 1701-22 | 57 |
| 487 1701-41 | 9 |
| 487 1701-41 | 17 |

# Numerical index/Numerical index


| Art.No/Réf. article | Page/Page |
|---|---|
| 487 1701-46 | 55 |
| 487 1701-46 | 57 |
| 487 1702-09 | 21 |
| 487 1702-09 | 23 |
| 487 1702-09 | 25 |
| 487 1702-09 | 27 |
| 487 1702-60 | 21 |
| 487 1702-68 | 21 |
| 487 1702-68 | 23 |
| 487 1702-68 | 25 |
| 487 1702-68 | 27 |
| 487 1702-70 | 25 |
| 487 1703-23 | 21 |
| 487 1703-23 | 23 |
| 487 1703-70 | 21 |
| 487 1703-80 | 23 |
| 487 1703-81 | 23 |
| 487 1703-82 | 21 |
| 487 1703-82 | 23 |
| 487 1703-83 | 21 |
| 487 1703-83 | 25 |
| 487 1703-96 | 33 |
| 487 1703-98 | 41 |
| 487 1703-99 | 35 |
| 487 1703-99 | 41 |
| 487 1703-99 | 67 |
| 487 1703-99 | 71 |
| 487 1704-25 | 21 |
| 487 1704-25 | 23 |
| 487 1704-25 | 25 |
| 487 1704-25 | 27 |
| 487 1707-11 | 7 |
| 487 1707-11 | 9 |
| 487 1707-11 | 13 |
| 487 1707-12 | 7 |
| 487 1707-12 | 19 |
| 487 1714-38 | 29 |
| 487 1715-85* | 49 |
| 487 1715-85* | 51 |
| 487 1715-85* | 53 |
| 487 1715-86* | 49 |
| 487 1715-86* | 51 |
| 487 1715-86* | 53 |
| 487 1715-89* | 49 |
| 487 1715-89* | 51 |
| 487 1715-89* | 53 |
| 487 1715-90* | 49 |
| 487 1715-90* | 51 |
| 487 1715-90* | 53 |
| 487 1715-91* | 49 |
| 487 1715-91* | 51 |
| 487 1715-91* | 53 |
| 487 1730-00 | 43 |
| 487 1730-00 | 45 |
| 487 1756-01 | 31 |
| 487 1756-02 | 31 |
| 487 1756-25 | 7 |
| 487 1756-29 | 19 |
| 487 1756-30 | 7 |
| 487 1756-30 | 9 |
| 487 1756-30 | 13 |
| 487 1756-35 | 15 |
| 487 1756-35 | 17 |
| 487 1756-45 | 15 |
| 487 1756-51 | 15 |
| 487 1756-79 | 29 |
| 487 1760-31 | 17 |
| 487 1763-05 | 7 |
| 487 1763-05 | 9 |
| 487 1763-05 | 13 |
| 487 1763-06 | 7 |
| 487 1763-06 | 9 |
| 487 1763-06 | 13 |
| 487 1763-08 | 29 |
| 487 1763-15 | 15 |
| 487 1763-15 | 17 |
| 487 1763-54 | 15 |
| 487 1763-54 | 17 |
| 487 1763-61 | 21 |
| 487 1763-61 | 25 |
| 487 1763-65 | 21 |
| 487 1764-09 | 55 |
| 487 1764-35 | 7 |
| 487 1764-35 | 9 |
| 487 1764-35 | 13 |
| 487 1775-20 | 7 |
| 487 1775-20 | 9 |
| 487 1775-20 | 13 |
| 487 1781-04 | 49 |
| 487 1781-04 | 51 |
| 487 1781-04 | 53 |
| 487 1781-09 | 49 |
| 487 1781-11 | 49 |
| 487 1781-11 | 51 |
| 487 1781-11 | 53 |
| 487 1781-13 | 49 |
| 487 1781-13 | 51 |
| 487 1781-13 | 53 |
| 487 1781-15 | 49 |
| 487 1781-15 | 51 |
| 487 1781-15 | 53 |
| 487 1781-16 | 49 |
| 487 1781-16 | 51 |
| 487 1781-16 | 53 |
| 487 1781-17 | 49 |
| 487 1781-17 | 51 |
| 487 1781-17 | 53 |
| 487 1781-18 | 49 |
| 487 1781-19 | 49 |
| 487 1781-19 | 51 |
| 487 1781-19 | 53 |
| 487 1781-22 | 51 |
| 487 1781-22 | 53 |
| 487 1781-23 | 29 |
| 487 1781-51 | 59 |
| 487 1781-51 | 61 |
| 487 1781-57 | 69 |
| 487 1781-57 | 71 |
| 487 1781-57 | 73 |
| 487 1781-59 | 59 |
| 487 1781-59 | 61 |
| 487 1781-82 | 59 |
| 487 1781-82 | 61 |
| 487 1781-83 | 59 |
| 487 1781-83 | 61 |
| 487 1781-87 | 59 |
| 487 1781-87 | 61 |
| 487 1781-93 | 59 |
| 487 1781-93 | 61 |
| 487 1794-56 | 33 |
| 487 1794-56 | 35 |
| 487 1813-10 | 17 |
| 487 1813-15 | 9 |
| 487 1813-15 | 13 |
| 487 1813-43 | 17 |
| 487 1814-05 | 7 |
| 487 1814-50 | 7 |
| 487 1815-01 | 55 |
| 487 1815-04 | 55 |
| 487 1815-28 | 55 |
| 487 1815-29 | 55 |
| 487 1815-30 | 55 |
| 487 1816-21 | 29 |
| 487 1816-57 | 9 |
| 487 1816-57 | 13 |
| 487 1816-72 | 29 |
| 487 1816-78 | 33 |
| 487 1816-78 | 37 |
| 487 1816-78 | 41 |
| 487 1816-79 | 37 |
| 487 1816-89 | 55 |
| 487 1818-15 | 7 |
| 487 1818-24 | 19 |
| 487 1820-07 | 65 |
| 487 1820-07 | 67 |
| 487 1820-07 | 69 |
| 487 1820-07 | 71 |
| 487 1820-09 | 63 |
| 487 1820-11 | 31 |
| 487 1820-17 | 7 |
| 487 1820-17 | 9 |
| 487 1820-17 | 13 |
| 487 1820-30 | 33 |
| 487 1820-30 | 37 |
| 487 1820-30 | 41 |
| 487 1820-34 | 31 |
| 487 1820-35 | 31 |
| 487 1820-37 | 29 |
| 487 1820-37 | 43 |
| 487 1820-37 | 45 |
| 487 1820-45 | 29 |
| 487 1820-59 | 7 |
| 487 1820-78 | 29 |
| 487 1820-78 | 31 |
| 487 1820-79 | 31 |
| 487 1820-84 | 7 |
| 487 1820-84 | 9 |
| 487 1820-84 | 13 |
| 487 1820-92 | 31 |
| 487 1820-93 | 31 |
| 487 1820-94 | 31 |
| 487 1820-97 | 15 |
| 487 1821-01 | 29 |
| 487 1827-05 | 7 |
| 487 1828-05 | 7 |
| 487 1829-09 | 29 |
| 487 1829-14 | 29 |
| 487 1829-50 | 33 |
| 487 1829-50 | 37 |
| 487 1829-50 | 41 |
| 487 1829-52 | 33 |
| 487 1829-53 | 35 |
| 487 1829-53 | 37 |
| 487 1829-53 | 41 |
| 487 1829-74 | 33 |
| 487 1829-74 | 37 |
| 487 1829-74 | 41 |
| 487 1831-00 | 31 |
| 487 1831-05 | 33 |
| 487 1831-05 | 37 |
| 487 1831-05 | 41 |
| 487 1831-07 | 31 |
| 487 1831-11 | 49 |
| 487 1831-11 | 51 |
| 487 1831-11 | 53 |
| 487 1831-13 | 29 |
| 487 1831-29 | 63 |
| 487 1831-29 | 65 |
| 487 1831-29 | 67 |
| 487 1831-29 | 69 |
| 487 1831-29 | 71 |
| 487 1831-30 | 63 |
| 487 1831-30 | 65 |
| 487 1831-30 | 67 |
| 487 1831-30 | 69 |
| 487 1831-30 | 71 |
| 487 1831-41 | 7 |
| 487 1831-41 | 9 |
| 487 1831-41 | 13 |
| 487 1831-42 | 7 |
| 487 1831-42 | 9 |
| 487 1831-42 | 13 |
| 487 1831-48 | 15 |
| 487 1831-48 | 17 |
| 487 1831-63 | 7 |
| 487 1831-63 | 9 |
| 487 1831-63 | 59 |
| 487 1831-72 | 29 |
| 487 1831-79 | 33 |
| 487 1831-79 | 37 |
| 487 1831-79 | 41 |
| 487 1870-08 | 31 |
| 487 1875-00 | 13 |
| 487 1875-00 | 19 |
| 487 1875-05 | 15 |
| 487 1875-05 | 17 |
| 487 1875-41 | 17 |
| 487 1875-55 | 17 |
| 487 1875-63 | 17 |
| 487 1897-01 | 63 |
| 487 1897-01 | 65 |
| 487 1897-01 | 67 |
| 487 1897-01 | 69 |
| 487 1897-01 | 71 |
| 487 1897-02 | 63 |
| 487 1897-02 | 65 |
| 487 1897-02 | 67 |
| 487 1897-02 | 69 |
| 487 1897-02 | 71 |
| 487 1897-03 | 65 |
| 487 1897-03 | 67 |
| 487 1897-04 | 63 |
| 487 1897-04 | 65 |
| 487 1897-04 | 67 |
| 487 1897-04 | 69 |
| 487 1897-04 | 71 |
| 487 1897-05 | 29 |
| 487 1897-08 | 63 |
| 487 1897-08 | 65 |
| 487 1897-08 | 67 |
| 487 1897-08 | 69 |
| 487 1897-08 | 71 |
| 487 1897-09 | 21 |
| 487 1897-09 | 25 |

# Numerical index/Numerical index


| Art.No/Réf. article | Page/Page | Art.No/Réf. article | Page/Page | Art.No/Réf. article | Page/Page | Art.No/Réf. article | Page/Page |
|---|---|---|---|---|---|---|---|
| 487 1897-10 | 55 | 487 1946-53 | 7 | 487 2221-05 | 9 | 487 2368-08 | 47 |
| 487 1897-13 | 55 | 487 1946-53 | 19 | 487 2221-05 | 13 | 487 2368-19 | 53 |
| 487 1897-14 | 55 | 487 1959-10 | 7 | 487 2221-40 | 9 | 487 2368-20 | 13 |
| 487 1897-22 | 55 | 487 1959-11 | 61 | 487 2221-40 | 13 | 487 2368-21 | 13 |
| 487 1897-54 | 7 | 487 1972-09 | 33 | 487 2221-55 | 9 | 487 2368-21 | 61 |
| 487 1897-56 | 7 | 487 1972-09 | 37 | 487 2221-55 | 13 | 487 2368-22 | 53 |
| 487 1897-56 | 9 | 487 1973-35 | 7 | 487 2222-05 | 9 | 487 2368-25 | 13 |
| 487 1897-58 | 7 | 487 1973-35 | 9 | 487 2222-05 | 13 | 487 2368-28 | 13 |
| 487 1897-58 | 9 | 487 1973-38 | 55 | 487 2222-40 | 9 | 487 2368-28 | 61 |
| 487 1897-60 | 13 | 487 1973-44 | 61 | 487 2222-40 | 13 | 487 2368-30 | 13 |
| 487 1897-62 | 35 | 487 1974-00 | 19 | 487 2222-55 | 9 | 487 2368-31 | 47 |
| 487 1897-62 | 41 | 487 1974-02 | 19 | 487 2222-55 | 13 | 487 2368-32 | 41 |
| 487 1897-86 | 55 | 487 1974-03 | 19 | 487 2226-58 | 23 | 487 2368-33 | 13 |
| 487 1897-95 | 69 | 487 1974-05 | 19 | 487 2226-59 | 27 | 487 2368-33 | 61 |
| 487 1897-95 | 71 | 487 1974-96 | 19 | 487 2226-60 | 23 | 487 2368-34 | 53 |
| 487 1897-95 | 73 | 487 1975-16 | 15 | 487 2226-61 | 23 | 487 2368-38 | 57 |
| 487 1898-10 | 15 | 487 1975-82 | 17 | 487 2229-05 | 9 | 487 2368-41 | 23 |
| 487 1898-10 | 17 | 487 1975-84 | 17 | 487 2229-05 | 13 | 487 2368-41 | 27 |
| 487 1898-83 | 31 | 487 1975-85 | 17 | 487 2229-40 | 9 | 487 2368-55 | 23 |
| 487 1899-88 | 33 | 487 1975-87 | 17 | 487 2229-40 | 13 | 487 2368-55 | 27 |
| 487 1899-88 | 67 | 487 1975-89 | 17 | 487 2229-55 | 9 | 487 2368-63 | 23 |
| 487 1899-88 | 71 | 487 1975-91 | 17 | 487 2229-55 | 13 | 487 2368-63 | 27 |
| 487 1899-89 | 67 | 487 1975-92 | 17 | 487 2260-74 | 17 | 487 2368-99 | 13 |
| 487 1899-89 | 71 | 487 1975-94 | 17 | 487 2290-92 | 29 | 487 3390-02 | 17 |
| 487 1899-91 | 33 | 487 1975-96 | 17 | 487 2290-98 | 57 | 487 7057-40 | 23 |
| 487 1899-91 | 41 | 487 1976-09 | 35 | 487 2299-01 | 73 | 487 7057-40 | 27 |
| 487 1899-95 | 67 | 487 1976-10 | 33 | 487 2299-02 | 73 | 488 0118-99 | 35 |
| 487 1899-95 | 71 | 487 1976-40 | 33 | 487 2299-03 | 73 | 488 0118-99 | 37 |
| 487 1899-98 | 33 | 487 1976-40 | 37 | 487 2299-04 | 73 | 488 0118-99 | 41 |
| 487 1899-98 | 35 | 487 1976-41 | 35 | 487 2299-05 | 73 | 488 0139-16 | 33 |
| 487 1899-98 | 67 | 487 1976-41 | 39 | 487 2299-08 | 73 | 488 0139-16 | 37 |
| 487 1899-98 | 71 | 487 1976-74 | 33 | 487 2299-09 | 73 | 488 0139-16 | 41 |
| 487 1920-05 | 19 | 487 1976-74 | 37 | 487 2299-12 | 73 | 488 0140-40 | 29 |
| 487 1924-72 | 21 | 487 1976-74 | 41 | 487 2299-13 | 73 | 488 0142-20 | 33 |
| 487 1924-72 | 23 | 487 1976-82 | 29 | 487 2299-17 | 73 | 488 0142-20 | 37 |
| 487 1934-50 | 57 | 487 2199-30 | 31 | 487 2299-18 | 73 | 488 0142-20 | 41 |
| 487 1934-71 | 7 | 487 2199-31 | 31 | 487 2299-20 | 73 | 488 0142-30 | 33 |
| 487 1934-71 | 9 | 487 2204-01 | 33 | 487 2299-21 | 73 | 488 0142-30 | 37 |
| 487 1934-71 | 13 | 487 2204-01 | 37 | 487 2299-22 | 73 | 488 0142-30 | 41 |
| 487 1935-11 | 39 | 487 2204-03 | 33 | 487 2299-39 | 73 | 488 0386-13 | 15 |
| 487 1935-32 | 15 | 487 2204-03 | 37 | 487 2299-44 | 73 | 488 6571-02 | 21 |
| 487 1935-32 | 17 | 487 2216-05 | 19 | 487 2299-51 | 73 | 488 6571-02 | 23 |
| 487 1935-39 | 55 | 487 2216-41 | 19 | 487 2299-52 | 73 | 488 8334-16 | 43 |
| 487 1935-39 | 57 | 487 2216-55 | 19 | 487 2299-54 | 73 | 488 8334-16 | 45 |
| 487 1935-43 | 57 | 487 2216-73 | 19 | 487 2299-55 | 73 | 489 0112-61 | 21 |
| 487 1935-59 | 29 | 487 2217-01 | 63 | 487 2299-70 | 73 | 489 0112-61 | 23 |
| 487 1935-60* | 57 | 487 2217-20 | 47 | 487 2299-72 | 73 | 489 0112-61 | 25 |
| 487 1935-76* | 41 | 487 2217-21 | 47 | 487 2299-74 | 73 | 489 0112-61 | 27 |
| 487 1935-77* | 33 | 487 2217-24 | 45 | 487 2299-76 | 57 | 489 7194-20 | 7 |
| 487 1935-77* | 35 | 487 2217-24 | 47 | 487 2299-76 | 73 | 489 7194-20 | 9 |
| 487 1935-77* | 37 | 487 2217-24 | 53 | 487 2317-04 | 29 | 489 7194-20 | 43 |
| 487 1935-77* | 41 | 487 2217-25 | 45 | 487 2317-76 | 17 | 489 7194-20 | 45 |
| 487 1935-78* | 37 | 487 2217-25 | 47 | 487 2336-43 | 23 | 489 7194-20 | 47 |
| 487 1935-78* | 41 | 487 2217-25 | 53 | 487 2336-43 | 25 | 647 1209-42 | 19 |
| 487 1935-79* | 39 | 487 2217-26 | 45 | 487 2336-60 | 17 | 647 1209-42 | 23 |
| 487 1935-79* | 41 | 487 2217-28 | 9 | 487 2336-61 | 17 | 647 1209-42 | 27 |
| 487 1935-80* | 41 | 487 2217-29 | 9 | 487 2358-70 | 37 | 724 1333-01 | 15 |
| 487 1935-81* | 39 | 487 2218-05 | 9 | 487 2368-01 | 23 | 725 2366-51 | 33 |
| 487 1935-81* | 41 | 487 2218-55 | 9 | 487 2368-01 | 27 | 725 2366-51 | 37 |
| 487 1935-84* | 41 | 487 2218-73 | 9 | 487 2368-02 | 73 | 725 2366-51 | 41 |
| 487 1935-86* | 41 | 487 2219-16 | 7 | 487 2368-03 | 13 | 725 2370-51 | 33 |
| 487 1935-87* | 57 | 487 2219-16 | 9 | 487 2368-04 | 13 | 725 2370-51 | 35 |
| 487 1946-05 | 7 | 487 2219-16 | 13 | 487 2368-04 | 61 | 725 2370-51 | 39 |
| 487 1946-52 | 7 | 487 2219-22 | 9 | 487 2368-05 | 23 | 725 2370-51 | 41 |
| 487 1946-52 | 9 | 487 2219-23 | 9 | 487 2368-05 | 27 | 725 2451-51 | 33 |
| 487 1946-52 | 13 | 487 2219-31 | 17 | 487 2368-07 | 47 | 725 2451-51 | 37 |

# Numerical index/Numerical index


| Art.No/Réf. article | Page/Page | Art.No/Réf. article | Page/Page | Art.No/Réf. article | Page/Page | Art.No/Réf. article | Page/Page |
|---|---|---|---|---|---|---|---|
| 725 2497-51 | 33 | 767 5111-09 | 71 | | | | |
| 725 2497-51 | 37 | 767 5113-09 | 65 | | | | |
| 725 2497-51 | 41 | 767 5113-09 | 67 | | | | |
| 725 2538-51 | 33 | 767 5113-09 | 69 | | | | |
| 725 2538-51 | 37 | 767 5113-09 | 71 | | | | |
| 725 2538-51 | 41 | | | | | | |
| 731 2316-01 | 33 | | | | | | |
| 731 2316-01 | 37 | | | | | | |
| 731 2318-01 | 35 | | | | | | |
| 731 2318-01 | 37 | | | | | | |
| 731 2318-01 | 41 | | | | | | |
| 731 2322-01 | 33 | | | | | | |
| 731 2322-01 | 37 | | | | | | |
| 731 2322-01 | 41 | | | | | | |
| 731 2324-01 | 41 | | | | | | |
| 731 5312-01 | 15 | | | | | | |
| 731 5312-01 | 17 | | | | | | |
| 732 2112-01 | 15 | | | | | | |
| 732 2116-01 | 33 | | | | | | |
| 732 2116-01 | 35 | | | | | | |
| 732 2116-01 | 39 | | | | | | |
| 732 2116-01 | 41 | | | | | | |
| 732 2118-01 | 29 | | | | | | |
| 732 2118-01 | 31 | | | | | | |
| 732 2118-01 | 33 | | | | | | |
| 732 2118-01 | 37 | | | | | | |
| 734 1164-31 | 31 | | | | | | |
| 734 1164-31 | 33 | | | | | | |
| 734 1164-31 | 37 | | | | | | |
| 734 1173-01 | 33 | | | | | | |
| 734 1173-01 | 37 | | | | | | |
| 734 1173-01 | 41 | | | | | | |
| 735 3122-00 | 33 | | | | | | |
| 735 3122-00 | 37 | | | | | | |
| 735 3122-00 | 41 | | | | | | |
| 738 2104-04 | 33 | | | | | | |
| 738 2104-04 | 37 | | | | | | |
| 738 2104-04 | 41 | | | | | | |
| 762 1137-10 | 7 | | | | | | |
| 762 1137-10 | 9 | | | | | | |
| 762 1137-10 | 13 | | | | | | |
| 762 1137-10 | 55 | | | | | | |
| 762 1168-00 | 59 | | | | | | |
| 762 1191-10 | 7 | | | | | | |
| 762 1191-10 | 9 | | | | | | |
| 762 1191-10 | 55 | | | | | | |
| 762 1191-10 | 73 | | | | | | |
| 762 1212-10 | 47 | | | | | | |
| 762 1212-10 | 63 | | | | | | |
| 762 1212-10 | 65 | | | | | | |
| 762 1212-10 | 67 | | | | | | |
| 762 1212-10 | 69 | | | | | | |
| 762 1212-10 | 71 | | | | | | |
| 762 7110-80 | 43 | | | | | | |
| 762 7110-80 | 45 | | | | | | |
| 762 8221-91 | 63 | | | | | | |
| 767 5101-92 | 63 | | | | | | |
| 767 5101-92 | 69 | | | | | | |
| 767 5101-92 | 71 | | | | | | |
| 767 5101-92 | 73 | | | | | | |
| 767 5102-92 | 69 | | | | | | |
| 767 5102-92 | 71 | | | | | | |
| 767 5111-09 | 63 | | | | | | |
| 767 5111-09 | 65 | | | | | | |
| 767 5111-09 | 67 | | | | | | |
| 767 5111-09 | 69 | | | | | | |

**WASCOMAT**

461 Doughty Blvd., Inwood, L.I., N.Y. 11096-0338
Telephone: 516-371-4400
Parts and Service FAX: 516-371-4029
Sales and Administration FAX: 516-371-4204