ENCORE
by Laundrylux

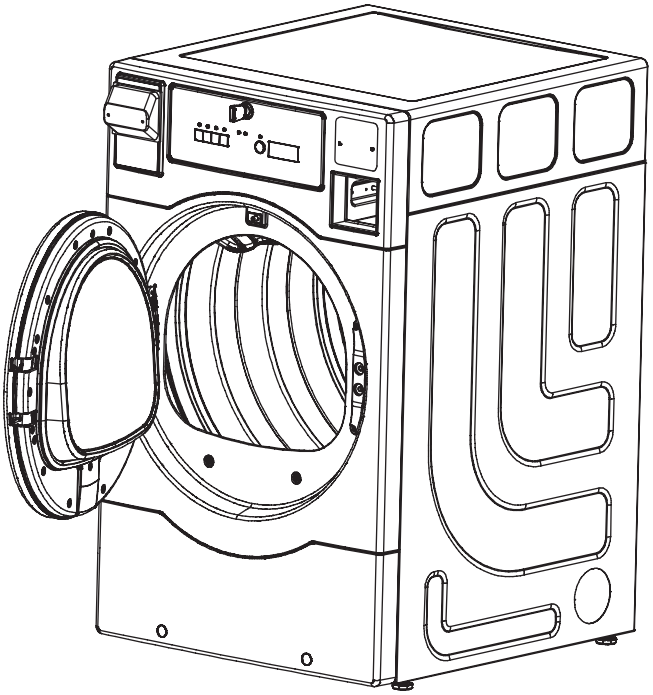

MODEL NO. DLHF0315
DLHS0315

DRYER SPARE PARTS MANUAL

DOC NO. 090833
EDITION 3.2021

Laundrylux

Model Numbers

Electric

DLHF0315EMI
DLHF0315E
DLHS0315EMI
DLHS0315E

Gas

DLHF0315GMI
DLHF0315G
DLHS0315GMI
DLHS0315G

Intentionally Blank

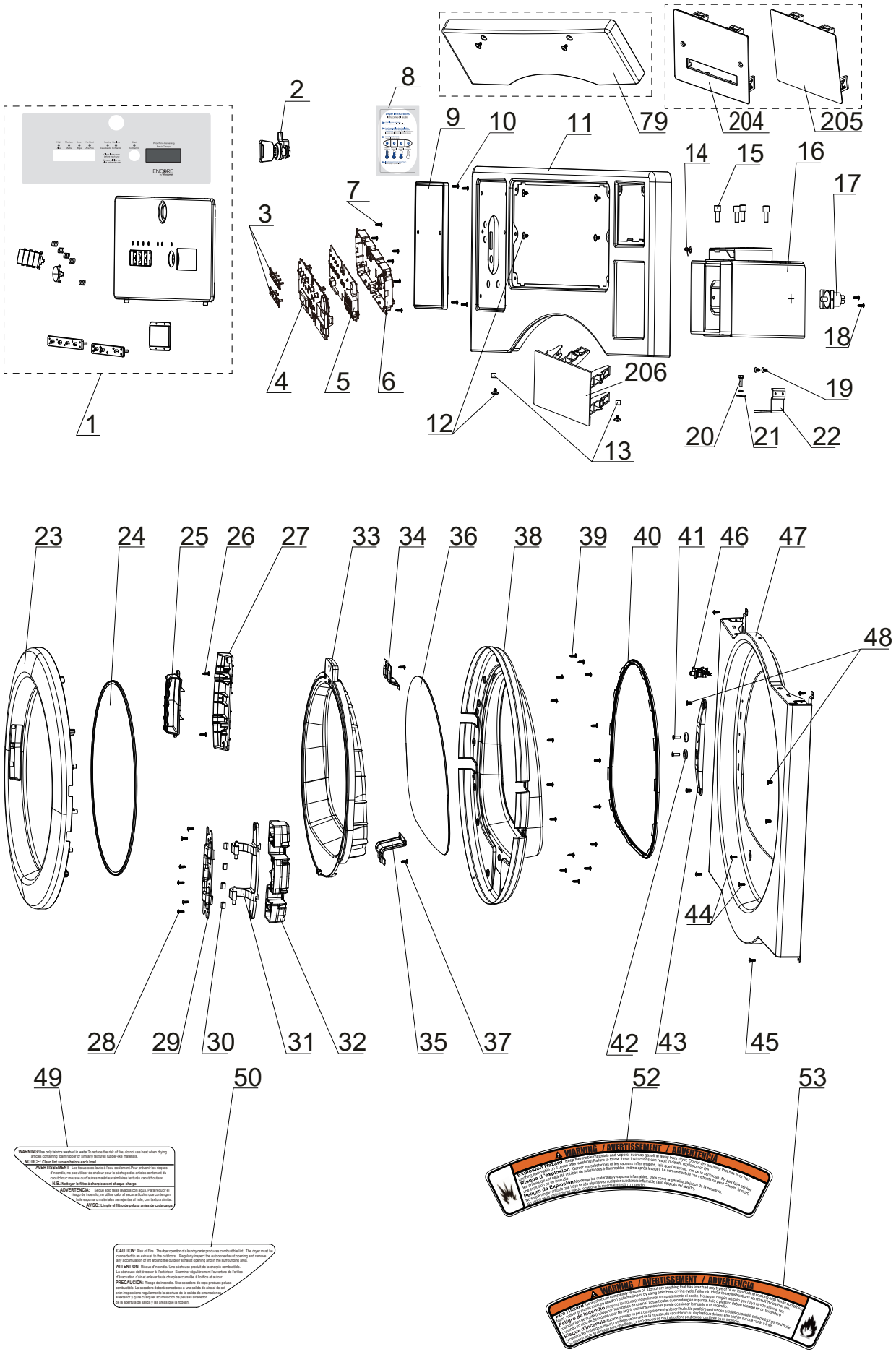
1
2
3
4
5
6
7
8
9
10
11
12
13
14
15
16
17
18
19
20
21
22
23
24
25
26
27
28
29
30
31
32
33
34
35
36
37
38
39
40
41
42
43
44
45
46
47
48
49
50
52
53
79
204
205
206

Item #	Qty	Part #	Description	Remarks
1	1	0180801027	ASSY,FRONT CONTROL ENCORE DRYER (DLH0315)	DLH0315 Encore Only
2	1	0020811861	LOCK,W/KEY(MKE)	
3	2	0020300760	KEYPAD,CONTROL BOARD,DRYER	
4	1	0020203390	COVER,CONTROL BOARD,DRYER	
5	1	0181800024B	CIRCUIT-BOARD,DISPLAY-DRYER	
6	1	0020203389	COVER,BACK,CONTROL BOARD,DRYER	
7	6	00330802005A	SCREW,ST4*12,DRYER	
8	1	0180500851	LABEL,INSTRUCTION,DLH0315 DRYER	DLH0315 Encore Only
9	1	0180200415	PLATE,FRONT CONTROL PANEL BLOCK,DRYER	
10	4	00330802004A	SCREW,ST4*10,DRYER	
11	1	0180800916	FRAME,PANEL,CONTROL,DRYER (DLHF)	For DLHS See #79A
12	6	00216910320111A	SCREW,M3.5*12,DRYER	
13	2	0180200347	CLIP,PANEL,DRYER	
14	1	00297019691400	TIE,WIRING,CONTROL BOARD, DRYER	
15	4	00330810063	SCREW,M8*20,DRYER	
16	1	0180800921	HOUSING,COIN VAULT,DRYER	
17	1	0034000710	ASSY,S2 SERVICE MODE SWITCH,DRYER	
18	2	00330802071A	SCREW,ST4*10,DRYER	
19	2	0020600010A	SCREW,M4*16,DRYER	
20	1	00330812014A	SCREW,M5*12,DRYER	
21	1	00215000669600A	GASKET,SCREW,BOTTOM,MONEY BOX PLATE	
22	1	0180100242	CLIP,MONEY BOX,DRYER	
23	1	0180200333	FRAME,OUTER,DOOR,DRYER DLH0315	DLH0315 Encore Only
24	1	0180200335	FRAME,WINDOW,GLASS,DOOR,DRYER	
25	1	0180200332	DOOR,HANDLE,DRYER	
26	2	00330802005A	SCREW,ST4*12,DRYER	
27	1	0180200331	HANDLE,DOOR,DRYER	
28	6	00330802005A	SCREW,ST4*12,DRYER	
29	1	0180100233	HINGE-COVER,DOOR,DRYER	
30	4	0020201212	BUSHING,DOOR,DRYER	
31	1	0180100283	HINGE,DOOR,DRYER	
32	1	0180200330	HINGE-FRAME,DOOR,DRYER	
33	1	0180200334	FRAME,GLASS,DOOR,DRYER	
34	1	0180100231	GLASS,SUPPORT BRACKET,TOP,DOOR,DRYER	
35	1	0180100230	GLASS,SUPPORT BRACKET,BOTTOM,DOOR,DRYER	
36	1	0181400006	GLASS,DOOR,DRYER	
37	2	00216910320111A	SCREW,M3.5*12,DRYER	
38	1	0180800914	BACK-FRAME,DOOR,DRYER	
39	18	0020600164	SCREW,ST4*25,DRYER	
40	1	0180300080	SEAL,DOOR,DRYER	
41	2	00330802078A	SCREW,MAGNET,DOOR,DRYER	
42	2	0184000035	MAGNET,DOOR,DRYER	
43	1	0180200327	FRAME,MAGNET,DOOR,DRYER	
44	2	0020600029	SCREW,ST4.2*12,DRYER	
45	4	00216910320111A	SCREW,M3.5*12,DRYER	
46	1	0184000030A	SWITCH,DOOR,DRYER	
47	1	0180800908	PANEL,FRONT,DRYER	
48	4	00330802023A	SCREW,ST4.8*16,DRYER	
49	1	0180500772B	A,LABEL,WARNING,DRYER	
50	1	0180500772C	LABEL,CAUTION,DRYER	
52	1	0180500771D	LABEL,EXPLOSION,WARNING,DRYER	
53	1	0180500771C	LABEL,WARNING,FIRE,DRYER	
204	---	0180200580	PLATE,DC,DLH DRYER	
205	---	0180200582	PLATE,OPL,DLH DRYER	
206	---	0020205426A	PLATE,COIN-BOX BLOCKOUT	

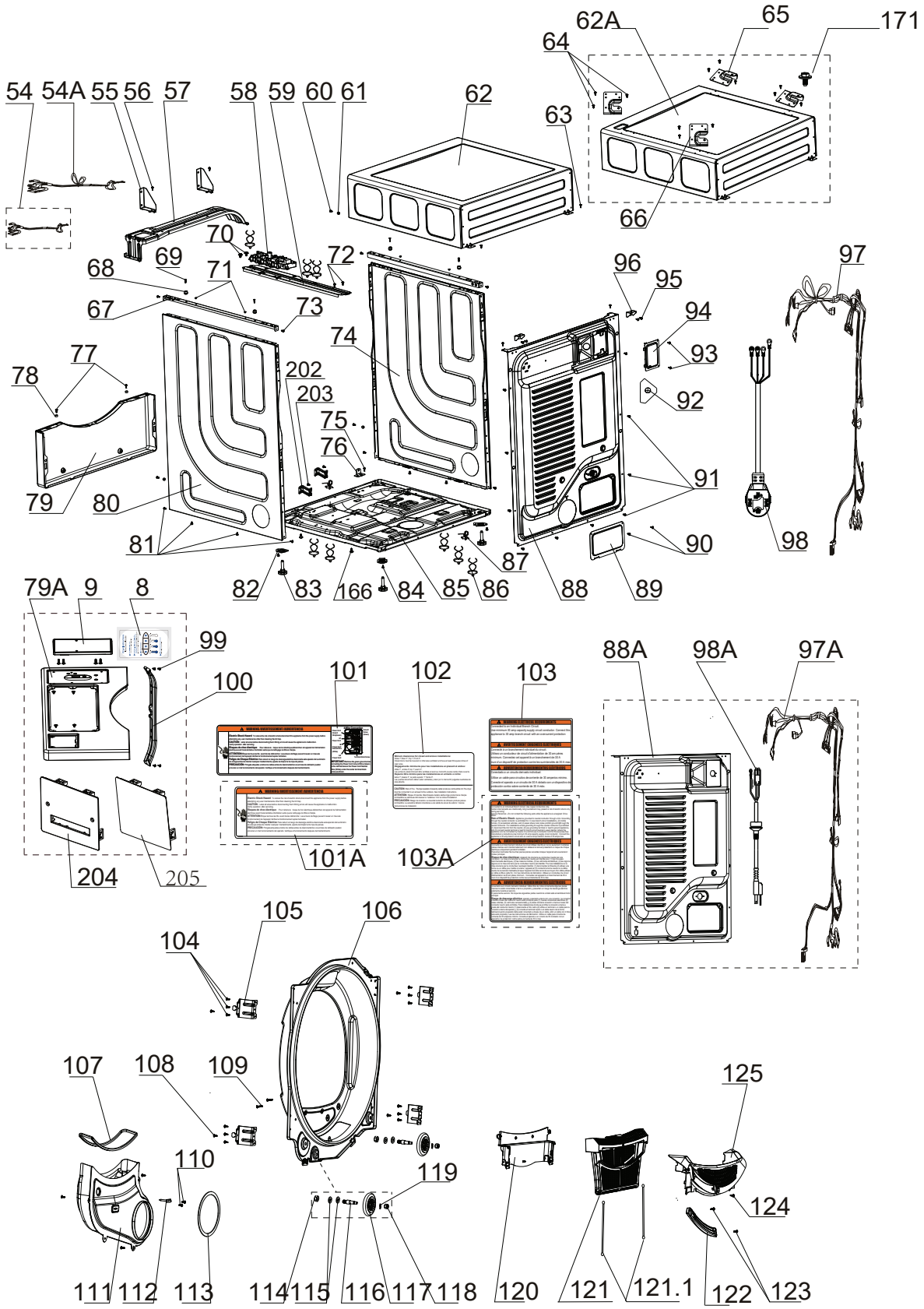
54
54A
55
56
57
58
59
60
61
62
62A
63
64
65
66
67
68
69
70
71
72
73
74
75
76
77
78
79
80
81
82
83
84
85
86
87
88
89
90
91
92
93
94
95
96
97
98
99
100
101
101A
102
103
103A
104
105
106
107
108
109
110
111
112
113
114
115
116
117
118
119
120
121
121.1
122
123
124
125
171
202
203
204
205
166
79A
9
8
88A
98A
97A

Item #	Qty	Part #	Description	Remarks
54	1	0180400035	HARNESS,PCB,DRYER	
54A	1	0180400035A	HARNESS,DRYER COIN BOTTOM CONTROL (DLHS)	DLHS DRYERS
55	2	0180100228	SUPPORT-BRACKET,TOP PANEL,DRYER	
56	2	00216910320111A	SCREW,M3.5*12,DRYER	
57	1	0180100226	CROSSBAR,TOP,DRYER	
58	1	0181800027B	BOARD,CIRCUIT,POWER,DRYER	Use with firmware 0727 or later
59	1	0180100203	CROSSBEAM,MOUNTING,POWER MODULE,DRYER	
60	2	00216910320111A	SCREW,M3.5*12,DRYER	
61	6	0180200347	CLIP,PANEL,DRYER	
62	1	0180800924	PANEL,TOP,DRYER	
62A	1	0180800907	PANEL,STACKING,TOP,DRYER	
63	2	0020600179	SCREW,M4*10,DRYER	
64	12	00216910320111A	SCREW,M3.5*12,DRYER	
65	2	0180100313	BRACKET,STACK,LEFT,DRYER	
66	2	0180100316	BRACKET,STACK,RIGHT,DRYER	
67	2	0180100225	PLATE,REINFORCING,SIDE PANEL,DRYER	
68	4	0180200322	PIN,SIDE PANEL,DRYER	
69	4	00330802095A	SCREW,M4*10,DRYER	
70	2	00330812014A	SCREW,M5*12,DRYER	
71	4	00217890212200	RIVET,SIDE PANEL,DRYER	
72	2	00216910320111A	SCREW,M3.5*12,DRYER	
73	4	00216910320111A	SCREW,M3.5*12,DRYER	
74	1	0180800911	SIDE-PANEL,LEFT,DRYER	
75	1	0020600179	SCREW,M4*10,DRYER	
76	1	0180100229	SUPPORT,BLOWER HOUSING,DRYER	
77	2	00216910320111A	SCREW,M3.5*12,DRYER	
78	2	180200347	CLIP,PANEL,DRYER	
79	1	180800915	PANEL,TOE,DRYER	
79A	1	180800923	PANEL,TOP,BOTTOM CONTROL DRYER (DLHS)	For DLHF see #11
80	1	0180800912	PANEL,SIDE,RIGHT,DRYER	
81	8	0020600179	SCREW,M4*10,DRYER	
82	4	0180100312	BASEBOARD,ADJUSTABLE,LEVELLING LEGS,DRYER	
83	4	0020300332	LEGS,LEVELING,DRYER	
84	4	0020600179	SCREW,M4*10,DRYER	
85	1	0180100223	PANEL,BOTTOM,CHASSIS,DRYER	
86	5	00215200015200A	TIE,WIRING,DRYER	
87	3	0030203806	TIE,ZIP,WIRING,DRYER	
88	1	180100217	REAR-PANEL,DRYER	
88A	1	0180100217A	LABEL,EXPLOSION,WARNING,DRYER	DLHG GAS Models
89	1	0180100219	COVER-PLATE,REAR,BOTTOM,DRYER	
90	2	00216910320111A	SCREW,M3.5*12,DRYER	
91	12	00216910320111A	SCREW,M3.5*12,DRYER	
92	1	0180300028	FABRIC,FIRE SAFE,DRYER	
93	2	00216910320111A	SCREW,M3.5*12,DRYER	
94	1	0180100218	COVER,TERMINAL BLOCK,DRYER	
95	2	00216910320111A	SCREW,M3.5*12,DRYER	
96	2	0180100220	SUPPORT-BRACKET,TOP PANEL,DRYER	
97	1	0180400010FA	HARNESS,ELECTRIC DRYER MAIN POWER (DLHE)	DLHE ELECTRIC Models
97A	1	0180400037	HARNESS,GAS DRYER MAIN POWER (DLHG)	DLHG GAS Models
98	1	0030400594A	CORD,ELECTRIC,DRYER,(DLHE) W/NEMA 14-30 PLUG	Power Cord DLHE ELECTRIC models with NEMA 14-30 plug (4-prong)
98A	1	0020400196L	CORD,GAS,DRYER GAS (DLHG)	Power Cord GAS DLHG Models
99	4	00216910320111A	SCREW,M3.5*12,DRYER	
100	1	180801047	FRAME,BOTTOM,DRYER	
101	1	0180500771J	LABEL,WIRING,DRYER ELECTRIC,DLH317E,DLH817E	
101A	1	0180500771L	LABEL,SAFETY,DRYER GAS,DLH317G,DLH817G	
102	1	0180500772A	LABEL,SECURITY,DRYER	
103	1	0180500771K	LABEL,SHOCK,ELECTRIC DRYER	
103B	1	0180500771B	LABEL,SHOCK,ELECTRIC DRYER	
104	12	0020600179	SCREW,M4*10,DRYER	
105	4	0180100234	CLIP,SUPPORT PLATE,FRONT PANEL,DRYER	
106	1	0180800910	SUPPORT-PLATE,FRONT PANEL,DRYER	
107	2	0030300337	SEAL,DRYER	
108	16	0020600179	SCREW,M4*10,DRYER	
109	2	00330802507A	SCREW,ST4*20,DRYER	
110	2	00216910320111A	SCREW,M3.5*12,DRYER	
111	1	0180800691	DUCT,AIR,DRYER	
112	1	0020400466	SENSOR,OUTLET,DRYER	
113	1	0030300337	SEAL,DRYER	
114	2	0000600001	NUT,ROLLER,DRYER	
115	4	00215000669600A	GASKET,ROLLER,DRUM,DRYER	
116	2	0180100267	SHAFT,ROLLER,DRUM,DRYER	
117	2	0180800201A	ROLLER,DRUM,DRYER	
118	2	00299240024000A	NUT,REAR,ROLLER,DRUM	
119	2	00215000000002A	SCREW,M5	
120	1	0180200326A	FRAME,FILTER,BACK,DRYER	
121	1	180200323	SCREEN,LINT DRYER	
121.1	2	0180200466	TETHER,	
122	1	0180200324A	CONNECTOR,LINT FILT,DRYER	
123	2	0020600029	SCREW,SCREEN,LINT,DRYER	
124	1	00216910320111A	SCREW,M3.5*12,DRYER	
125	1	0180200325A	FRAME,LINT,SCREEN,DRYER	
171	1	00330812014A	SCREW,M5*12,DRYER	
202	2	0180100248	BRACKET,SUPPORT,DRYER	
203	2	00216910320111A	SCREW,FRONT PANEL,DRYER	

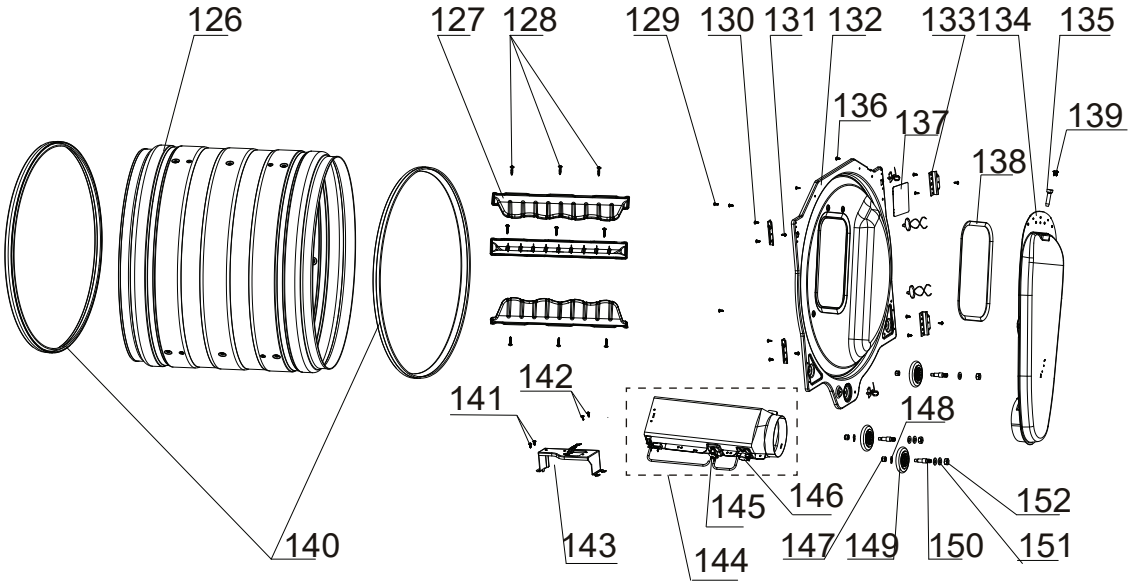

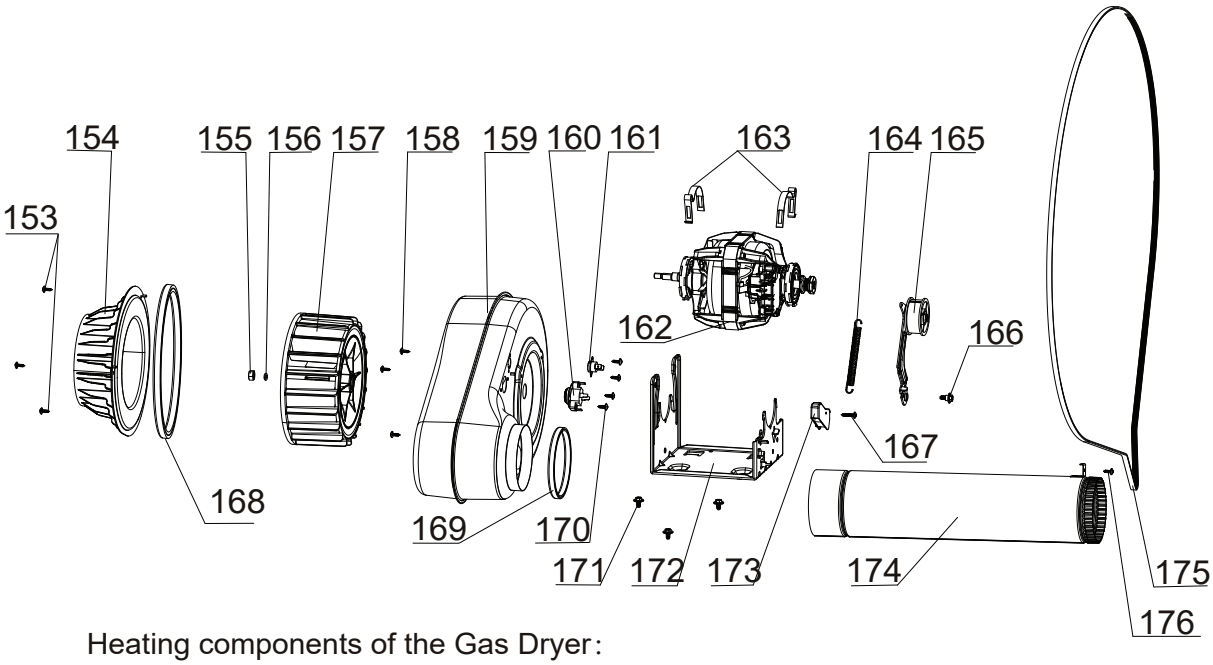

Heating components of the Gas Dryer:

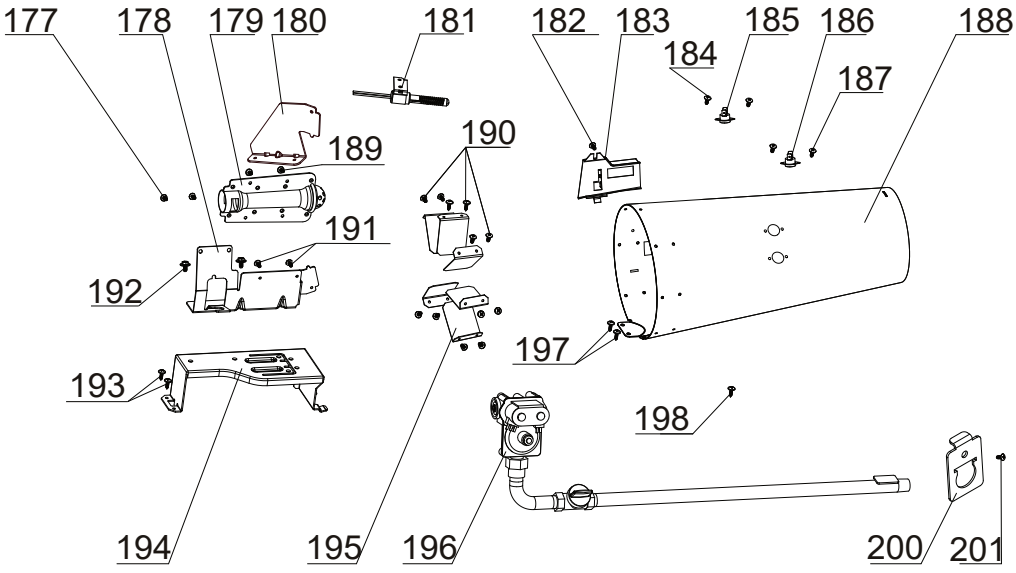

Item #	Qty	Part #	Description	Remarks
126	1	0180100320	DRUM,DRYER	
127	3	0180200314A	LIFTER,DRUM,DRYER	
128	9	00330802017A	SCREW,5*25,DRYER	
129	3	0020600202	SCREW,ST4*12,DRYER	
130	8	00330802500A	SCREW,4*12,DRYER	
131	4	0020600179	SCREW,M4*10,DRYER	
132	1	0180100204A	SUPPORT-PLATE,REAR,DRUM,DRYER	
133	4	0180100202	BRACKET,SUPPORT,BACK PANEL,DRYER	
134	1	0180800692	DUCT,INLET,DRUM,DRYER	
135	1	0024000259AG	SENSOR,INLET,DRYER	
136	2	00216910320111A	SCREW,M3.5*12,DRYER	
137	1	0030508588J	FABRIC,FIRE SAFE,DRYER	
138	2	0030300337	SEAL,DRYER	
139	2	00216910320111A	SCREW,M3.5*12,DRYER	
140	2	0180300049	GASKET,FELT,DRUM,DRYER	
141	2	00216910320111A	SCREW,M3.5*12,DRYER	ELECTRIC DLHE Models
142	2	00216910320111A	SCREW,M3.5*12,DRYER	ELECTRIC DLHE Models
143	1	0180100213	SUPPORT,BASE,ELECTRIC HEATER HOUSING,DRYER	ELECTRIC DLHE Models
144	1	0184000022	HEATER,ELECTRIC,DRYER W/THERMOSTATS DLHE	ELECTRIC DLHE Models
145	1		THERMOSTAT,INLET,ELECTRIC DRYER	Included with #144, ELECTRIC DLHE Models
146	1		FUSE,INLET,ELECTRIC DRYER	Included with #144, ELECTRIC DLHE Models
147	3	00215000000001A	NUT,ROLLER,DRYER	
148	3	00217440540612	GASKET,ROLLER,DRYER	
149	3	0180800201A	ROLLER,DRUM,DRYER	
150	3	0180100267	SHAFT,ROLLER,DRUM,DRYER	
151	6	00215000669600A	GASKET,ROLLER,DRYER	
152	3	0000600001	NUT,ROLLER,DRYER	
153	3	00216910320111A	SCREW,M3.5*12,DRYER	
154	1	0180200318	CONNECTOR,BLOWER HOUSING,DRYER	
155	1	00215000000001A	NUT,IMPELLER HUB,BLOWER HOUSING,DRYER	
156	1	00217440540612	GASKET,IMPELLER HUB,BLOWER HOUSING,DRYER	
157	1	0180200315	IMPELLER,EXHAUST,DRYER	
158	3	00330802071A	SCREW,ST4*10,DRYER	
159	1	0180800689	HOUSING,BLOWER,DRYER	
160	1	00330510014	THERMOSTAT,OUTLET,DRYER	
161	1	0034000077	FUSE,OUTLET,DRYER	
162	1	0184000023	MOTOR,DRYER	
163	2	00330307014	CLAMP,MOTOR,DRYER	
164	1	0180100273	SPRING,IDLER PULLEY,MOTOR,DRUM	
165	1	0180800800	PULLEY,IDLER,MOTOR,DRUM	
166	1	0180600003	SCREW,M5*12,DRYER	
167	1	00330802052	SCREW,ST3*18,DRYER	
168	2	0030300337	SEAL,DRYER	
169	2	0030300337	SEAL,DRYER	
170	4	00330802071A	SCREW,ST4*10,DRYER	
172	1	0180100208	FRAME,BASE,MOTOR.DRYER	
173	1	00330503060C	GUIDE,BELT,DRYER	
174	1	0180800804	DUCT,EXHAUST,DRYER	
175	1	0180300051	BELT,DRYER	
176	1	00216910320111A	SCREW,M3.5*12,DRYER	
177	2	0000600014	SCREW,GROUNDING, M4×9,DRYER	GAS DLHG Models
178	1	0180100216	SUPPORT,BASE,TUBE,IGNITION,GAS DRYER	GAS DLHG Models
179	1	0030100603	TUBE,NOZZLE,IGNITION,GAS DRYER	GAS DLHG Models
180	1	0180100330	SUPPORT,TUBE,NOZZZLE,IGNITION,GAS DRYER	GAS DLHG Models
181	1	0034000094	IGNITER,HOT SURFACE,GAS DRYER	GAS DLHG Models
182	1	00330802071A	SCREW,ST4*10,DRYER	GAS DLHG Models
183	1	0034000103	SENSOR,FLAME,GAS DRYER	GAS DLHG Models
184	2	00330802071A	SCREW,ST4*10,DRYER	GAS DLHG Models
185	1	0024000315	THERMOSTAT,INLET,GAS DRYER DLHG	GAS DLHG Models
186	1	0024000304	FUSE,INLET,GAS DRYER DLHG	GAS DLHG Models
187	2	00330802071A	SCREW,ST4*10,DRYER	GAS DLHG Models
188	1	0180100215	TUBE,BURNER,GAS DRYER	GAS DLHG Models
189	2	00330802004A	SCREW,ST4*10,DRYER	GAS DLHG Models
190	12	00216910320111A	SCREW,M3.5*12,DRYER	GAS DLHG Models
191	2	00330802004A	SCREW,ST4*10,DRYER	GAS DLHG Models
192	2	00330812014A	SCREW, M5*12,DRYER	GAS DLHG Models
193	2	00216910320111A	SCREW,M3.5*12,DRYER	GAS DLHG Models
194	1	0180100213A	SUPPORT,BASE,HOUSING,BURNER,GAS DRYER	GAS DLHG Models
195	6	0180100252	BAFFLE,BURNER HOUSING,GAS DRYER	GAS DLHG Models
196	1	0184000034A	ASSEMBLY,VALVE,GAS	GAS DLHG Models
197	2	00216910320111A	SCREW,M3.5*12,DRYER	GAS DLHG Models
198	1	0020600179	SCREW,M4*10,DRYER	GAS DLHG Models
200	1	0030100579	CLIP,SUPPORT,PIPE,GAS DRYER	GAS DLHG Models
201	1	00216910320111A	SCREW,M3.5*12,DRYER	GAS DLHG Models

Part #	Description	Remarks
080812	KIT,ESD COINBOX	
080814	KIT,GREENWALD COINBOX	
080753	KIT,COIN-DROP MUN UQ V3 WHWF, DLHF MODELS	Standalone configuration
080700	KIT,COIN-DROP MUN UQD DUAL WHWF, DLHF MODELS	Standalone configuration
080754	KIT,COIN-DROP MUNZ CQ V3 WHWF, DLHF MODELS~~	Standalone configuration
080698	KIT,COIN-DROP MUN CQL DUAL WHWF, DLHF MODELS	Standalone configuration
080816	KIT,COIN-DROP MUN UQQ DUAL WASHER-DRYER STACK	Dryer-Over-Washer configuration
080817	KIT,COIN-DROP MUN CQQ DUAL WASHER-DRYER STACK	Dryer-Over-Washer configuration
080818	KIT,COIN-DROP MUN UQQ DUAL DRYER-DRYER STACK	Dryer-Over-Dryer configuration
080819	KIT,COIN-DROP MUN CQ DUAL DRYER-DRYER STACK	Dryer-Over-Dryer configuration
0020809423F	PANEL,DLHS DRYER-OVER-WHLFP WASHER MOUNTING	Additional part required for Dryer-over-Washer mounting
TI1146	INSTRUCTIONS,STACKING DLHS-DLHF-WHLFP	Dryer-Dryer and Dryer-Washer stacking instructions

Laundrylux

Sales and Administration: (516) 371-4400
Spare Parts: (516) 371-2000
Technical Support: (516) 371-0700
461 Doughty Blvd., Inwood, NY 11096

laundrylux.com