# CROSSOVER 2.0 SERIES

*In a class by itself*

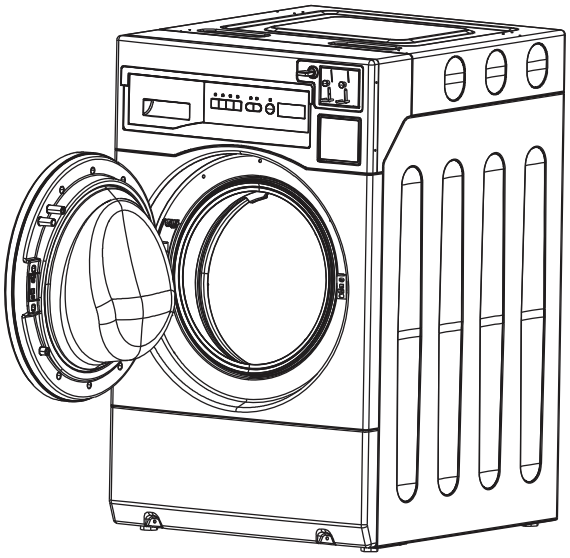

MODEL NO. WHLFP817M

**WASHER SPARE PARTS MANUAL**

DOC. NR. 098032
EDITION 51.2020

Laundrylux

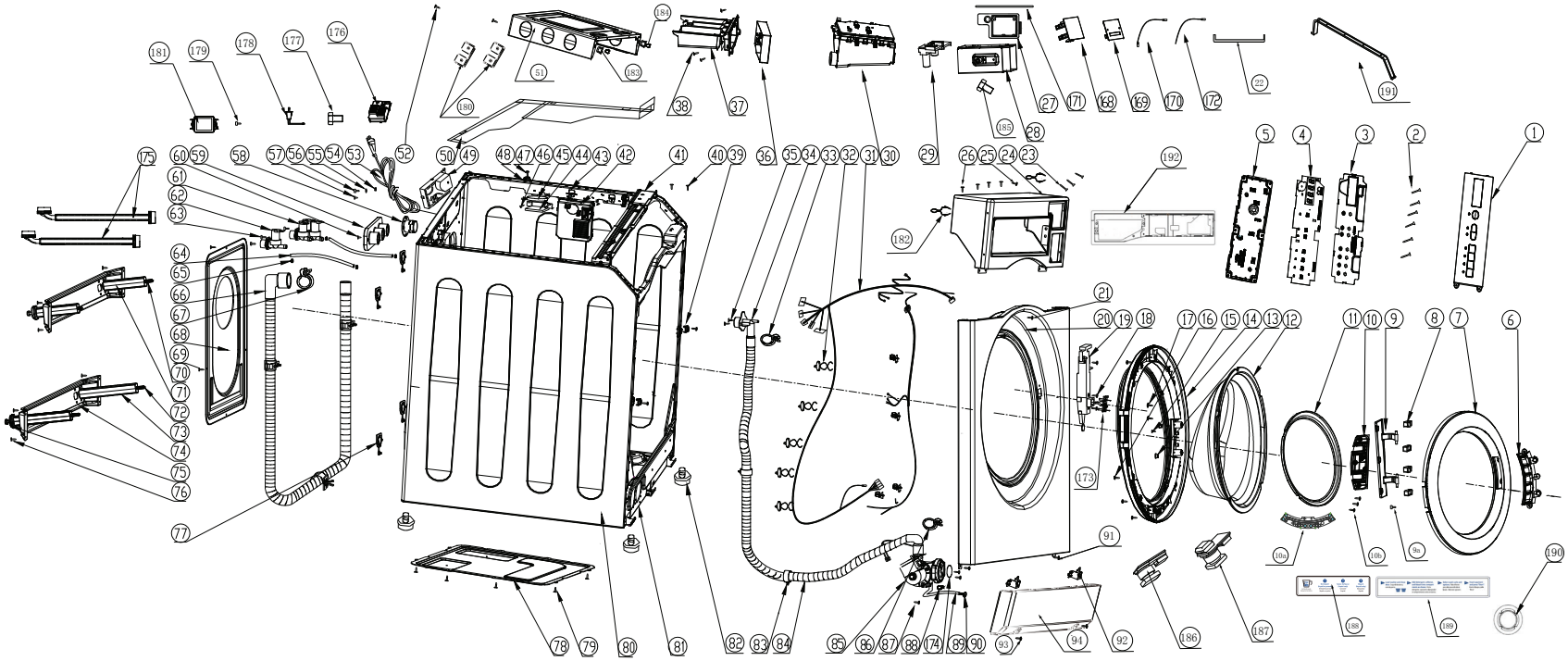

CHASSIS ASSEMBLY

| # | Qty | Part # | Description | Remarks |
|---|---|---|---|---|
| 1 | 1 | 0020808698E | ASSY,FRONT CONTROL PLATE W/LENS & BUTTONS | See Item #189 for label. Crossover 2 only. |
| 2 | 6 | 216910320111A | SCREW,ST3.5X11 | |
| 3 | 1 | 0020203390 | COVER,MAIN BOARD-INNER | |
| 4 | 1 | 0021800078B | CIRCUIT-BOARD, WASHER DISPLAY | |
| 5 | 1 | 0020203389 | COVER, DISPLAY REAR | |
| 6 | 1 | 0020203385B | HANDLE,DOOR | Crossover 2 only. |
| 7 | 1 | 0020204528A | DOOR,OUTER (FRAME) WASHER | Crossover 2 only. |
| 8 | 4 | 0020201212 | BUSHING,DOOR HINGE | |
| 9 | 1 | 0020100656 | HINGE,DOOR | |
| 9a | 4 | 0020600357 | SCREW, DOOR HINGE W/LOCKWASHER | Attaches door hinge (Item #9) to front panel (Item #20) includes lock washer |
| 10 | 1 | 0020203395 | BRACKET,HINGE-INNER | |
| 10a | 1 | 0020100722 | PLATE,HINGE DOOR | Mounts on Inner door (Item #14). |
| 10b | 11 | 216910320111A | SCREW,ST3.5X112 | Attaches Hinge Plate (Item #10a) to Inner Door (Item #14) |
| 11 | 1 | 0020203384B | LENS, DOOR-SMOKED | |
| 12 | 1 | 0021400101 | GLASS,DOOR | |
| 13 | 2 | 0020300740 | PLUG,RUBBER | |
| 14 | 1 | 0020203383A | DOOR,INNER | |
| 15 | 2 | 0020600029 | SCREW, | |
| 16 | 11 | 00330810035 | SCREW,DOOR FRAME | |
| 17 | 2 | 0020600291 | SCREW,DOOR CATCH | |
| 18 | 3 | 0020600029 | SCREW, | |
| 19 | 1 | 0020800826 | DOORLOCK | |
| 20 | 1 | 0020809422F | PANEL,FRONT GREY | Secured by screws (Item #91). Encore only. |
| 21 | 3 | 0020600104 | SCREW,PUMP ACCESS COVER | |
| 22 | 1 | 0020205711A | SEAL,WATER, TOP PANEL | Water barrier for Control Console (Item #24). Encore only. |
| 23 | 3 | 0020600100 | SCREW | |
| 24 | 1 | 0020809617F | PANEL,CONTROL | Supports item #192. Encore only. |
| 25 | 2 | 00216910320111A | SCREW,ST3.5X112 | |
| 26 | 4 | 0020600179 | SCREW, | |
| 27 | 1 | 0020101339 | PANEL,PAYMENT MOUNTING | See Item 27a for lock and key. Encore only. |
| 27a | 1 | '080049 | LOCK,W/KEY-WE16/X-OVER SVC DOOR-RMK | Lock and key for Payment Panel, (Item #27). |
| 28 | 1 | 0020807298D | HOUSING,COIN VAULT | |
| 29 | 1 | 0020203370 | INSERT,SIPHON SOAP BOX | |
| 30 | 1 | 080811 | KIT,HOUSING DISPENSER W/PLUG | Includes softener compartment Plug (item #190). Encore only |
| 31 | 1 | 0020400145K | HARNESS,MAIN | Encore only. |
| 32 | 7 | 00215200015200A | SUPPORT,HARNESS | |
| 33 | 1 | 00218210220611A | CLAMP,DRAIN HOSE | |
| 34 | 1 | 0020203917 | FITTING,DRAIN ELBOW & OUTLET | |
| 35 | 2 | 0020600029 | SCREW, | |
| 36 | 1 | 0020203381A | HANDLE, SOAP BOX, W/O LABEL | See Item #188 for label. Encore only. |
| 37 | 1 | 0020203369 | DRAWER,DISPENSER | |
| 38 | 3 | 0020600029 | SCREW, | |
| 39 | 2 | 0020202844 | CLIP,GUIDE PIN | Encore only. |
| 40 | 4 | 0020600179 | SCREW, | |
| 41 | 1 | 0020101337 | BRACKET,TOP FRONT | Encore only. |
| 42 | 1 | 0024000266A | DELAY-UNIT,DOOR POWER FAILURE | |
| 43 | 2 | 00214800503000 | BUSHING,UPPER SPRING SUPPORT | |
| 44 | 1 | 0020201704 | BRACKET,LEVEL SENSOR MOUNTING | |
| 45 | 1 | 0020400434 | LEVEL-CONTROL | |
| 46 | 2 | 00217030330111A | SCREW,LEVEL SENSOR MOUNT | |
| 47 | 6 | 02-0085104006 | SCREW,TOP PANEL LOCKING CLIP | |
| 48 | 6 | 0020202844 | CLIP,GUIDE PIN | Encore only. |
| 49 | 1 | 0024000271 | INVERTER | |
| 50 | 2 | 0020200546 | COVER,WATER SHIELD | |
| 51a | 1 | 0020809423F | PANEL, DRYER MOUNTING | Adapter plate for mounting dryer. Included with dryer-over-washer models. Encore only |
| 51b | 1 | 0020809423G | PANEL,TOP | Encore only. |
| 52 | 2 | 0020600205 | SCREW,TOP PANEL T15 TORX, SECURITY | |
| 53 | 1 | 0020400196T | HARNESS,MAIN POWER CORD W/PLUG | Encore only. |
| 54 | 2 | 00330804002 | NUT, M5 | |
| 55 | 2 | 00330806003 | WASHER,GROUND TERMINAL | |
| 56 | 2 | 00330804001 | SCREW,GROUNDING | |
| 57 | 1 | 00216910150111A | SCREW,POWER CORD | |
| 58 | 1 | 0020203919 | COVER,VENT | |
| 59 | 1 | 0020203396 | PLATE,LIQUID SUPPLY TUBE ENTRY | |
| 60 | 2 | 00216910150111A | SCREW,POWER CORD | |
| 61 | 1 | 0024000126C | VALVE,INLET COLD | |
| 62 | 1 | 0024000972 | VALVE,INLET HOT | |
| 63 | 4 | 00216920110008A | SCREW | |
| 64 | 3 | 0020300762 | HOSE,PREWASH/SOFTENER | |
| 65 | 8 | 0020600086A | CLAMP,HOSE | |
| 66 | 1 | 0020300148 | HOSE,DRAIN | |
| 67 | 1 | 0020600050A | CLAMP,DRAIN HOSE | |
| 68 | 1 | 0020810817 | PANEL,REAR | |
| 69 | 4 | 00216910320111A | SCREW,ST3.5X112 | |
| 70 | 2 | 0020600288 | BOLT,TRANSPORT UPPER | |
| 71 | 2 | 0020203922 | SLEEVE,TRANSPORT BOLT UPPER | |
| 72 | 2 | 0020600289 | BOLT,TRANSPORT LOWER | |
| 73 | 2 | 0020203923 | SLEEVE,TRANSPORT BOLT LOWER | |
| 74 | 2 | 0020103172 | BRACKET,TRANSPORT | |
| 75 | 4 | 0020103173 | WASHER,TRANSPORT BOLT | |
| 76 | 8 | 0020600179 | SCREW, | |
| 77 | 4 | 0020203924 | COVER,TRANSPORT HOLE | |
| 78 | 1 | 0020103168 | PLATE,BOTTOM | |
| 79 | 8 | 00216910320111A | SCREW,ST3.5X11 | |
| 80 | 1 | 0020103160F | CABINET | Encore unibody chassis not available separately. Shown for reference only. |
| 81 | 2 | 0150600022 | SCREW | |
| 82 | 4 | 0020300170C | FOOT, LEVELING | |
| 83 | 3 | 00215200004402 | CLIP,DRAIN HOSE | |
| 84 | 1 | 0020300377 | HOSE,DRAIN (INNER) | |
| 85 | 1 | 0024000322 | PUMP,120/60 DRAIN | Includes pump filter but not pump feet (Items #186 and 187) |
| 86 | 1 | 00211320024000A | CLAMP,DRAIN HOSE TO PUMP | |
| 87 | 2 | 0020600029 | SCREW, | |
| 88 | 1 | 002-0030100700 | CLAMP,BLEEDER HOSE | |
| 89 | 1 | 0020300727B | HOSE,BLEEDER | |
| 90 | 1 | 0020203918 | PLUG,BLEEDER HOSE | |
| 91 | 2 | 0150600022 | SCREW, | Secures Front Panel (Item #20). |
| 92 | 2 | 0020100964 | BRACKET, TOE PANEL | Encore only. |
| 93 | 2 | 0150600022 | SCREW, HEX HEAD | |
| 94 | 1 | 0020100986E | PANEL,TOE GRAY | Encore only. |
| 168 | 1 | 0020205426A | PLATE,BLOCK COIN-BOX | Encore only. |
| 169 | 1 | 0020205427A | PLATE,CARD READER | Encore only. |
| 170 | 1 | 0020400145D | HARNESS,LIQUID SUPPLY | Harness included with 096445 KIT |
| 171 | 1 | 0020300316C | GASKET, PAYMENT PANEL | Encore only. |
| 172 | 1 | 0020400145C | HARNESS,PRICE REDUCTION | Harness included with 096501 KIT,PRICE RED-MACHINE |
| 173 | 1 | 0020203932 | CATCH,DOOR WASHER | |
| 174 | 1 | 0020300874 | GASKET,PUMP STRAINER | |
| 175 | 2 | 20300110 | HOSE,INLET (SINGLE PC) | HOT/COLD Inlet hose 3/4" GH Female, supply-side -- 20mm BSP Female, machine side (one hose) |
| 176 | 1 | 0020202970 | COVER,DOORLOCK DELAY UNIT | |
| 177 | 3 | 0020600169 | BOLT,COIN VAULT & METER HOUSING | |
| 178 | 1 | 0034000710 | ASSY,S2 SERVICE MODE SWITCH W/BRACKET | |
| 179 | 2 | 0020600104 | SCREW | |
| 180 | 2 | 0020101338 | BRACKET,PANEL-TOP, REAR-SECURING | Secures top panel # 51b to chassis (Item #80). Encore only. |
| 181 | 1 | 0024000973A | FILTER,EMI | |
| 182 | 2 | 00330307012 | CLIP, TOP-COVER, FRONT-SECURING. | Encore only. |
| 183 | 2 | 0020202923 | LATCH | Encore only. |
| 184 | 2 | 0020102858A | PIN, LATCH | Encore only. |
| 185 | 1 | 0033081200 4A | BOLT, M6x20 | Secures top panel # 51b to Control Panel (Item #24). |
| 186 | 1 | 0020300615A | FOOT,PUMP REAR | Used with Pump, Item #85 (qty. 1 required) |
| 187 | 2 | 0020300615B | FOOT,PUMP LEFT-RIGHT | Used with Pump, Item #85 (qty. 2 required) |
| 188 | 1 | 0020508291 | LABEL,DISPENSER HANDLE | Label for Item #36. Encore only. |
| 189 | 1 | 0020508290 | LABEL, CONTROL PANEL | Label for Item #1. Encore only. |
| 190 | 1 | 0020300740 | PLUG, SOFTENER HOUSING DISPENSER | Included with 080811 KIT,HOUSING DISPENSER (Item #30) |
| 191 | 1 | 0020205711A | SEAL,WATER,TOP PANEL | |
| 192 | 1 | 0020205425A | CONSOLE,DISPLAY MOUNTING | Mounts in item #24 |

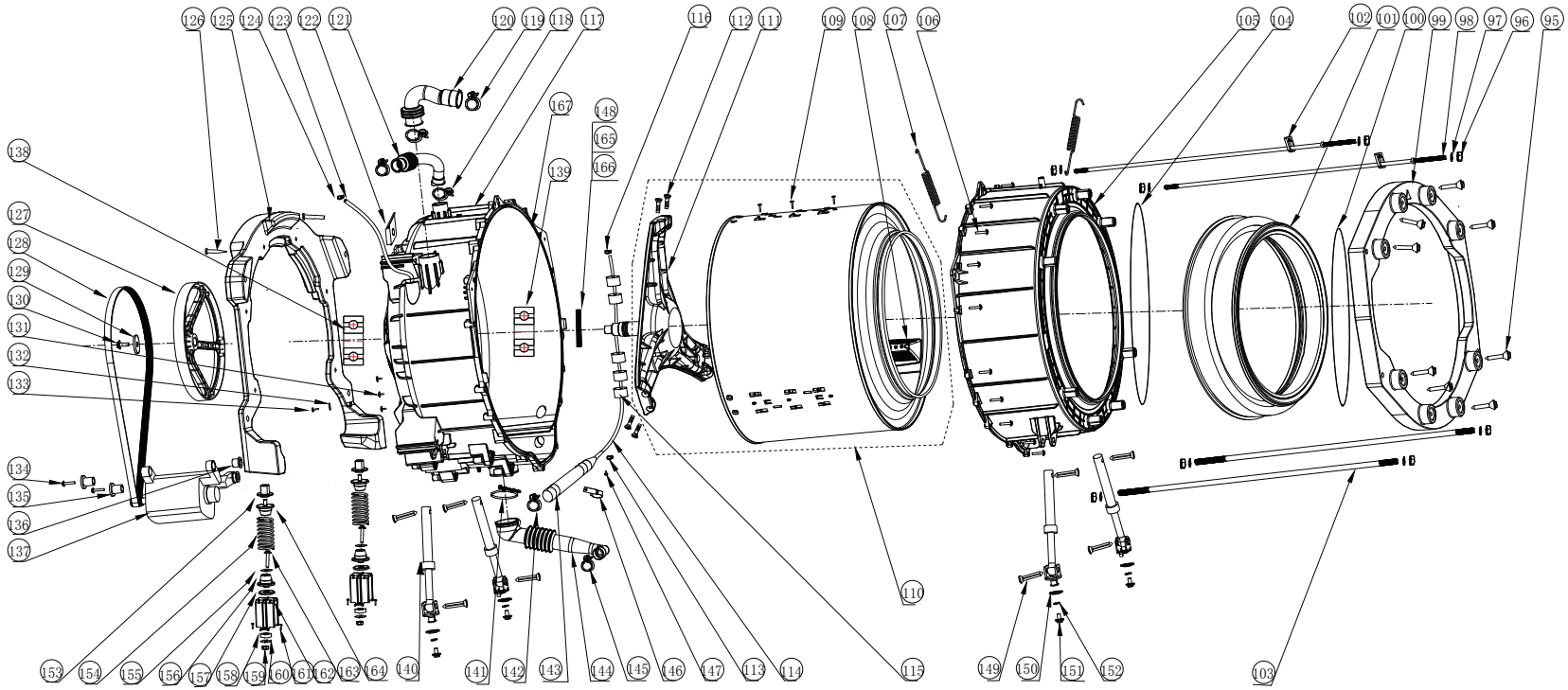


DRUM ASSEMBLY

| # | Qty | Part # | Description | Remarks |
|---|---|---|---|---|
| 95 | 8 | 0020600207 | SCREW,FRONT COUNTERWEIGHT | |
| 96 | 8 | 0020600175 | NUT,M12 | |
| 97 | 8 | 0020600174 | WASHER,M12 LOCK | |
| 98 | 2 | 0020100718 | ROD,DRUM TRANSIT UPPER | |
| 99 | 1 | 0020100707 | COUNTERWEIGHT,FRONT | |
| 100 | 1 | 0020600284 | CLAMP,BELLOWS OUTER | Use tool 096438 BOOT SPRING to install. |
| 101 | 1 | 0020300692BLK | GASKET, DOOR (BELLOWS)-BLACK | |
| 102 | 2 | 0020100717 | CLIP,SPRING SUPPORT | |
| 103 | 2 | 0020100719 | ROD,DRUM TRANSIT LOWER | |
| 104 | 1 | 0020600196 | CLAMP,BELLOWS INNER | |
| 105 | 1 | 0020203916B | DRUM,OUTER FRONT HALF | |
| 106 | 18 | 00330812067 | SCREW,TUB | |
| 107 | 2 | 0020600263B | SPRING,UPPER SUSPENSION | |
| 108 | 3 | 0020203950 | LIFTER,INNER DRUM | |
| 109 | 9 | 0020600164 | SCREW,LIFTER | |
| 110 | 1 | 0020807649 | ASSY, INNER DRUM W SPIDER & SF BUSHING | |
| 111 | 1 | 0020804138B | ASSY,DRUM SUPPORT AND SHFT W/ SF BUSHING | |
| 112 | 6 | 00215000036000 | BOLT,DRUM SHAFT ATTACHMENT | |
| 113 | 1 | 00211320015200A | CLAMP,AIR TRAP LEVEL HOSE | |
| 114 | 1 | 00214401362902A | HOSE,LEVEL SENSOR | |
| 115 | 8 | 00212500011100 | CUSHION,LEVEL HOSE | |
| 116 | 1 | 00218210650611A | CLAMP,LEVEL SENSOR HOSE | |
| 117 | 1 | 0020807310 | DRUM,OUTER REAR HALF (NO BEARINGS OR SEALS) | |
| 118 | 2 | 0020600138 | CLAMP,DRUM FILL HOSE | |
| 119 | 2 | 00218230460611A | CLAMP,DRUM FILL HOSE | |
| 120 | 1 | 0020300730A | HOSE,DRUM FILL | |
| 121 | 1 | 0020300731 | HOSE,DRUM VENT | |
| 122 | 6 | 0020100071 | PLATE,REAR WEIGHT ATTACHMNT | |
| 123 | 1 | 0020300732 | HOSE,ANTI-SIPHON | |
| 124 | 2 | 00211320015200A | CLAMP,AIR TRAP LEVEL HOSE | |
| 125 | 1 | 0020100708 | COUNTERWEIGHT,REAR | |
| 126 | 6 | 00330812013A | BOLT,REAR WEIGHT FASTENING | |
| 127 | 1 | 0020100657 | PULLEY,DRUM | |
| 128 | 1 | 0020300174 | BELT,WASHER | |
| 129 | 1 | 0020600287 | WASHER,PULLEY | |
| 130 | 1 | 0020600286 | BOLT,PULLEY | |
| 131 | 3 | 0020600155 | SCREW,GROUNDING | |
| 132 | 1 | 00217470300611A | TERMINAL,GROUNDING | |
| 133 | 1 | 0020600179 | SCREW, | |
| 134 | 2 | 00215100001000 | SCREW,MOTOR MOUNTING | |
| 135 | 2 | 0020202717 | SPACER,MOTOR | |
| 136 | 2 | 0020300466 | BUSHING,MOTOR MOUNT | |
| 137 | 1 | 0024000974 | MOTOR,120/60 | |
| 138 | 1 | | BEARING,FRONT | Included with 096616 or 096725 kits. |
| 139 | 1 | | BEARING,REAR | Included with 096616 or 096725 kits. |
| 140 | 4 | 0020804252A | SHOCK-ABSORBER | |
| 141 | 1 | 00297023000100A | CLAMP,DRUM TO PUMP HOSE (DRUM) | |
| 142 | 1 | 00211320011300A | CLAMP,AIR TRAP | |
| 143 | 1 | 00217400046900 | CHAMBER,AIR | |
| 144 | 1 | 0020300726 | HOSE,DRUM TO PUMP | |
| 145 | 1 | 00215200294400A | CLAMP,DRUM TO PUMP (PUMP) | |
| 146 | 1 | 00215200032905 | CLIP,AIR TRAP | |
| 147 | 1 | 00216910150111A | SCREW,POWER CORD | |
| 148 | 1 | | SEAL,LARGE | Included with 096616 or 096725 kits. |
| 149 | 8 | 0020202225 | PIN,SHOCK MOUNTING | |
| 150 | 4 | 00215000035200 | WASHER,SHOCK SUPPORT | |
| 151 | 4 | 00217440540612 | LOCKWASHER,SHOCK SUPPORT | |
| 152 | 4 | 00215000002804A | BOLT,SHOCK SUPPORT | |
| 153 | 2 | 0020300758 | BUSHING,SPRING TOWER UPPER | |
| 154 | 2 | 0020600233 | SPRING,SUSPENSION-LOWER REAR | |
| 155 | 2 | 00215000014200A | WASHER,M8 | |
| 156 | 2 | 0020203359 | BUSHING,SPRING LEADER LOWER | |
| 157 | 2 | 0020300756 | GASKET,SPRING TOWER UPPER | |
| 158 | 2 | 0020300757 | GASKET,SPRING TOWER LOWER | |
| 159 | 2 | 00215000000001A | NUT,M8 | |
| 160 | 2 | 00215000014200A | WASHER,M8 | |
| 161 | 6 | 00215000002804A | BOLT,SHOCK SUPPORT | |
| 162 | 2 | 0020100743 | BRACKET,SPRING SUPPORT | |
| 163 | 2 | 0020100269A | BOLT,SPRING BUSHING | |
| 164 | 2 | 0020203358 | BUSHING,SPRING LEADER UPPER | |
| 165 | 1 | | SEAL,KEYED MIDDLE | Included with 096616 or 096725 kits. |
| 166 | 1 | | SEAL,SMALL | Included with 096616 or 096725 kits. |
| 167 | 1 | 0020300723 | GASKET,OUTER DRUM | Also included with 096616 or 096725 kits. |

| Part # | Description | Remarks |
|---|---|---|
| 080812 | KIT,ESD COINBOX | COINBOX, ESD 8" deep w/cap. Encore only. |
| 080814 | KIT,GREENWALD COINBOX | COINBOX,GREENWALD 8" deep w/cap Encore only |
| 080905 | KIT,COIN-DROP,MUNZ UQ | U.S. Encore only. |
| 080906 | KIT,COIN-DROP,MUNZ UQD DUAL | U.S. Encore only. |
| 080907 | KIT,COIN-DROP,MUNZ CQ | Canadian. Encore only. |
| 080908 | KIT,COIN-DROP,MUNZ CQL DUAL | Canadian. Encore only. |
| 471209485 | ADAPTER,20 BSPF TO 3/4 GHTM | |
| 096438 | TOOL,BOOT SPRING | Tool to install Outer Bellows clamp (Item #100). |
| 0020100654 | TOOL,FOOT LOCKNUT | Included in drum kit. |
| 096501 | KIT,PRICE RED-MACHINE | 1 kit required per machine. Not required if using buit-in Real Time Clock. |
| 096496 | KIT,PRICE RED-LOCATION | Includes clock to control relays, 1 kit required per location. Not required if using buit-in Real Time Clock. |
| 096445 | KIT,LIQUID SUPPLY | External liquid supply kit. |
| 096725 | KIT,BEARING REPLACEMENT WITH SHAFT SPIDER | Bearing kit with shaft and Seal Face Bushing. |
| 096616 | KIT,SEAL REPLACEMENT | Bearing kit without shaft and Seal Face Bushing. |
| 098019 | TOOLS,BEARING REPLACEMENT | Tools for bearing replacement. |
| 098019W | KIT,TOOLS BEARING REPLACEMENT | Rental Kit |
| 0020507838 | LABEL,LEAVE DOOR OPEN WHEN NOT IN USE | Mounts on top of Outer Door (Item #7) |
| 0020504605 | LABEL,ELECTRICAL SHOCK HAZARD, DOOR | |
| 0020504609 | LABEL,FIRE HAZARD,DOOR | |
| 0020506863 | LABEL,HAND CRUSH WARNING, DOOR, TRIANGULAR | |
| 0020504600 | LABEL,POWER CABLE SHOCK HAZARD, REAR | |
| 0020506864 | LABEL,REMOVE SHIPPING SECURITIES WARNING,WASHER, REAR | |
| 0020506865 | LABEL,SHOCK HAZARD, WASHER, REAR | |
| 096444 | INSTRUCTIONS, LIQ SUPP INS | TI-1127, External Liquid Supply instructions included in kit #096445. |
| TI-1129 | INSTRUCTIONS, PRICE RED | TI-1129, Price Reduction Instructions included in kit #096501. |
| 098018 | WIRING DIAGRAM | |

THIS PAGE
INTENTIONALLY BLANK

# Laundrylux

Sales and Administration: (516) 371-4400
Spare Parts: (516) 371-2000
Technical Support: (516) 371-0700
461 Doughty Blvd., Inwood, NY 11096

**laundrylux.com**