Spareparts Catalogue
Catalogue de pièces

D767

Electrolux PROFESSIONAL

Doc.no
Version 13.2020

D767

Illustration	Page	Table of content
500653	6	Lining and top panel
500143	8	Drum
500144	10	Drum with moisture sensor
500592	12	Motor
500167	16	Control panel
500159	18	CPU
500534	20	Cables CPU
500160	22	Program selector
500689	24	Door and front
500142	26	Filter hatch
500168	28	Electric components connection
500535	34	Cables I/O module type 82
500693	36	Assy, heater-gas
500162	38	Heating unit, steam
500147	40	Assy, heater-el
500400	42	Contactor unit 200-240V 3AC
500402	44	Contactor unit 380-480V 3AC
500403	46	Contactor unit 220-240V 1AC
500166	48	Capasitor unit
500694	50	Fan unit
500698	52	Coinbox housing (for coinbox height 60mm)
500699	54	Coinbox housing (for coinbox height 70mm)
500172	56	Coin meter USA
500209	58	Stop button
500218	60	Key switch

D767

Table of content	Table des matières	Page/Page
Lining and top panel	Panneau frontal avec pupitre de commande	6
Drum	Tambour	8
Drum with moisture sensor	Tambor avec capteur humidité	10
Motor	Moteur	12
Control panel	Pupitre de commande	16
CPU	CPU	18
Cables CPU	Câble CPU	20
Program selector	Commutateur rotatif	22
Door and front	Plaque et devant	24
Filter hatch	Volet du filtre	26
Electric components connection	Composants électriques raccordement électrique	28
Cables I/O module type 82	Câbles module I/O type 82	34
Assy, heater-gas	Élément chauffant, gaz	36
Heating unit, steam	Unité chauffage, vapeur	38
Assy, heater-el	Élément chauffant, el	40
Contactor unit 200-240V 3AC	Contacteur 200-240V 3AC	42
Contactor unit 380-480V 3AC	Contacteur 380-480V 3AC	44
Contactor unit 220-240V 1AC	Contacteur 220-240V 1AC	46
Capasitor unit	Unité condensateur	48
Fan unit	Dispositif de ventilation	50
Coinbox housing (for coinbox height 60mm)	Logement de monnayeur (hauteur de monnayeur 60 mm)	52
Coinbox housing (for coinbox height 70mm)	Logement de monnayeur (hauteur de monnayeur 70 mm)	54
Coin meter USA	Monnayeur USA	56
Stop button	Bouton d'arrêt	58
Key switch	Commutateur à touche	60

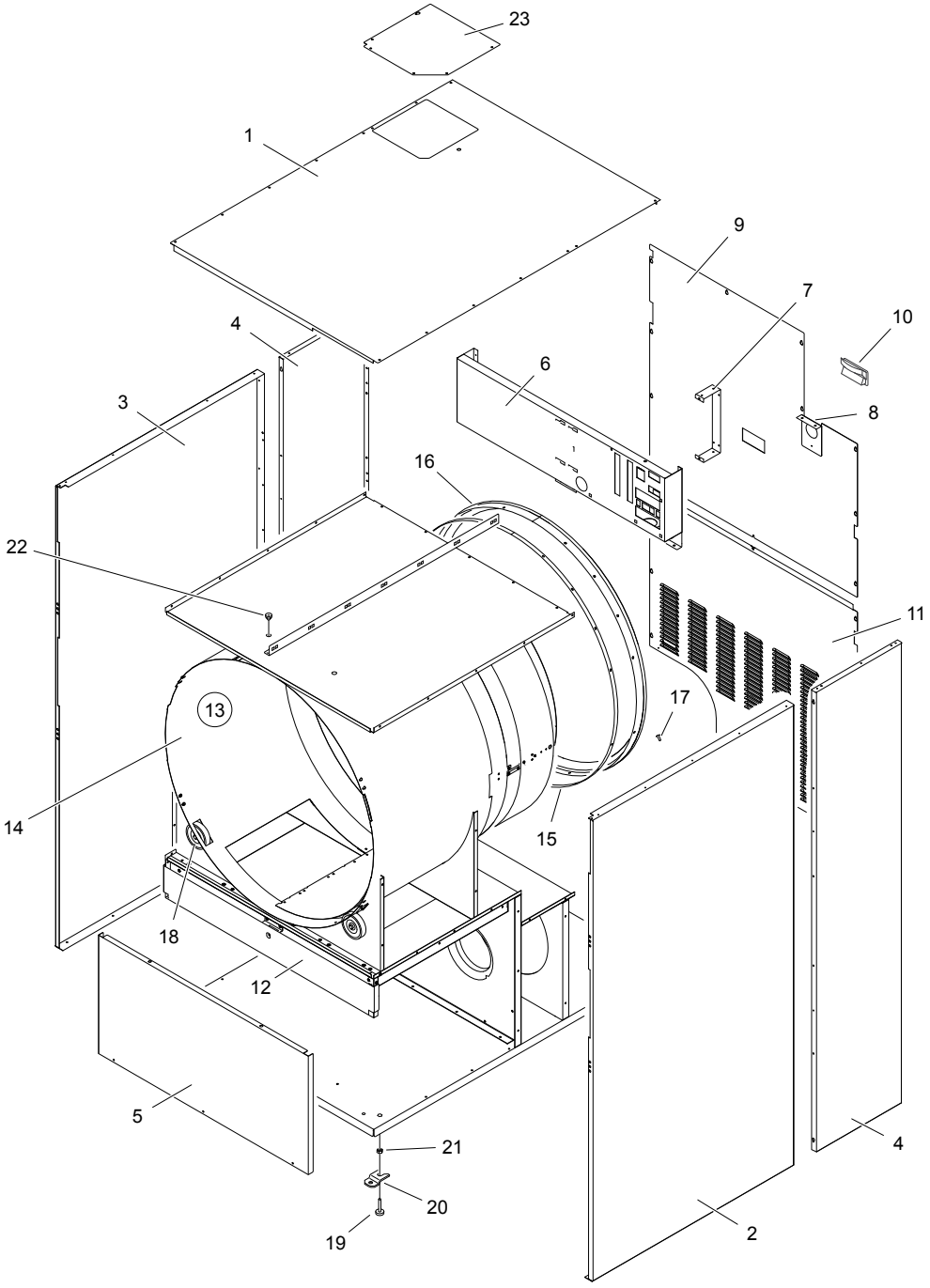

500653_01

D767
Lining and top panel
Panneau frontal avec pupitre de commande

Illustration	Issue	Month	
Illustration	Question	Mois	
500653/1	**1**	**2**	**2018**

Pos	Qty	Part.no	Description	Description	Notes
1	1	490351301	Top panel	Couvercle	
2	1	490350421	Side panel	Panneau latéral	Right Grey
2	1	490350411	Side panel	Panneau latéral	Right Stainless
3	1	490350521	Side panel	Panneau latéral	Left Grey
3	1	490350511	Side panel	Panneau latéral	Left Stainless
4	2	490350221	Side panel	Panneau latéral	Grey
5	1	490363512	Front panel	Panneau avant	Shiny stainless steel
5	1	490363531	Front panel	Panneau avant	White
6	1		Component panel	Panneau composants	
7	1	490360121	Bracket	Support de montage	
8	1	490360602	Bracket	Support de montage	El.* Ø51
8	1	490360603	Bracket	Support de montage	El.* Ø64
8	1	490360601	Bracket	Support de montage	Gas Ø32
9	1	490359701	Rear panel	Panneau arrière	El. + Gas* Upper
9	1	490378301	Rear panel	Panneau arrière	Steam* Upper
10	1	487192005	Handle	Manivelle	
11	1	490359801	Rear panel	Panneau arrière	El. + Gas* Lower
11	1	490378201	Rear panel	Panneau arrière	Steam* Lower
12	1		Filter hatch complete	Plaque filtre complète	See illustration: 500142
13	1	490508201	Drum housing	Carter de tambour	Kit
14	1	490506001	• *Drum housing*	• *Carter de tambour*	
15	1	490506701	• *Bracket for felt sealing*	• *Support de joint d'étanchéité en feutre*	
16	1	490503801	• *Felt seal*	• *Joint feutre*	
17	18	488037914	• *Screw*	• *Vis*	4,2X13
18	2	487137607	Support roller	Galet de soutien	Complete
19	4	438816002	Foot	Pied	M10
20	1	487193544	Clip	Fixation	Kit
21	4	731232001	Nut	Écrou	M10
22	1	487230758	Pressure meter	Bouchon en caoutchouc	
23	1	490460701	Cover plate	Plaque recouvrement	

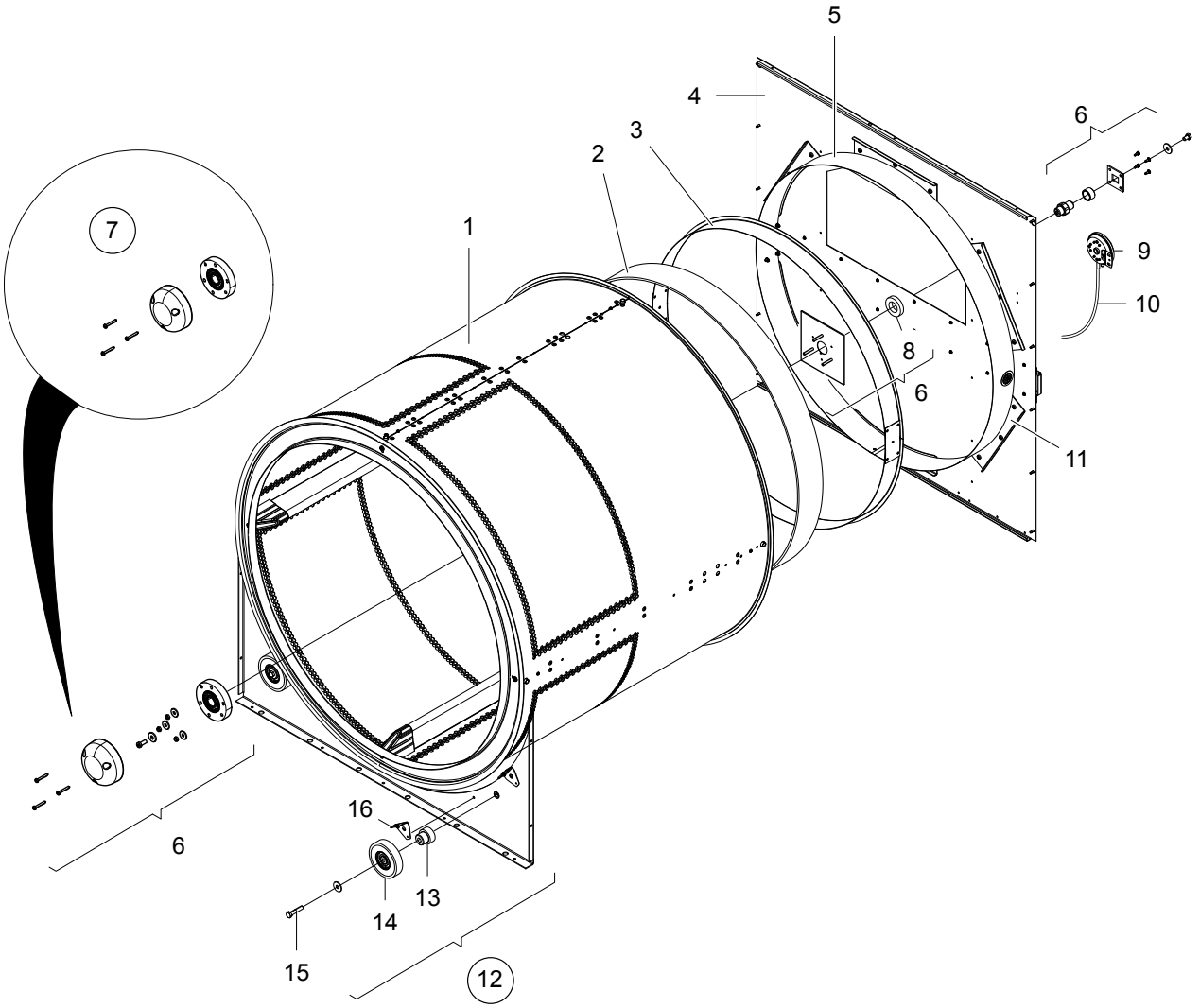

500143_06

D767
Drum
Tambour

Illustration Illustration	Issue Question	Month Mois	
500143/6	**2**	**2**	**2020**

Pos	Qty	Part.no	Description	Description	Notes
1	1	490387901	Drum	Tambour	USA Galvanized
1	1	490387902	Drum	Tambour	USA Stainless
2	1	490354901	Felt seal	Joint feutre	
3	2	490354801	Sealing plate	Plaque d'étanchéité	
4	1	490354601	Rear panel	Plaque arrière	
5	1	490379301	Sealing plate	Plaque d'étanchéité	
6	1	487197452	Bearing housing with bearings	Logement de palier avec palier	Kit
7	1	472997603	Bearing with cover	Roulement et couvercle	Kit
8	1	487192070	Felt seal	Joint feutre	
9	1	471886501	Vacuum switch	Commutateur de vide	EL* 90 Pa
9	1	471886502	Vacuum switch	Commutateur de vide	GAS* 120 Pa
10	1	877525102	Hose	Flexible	Per 1m
11	6	490381901	Bracket	Support de montage	
12	1	490501708	Front support plate	Plaque de support avant	Complete
13	2	490503401	• *Shaft*	• *Arbre*	
14	2	487137607	• *Support roller*	• *Galet de soutien*	Complete
15	2	488014040	• *Screw*	• *Vis*	
16	6	490351901	• *Bracket*	• *Support de montage*	

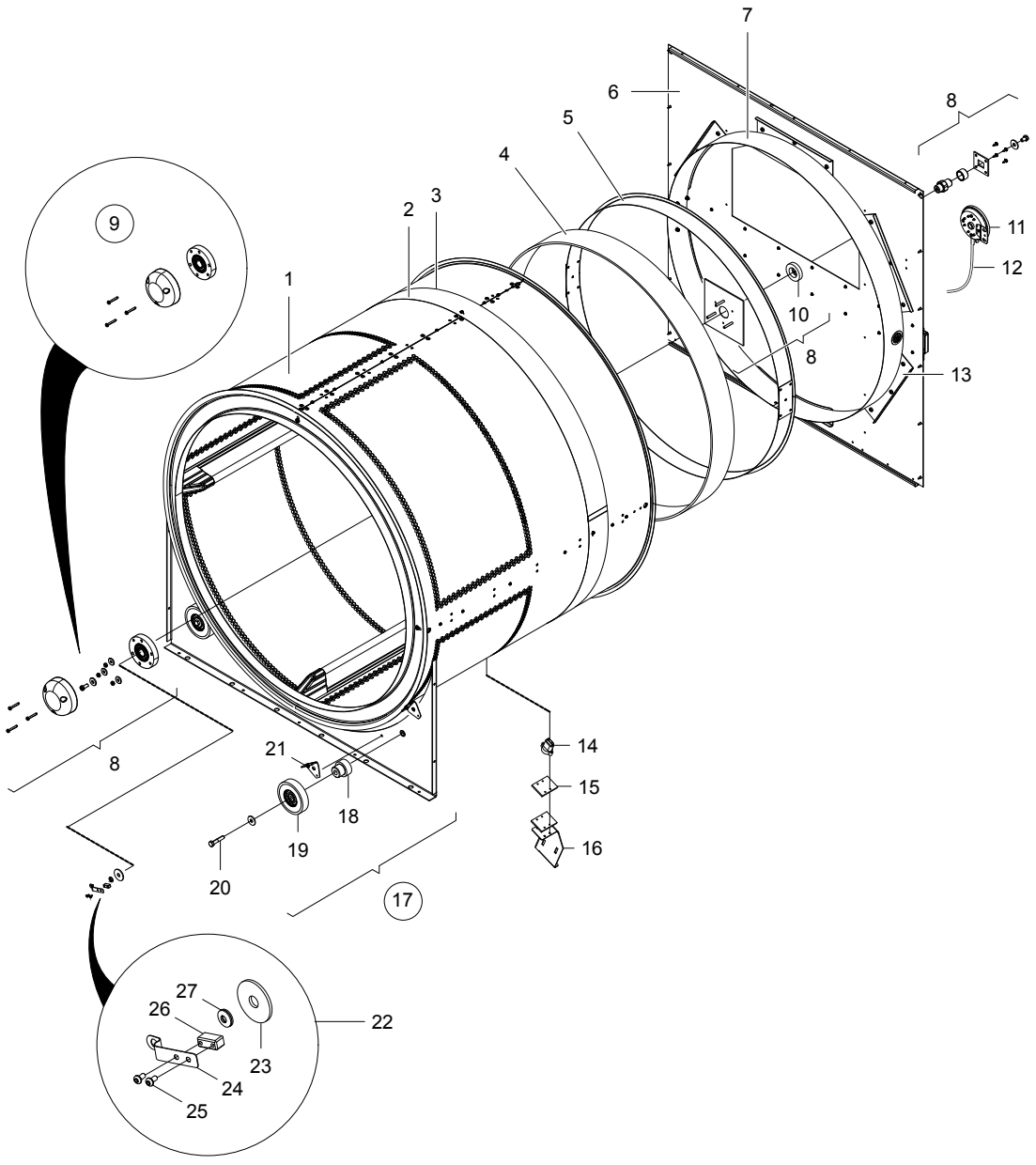

500144_08

D767
Drum with moisture sensor
Tambor avec capteur humidité

Illustration	Issue	Month	
Illustration	Question	Mois	
500144/8	**3**	**2**	**2020**

Pos	Qty	Part.no	Description	Description	Notes
1	1	490387903	Drum	Tambour	USA Galvanized
1	1	490387904	Drum	Tambour	USA Stainless
2	1	490357001	• *Ring*	• *Anneau*	RMC
3	1	490356901	• *Insulation*	• *Isolation*	
4	1	490354901	Felt seal	Joint feutre	
5	2	490354801	Sealing plate	Plaque d'étanchéité	
6	1	490354601	Rear panel	Plaque arrière	
7	1	490379301	Sealing plate	Plaque d'étanchéité	
8	1	487197452	Bearing housing with bearings	Logement de palier avec palier	Kit
9	1	472997603	Bearing with cover	Roulement et couvercle	Kit
10	1	487192070	Felt seal	Joint feutre	
11	1	471886501	Vacuum switch	Commutateur de vide	EL* 90 Pa
11	1	471886502	Vacuum switch	Commutateur de vide	GAS* 120 Pa
12	1	877525102	Hose	Flexible	Per 1m
13	6	490381901	Bracket	Support de montage	
14	1	490381801	Brush	Piston	
15	1	490369901	Rubber damper	Papillon en caoutchouc	
16	1	490365001	Bracket	Support de montage	
17	1	490501708	Front support plate	Plaque de support avant	Complete
18	2	490503401	• *Shaft*	• *Arbre*	
19	2	487137607	• *Support roller*	• *Galet de soutien*	Complete
20	2	488014040	• *Screw*	• *Vis*	
21	6	490351901	• *Bracket*	• *Support de montage*	
22	1	490427101	RMC	RMC	Complete
23	1	471850242	• *Washer*	• *Rondelle*	
24	1	490373001	• *Spring*	• *Ressort*	
25	2	471834101	• *Screw*	• *Vis*	M3X6
26	1	490373101	• *Brush*	• *Piston*	
27	2	487231968	• *Washer*	• *Rondelle*	

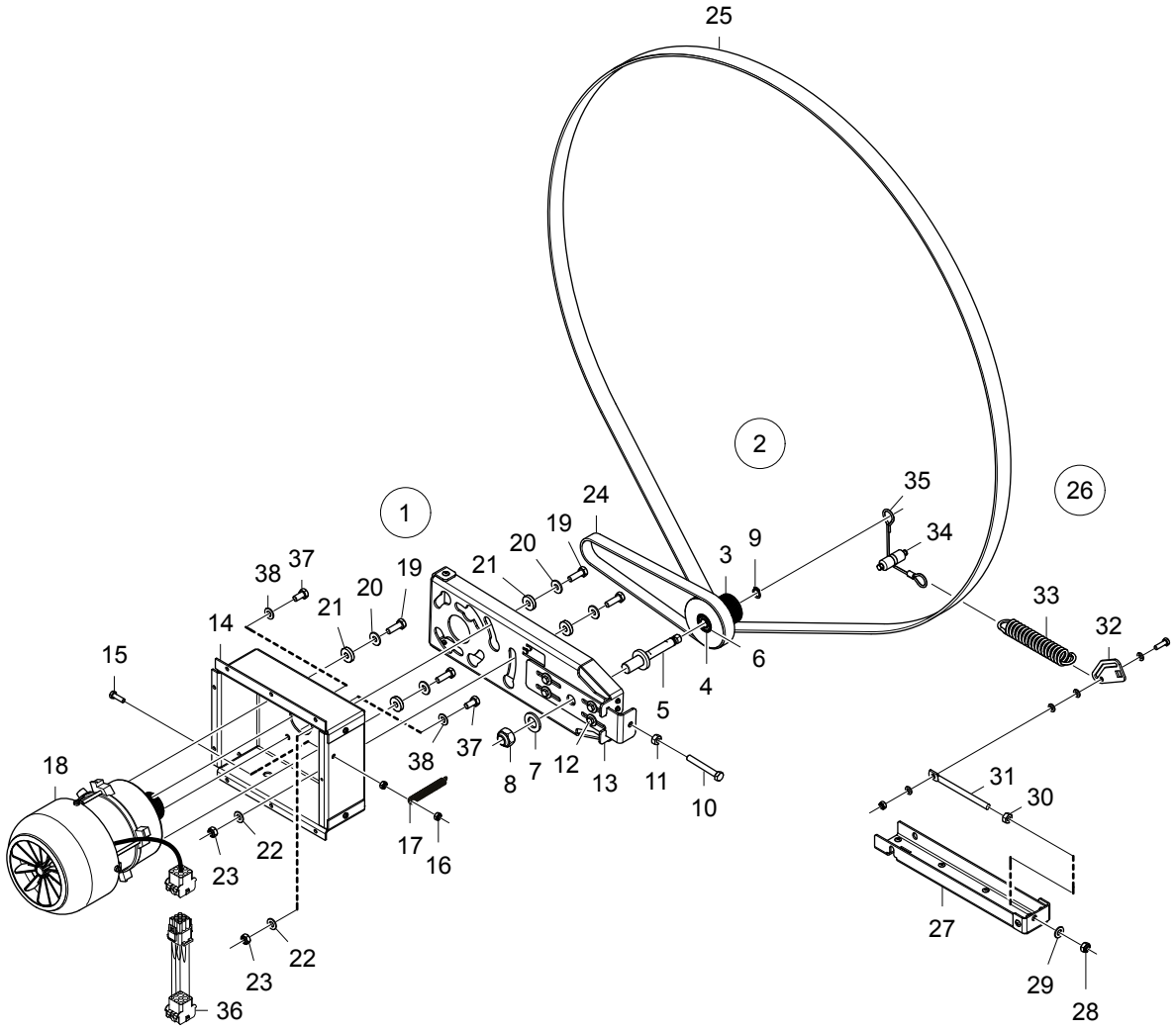
25
2
26
1
35
34
24
19
20
21
3
9
38
37
19
20
21
14
33
32
15
6
4
5
18
38
37
8
7
12
13
11
10
31
30
17
16
22
23
27
22
23
29
28
36

500592_02

D767
Motor
Moteur

Illustration	Issue	Month	
Illustration	Question	Mois	
500592/2	**2**	**3**	**2020**

Pos	Qty	Part.no	Description	Description	Notes
1	1	490384602	Belt tensioner	Tendeur de courroie	50Hz Complete
1	1	490384601	Belt tensioner	Tendeur de courroie	60Hz Complete
2	1	472993905	• *Pulley*	• *Poulie*	50Hz Complete
2	1	472993906	• *Pulley*	• *Poulie*	60Hz Complete
3	1	490384001	•• *Pulley*	•• *Poulie*	50Hz
3	1	490383901	•• *Pulley*	•• *Poulie*	60Hz
4	2	490374301	•• *Ball bearing*	•• *Roulement à billes*	
5	1	490500805	•• *Shaft*	•• *Arbre*	
6	1	735311400	•• *Clip, C-type*	•• *Attache en forme C*	D12
7	1	734118601	•• *Washer*	•• *Rondelle*	BRB 17X30
8	1	732212401	•• *Locking nut*	•• *Contre-écrou*	M16
9	1	487010518	•• *Washer*	•• *Rondelle*	
10	1	725246371	• *Screw*	• *Vis*	M6S 8X60
11	1	731231801	• *Nut*	• *Écrou*	M8
12	4	725236651	• *Screw*	• *Vis*	M6X12
13	4	734115341	• *Washer*	• *Rondelle*	6,4X18
14	1	490500281	Motor bracket	Support du moteur	
15	1	725237051	Screw	Vis	M6X20
16	2	732211601	Locking nut	Contre-écrou	M6
17	1	490382501	Spring	Ressort	
18	1	487028340	Motor	Moteur	120V 60Hz 1AC
18	1	487028342	Motor	Moteur	220-240V 50/60Hz 1AC
18	1	487028346	Motor	Moteur	200-480V 50/60Hz 3AC
19	2	725245351	Screw	Vis	M8X25
20	2	471850214	Washer	Rondelle	8.4X20X2
21	2	490500802	Guide bushing	Douille de contrôle	
22	2	734116401	Washer	Rondelle	8,4X17
23	2	732211801	Locking nut	Contre-écrou	M8
24	1	490364703	Drive belt	Courroie	
25	1	490364701	Drive belt	Courroie	5,3X15

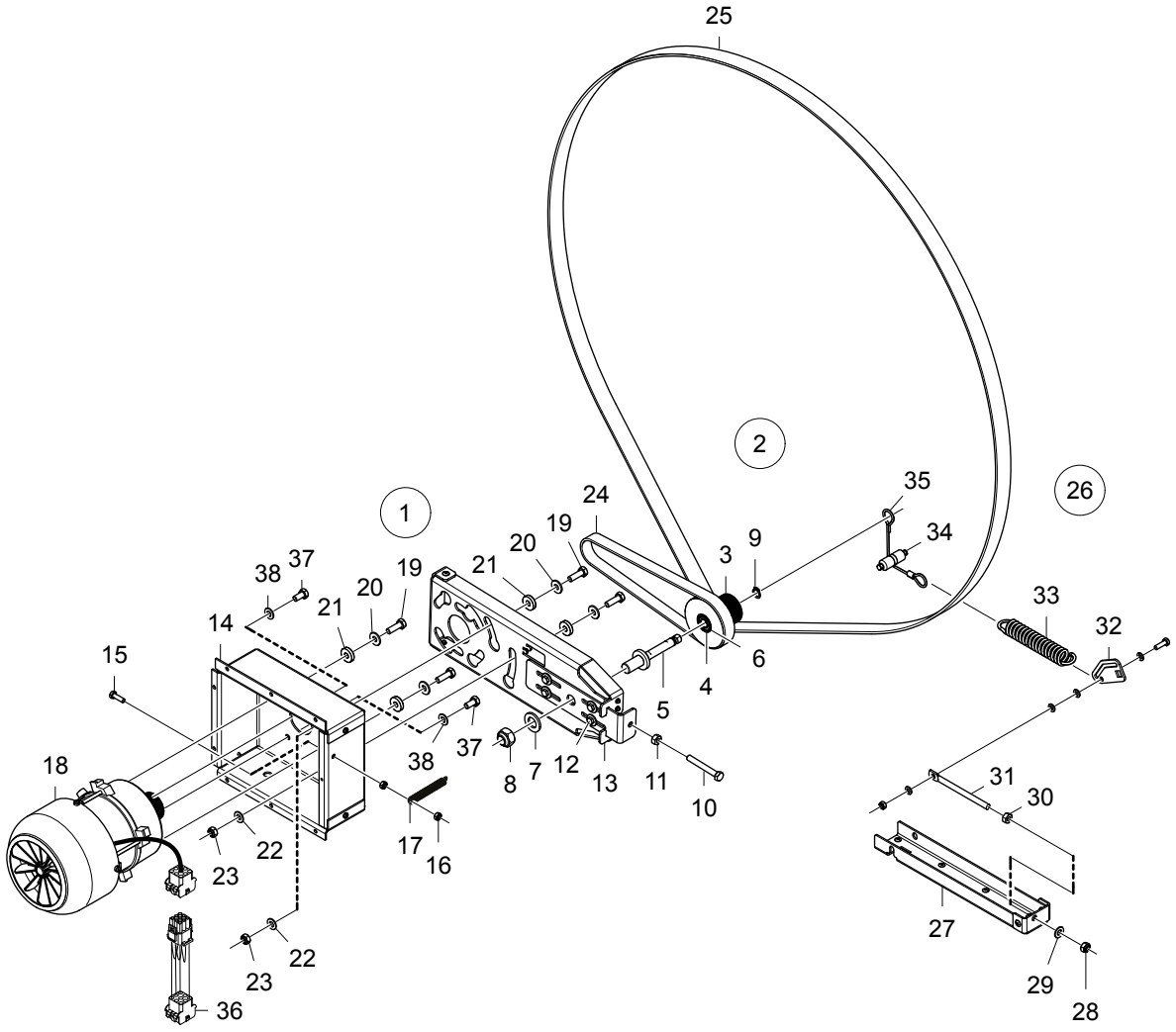
25
2
26
1
35
34
24
19
20
21
3
9
38
37
19
20
21
14
33
32
15
6
4
5
18
38
37
8
7
12
13
11
10
31
30
17
16
22
23
27
22
23
29
28
36

500592_02

D767
Motor
Moteur

Illustration	Issue	Month	
Illustration	Question	Mois	
500592/2	**2**	**3**	**2020**

Pos	Qty	Part.no	Description	Description	Notes
26	1	490378101	Tensioner plate	Plaque d'extenseur	Complete
27	1	490500804	• *Bracket*	• *Support de montage*	
28	1	732211801	• *Locking nut*	• *Contre-écrou*	M8
29	1	734116401	• *Washer*	• *Rondelle*	8,4X17
30	1	731231801	• *Nut*	• *Écrou*	M8
31	1	489011513	• *Set screw*	• *Vis de réglage*	M8X120
32	1	490376801	• *Tensioner plate*	• *Plaque d'extenseur*	
33	1	490377501	• *Spring*	• *Ressort*	
34	1	490500207	• *Roller*	• *Galet*	
35	1	490377401	Wire	Fil	
36	1	490350101	Cable set	Jeu de câbles	200-240V 3AC
37	1	725244951	Screw	Vis	M8X16
38	1	734116401	Washer	Rondelle	8,4X17

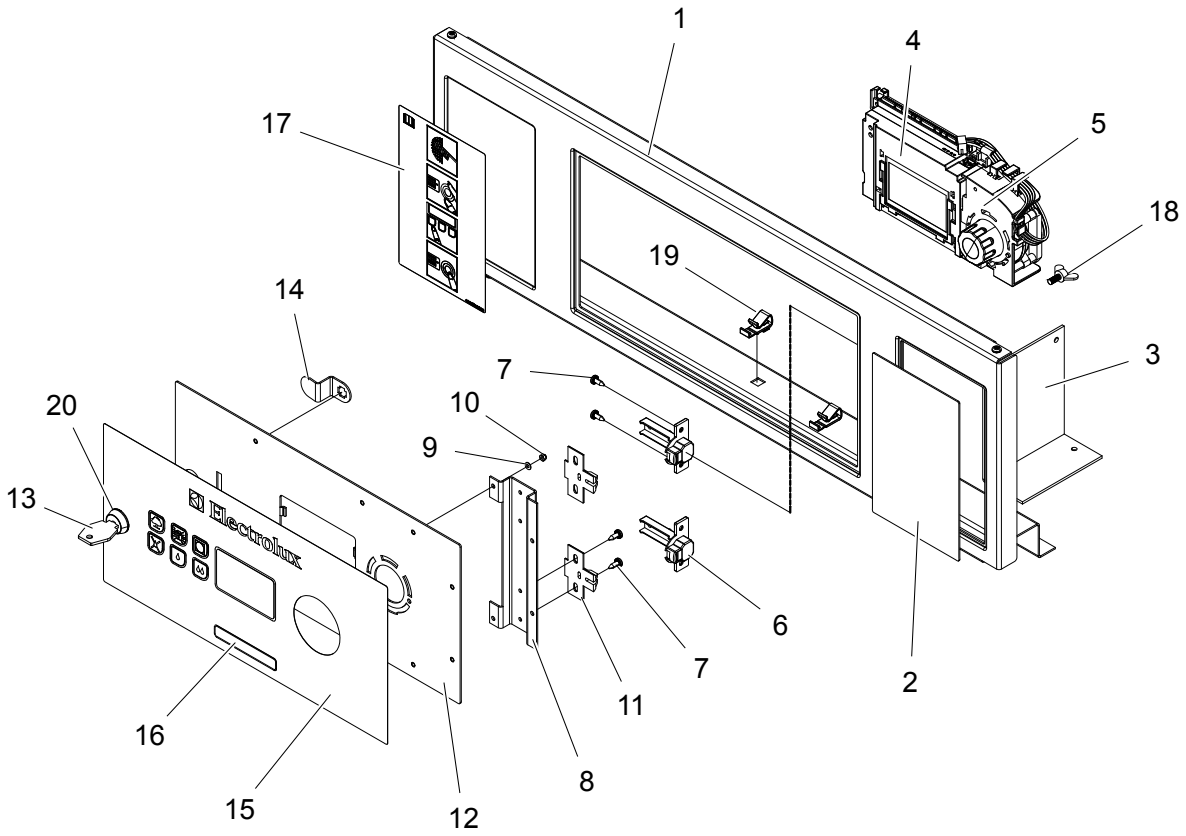

500167_02

D767
Control panel
Pupitre de commande

Illustration	Issue	Month	
Illustration	Question	Mois	
500167/2	**2**	**8**	**2019**

Pos	Qty	Part.no	Description	Description	Notes
1	1	490353422	Front panel	Panneau avant	Silver grey
2	1	432215041	Cover plate	Plaque recouvrement	Silver grey
3	1	490363201	Plate	Plaque	Coin
4	1	*	CPU	CPU	Without software. Software available on website. See illustration: 500159
5	1	*	Program selector	Commutateur rotatif	See illustration: 500160
6	2	487090901	Hinge	Charnière	
7	8	471836901	Screw	Vis	
8	1	490362901	Hinge plate	Paumelle	See illustration: 500159
9	6	734112401	Washer	Rondelle	BRB 3X7 See illustration: 500160
10	6	732211001	Locking nut	Contre-écrou	M3
11	2	487090801	Mounting plate	Plaque de montage	
12	1	490362623	Plate	Plaque	OPL/AHL Silver grey
12	1	490362624	Plate	Plaque	Coin Silver grey
13	1	487170714	Lock	Serrure	
14	1	490363001	Lock catch	Ergot de verrouillage	
15	1	490370510	Panel sign	Voyant du tableau	OPL/Coin
16	1	490375356	Type plate	Numéro série plaque	D767
17	1	490370622	Instruction plate	Plaque instruction utilisation	Blank
18	1	471837401	Screw	Vis	Coin M5X16
19	3	432632001	Clamp	Attache	
20	1	487187500	Lock washer	Rondelle d'arrêt	

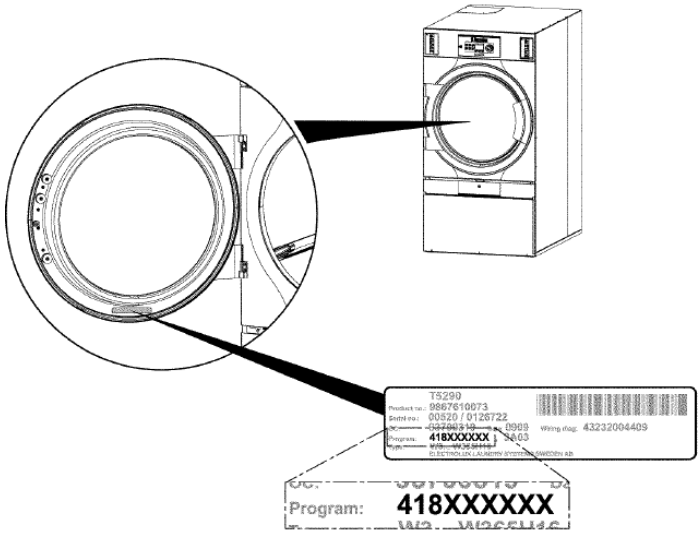

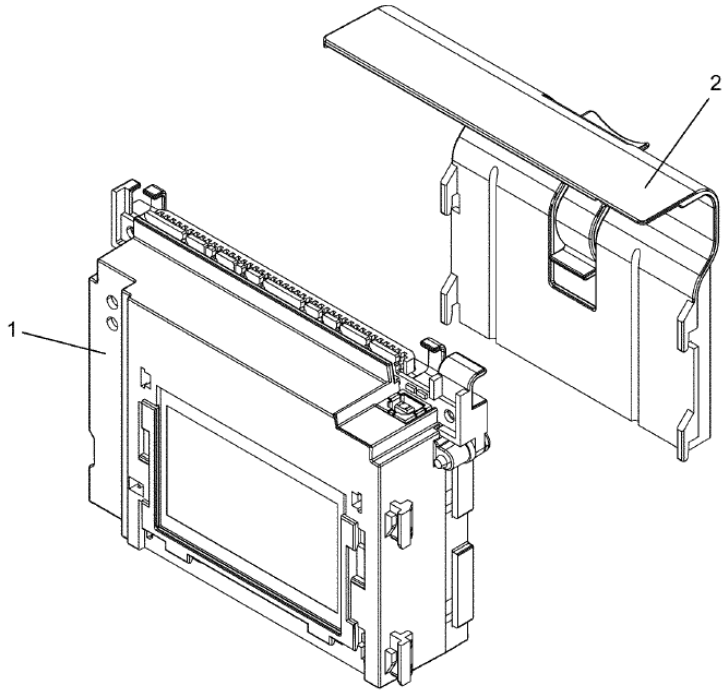

500159

Issue Month Year
03 03 12

D767
CPU
CPU

Illustration	Issue	Month	
Illustration	Question	Mois	
500159/0	**1**	**2**	**2018**

Pos	Qty	Part.no	Description	Description	Notes
1	1	432682002	CPU	CPU	Without software. Software available on website.
2	1	432634607	Cover	Couvercle	

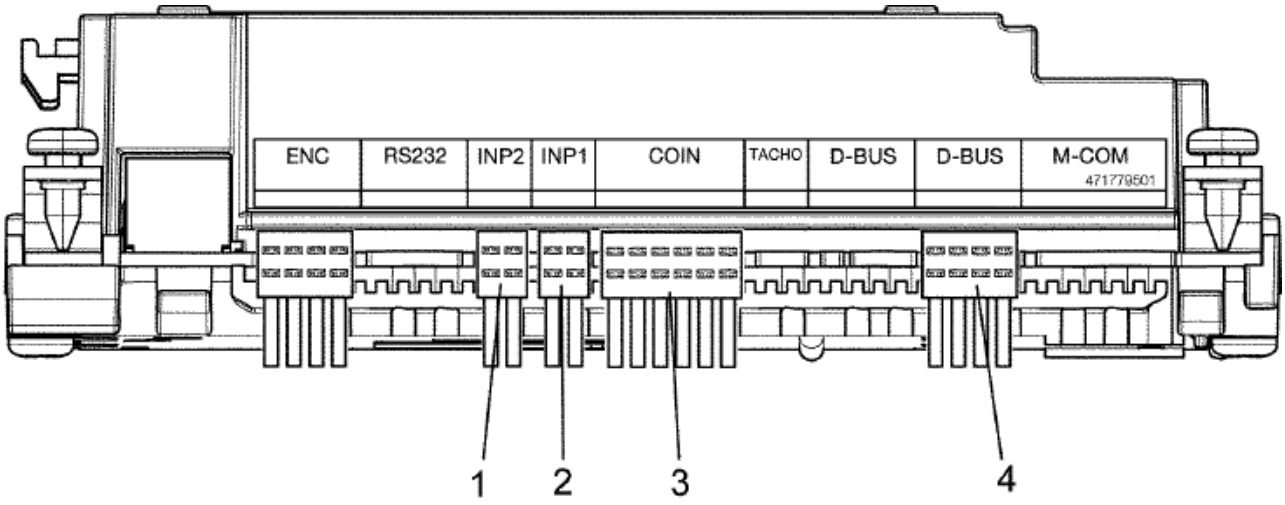
ENC
RS232
INP2
INP1
COIN
TACHO
D-BUS
D-BUS
M-COM
471779501
1
2
3
4

500534_01

D767
Cables CPU
Câble CPU

Illustration	Issue	Month	
Illustration	Question	Mois	
500534/0	**1**	**2**	**2018**

Pos	Qty	Part.no	Description	Description	Notes
1	1	413327221	Cable set	Jeu de câbles	2-pole
2	1	413327219	Cable set	Jeu de câbles	2-pole
3	1	413327601	Cable set	Jeu de câbles	6-pole
4	1	490350015	Cable set	Jeu de câbles	

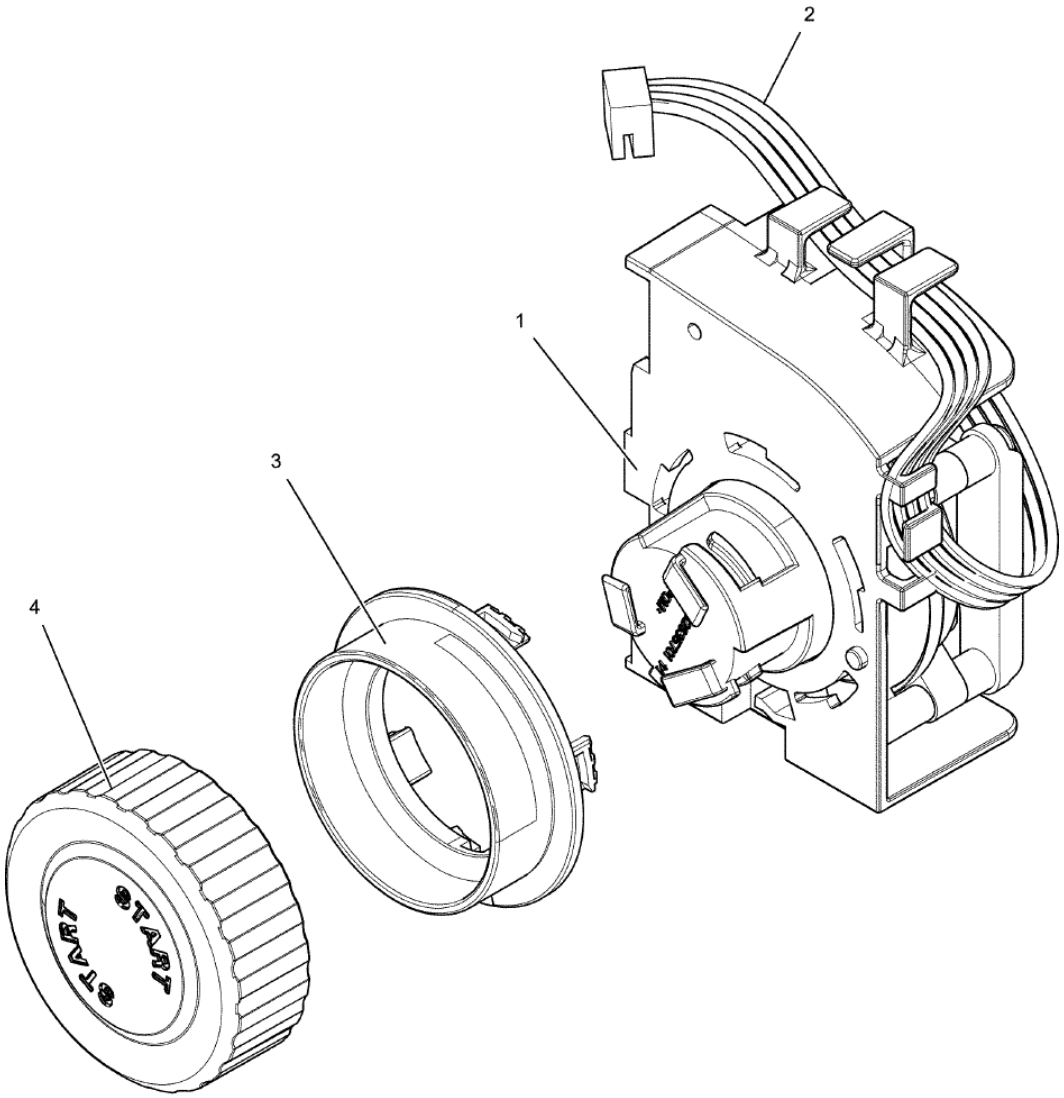

500160

Issue Month Year
01 03 11

D767
Program selector
Commutateur rotatif

Illustration	Issue	Month	
Illustration	Question	Mois	
500160/0	**1**	**2**	**2018**

Pos	Qty	Part.no	Description	Description	Notes
1	1	432681002	Program selector	Commutateur rotatif	
2	1	413327420	Cable set	Ensemble de câbles	4-pole
3	1	432635602	Cover	Couvercle	Black
4	1	432635503	Knob	Bouton	Black

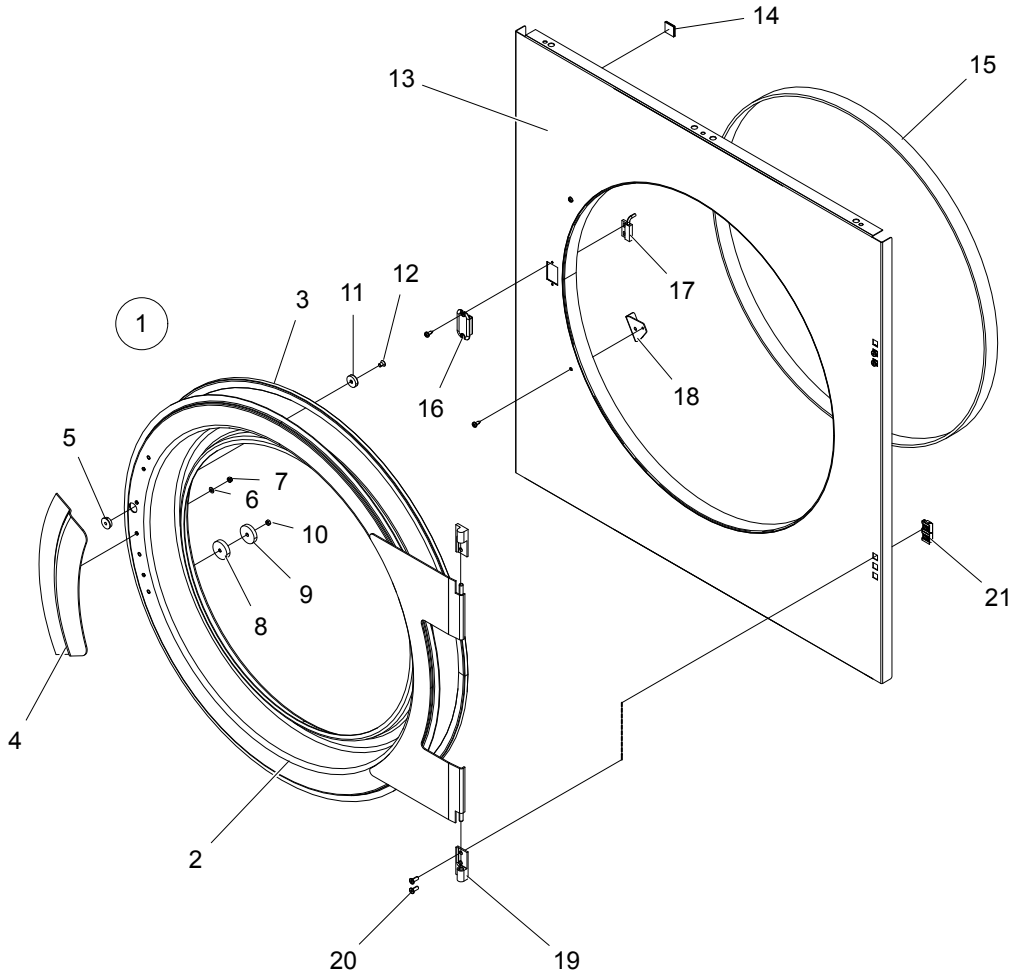

500689_01

D767
Door and front
Plaque et devant

Illustration	Issue	Month	
Illustration	Question	Mois	
500689/1	**1**	**2**	**2018**

Pos	Qty	Part.no	Description	Description	Notes
1	1	490355906	Door	Plaque	Complete
2	1	490355823	Door ring	Anneau de la porte	Complete
3	1	490380403	• *Door gasket*	• *Joint de la porte*	Black
4	1	490380723	• *Handle*	• *Poignée*	Silver grey
5	1	490380901	• *Spacer*	• *Entretoise*	
6	4	734113601	• *Washer*	• *Rondelle*	BRB 4,3X9
7	4	732211201	• *Locking nut*	• *Contre-écrou*	M4
8	3	490377601	• *Spacer*	• *Entretoise*	
9	3	490377701	• *Magnet*	• *Aimant*	
10	3	731231201	• *Nut*	• *Écrou*	M4
11	1	471957601	• *Magnet*	• *Aimant*	
12	1	471837701	• *Screw*	• *Vis*	M5X8
13	1	490351613	Front panel	Panneau avant	Shiny stainless steel
13	1	490351631	Front panel	Panneau avant	White
14	4	471786101	• *Holder*	• *Support*	
15	1	487176307	• *Seal*	• *Joint*	
16	1	490355101	Cover	Couvercle	
17	1	487027449	Magnetic switch	Commutateur magnétique	
18	2	490351911	Bracket	Support de montage	
19	1	487339002	Hinge	Charnière	Complete
20	4	487176031	• *Screw*	• *Vis*	M5X12
21	4	471786405	Captive nut	Écrou rapide	

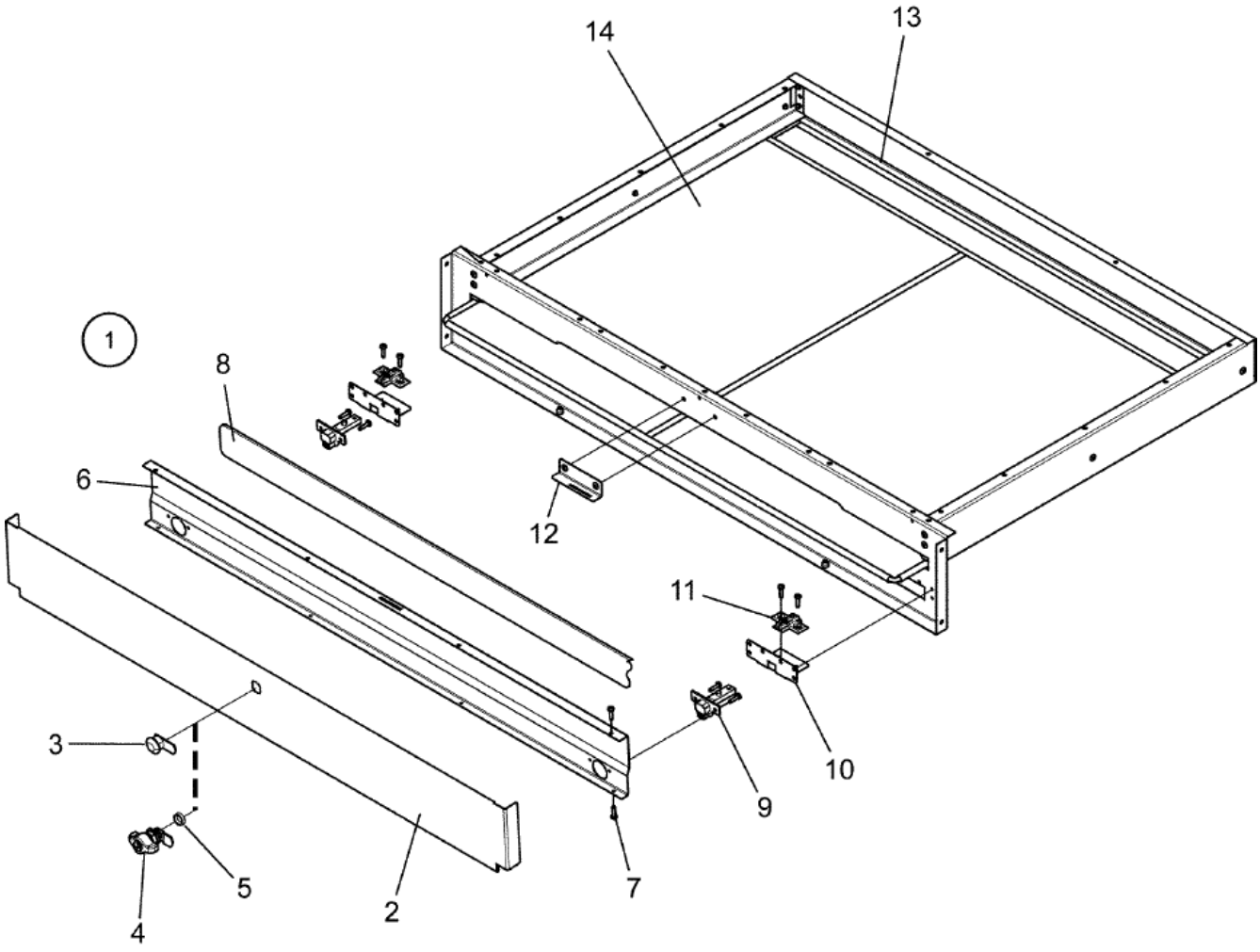

500142_04

D767
Filter hatch
Volet du filtre

Illustration	Issue	Month	
Illustration	Question	Mois	
500142/0	**1**	**2**	**2018**

Pos	Qty	Part.no	Description	Description	Notes
1	1	490352106	Filter hatch complete	Plaque filtre complète	Coin Shiny stainless steel
1	1	490352102	Filter hatch complete	Plaque filtre complète	Coin White
1	1	490352116	Filter hatch complete	Plaque filtre complète	OPL Shiny stainless steel
1	1	490352112	Filter hatch complete	Plaque filtre complète	White
2	1	490600213	• *Filter hatch*	• *Volet du filtre*	Shiny stainless steel
2	1	490600231	• *Filter hatch*	• *Volet du filtre*	White
3	1	471782610	• *Lock*	• *Serrure*	
4	1	487222380	• *Lock*	• *Serrure*	OPL
5	1	490381601	• *Spacer*	• *Entretoise*	
6	1	490600313	• *Rear panel*	• *Panneau arrière*	Shiny stainless steel
6	1	490600331	• *Rear panel*	• *Panneau arrière*	White
7	8	471836901	• *Screw*	• *Vis*	
8	1	490363601	• *Seal*	• *Joint*	
9	2	487090901	• *Hinge*	• *Charnière*	
10	2	490352401	• *Bracket*	• *Support de montage*	
11	2	487090801	• *Mounting plate*	• *Plaque de montage*	
12	1	490356521	Lock fastener	Fixation de serrure	Grey
13	1	490356701	Seal	Joint	
14	1	490353202	Filter	Filtre	

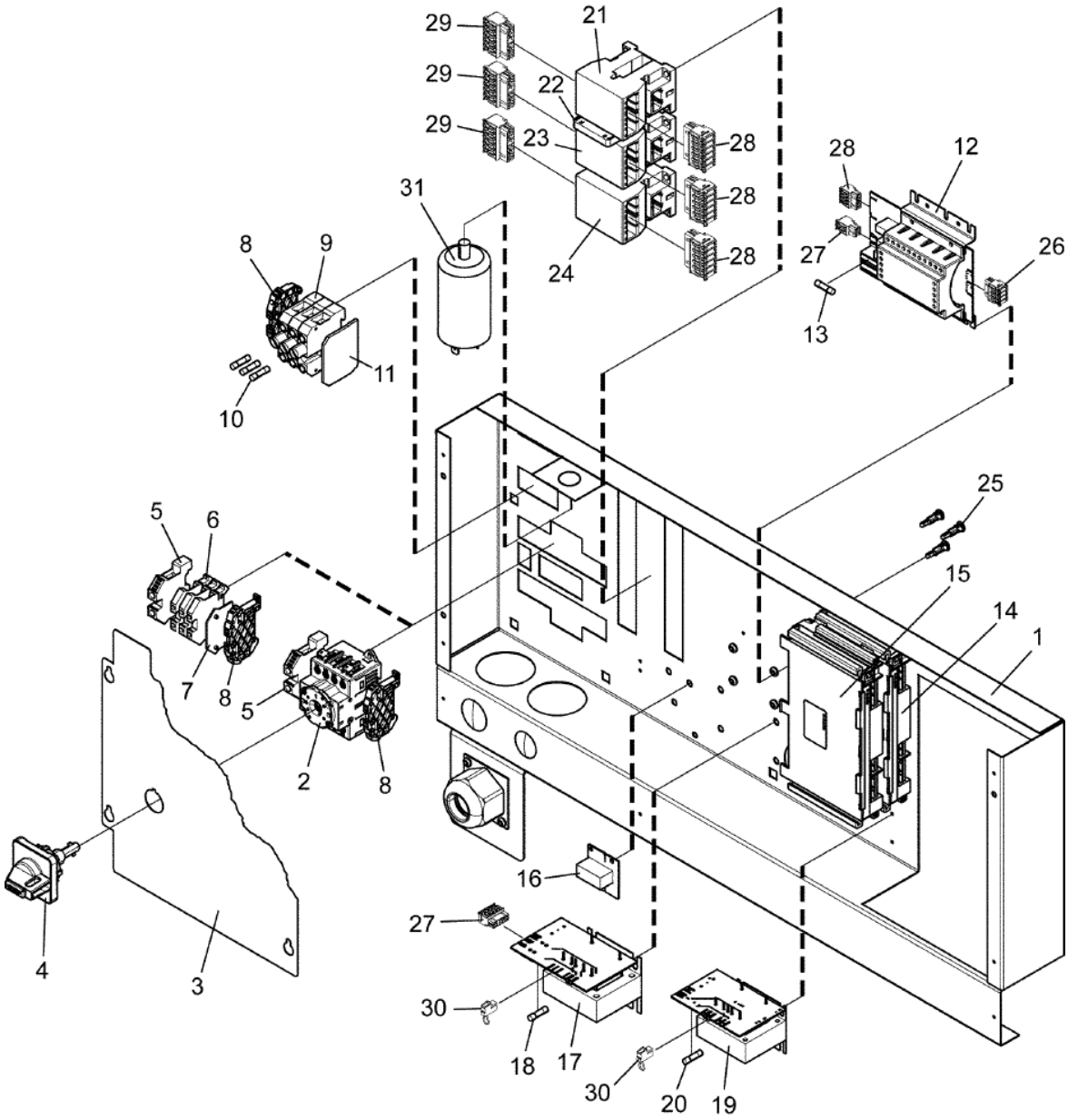
29
29
29
21
22
23
24
28
28
28
31
8
9
11
10
28
12
27
26
13
5
6
7
8
5
2
8
25
15
14
1
16
27
30
18
17
30
20
19
4
3

500168_04

D767
Electric components connection
Composants électriques raccordement électrique

Illustration	Issue	Month	
Illustration	Question	Mois	
500168/0	**3**	**3**	**2019**

Pos	Qty	Part.no	Description	Description	Notes
1	1	490375202	Component panel	Panneau composants	
2	1	438967811	Main switch	Interrupteur général	4-pole, 32A
2	1	438967804	Main switch	Interrupteur général	3-pole, 80A
2	1	438967814	Main switch	Interrupteur général	4-pole, 80A
2	1	438967815	Main switch	Interrupteur général	4-pole, 125A
3	1	490360001	Cover plate	Plaque recouvrement	With hole
3	1	490360002	Cover plate	Plaque recouvrement	Without hole
4	1	471967894	Turning device	Dispositif	
5	Rq	471876701	Ground terminal	Borne de terre	SL10
5	Rq	471876702	Ground terminal block	Borne de terre	SL16
5	Rq	471876703	Ground terminal block	Borne de terre	SL35
6	Rq	438876107	Terminal block	Bloc de connexion	
7	Rq	438876190	End plate	Panneau arrière	
8	Rq	487015540	End stop	Butée	
9	3	487015501	Fuse holder	Porte-fusible	200-480V
10	3	487028929	Fuse	Porte-fusible	T10A
11	1	487015540	End stop	Butée	
12	1	432680507	Power supply	Alimentation	3,15A
13	2	471875055	• *Fuse*	• *Porte-fusible*	3,15 A
14	1	432680803	I/O module	Module I/O	Type 82
15	1	432693005	I/O module	Module I/O	Type 2
16	1	438876301	Printed circuit board	Circuit imprimé	120V
16	1	438876302	Printed circuit board	Circuit imprimé	230V
17	1	438957401	Transformer	Transformateur	
18	1	471875023	• *Fuse*	• *Porte-fusible*	0,315AT
19	1	472996101	Kit	Kit de réparation	Removing kit, Trafo, 120V
19	1	438957502	Transformer	Transformateur	208-240V
19	1	472996701	Kit	Kit de réparation	Replacing kit, Trafo, 208-240V
20	1	471875024	• *Fuse*	• *Porte-fusible*	0,125AT
21	Rq	432963602	Contactor	Relais	220-240V 50Hz

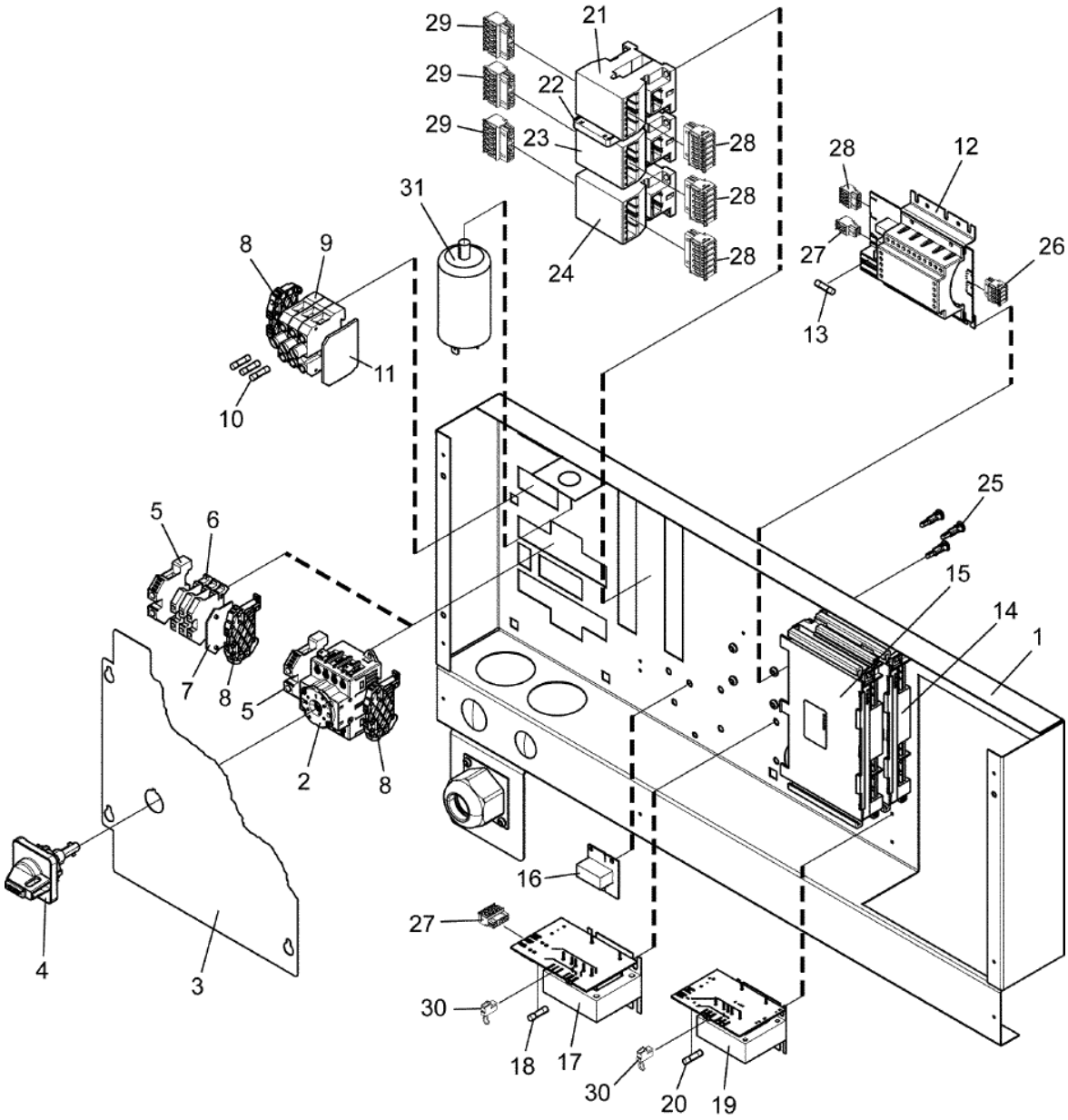
29
29
29
21
22
23
24
28
28
28
31
8
9
11
10
28
12
27
26
13
5
6
7
8
5
2
8
25
15
14
1
16
27
30
18
17
30
20
19
4
3

500168_04

D767
Electric components connection
Composants électriques raccordement électrique

Illustration	Issue	Month	
Illustration	Question	Mois	
500168/0	**3**	**3**	**2019**

Pos	Qty	Part.no	Description	Description	Notes
21	Rq	432963603	Contactor	Relais	200-240V 60Hz
21	Rq	432963601	Contactor	Relais	120V 60Hz
22	1	487153565	Catch	Blocage	
23	Rq	432963602	Contactor	Relais	220-240V 50Hz
23	Rq	432963603	Contactor	Relais	200-240V 60Hz
23	Rq	432963601	Contactor	Relais	120V 60Hz
24	Rq	432963602	Contactor	Relais	220-240V 50Hz
24	Rq	432963603	Contactor	Relais	200-240V 60Hz
24	Rq	432963601	Contactor	Relais	120V 60Hz
25	3	471795802	Spacer element	Pièce écartement	
26	1	413327442	Cable set	Jeu de câbles	
27	1	490350127	Cable set	Jeu de câbles	200V 3AC, 380-480V 3AC
27	1	490350126	Cable set	Jeu de câbles	120V 1AC, 208-240V 1AC/1NAC/3AC, 380-415V 3NAC
28	1	490350006	Cable set	Jeu de câbles	200-480V 3AC/3NAC With reversing
28	1	490350008	Cable set	Jeu de câbles	200-480V 3AC/3NAC Without reversing
28	1	490350010	Cable set	Jeu de câbles	120V 1AC, 208-240V 1AC With reversing
28	1	490350012	Cable set	Jeu de câbles	120V 1AC, 208-240V 1AC Without reversing
29	1	490350009	Cable set	Jeu de câbles	200-480V 3AC/3NAC With reversing
29	1	490350013	Cable set	Jeu de câbles	200-480V 3AC/3NAC Without reversing
29	1	490350007	Cable set	Jeu de câbles	120V 1AC, 208-240V 1AC With reversing
29	1	490350012	Cable set	Jeu de câbles	120V 1AC, 208-240V 1AC Without reversing

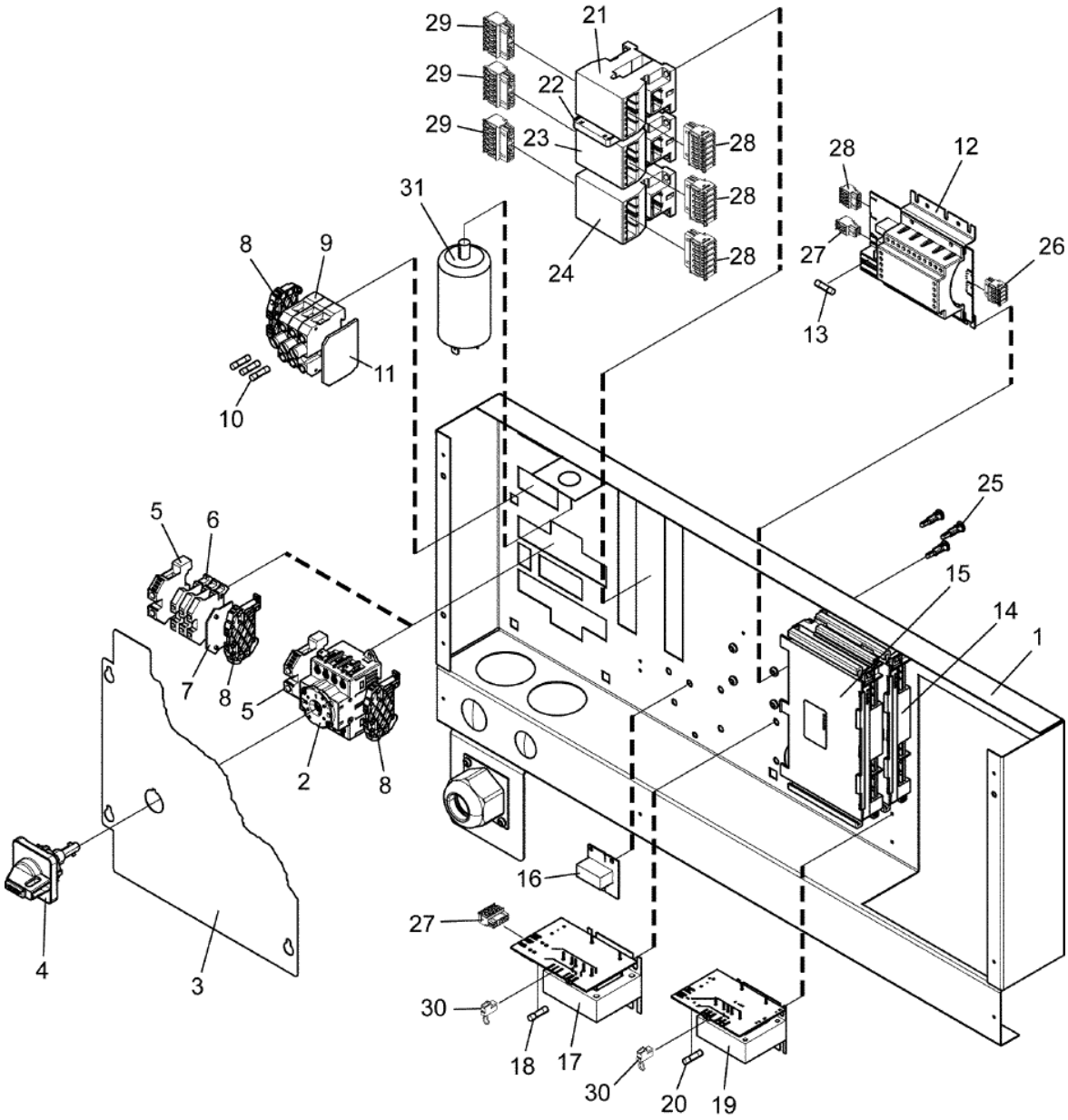
29
29
29
21
22
23
24
28
28
28
31
8
9
11
10
28
12
27
26
13
25
15
14
1
5
6
7
8
5
2
8
16
27
30
18
17
30
20
19
4
3

500168_04

D767
Electric components connection
Composants électriques raccordement électrique

Illustration	Issue	Month	
Illustration	Question	Mois	
500168/0	**3**	**3**	**2019**

Pos	Qty	Part.no	Description	Description	Notes
30	Rq	490442202	Cable set	Jeu de câbles	
31	1	487153579	X/Y capacitor	X/Y condensateur	EL*

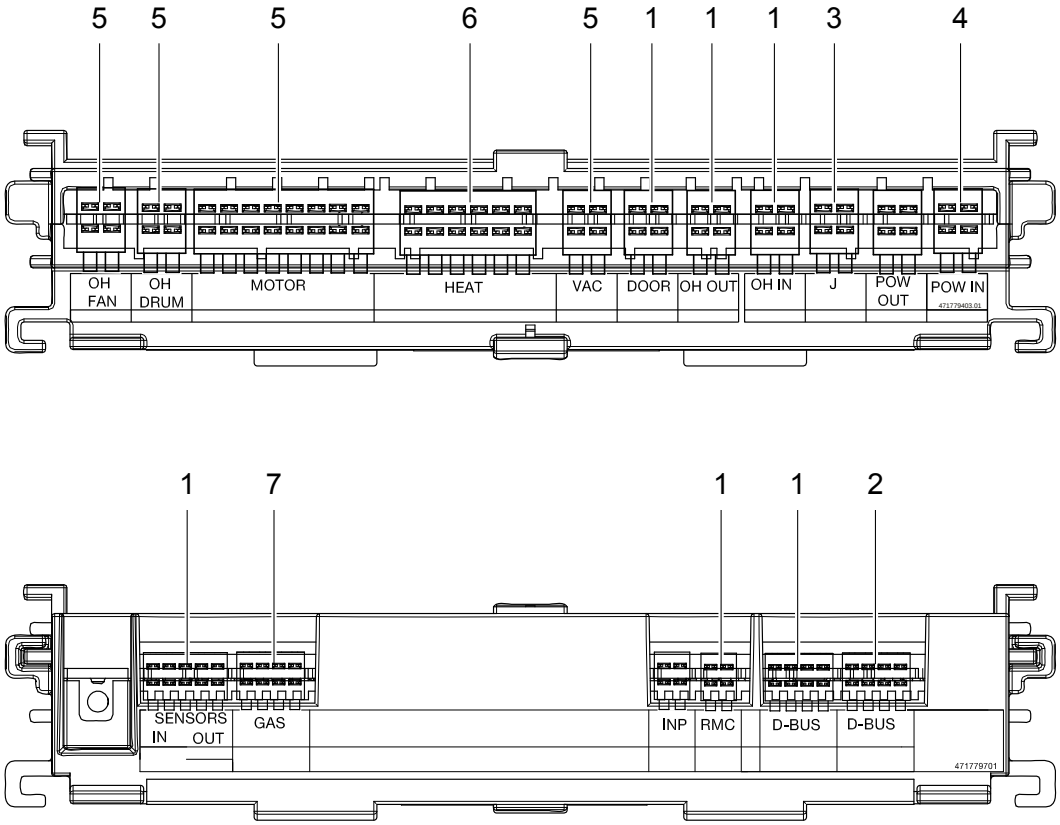
5
5
5
6
5
1
1
1
3
4
OH FAN
OH DRUM
MOTOR
HEAT
VAC
DOOR
OH OUT
OH IN
J
POW OUT
POW IN
471779403.01
1
7
1
1
2
SENSORS IN
OUT
GAS
INP
RMC
D-BUS
D-BUS
471779701

500535_03

D767
Cables I/O module type 82
Câbles module I/O type 82

Illustration	Issue	Month	
Illustration	Question	Mois	
500535/3	**1**	**7**	**2018**

Pos	Qty	Part.no	Description	Description	Notes
1	1	490350015	Cable set	Jeu de câbles	
2	1	413327442	Cable set	Jeu de câbles	
3	1	490442201	Cable set	Jeu de câbles	
4	1	490350006	Cable set	Jeu de câbles	200-480V 3AC/3NAC With reversing
4	1	490350008	Cable set	Jeu de câbles	200-480V 3AC/3NAC Without reversing
4	1	490350010	Cable set	Jeu de câbles	120V 1AC, 208-240V 1AC With reversing
4	1	490350012	Cable set	Jeu de câbles	120V 1AC, 208-240V 1AC Without reversing
5	1	490350009	Cable set	Jeu de câbles	200-480V 3AC/3NAC With reversing
5	1	490350013	Cable set	Jeu de câbles	200-480V 3AC/3NAC Without reversing
5	1	490350007	Cable set	Jeu de câbles	120V 1AC, 208-240V 1AC With reversing
5	1	490350012	Cable set	Jeu de câbles	120V 1AC, 208-240V 1AC Without reversing
6	1	490444003	Cable set	Jeu de câbles	EL.
7	1	490444021	Cable set	Jeu de câbles	Gas 208-240 USA
7	1	490444016	Cable set	Jeu de câbles	Gas

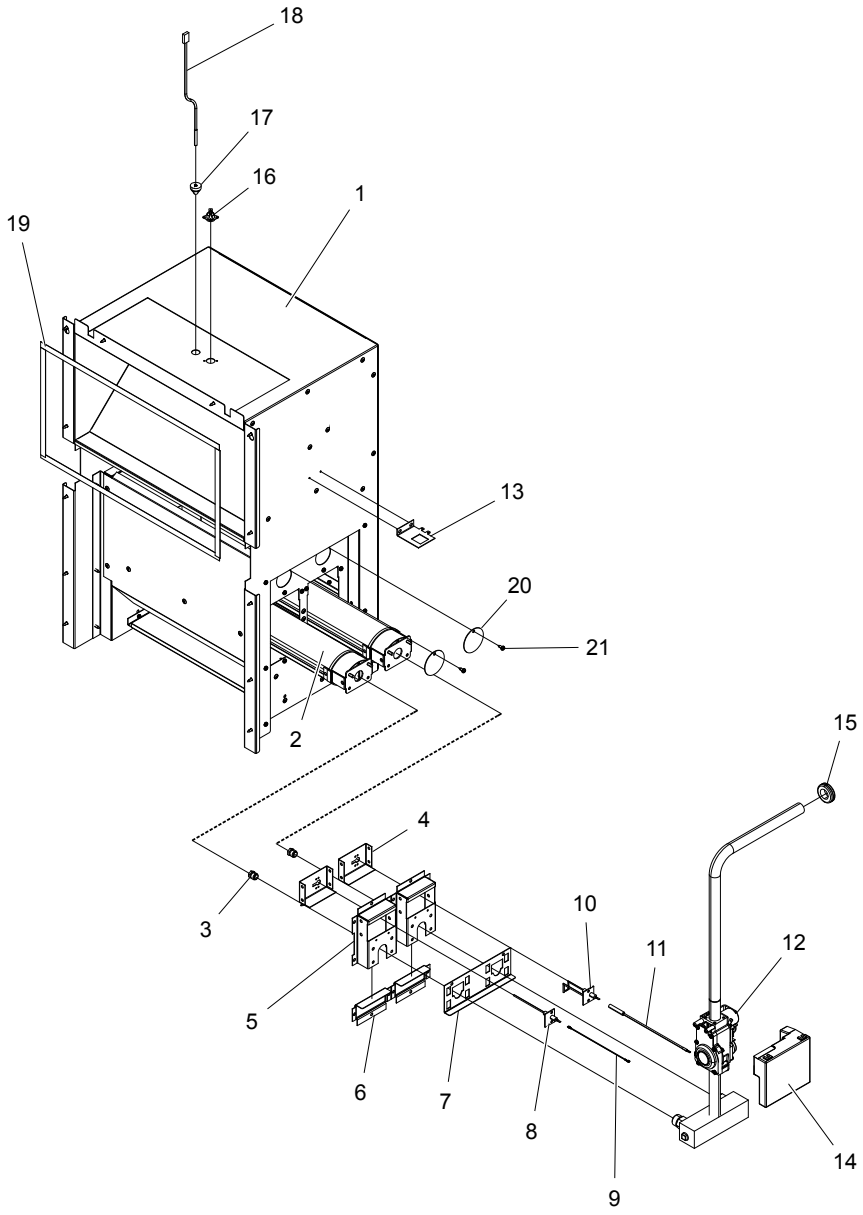

500693_01

D767
Assy, heater-gas
Élément chauffant, gaz

Illustration	Issue	Month	
Illustration	Question	Mois	
500693/1	**1**	**2**	**2018**

Pos	Qty	Part.no	Description	Description	Notes
1	1	490357801	Cover plates	Plaques de recouvrement	Complete
2	2	487170117	Burner	Brêleur	
3	2	471985348	Nozzle	Buse	Ø3,5
3	2	471985391	Nozzle	Buse	Ø2,9
3	2	471985389	Gas nozzle	Embout de gaz	Ø2,0
3	2	471985365	Gas nozzle	Embout de gaz	Ø2,2
3	1	471995001	High altitude kit LPG	Haute altitude kit LPG	2001-4000 FT
3	1	471995002	High altitude kit LPG	Haute altitude kit LPG	4001-6000 FT
3	1	471995003	High altitude kit LPG	Haute altitude kit LPG	6001-8000 FT
4	2	490378501	Bracket	Pièce de retenue	
5	2	490359311	Bracket	Pièce de retenue	
6	2	490359201	Damper plate	Tôle de réduction	GNH
6	2	490359203	Damper plate	Tôle de réduction	GNH
6	2	490359204	Damper plate	Tôle de réduction	LPG
7	1	490359501	Lock plate	Case de serrure	
8	1	487006828	Sensor	Détecteur	
9	1	487230931	Cable	Câble	
10	1	487006822	Electrode	Électrode	
11	1	487230930	Ignition cable	Câble d'allumage	
12	1	490359902	Gas valve with pipe	Vanne de gaz avec tube	USA Complete
13	1	490362801	• *Bracket*	• *Support de montage*	
14	1	471989002	Box, control	Boîtier de contrôle	USA 110V
15	1	487230728	Grommet	Oeillet	21x31x38mm
16	1	487027433	Thermostat	Thermostat	195° C
17	1	487230758	Pressure meter	Bouchon en caoutchouc	
18	1	487027432	Sensor	Détecteur	PT100
19	1	490374001	Sealing strip	Bande d'étanchéité	Per 1m
20	2	487170122	Cover plate	Plaque recouvrement	
21	2	471836901	Screw	Vis	

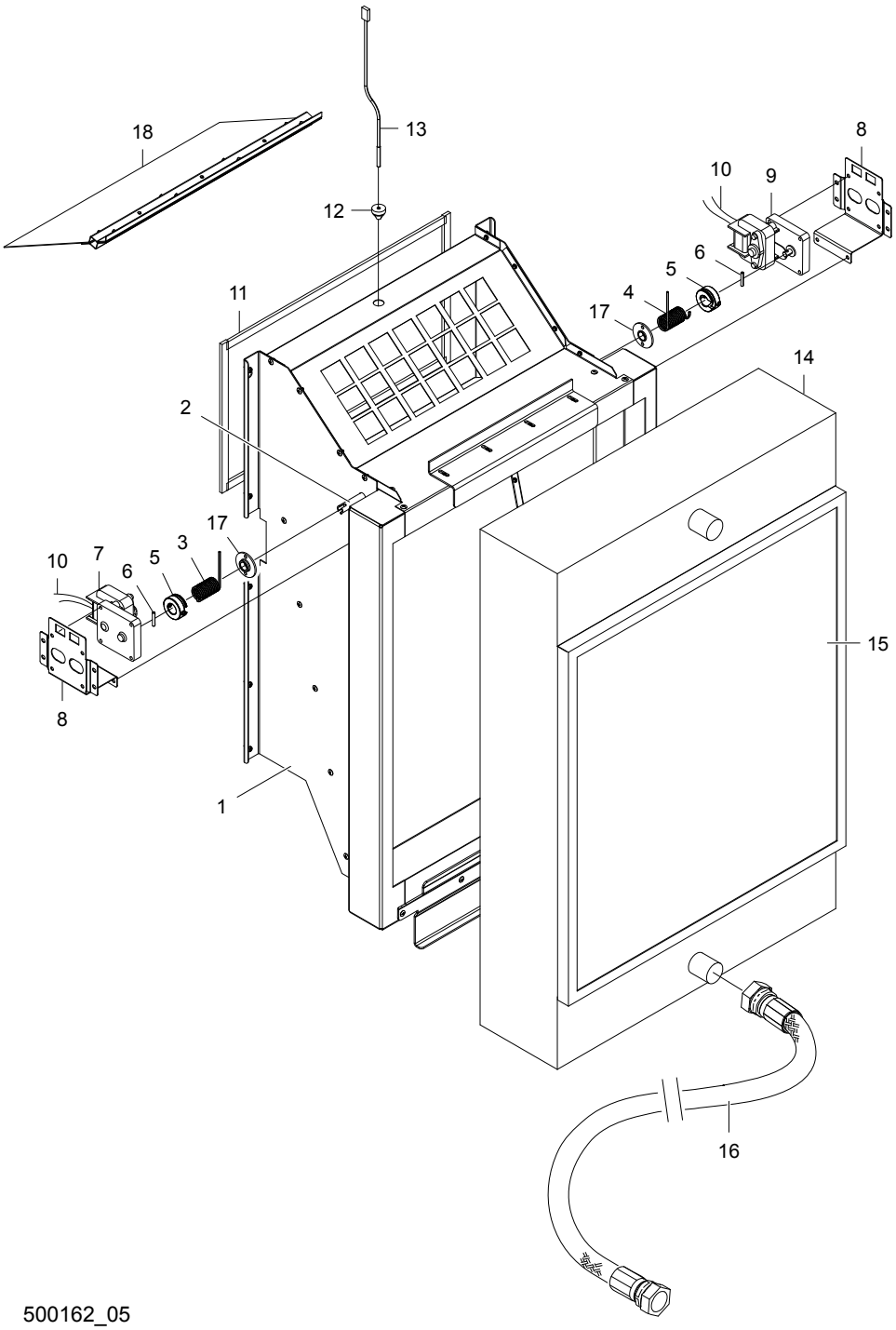

500162_05

D767
Heating unit, steam
Unité chauffage, vapeur

Illustration	Issue	Month	
Illustration	Question	Mois	
500162/0	**1**	**2**	**2018**

Pos	Qty	Part.no	Description	Description	Notes
1	1	490361501	Cover plates	Plaques de recouvrement	Complete, incl. pos. 2, 17 and 18
2	2	490362201	• *Shaft*	• *Arbre*	- S/N 18567, Use kit 490377902
3	1	471780401	Torsion spring	Ressort rotatif	
4	1	471780400	Torsion spring	Ressort rotatif	
5	2	490386402	Spring washer	Rondelle à ressort	
6	2	721425840	Split pin	Goupille de tube	
7	1	471972704	Motor	Moteur	220V 50/60Hz
7	1	471972705	Motor	Moteur	120V 60Hz
8	2	490362301	Bracket	Support de montage	
9	1	471972701	Motor	Moteur	220V 50/60Hz
9	1	471972702	Motor	Moteur	120V 60Hz
10	1	490350123	Cable set	Jeu de câbles	
11	1	490374001	Sealing strip	Bande d'étanchéité	Per 1m
12	1	487230758	Pressure meter	Bouchon en caoutchouc	
13	1	487027432	Sensor	Détecteur	PT100
14	1	490378601	Steam battery	Réservoir de piles	
15	1	490378602	• *Filter*	• *Filtre*	
16	1	487160013	Steam hose	Tuyau flexible de vapeur	Kit compl 1''x1200mm
16	2	487236843	• *Steam hose*	• *Tuyau flexible de vapeur*	
16	4	487236845	• *Coupling*	• *Embrayage*	1˝ BSP
16	1	487160014	Steam hose	Tuyau flexible de vapeur	Kit compl 1''x1200mm
16	2	487236843	• *Steam hose*	• *Tuyau flexible de vapeur*	
16	2	487236845	• *Coupling*	• *Embrayage*	1˝ BSP
16	2	487236844	• *Coupling*	• *Embrayage*	1˝ NPT
17	2	490503201	Bushing	Douille	
18	1	490362571	Damper plate	Tôle de réduction	- S/N 18567, Use kit 490377902 Compl.

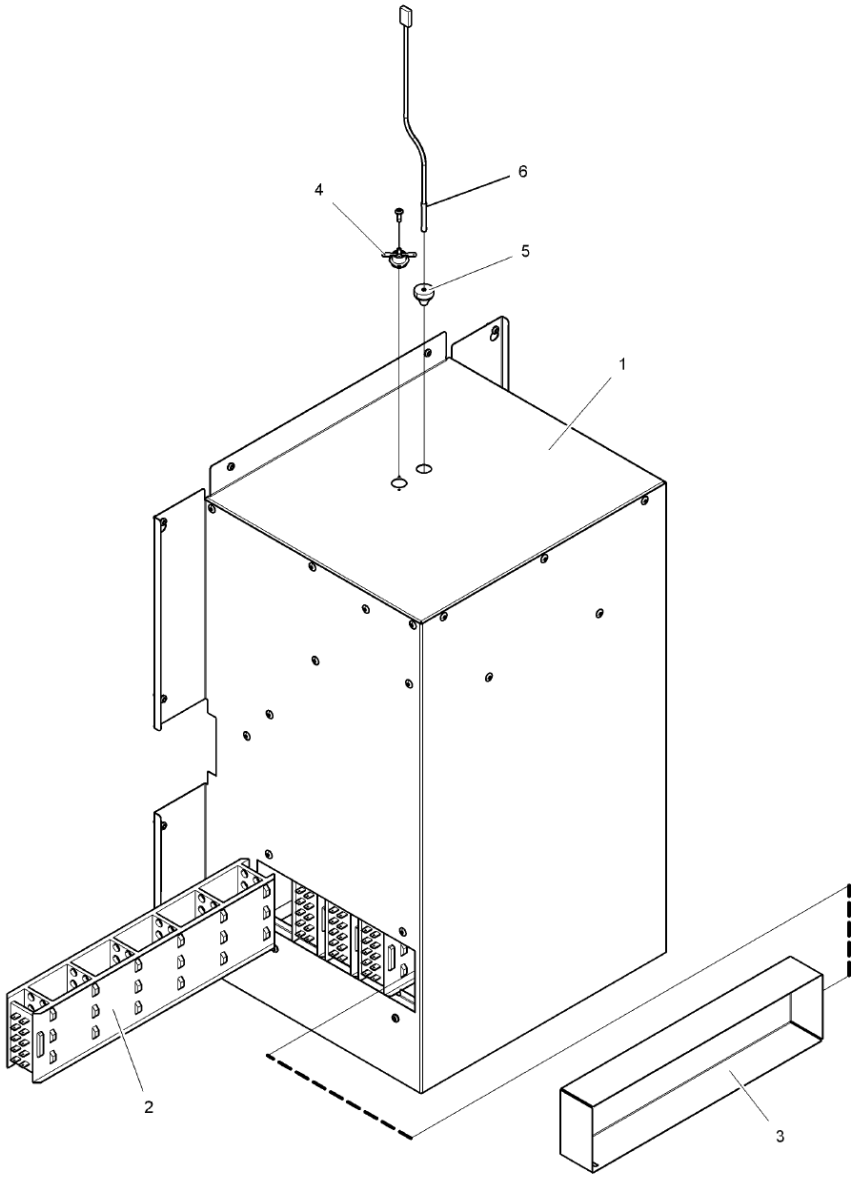

500147

Issue Month Year
01 05 10

D767
Assy, heater-el
Élément chauffant, el

Illustration	Issue	Month	
Illustration	Question	Mois	
500147/0	**1**	**2**	**2018**

Pos	Qty	Part.no	Description	Description	Notes
1	1	490360701	Cover plates	Plaques de recouvrement	Complete
2	Rq	487153177	Heating element	Élément chauffant	200V 8kW
2	Rq	487153173	Heating element	Élément chauffant	230V 8kW
2	Rq	487153175	Heating element	Élément chauffant	240V 8kW
2	Rq	487153174	Heating element	Élément chauffant	254V 8kW
2	Rq	487153176	Heating element	Élément chauffant	277V 8kW
2	Rq	487153161	Heating element	Élément chauffant	230/400V 6kW
3	Rq	487178119	Air reducing plate	Tôle de réduction	
4	1	487027433	Thermostat	Thermostat	195° C
5	1	487230758	Pressure meter	Bouchon en caoutchouc	
6	1	487027432	Sensor	Détecteur	PT100

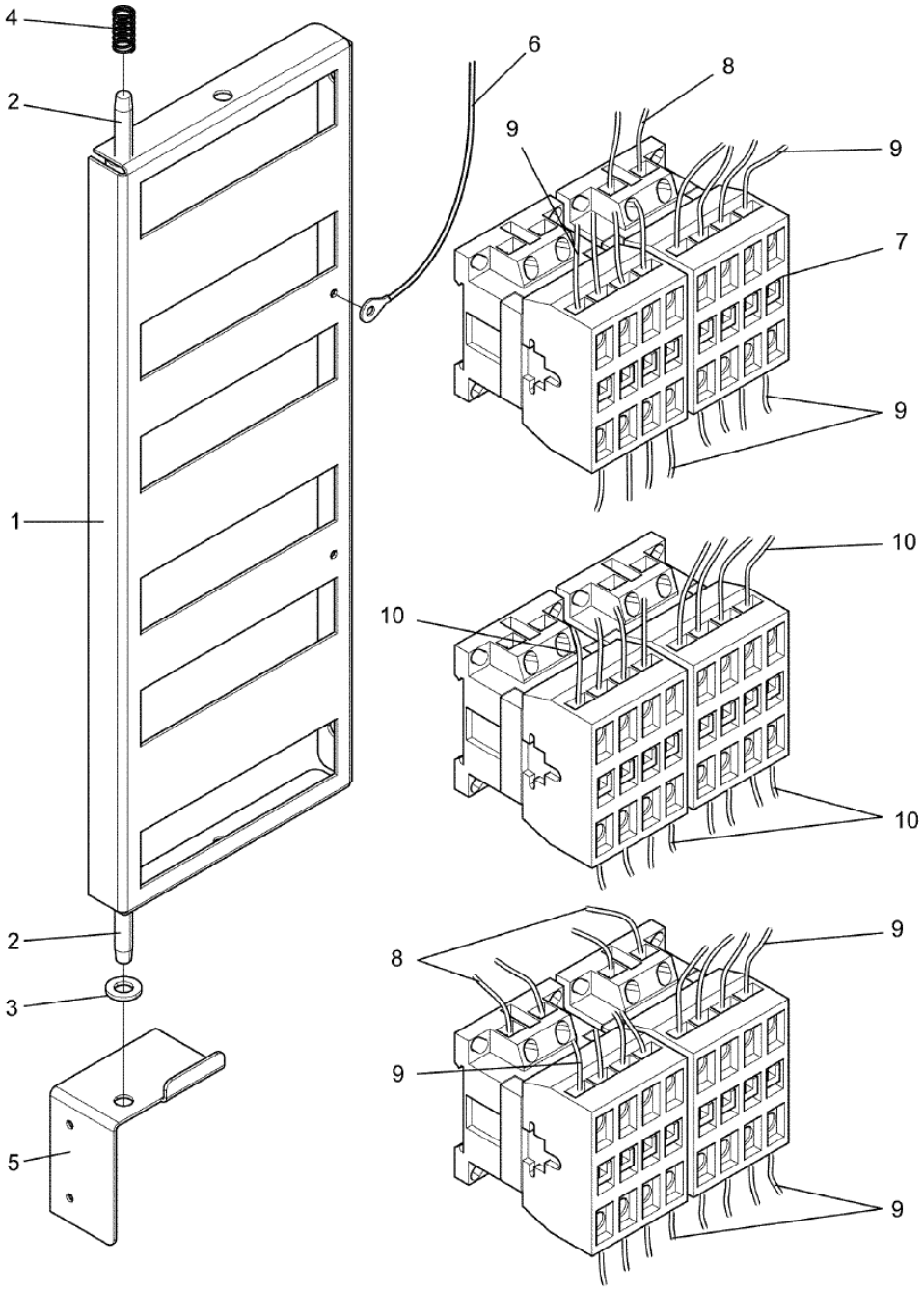

500400_01

D767
Contactor unit 200-240V 3AC
Contacteur 200-240V 3AC

Illustration	Issue	Month	
Illustration	Question	Mois	
500400/0	**1**	**2**	**2018**

Pos	Qty	Part.no	Description	Description	Notes
1	1	490374801	Bracket	Pupitre	
2	2	471834247	Screw	Vis	M6X25
3	1	734115301	Washer	Rondelle	BRB 6,4X12
4	1	471780310	Spring	Ressort	
5	1	490374901	Bracket	Support de montage	Lower
5	1	490375101	Bracket	Support de montage	Upper
6	1	490350158	Ground cable	Câble mise terre	
7	2	438963692	Contactor	Relais	24kW 50Hz
7	2	438963693	Contactor	Relais	24kW 60Hz
7	2	438963732	Contactor	Relais	24kW 50Hz
7	2	438963733	Contactor	Relais	24kW 60Hz
7	4	438963692	Contactor	Relais	32kW 50Hz
7	4	438963693	Contactor	Relais	32kW 60Hz
7	2	438963732	Contactor	Relais	32kW 50Hz
7	2	432963733	Contactor	Relais	32kW 60Hz
8	1	490444003	Cable set	Jeu de câbles	
9	1	490444007	Cable set	Jeu de câbles	
10	1	490444002	Cable set	Jeu de câbles	32kW

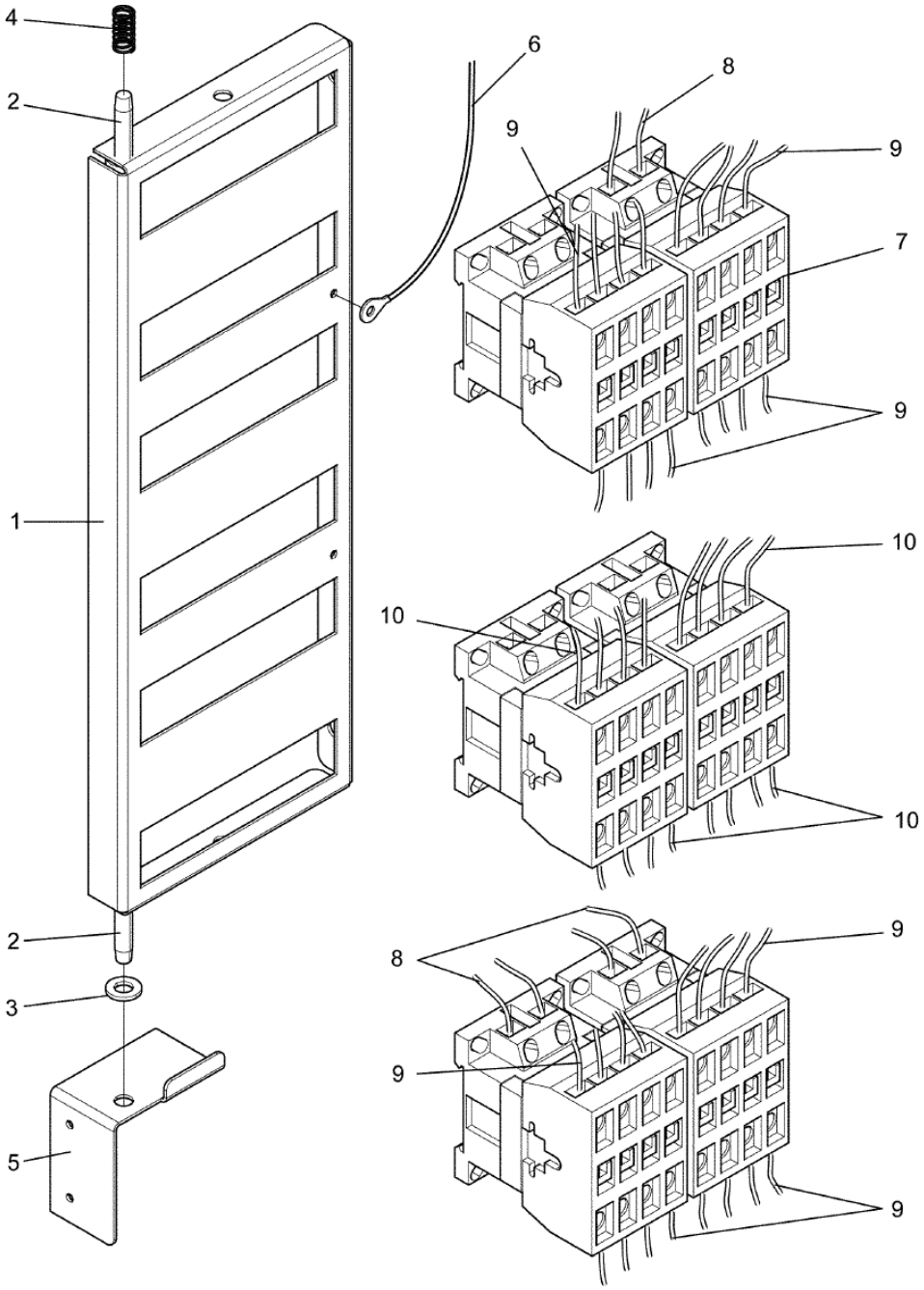

500402_01

D767
Contactor unit 380-480V 3AC
Contacteur 380-480V 3AC

Illustration	Issue	Month	
Illustration	Question	Mois	
500402/0	**1**	**2**	**2018**

Pos	Qty	Part.no	Description	Description	Notes
1	1	490374801	Bracket	Pupitre	
2	2	471834247	Screw	Vis	M6X25
3	1	734115301	Washer	Rondelle	BRB 6,4X12
4	1	471780310	Spring	Ressort	
5	1	490374901	Bracket	Support de montage	Lower
5	1	490375101	Bracket	Support de montage	Upper
6	1	490350158	Ground cable	Câble mise terre	
7	2	438963622	Contactor	Relais	24kW/18kW 220-240V 50Hz
7	2	438963623	Contactor	Relais	24kW 200-240V 60Hz
7	2	438963692	Contactor	Relais	24kW/18kW 50Hz
7	2	438963693	Contactor	Relais	24kW 60Hz
7	4	438963622	Contactor	Relais	32kW 220-240V 50Hz
7	4	438963623	Contactor	Relais	32kW 200-240V 60Hz
7	2	438963692	Contactor	Relais	32kW 50Hz
7	2	438963693	Contactor	Relais	32kW 60Hz
8	1	490444003	Cable set	Jeu de câbles	
9	1	490444008	Cable set	Jeu de câbles	24/18kW
10	1	490444006	Cable set	Jeu de câbles	32kW

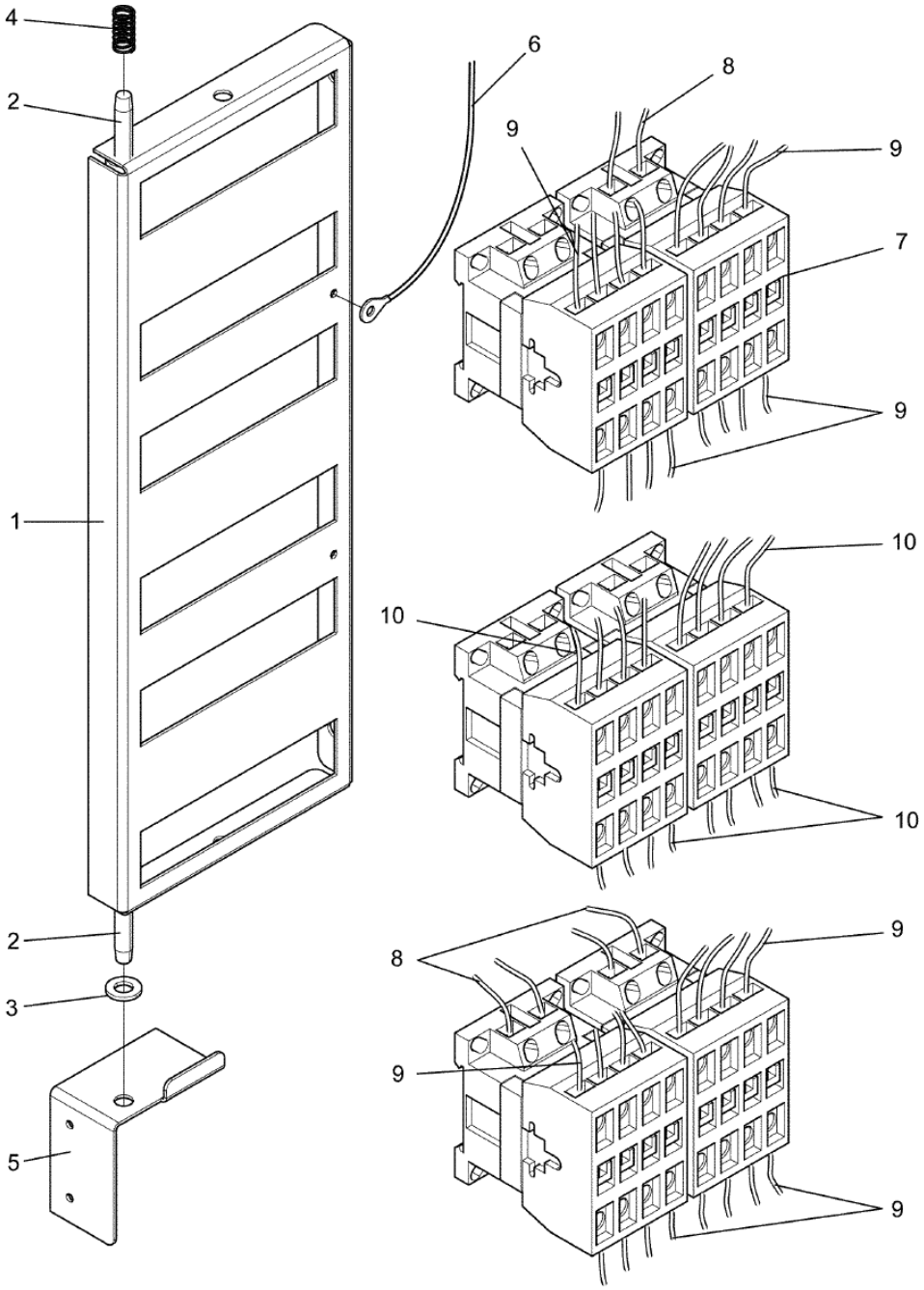

500403_01

D767
Contactor unit 220-240V 1AC
Contacteur 220-240V 1AC

Illustration	Issue	Month	
Illustration	Question	Mois	
500403/0	**1**	**2**	**2018**

Pos	Qty	Part.no	Description	Description	Notes
1	1	490374801	Bracket	Pupitre	
2	2	471834247	Screw	Vis	M6X25
3	1	734115301	Washer	Rondelle	BRB 6,4X12
4	1	471780310	Spring	Ressort	
5	1	490374901	Bracket	Support de montage	Lower
5	1	490375101	Bracket	Support de montage	Upper
6	1	490350158	Ground cable	Câble mise terre	
7	6	438963622	Contactor	Relais	220-240V 50Hz
7	6	438963623	Contactor	Relais	200-240V 60Hz
8	1	490444003	Cable set	Jeu de câbles	
9	1	490444008	Cable set	Jeu de câbles	24kW
10	1	490444010	Cable set	Jeu de câbles	24kW

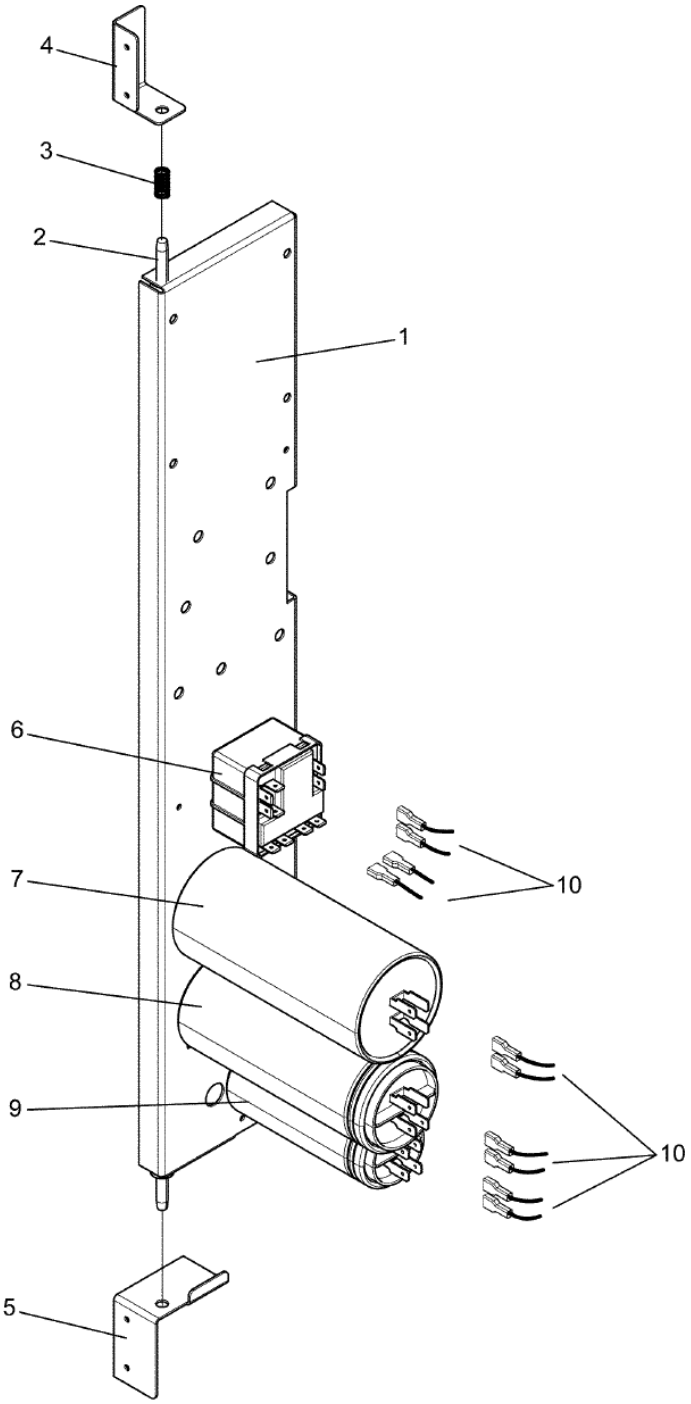

500166_02

D767
Capasitor unit
Unité condensateur

Illustration	Issue	Month	
Illustration	Question	Mois	
500166/0	**2**	**6**	**2018**

Pos	Qty	Part.no	Description	Description	Notes
1	1	490375001	Bracket	Pupitre	
2	2	471834247	Screw	Vis	M6X25
3	1	471780310	Spring	Ressort	
4	1	490374901	Bracket	Support de montage	
5	1	490375101	Bracket	Support de montage	
6	1	471956701	Start relay	Relais de démarrage	120V 1AC 60Hz 60Hz
6	1	471956702	Start relay	Relais de démarrage	208-240V 1AC 60Hz 208-240V 1AC 60Hz
6	1	471956703	Start relay	Relais de démarrage	230-240V 1AC 50Hz 220-240V 1AC 50Hz
7	1	471952526	Capacitor	Condensateur	208-240 1AC 60Hz 25µF
7	1	487028951	Capacitor	Condensateur	120V 1AC 60Hz 80µF
7	1	487189995	Capacitor	Condensateur	220-240V 1AC 50Hz 16µF
8	1	471952524	Capacitor	Condensateur	208-240V 1AC 40µF
8	1	471952528	Capacitor	Condensateur	120V 1AC 60Hz 160µF
9	1	471952524	Capacitor	Condensateur	120V 1AC 60Hz 40µF
9	1	487153576	Capacitor	Condensateur	208-240V 1AC 10µF
10	1	490350007	Cable set	Jeu de câbles	120V 1AC, 208-240V 1AC With reversing
10	1	490350012	Cable set	Jeu de câbles	120V 1AC, 208-240V 1AC Without reversing

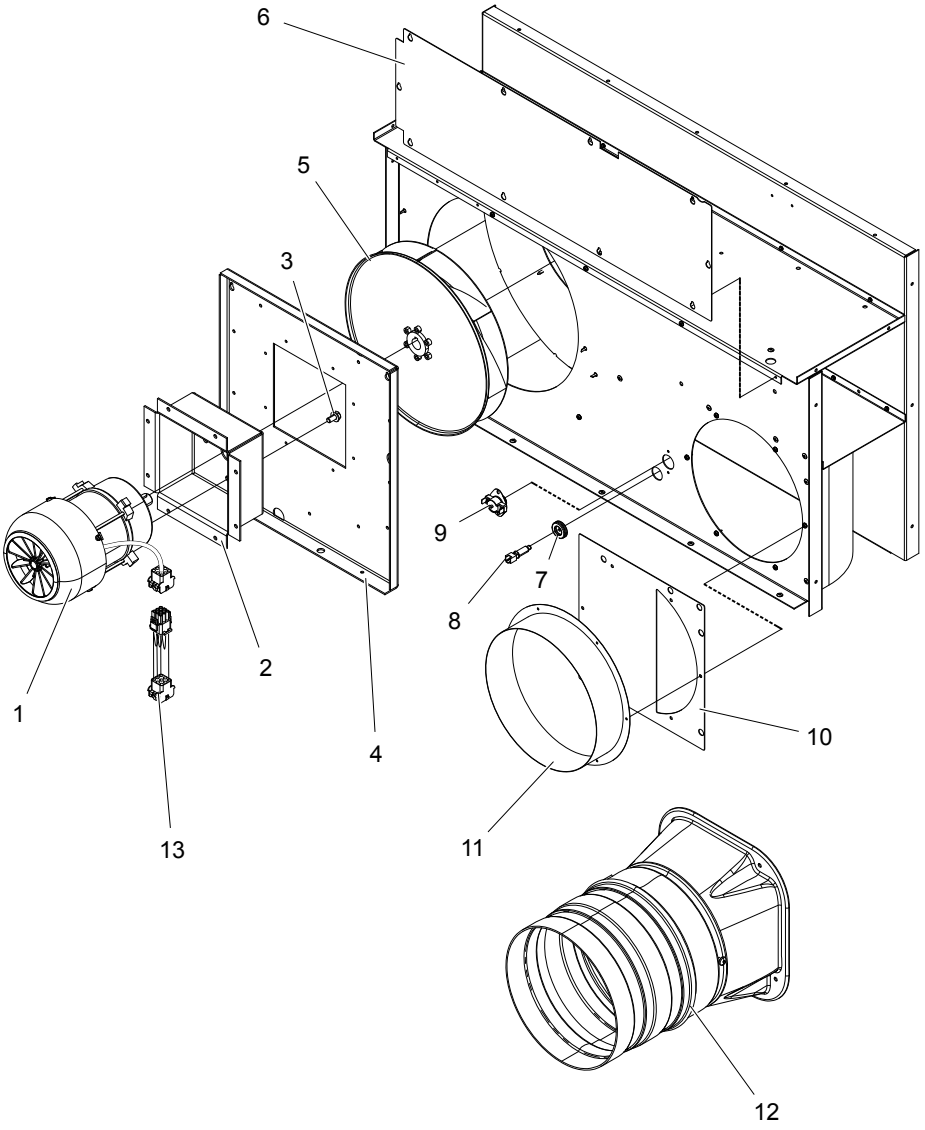

500694_01

D767
Fan unit
Dispositif de ventilation

Illustration	Issue	Month	
Illustration	Question	Mois	
500694/1	**1**	**2**	**2018**

Pos	Qty	Part.no	Description	Description	Notes
1	1	487028326	Motor	Moteur	200-480V 50/60Hz 3AC
1	1	487028320	Motor	Moteur	120V 60Hz 1AC
1	1	487028322	Motor	Moteur	200-240V 50/60Hz 1AC
2	1	490357101	Motor bracket	Support du moteur	EL.
3	4	725244951	Screw	Vis	M8X16
4	1	490354301	Mounting plate	Plaque de montage	
5	1	490373201	Fan wheel	Poulie ventilateur	El+Gas 50/60Hz Ø315X40
5	1	490373301	Fan wheel	Poulie ventilateur	Steam 50Hz 315X75
5	1	490373401	Fan wheel	Poulie ventilateur	Steam 60Hz 290X75
6	1	490354501	Cover plate	Plaque recouvrement	
7	1	125876000	Grommet	Oeillet	
8	1	487027434	Sensor	Détecteur	
9	1	487231784	Thermostat	Thermostat	
10	1	490373601	Damper plate	Tôle de réduction	92mm
10	1	490373501	Damper plate	Tôle de réduction	El 75mm
11	1	490374201	Outlet conduit	Tuyau d'écoulement	
12	1	487177501	Damper	Amortisseur	
13	1	490350102	Cable set	Jeu de câbles	200-240V 3AC

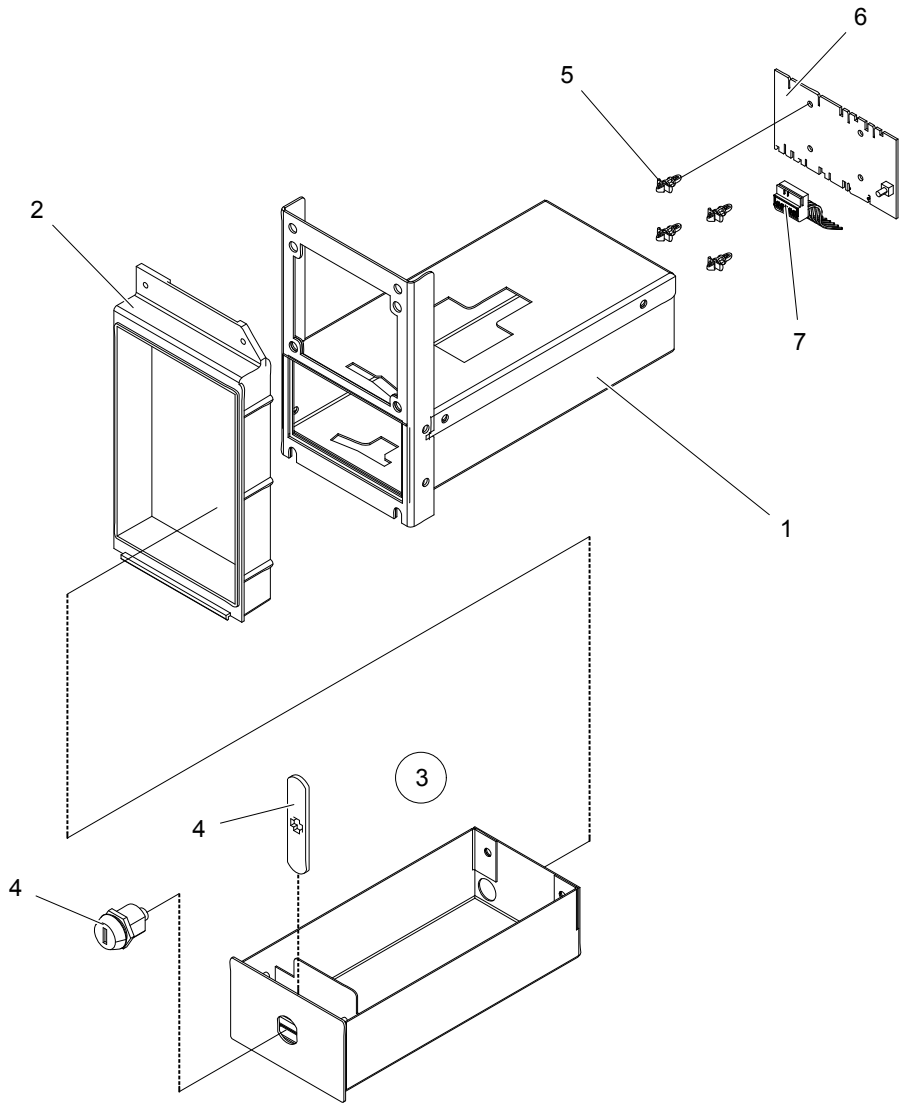

500698_01

D767
Coinbox housing (for coinbox height 60mm)
Logement de monnayeur (hauteur de monnayeur 60 mm)

Illustration	Issue	Month	
Illustration	Question	Mois	
500698/1	**1**	**2**	**2018**

Pos	Qty	Part.no	Description	Description	Notes
1	1	432223102	• *Coinbox housing*	• *Logement de monnayeur*	
2	1	432217303	• *Frame*	• *Base*	Silver grey
3	1	432223303	Coin box	Boîtier à jetons	Complete
4	1	472991930	• *Lock*	• *Serrure*	Random key
4	1	472991931	Lock	Serrure	key 46080
4	1	472991932	Lock	Serrure	key 46199
4	1	472991933	Lock	Serrure	key 46819
5	4	471796002	Support	Support	
6	1	438877501	Printed circuit board	Circuit imprimé	
6	1	438877507	Printed circuit board	Circuit imprimé	9V Blocking Electronic coin meter
7	1	413327601	Cable set	Jeu de câbles	6-pole

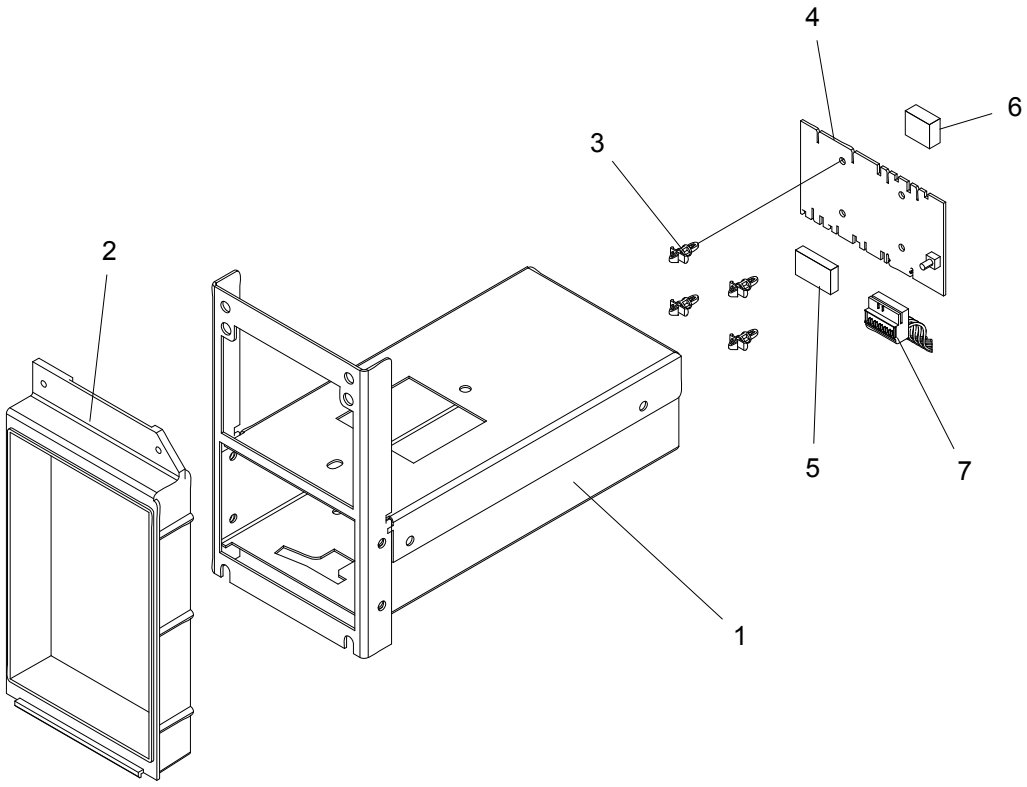

500699_02

D767
Coinbox housing (for coinbox height 70mm)
Logement de monnayeur (hauteur de monnayeur 70 mm)

Illustration	Issue	Month	
Illustration	Question	Mois	
500699/2	**2**	**1**	**2019**

Pos	Qty	Part.no	Description	Description	Notes
1	1	432223111	• *Coin box*	• *Boîtier à jetons*	
2	1	432217303	• *Frame*	• *Base*	Silver grey
3	4	471796002	Support	Support	
4	1	438877501	Printed circuit board	Circuit imprimé	
5	1	438870102	Frame	Châssis	3-pole
5	1	438870101	Edge connector	Multi-grippe	3-pole
6	1	438870104	Frame	Châssis	2-pole
6	1	438870103	Edge connector	Multi-grippe	2-pole
7	1	413327601	Cable set	Jeu de câbles	6-pole

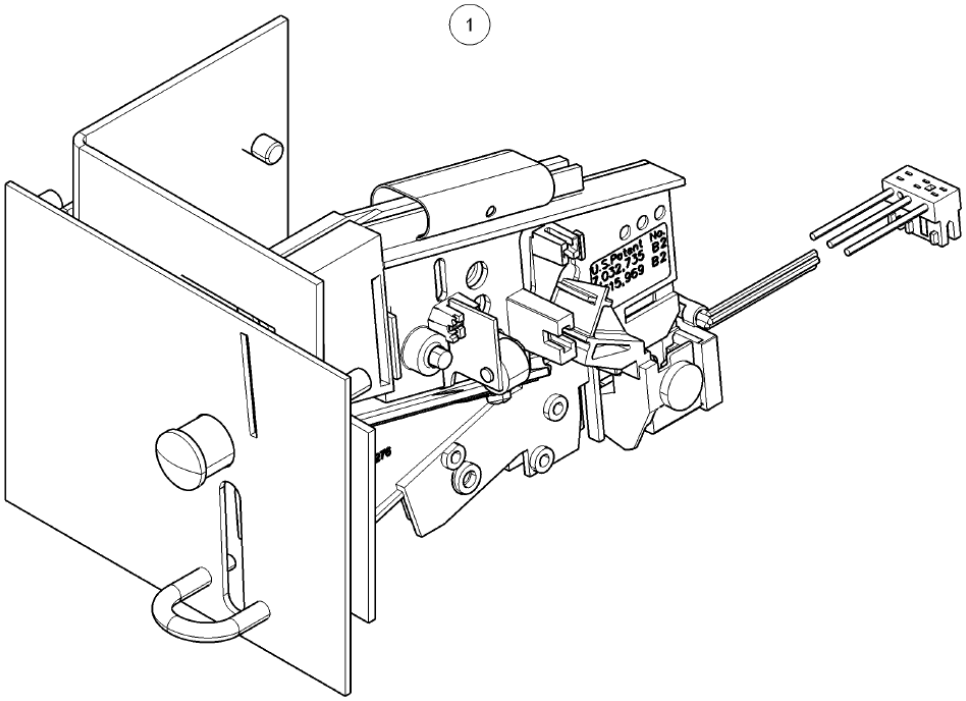

500172

Issue Month Year
01 12 10

D767
Coin meter USA
Monnayeur USA

Illustration	Issue	Month	
Illustration	Question	Mois	
500172/0	**1**	**2**	**2018**

Pos	Qty	Part.no	Description	Description	Notes
1	1	490382001	Coin meter	Monnayeur	1 Coin, 0,25 USD

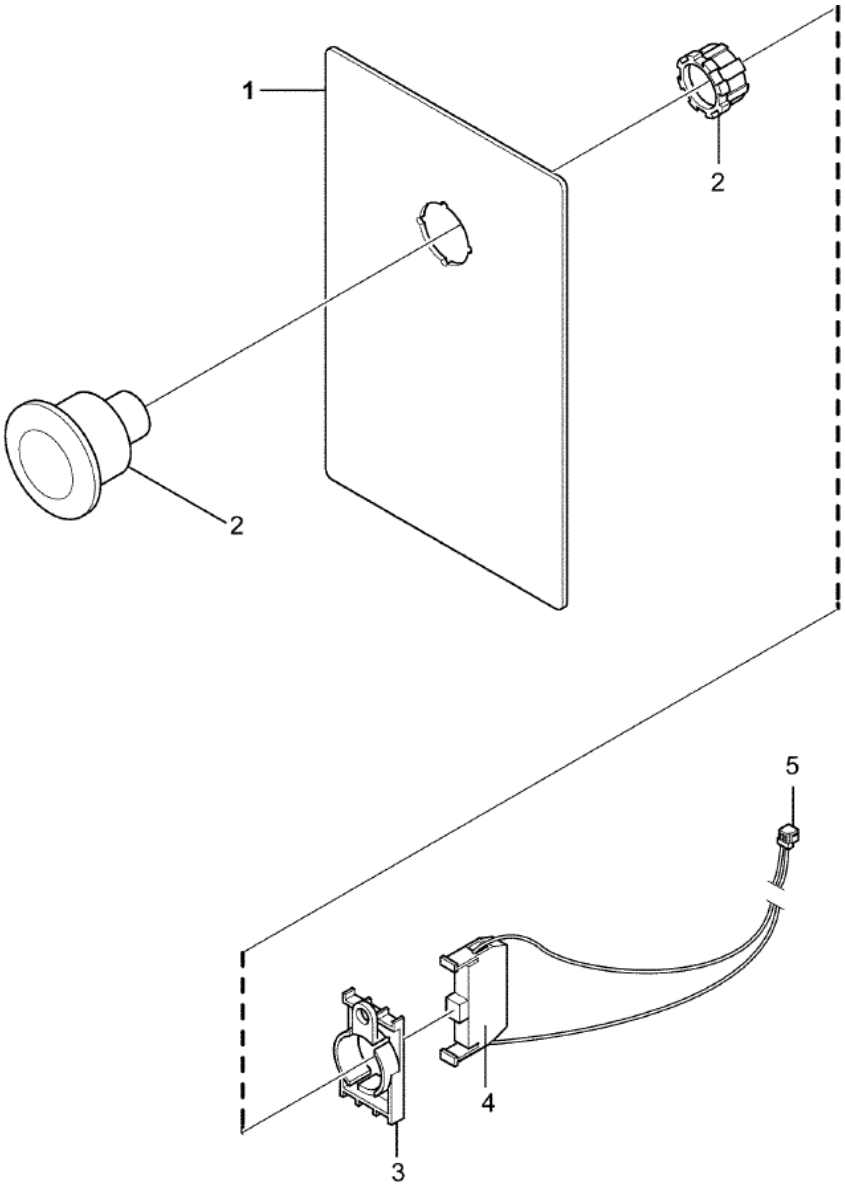

Issue	Month	Year
02	**05**	**11**

500209

D767
Stop button
Bouton d'arrêt

Illustration	Issue	Month	
Illustration	Question	Mois	
500209/0	**1**	**2**	**2018**

Pos	Qty	Part.no	Description	Description	Notes
1	1	432215042	Cover plate	Plaque recouvrement	Silver grey
2	1	438962830	Push button with white lamp	Bouton-poussoir à voyant blanc	
3	1	471962875	Connector for contact block	Connecteur du bloc de contact	
4	1	471962871	Socket	Bloc de connexion	NO Green
5	1	413327219	Cable set	Jeu de câbles	2-pole

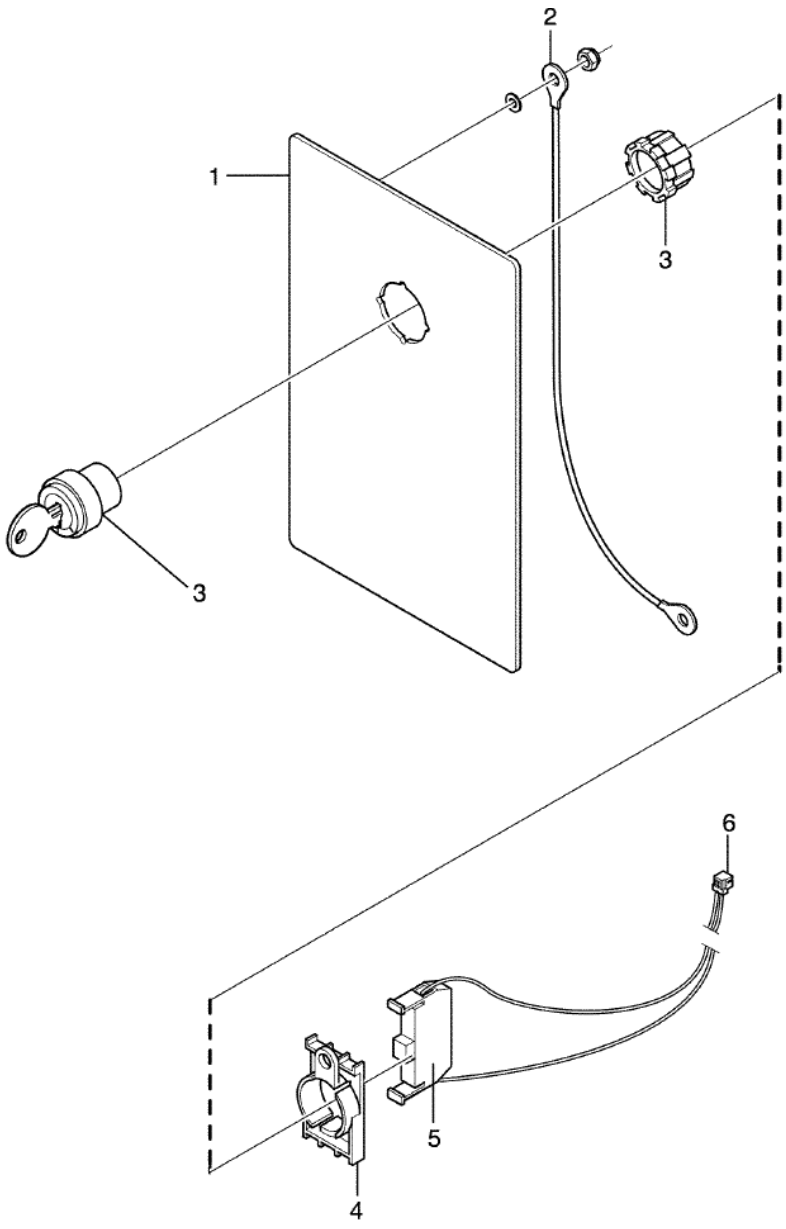

Issue	Month	Year
01	**05**	**11**

500218

D767
Key switch
Commutateur à touche

Illustration	Issue	Month	
Illustration	Question	Mois	
500218/0	**1**	**2**	**2018**

Pos	Qty	Part.no	Description	Description	Notes
1	1	432215042	Cover plate	Plaque recouvrement	Silver grey
2	1	432298220	Cable set	Jeu de câbles	
3	1	471962885	Key switch	Commutateur à touche	With key
4	1	471962875	Connector for contact block	Connecteur du bloc de contact	
5	1	471962871	Socket	Bloc de connexion	NO Green
6	1	413327221	Cable set	Jeu de câbles	2-pole

Numerical index/Numéro de répertoire

Part.no/Part.no	Page/Page	Part.no/Part.no	Page/Page	Part.no/Part.no	Page/Page	Part.no/Part.no	Page/Page
	7	438963692	43	471972702	39	487176031	25
	7	438963692	45	471972704	39	487176307	25
125876000	51	438963692	45	471972705	39	487177501	51
413327219	21	438963693	43	471985348	37	487178119	41
413327219	59	438963693	43	471985365	37	487187500	17
413327221	21	438963693	45	471985389	37	487189995	49
413327221	61	438963693	45	471985391	37	487192005	7
413327420	23	438963732	43	471989002	37	487192070	9
413327442	31	438963732	43	471995001	37	487192070	11
413327442	35	438963733	43	471995002	37	487193544	7
413327601	21	438967804	29	471995003	37	487197452	9
413327601	53	438967811	29	472991930	53	487197452	11
413327601	55	438967814	29	472991931	53	487222380	27
432215041	17	438967815	29	472991932	53	487230728	37
432215042	59	471780310	43	472991933	53	487230758	7
432215042	61	471780310	45	472993905	13	487230758	37
432217303	53	471780310	47	472993906	13	487230758	39
432217303	55	471780310	49	472996101	29	487230758	41
432223102	53	471780400	39	472996701	29	487230930	37
432223111	55	471780401	39	472997603	9	487230931	37
432223303	53	471782610	27	472997603	11	487231784	51
432298220	61	471786101	25	487006822	37	487231968	11
432632001	17	471786405	25	487006828	37	487236843	39
432634607	19	471795802	31	487010518	13	487236843	39
432635503	23	471796002	53	487015501	29	487236844	39
432635602	23	471796002	55	487015540	29	487236845	39
432680507	29	471834101	11	487015540	29	487236845	39
432680803	29	471834247	43	487027432	37	487339002	25
432681002	23	471834247	45	487027432	39	488014040	9
432682002	19	471834247	47	487027432	41	488014040	11
432693005	29	471834247	49	487027433	37	488037914	7
432963601	31	471836901	17	487027433	41	489011513	15
432963601	31	471836901	27	487027434	51	490350006	31
432963601	31	471836901	37	487027449	25	490350006	35
432963602	29	471837401	17	487028320	51	490350007	31
432963602	31	471837701	25	487028322	51	490350007	35
432963602	31	471850214	13	487028326	51	490350007	49
432963603	31	471850242	11	487028340	13	490350008	31
432963603	31	471875023	29	487028342	13	490350008	35
432963603	31	471875024	29	487028346	13	490350009	31
432963733	43	471875055	29	487028929	29	490350009	35
438816002	7	471876701	29	487028951	49	490350010	31
438870101	55	471876702	29	487090801	17	490350010	35
438870102	55	471876703	29	487090801	27	490350012	31
438870103	55	471886501	9	487090901	17	490350012	31
438870104	55	471886501	11	487090901	27	490350012	35
438876107	29	471886502	9	487137607	7	490350012	35
438876190	29	471886502	11	487137607	9	490350012	49
438876301	29	471952524	49	487137607	11	490350013	31
438876302	29	471952524	49	487153161	41	490350013	35
438877501	53	471952526	49	487153173	41	490350015	21
438877501	55	471952528	49	487153174	41	490350015	35
438877507	53	471956701	49	487153175	41	490350101	15
438957401	29	471956702	49	487153176	41	490350102	51
438957502	29	471956703	49	487153177	41	490350123	39
438962830	59	471957601	25	487153565	31	490350126	31
438963622	45	471962871	59	487153576	49	490350127	31
438963622	45	471962871	61	487153579	33	490350158	43
438963622	47	471962875	59	487160013	39	490350158	45
438963623	45	471962875	61	487160014	39	490350158	47
438963623	45	471962885	61	487170117	37	490350221	7
438963623	47	471967894	29	487170122	37	490350411	7
438963692	43	471972701	39	487170714	17	490350421	7

Numerical index/Numéro de répertoire

Part.no/Part.no	Page/Page	Part.no/Part.no	Page/Page	Part.no/Part.no	Page/Page	Part.no/Part.no	Page/Page
490350511	7	490369901	11	490444003	35		
490350521	7	490370510	17	490444003	43		
490351301	7	490370622	17	490444003	45		
490351613	25	490373001	11	490444003	47		
490351631	25	490373101	11	490444006	45		
490351901	9	490373201	51	490444007	43		
490351901	11	490373301	51	490444008	45		
490351911	25	490373401	51	490444008	47		
490352102	27	490373501	51	490444010	47		
490352106	27	490373601	51	490444016	35		
490352112	27	490374001	37	490444021	35		
490352116	27	490374001	39	490460701	7		
490352401	27	490374201	51	490500207	15		
490353202	27	490374301	13	490500281	13		
490353422	17	490374801	43	490500802	13		
490354301	51	490374801	45	490500804	15		
490354501	51	490374801	47	490500805	13		
490354601	9	490374901	43	490501708	9		
490354601	11	490374901	45	490501708	11		
490354801	9	490374901	47	490503201	39		
490354801	11	490374901	49	490503401	9		
490354901	9	490375001	49	490503401	11		
490354901	11	490375101	43	490503801	7		
490355101	25	490375101	45	490506001	7		
490355823	25	490375101	47	490506701	7		
490355906	25	490375101	49	490508201	7		
490356521	27	490375202	29	490600213	27		
490356701	27	490375356	17	490600231	27		
490356901	11	490376801	15	490600313	27		
490357001	11	490377401	15	490600331	27		
490357101	51	490377501	15	721425840	39		
490357801	37	490377601	25	725236651	13		
490359201	37	490377701	25	725237051	13		
490359203	37	490378101	15	725244951	15		
490359204	37	490378201	7	725244951	51		
490359311	37	490378301	7	725245351	13		
490359501	37	490378501	37	725246371	13		
490359701	7	490378601	39	731231201	25		
490359801	7	490378602	39	731231801	13		
490359902	37	490379301	9	731231801	15		
490360001	29	490379301	11	731232001	7		
490360002	29	490380403	25	732211001	17		
490360121	7	490380723	25	732211201	25		
490360601	7	490380901	25	732211601	13		
490360602	7	490381601	27	732211801	13		
490360603	7	490381801	11	732211801	15		
490360701	41	490381901	9	732212401	13		
490361501	39	490381901	11	734112401	17		
490362201	39	490382001	57	734113601	25		
490362301	39	490382501	13	734115301	43		
490362571	39	490383901	13	734115301	45		
490362623	17	490384001	13	734115301	47		
490362624	17	490384601	13	734115341	13		
490362801	37	490384602	13	734116401	13		
490362901	17	490386402	39	734116401	15		
490363001	17	490387901	9	734116401	15		
490363201	17	490387902	9	734118601	13		
490363512	7	490387903	11	735311400	13		
490363531	7	490387904	11	877525102	9		
490363601	27	490427101	11	877525102	11		
490364701	13	490442201	35				
490364703	13	490442202	33				
490365001	11	490444002	43				



461 Doughty Blvd., Inwood, L.I., N.Y. 11096-0338
Telephone: 516-371-4400
Parts and Service FAX: 516-371-4029

Sales and Administration FAX: 516-371-4204